Soft-start/quick exhaust valves MS-SV, MS series

Key features

Service unit components of the MS series

Solutions for every application

With its large product range, highly effective components and a wide choice of functions, the MS series from Festo offers a complete concept for compressed air preparation. It is suitable for simple standard applications as well as for application-specific solutions with very high quality requirements.

Available as individual components, pre-assembled combinations ex-stock, application-specific combinations or complete turnkey solutions. The five sizes in the MS series achieve maximum flow rates with low space requirements.

Freely combinable functional modules

Pressure regulators, on/off and soft-start valves with safety function, filters, pressure and flow sensors, dryers, sensors and lubricators can be assembled into a suitable solution for every task. With the modular structure the components can be combined as required. The simple connection system saves time because there is no need to disassemble the entire combination when replacing individual modules. Many of the components are also UL and ATEX certified.

CAD models and configurator

Convenient tools for planning and selecting application-specific individual components and combinations. The product configurator can be used to configure customised solutions quickly and to transfer the order data without any hassle.

Engineering tools

Selection tool for choosing the right service unit combination without oversizing, and with the right air purity class:

➔ www.festo.com/engineering/service unit

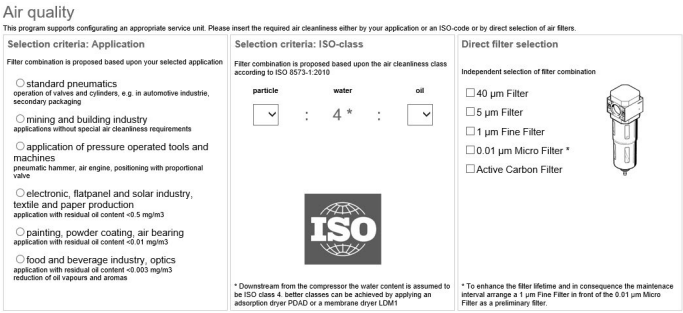

Integrated sensors

Pressure and flow sensors

- Maximum machine availability thanks to controlled processes
- Reliable compressed air preparation and system supply
- Integrated or stand-alone
- Easy to connect with M8/M12 plug

Safety functions

Soft-start/quick exhaust valves MS6-SV/MS9-SV

- Fast and reliable exhausting of systems up to Performance Level e, certified to EN ISO 13849-1
- Integrated soft-start function

Saving energy

Service unit combinations MSE6

- Fully automatic monitoring and regulation of the compressed air supply
- Compressed air automatically shut off in stand-by mode
- Detection and notification of leakages
- Condition monitoring of relevant process data

Intelligent mix of sizes

- Optimum flow rate with a size that is up to 18% smaller
- Excellent energy efficiency
- Cost-optimised combinations – save up to 30%!

Size differences

Size	MS2	MS4	MS6	MS9	MS12
Grid dimension [mm]	25	40	62	90	124
Connection sizes	M5, QS-6	G1/8, G1/4, G3/8	G1/4, G3/8, G1/2, G3/4	G1/2, G3/4, G1, G1 1/4, G1 1/2	G1, G1 1/4, G1 1/2, G2
Standard nominal flow rate qnN[1] [l/min]	350	1800	6500	20000	22000

1) Using pressure regulator MS-LR as an example

Key features

Note

Information

The next few pages provide a brief overview of the product range for the MS series service unit components.

You can find detailed information and all the technical data in the documentation for the relevant service unit component.

Accessories such as connecting plates or mounting brackets can be ordered either via the configurator or separately.

Design of a service unit combination

The order of the individual service unit components within a combination is relevant for safety and functionality. The service unit components cannot be combined in any order in the flow direction. They are subject to restrictions and rules.

The configurator for the service unit MSB is a reliable and convenient way of arranging individual service unit components and ensures compliance with the applicable rules. As a result, you get a fully assembled unit, including UL or ATEX certification, if necessary.
When combining a unit from individually configured and ordered service unit components, the points on the right must be adhered to under all circumstances.

- Regulators MS-LFR/LR/LRP/LRE are only permissible in the flow direction with the same or decreasing pressure regulation range
- Filters MS-LFR/LF/LFM/LFX are only permissible in the flow direction with an increasing grade of filtration
- Lubricators MS-LOE are not permitted in the flow direction upstream of a filter MS-LFR/LFM/LF/LFX, water separator MS-LWS or membrane air dryer MS-LDM1
- A micro filter MS-LFM must be installed in the flow direction upstream of an activated carbon filter MS-LFX or membrane air dryer MS-LDM1
- A flow sensor SFAM cannot be installed directly downstream of a regulator MS-LFR/LR; a branching module MS-FRM must be positioned between them
- A soft-start/quick exhaust valve MS-SV must be the last service unit component in the flow direction

Product range for MS series service unit components

Type	Description	Size	Pneumatic connection					
			Push-in connector	Female thread			Connecting plate with thread	
				M	G	NPT	G	NPT
Combinations								
Service unit combinations MSB-FRC								Datasheets ➔ Internet: msb
	Combinations of filter regulator and lubricator	4	–	–	1/8, 1/4	–	–	–
		6	–	–	1/4, 3/8, 1/2	–	–	–
Service unit combinations MSB								Datasheets ➔ Internet: msb
	7 combinations, predefined	4	–	–	1/4	–	–	–
		6	–	–	1/2	–	–	–
	Freely configurable combinations	4	–	–	1/8, 1/4	–	1/8, 1/4, 3/8	1/8, 1/4, 3/8
		6	–	–	1/4, 3/8, 1/2	–	1/4, 3/8, 1/2, 3/4	1/4, 3/8, 1/2, 3/4
		9	–	–	3/4, 1	3/4, 1	1/2, 3/4, 1, 1 1/4, 1 1/2	1/2, 3/4, 1, 1 1/4, 1 1/2
Service unit combinations MSE6								Datasheets ➔ Internet: mse6
	Combinations with fieldbus connection for measuring pressure, flow rate and consumption	6	–	–	–	–	1/2	–

Key features

Product range for MS series service unit components								
Type	**Description**	**Size**	**Pneumatic connection**					
			Push-in connector	**Female thread**			**Connecting plate with thread**	
				M	**G**	**NPT**	**G**	**NPT**
Individual devices								
Filter regulators MS-LFR							Datasheets ➔ Internet: ms2-lfr; ms4-lfr; ms6-lfr; ms9-lfr; ms12-lfr	
	Filter and pressure regulator in a single device, grade of filtration 5 or 40 µm	2	QS-6	M5	–	–	–	–
		4	–	–	1/8, 1/4	–	1/8, 1/4, 3/8	1/8, 1/4, 3/8
		6	–	–	1/4, 3/8, 1/2	–	1/4, 3/8, 1/2, 3/4	1/4, 3/8, 1/2, 3/4
		9	–	–	3/4, 1	3/4, 1	1/2, 3/4, 1, 1 1/4, 1 1/2	1/2, 3/4, 1, 1 1/4, 1 1/2
		12	–	–	–	–	1, 1 1/4, 1 1/2, 2	–
Filter regulators MS-LFR-B							Datasheets ➔ Internet: ms4-lfr-b; ms6-lfr-b	
	Filter and pressure regulator in a single device in polymer housing, grade of filtration 5 or 40 µm	4	–	–	1/4	–	–	–
		6	–	–	1/2	–	–	–
Filters MS-LF							Datasheets ➔ Internet: ms4-lf; ms6-lf; ms9-lf; ms12-lf	
	Grade of filtration 5 or 40 µm	4	–	–	1/8, 1/4	–	1/8, 1/4, 3/8	1/8, 1/4, 3/8
		6	–	–	1/4, 3/8, 1/2	–	1/4, 3/8, 1/2, 3/4	1/4, 3/8, 1/2, 3/4
		9	–	–	3/4, 1	3/4, 1	1/2, 3/4, 1, 1 1/4, 1 1/2	1/2, 3/4, 1, 1 1/4, 1 1/2
		12	–	–	–	–	1, 1 1/4, 1 1/2, 2	–
Fine and micro filters MS-LFM							Datasheets ➔ Internet: ms4-lfm; ms6-lfm; ms9-lfm; ms12-lfm	
	Grade of filtration 0.01 or 1 µm	4	–	–	1/8, 1/4	–	1/8, 1/4, 3/8	1/8, 1/4, 3/8
		6	–	–	1/4, 3/8, 1/2	–	1/4, 3/8, 1/2, 3/4	1/4, 3/8, 1/2, 3/4
		9	–	–	3/4, 1	3/4, 1	1/2, 3/4, 1, 1 1/4, 1 1/2	1/2, 3/4, 1, 1 1/4, 1 1/2
		12	–	–	–	–	1, 1 1/4, 1 1/2, 2	–
Activated carbon filters MS-LFX							Datasheets ➔ Internet: ms4-lfx; ms6-lfx; ms9-lfx; ms12-lfx	
	For removing liquid and gaseous oil particles	4	–	–	1/8, 1/4	–	1/8, 1/4, 3/8	1/8, 1/4, 3/8
		6	–	–	1/4, 3/8, 1/2	–	1/4, 3/8, 1/2, 3/4	1/4, 3/8, 1/2, 3/4
		9	–	–	3/4, 1	3/4, 1	1/2, 3/4, 1, 1 1/4, 1 1/2	1/2, 3/4, 1, 1 1/4, 1 1/2
		12	–	–	–	–	1, 1 1/4, 1 1/2, 2	–
Water separators MS-LWS							Datasheets ➔ Internet: ms6-lws; ms9-lws; ms12-lws	
	Remove condensate from compressed air, maintenance-free	6	–	–	1/4, 3/8, 1/2	–	1/4, 3/8, 1/2, 3/4	1/4, 3/8, 1/2, 3/4
		9	–	–	3/4, 1	3/4, 1	1/2, 3/4, 1, 1 1/4, 1 1/2	1/2, 3/4, 1, 1 1/4, 1 1/2
		12	–	–	–	–	1, 1 1/4, 1 1/2, 2	–

Key features

Product range for MS series service unit components

Type	Description	Size	Pneumatic connection					
			Push-in connector	Female thread			Connecting plate with thread	
				M	G	NPT	G	NPT
Individual devices								
Pressure regulators MS-LR								Datasheets ➔ Internet: ms2-lr; ms4-lr; ms6-lr; ms9-lr; ms12-lr
	For setting the required operating pressure, 4 pressure regulation ranges	2	QS-6	M5	–	–	–	–
		4	–	–	1/8, 1/4	–	1/8, 1/4, 3/8	1/8, 1/4, 3/8
		6	–	–	1/4, 3/8, 1/2	–	1/4, 3/8, 1/2, 3/4	1/4, 3/8, 1/2, 3/4
		9	–	–	3/4, 1	3/4, 1	1/2, 3/4, 1, 1 1/4, 1 1/2	1/2, 3/4, 1, 1 1/4, 1 1/2
		12	–	–	–	–	1, 1 1/4, 1 1/2, 2	–
Pressure regulators MS-LR-B								Datasheets ➔ Internet: ms4-lr-b; ms6-lr-b
	For setting the required operating pressure, in polymer housing	4	–	–	1/4	–	–	–
		6	–	–	1/2	–	–	–
Pressure regulators MS-LRB								Datasheets ➔ Internet: ms4-lrb; ms6-lrb
	For configuring a regulator manifold with independent pressure regulation ranges. Pressure output is to the front or rear.	4	–	–	1/4	–	1/8, 1/4, 3/8	–
		6	–	–	1/2	–	1/4, 3/8, 1/2, 3/4	–
Precision pressure regulators MS-LRP								Datasheets ➔ Internet: ms6-lrp
	For precisely setting the required operating pressure, 4 pressure regulation ranges, pressure hysteresis 0.02 bar	6	–	–	1/4, 3/8, 1/2	–	1/4, 3/8, 1/2, 3/4	1/4, 3/8, 1/2, 3/4
Precision pressure regulators MS-LRPB								Datasheets ➔ Internet: ms6-lrpb
	For configuring a regulator manifold with independent pressure regulation ranges. Pressure output is to the front or rear.	6	–	–	1/2	–	1/4, 3/8, 1/2, 3/4	–
Lubricators MS-LOE								Datasheets ➔ Internet: ms4-loe; ms6-loe; ms9-loe; ms12-loe
	Add a precisely adjustable amount of oil to the compressed air. The amount of oil mist is proportional to the compressed air flow rate.	4	–	–	1/8, 1/4	–	1/8, 1/4, 3/8	1/8, 1/4, 3/8
		6	–	–	1/4, 3/8, 1/2	–	1/4, 3/8, 1/2, 3/4	1/4, 3/8, 1/2, 3/4
		9	–	–	3/4, 1	3/4, 1	1/2, 3/4, 1, 1 1/4, 1 1/2	1/2, 3/4, 1, 1 1/4, 1 1/2
		12	–	–	–	–	1, 1 1/4, 1 1/2, 2	–

Key features

Product range for MS series service unit components

Type	Description	Size	Pneumatic connection					
			Push-in connector	Female thread			Connecting plate with thread	
				M	G	NPT	G	NPT
Individual devices								
On/off valves MS-EM							Datasheets ➔ Internet: ms4-em; ms6-em; ms9-em; ms12-em	
	Manually actuated on/off valve for pressurising and exhausting pneumatic systems.	4	–	–	1/8, 1/4	–	1/8, 1/4, 3/8	1/8, 1/4, 3/8
		6	–	–	1/4, 3/8, 1/2	–	1/4, 3/8, 1/2, 3/4	1/4, 3/8, 1/2, 3/4
		9	–	–	3/4, 1	3/4, 1	1/2, 3/4, 1, 1 1/4, 1 1/2	1/2, 3/4, 1, 1 1/4, 1 1/2
		12	–	–	–	–	1, 1 1/4, 1 1/2, 2	–
On/off valves MS-EE							Datasheets ➔ Internet: ms4-ee; ms6-ee; ms9-ee; ms12-ee	
	Electrically actuated on/off valve for pressurising and exhausting pneumatic systems.	4	–	–	1/8, 1/4	–	1/8, 1/4, 3/8	1/8, 1/4, 3/8
		6	–	–	1/4, 3/8, 1/2	–	1/4, 3/8, 1/2, 3/4	1/4, 3/8, 1/2, 3/4
		9	–	–	3/4, 1	3/4, 1	1/2, 3/4, 1, 1 1/4, 1 1/2	1/2, 3/4, 1, 1 1/4, 1 1/2
		12	–	–	–	–	1, 1 1/4, 1 1/2, 2	–
On/off valves MS-EE-B							Datasheets ➔ Internet: ms4-ee-b; ms6-ee-b	
	Electrically actuated on/off valve in polymer housing for pressurising and exhausting pneumatic systems.	4	–	–	1/4	–	–	–
		6	–	–	1/2	–	–	–
Soft-start valves MS-DL							Datasheets ➔ Internet: ms4-dl; ms6-dl; ms12-dl	
	Pneumatically actuated soft-start valve for slowly pressurising and exhausting pneumatic systems.	4	–	–	1/8, 1/4	–	1/8, 1/4, 3/8	1/8, 1/4, 3/8
		6	–	–	1/4, 3/8, 1/2	–	1/4, 3/8, 1/2, 3/4	1/4, 3/8, 1/2, 3/4
		12	–	–	–	–	1, 1 1/4, 1 1/2, 2	–
Soft-start valves MS-DE							Datasheets ➔ Internet: ms4-de; ms6-de; ms12-de	
	Electrically actuated soft-start valve for slowly pressurising and exhausting pneumatic systems.	4	–	–	1/8, 1/4	–	1/8, 1/4, 3/8	1/8, 1/4, 3/8
		6	–	–	1/4, 3/8, 1/2	–	1/4, 3/8, 1/2, 3/4	1/4, 3/8, 1/2, 3/4
		12	–	–	–	–	1, 1 1/4, 1 1/2, 2	–
On/off valves MS-EDE-B							Datasheets ➔ Internet: ms4-ede-b; ms6-ede-b	
	Electrically actuated soft-start valve in polymer housing for slowly pressurising and exhausting pneumatic systems.	4	–	–	1/4	–	–	–
		6	–	–	1/2	–	–	–
Soft-start/quick exhaust valves MS-SV							Datasheets ➔ Internet: ms6-sv; ms9-sv	
	For building up pressure gradually and reducing pressure quickly and safely in pneumatic piping systems. Up to category 1, PL c.	6	–	–	1/2	–	1/4, 3/8, 1/2, 3/4	1/4, 3/8, 1/2, 3/4
		9	–	–	3/4, 1	3/4, 1	1/2, 3/4, 1, 1 1/4, 1 1/2	1/2, 3/4, 1, 1 1/4, 1 1/2
	Up to category 3, PL d. Up to category 4, PL e in the case of optional extension.	6	–	–	1/2	–	1/4, 3/8, 1/2, 3/4	1/4, 3/8, 1/2, 3/4
	Up to category 4, PL e.	6	–	–	1/2	–	1/4, 3/8, 1/2, 3/4	–

Key features

Product range for MS series service unit components								
Type	**Description**	**Size**	**Pneumatic connection**					
			Push-in connector	**Female thread**			**Connecting plate with thread**	
				M	**G**	**NPT**	**G**	**NPT**
Individual devices								
Membrane air dryers MS-LDM1							Datasheets ➔ Internet: ms4-ldm; ms6-ldm	
	Wear-free membrane dryer with internal air consumption	4	–	–	1/8, 1/4	–	1/8, 1/4, 3/8	1/8, 1/4, 3/8
		6	–	–	1/4, 3/8, 1/2	–	1/4, 3/8, 1/2, 3/4	1/4, 3/8, 1/2, 3/4
Branching modules MS-FRM							Datasheets ➔ Internet: ms4-frm; ms6-frm; ms9-frm; ms12-frm	
	Compressed air distributors with 4 connections	4	–	–	1/8, 1/4	–	1/8, 1/4, 3/8	–
		6	–	–	1/4, 3/8, 1/2	–	1/4, 3/8, 1/2, 3/4	–
		9	–	–	3/4, 1	3/4, 1	1/2, 3/4, 1, 1 1/4, 1 1/2	1/2, 3/4, 1, 1 1/4, 1 1/2
		12	–	–	–	–	1, 1 1/4, 1 1/2, 2	–
Distributor blocks MS-FRM-FRZ							Datasheets ➔ Internet: ms4-frm-frz; ms6-frm-frz	
	Compressed air distributors with 4 connections and half the grid width	4	–	–	–	–	–	–
		6	–	–	–	–	–	–
Flow sensors SFAM							Datasheets ➔ Internet: sfam	
	For absolute flow rate information and cumulative air consumption measurement	6	–	–	–	–	1/2	1/2
		9	–	–	–	–	1, 1 1/2	1, 1 1/2

Type codes MS6-SV

001	Series	
MS	MS series	

002	Size	
6	Grid dimension 62 mm	

003	Function	
SV	Soft-start/quick exhaust valve	

004	Pneumatic connection	
1/2	Female thread G1/2	
AGB	Sub-base G1/4	
AGC	Sub-base G3/8	
AGD	Sub-base G1/2	
AGE	Sub-base G3/4	
AQN	Sub-base 1/4 NPT	
AQP	Sub-base 3/8 NPT	
AQR	Sub-base 1/2 NPT	
AQS	Sub-base 3/4 NPT	

005	Performance Level	
C	Category 1, 1-channel to ISO 13849-1	
D	Category 3, 2-channel to ISO 13849-1	
E	Category 4, 2-channel with self-monitoring to ISO 13849-1	

006	Supply voltage	
10V24P	24 V DC, 10 bar, M12 (connection pattern to IEC 61076-2-101)	
10V24	24 V DC, 10 bar, connection pattern to EN 175301	
10V24C	24 V DC, 10 bar (connection pattern to EN 175301) without manual override	
10V24D	24V DC, 10 bar, M12 (connection pattern according to IEC 61076-2-101) without manual override	
10V24E	24 V DC, 10 bar, M12 (connection pattern according to IEC 61076-2-101) without manual override on the pilot actuator. With detenting internal manual override (can only be reset via 24 V)	
10V24F	24 V DC, 10 bar, M12 (connection pattern to IEC 61076-2-101). Non-detenting manual override on the pilot actuator	
ASIS	22 V - 31.6 V DC, AS-i Safety at Work, SPEC3.0 Profile 7.5.5	

007	Connection technology	
	None	
2OE	2 SMT proximity sensors, 5 m, OE	
2M8	2 SMT proximity sensors, 0.3 m, M8	
2M12	2 SMT proximity sensors, 0.3 m, M12	

008	Extended sensing	
	None	
S3	Additional SMT proximity sensor; required to achieve Performance Level “e”; corresponds to the selected connection technology	

009	Silencer	
	None	
S	Silencer	
SO	Open silencer	

010	Pressure gauge alternatives	
	None	
A4	Adapter for EN pressure gauge 1/4, without pressure gauge	
A8	Adapter for EN pressure gauge 1/8, without pressure gauge	
AD7	Pressure sensor with switching display, M8 plug, threshold value comparator, PNP, N/O	
AD8	Pressure sensor with switching display, M8 plug, threshold value comparator, PNP, N/C	
AD9	Pressure sensor with switching display, M8 plug, window comparator, PNP, N/O	
AD10	Pressure sensor with operational status indicator, M8 plug, window comparator, PNP, N/C	
AD11	Pressure sensor with LCD display, M12 plug, 4-pin, IO-Link®, PNP, NPN, 0...10 V, 1...5 V, 4...20 mA	
AD12	Pressure sensor with LCD display, M8 plug, 4-pin, IO-Link®, PNP, NPN, 0...10 V, 1...5 V, 4...20 mA	
AG	MS pressure gauge	
RG	Integrated pressure gauge, red/green scale	

011	Alternative pressure gauge scale	
	MS pressure gauge	
PSI	psi	
MPA	MPa	

012	Multi-pin plug socket	
	None	
MP1	Multi-pin plug socket, Sub-D, 9-pin, screw terminal, without cable, static enable signals (EN1 = 24 V, EN2 = 24 V)	
MP3	Multi-pin plug socket, Sub-D, 9-pin, screw terminal, without cable, static enable signals (EN1 = 0 V, EN2 = 24 V), cross-circuit detection possible	
MP5	Multi-pin plug socket, Sub-D, 9-pin, screw terminal, without cable, enable signals static (EN1=0 V, EN2=24 V), galvanic isolation of the enable signals from the supply voltage	

013	Type of mounting	
	Without mounting bracket	
WP	Mounting bracket basic design	
WPB	Mounting bracket for large wall gap	
WPM	Mounting bracket for hooking in service unit components	
WB	Mounting centrally at rear (wall mounting top and bottom), connecting plates not required	

014	Tamper protection	
	None	
MK	Full	

015	UL certification	
	None	
UL1	cULus ordinary location for Canada and USA	

016	Flow direction	
	Flow direction from left to right	
Z	Flow direction from right to left	

Peripherals overview MS6-SV-C

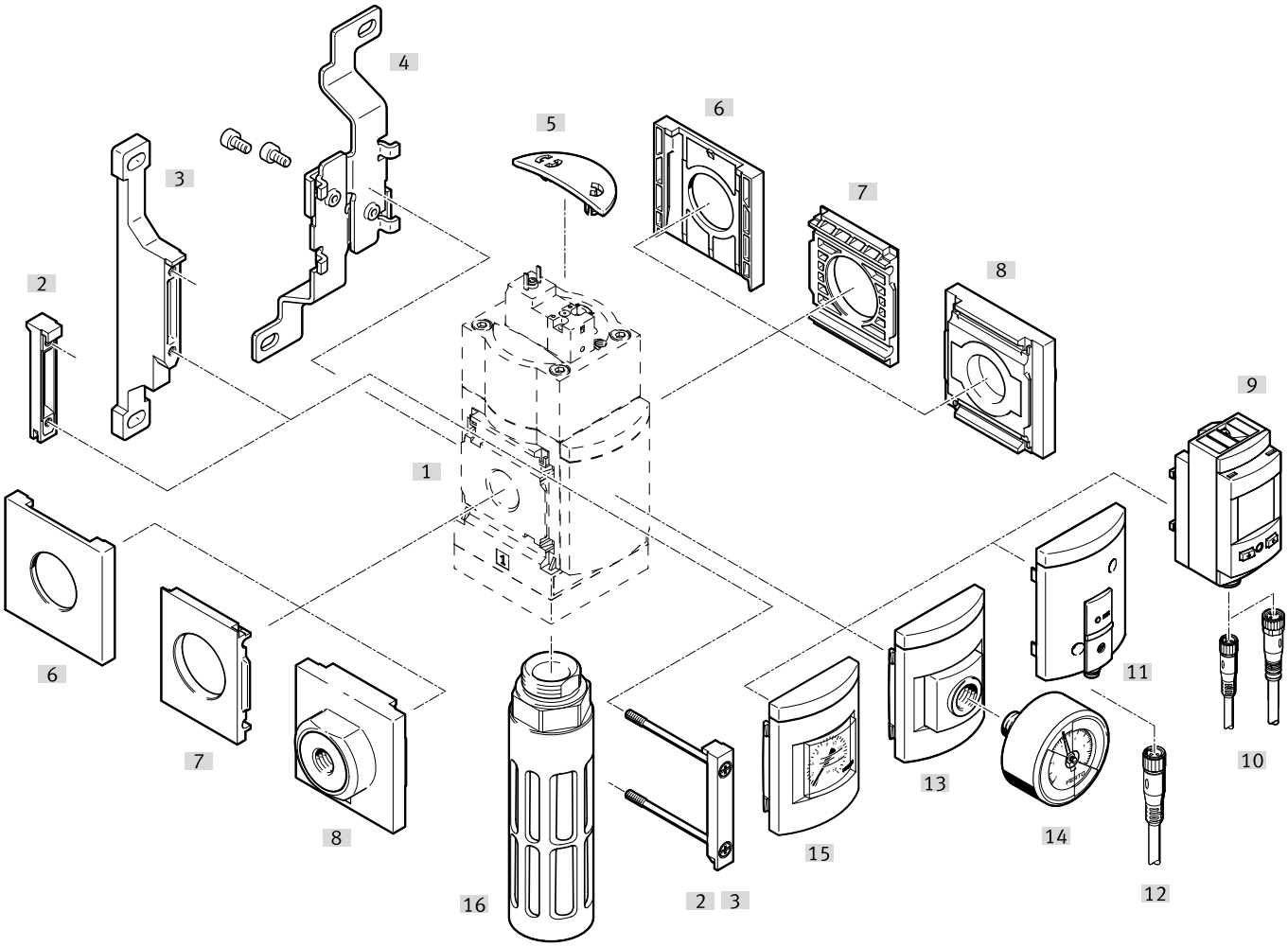

Mounting attachments and accessories			Single device		Combination		→ Page/Internet
			Without connecting plate	With connecting plate	Without connecting plate	With connecting plate	
[1]	MS6-SV-C	Soft-start/quick exhaust valve	■	■	■	■	11
[2]	MS6-MV	Module connector	–	■	■	■	ms6-mv
[3]	MS6-WP, MS6-WPB, MS6-WPE, MS6-WPM	Mounting bracket	■	■	■	■	ms6-wp
[4]	MS6-WB	Mounting bracket	■	■	–	–	ms6-wb
[5]	MS6-SV-C-MK	Covering	■	■	■	■	52
[6]	MS6-END	Cover cap	–	–	■	–	ms6-end
[7]	MS6-AEND	Mounting plate	■[1]	–	■[1]	–	ms6-aend
[8]	MS6-AG...	Connecting plate SET	–	■[1]	–	■[1]	ms6-ag
	MS6-AQ...	Connecting plate SET	–	■[1]	–	■[1]	ms6-aq
[9]	AD11 ... AD12	Pressure sensor SPAU with LCD display	■	■	■	■	17
[10]	NEBA-M8...-LE4/NEBA-M12...-LE4	Connecting cable	■	■	■	■	54
[11]	AD7 ... AD10	Pressure sensor SDE5 with status indicator	■	■	■	■	17
[12]	NEBA-M8...-LE3	Connecting cable	■	■	■	■	54
[13]	A4	Adapter for EN pressure gauge 1/4	■	■	■	■	17
[14]	MA	Pressure gauge	■	■	■	■	54
[15]	AG, RG	MS pressure gauge	■	■	■	■	17
[16]	U-3/4-B	Silencer	■	■	■	■	53

1) Module connector MS6-MV [2] or mounting bracket MS6-WP, MS6-WPB, MS6-WPE, MS6-WPM [3] is required for mounting.

Peripherals overview MS6-SV-C

Supply voltage
Code: 10V24, 10V24C

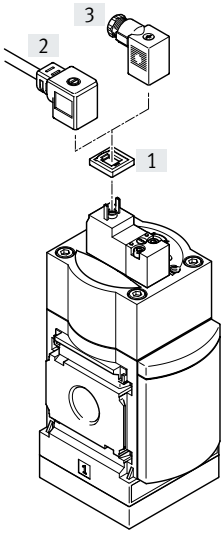

Supply voltage
Code: 10V24D, 10V24E, 10V24F, 10V24P

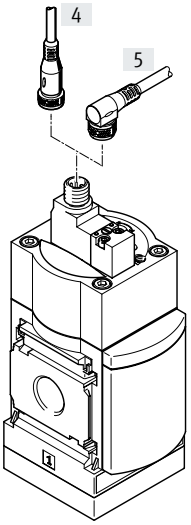

Note

Additional accessories:

- Module connector for combination with size MS4, MS6 or size MS9
  ➔ Internet: amv rmv
- Adapter for mounting on profiles
  ➔ Internet: ipm

Mounting attachments and accessories

			Single device		Combination		➔ Page/Internet
			Without connecting plate	With connecting plate	Without connecting plate	With connecting plate	
[1]	MEB-LD	Illuminating seal	■	■	■	■	54
[2]	KMEB	Plug socket with cable	■	■	■	■	53
[3]	MSSD-EB	Plug socket	■	■	■	■	53
[4]	NEBA-M12G5	Connecting cable	■	■	■	■	54
[5]	NEBA-M12W5	Connecting cable	■	■	■	■	54

Datasheet MS6-SV-C

MS6-SV-...-10V24, 10V24F, 10V24P

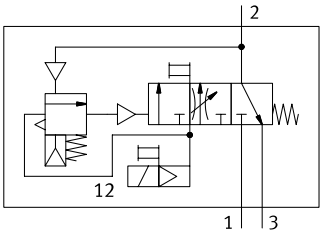

Flow rate
5700 l/min

Temperature range
0 ... +60°C

Operating pressure
3 ... 10 bar

www.festo.com

MS6-SV-...-10V24C, 10V24D

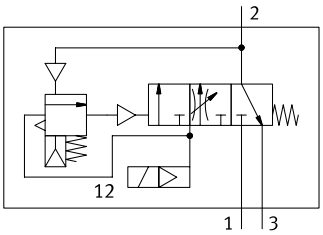

MS6-SV-...-10V24E

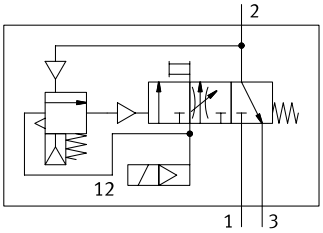

Electropneumatic soft-start/quick exhaust valve for gradual pressurisation and quick exhaust of system components (single channel).
The main restrictor in the cover permits a slow build-up of the output pressure p2. Once the output pressure p2 has reached the set pressure switchover point (switching pressure), the valve opens and the full operating pressure p1 is available at the output

- Suitable for applications with a high flow rate in restricted spaces with medium safety requirements up to controller category 1, Performance Level c
- High volumetric flow rate for pressurisation and exhaust
- The filling flow rate can be set for slowly building up the pressure using a restrictor
- Adjustable pressure switchover point
- Optional pressure sensor
- Optional cover as tamper protection for the control parts

Safety data	
Conforms to	EN ISO 13849-1
Safety function	Exhausting
	Prevention of unexpected start-up (pressurisation)
Performance Level (PL)	Exhausting: up to category 1, PL c
	Prevention of unexpected start-up (pressurisation): up to category 1, PL c
Note on forced checking procedure	Switching frequency min. 1/month
Shock resistance	Shock test with severity level 2 to FN 942017-5 and EN 60068-2-27
Vibration resistance	Transport application test with severity level 2 to FN 942017-4 and EN 60068-2-6

Note

The mechanical system is not tested in the controlled (i.e. pressurised) state.

Forced switch on/off: switching frequency should be at least once a month.

If the process-related switching frequency (safe exhausting) is less than once a month,

the machine operator must carry out a forced switch off.

Datasheet MS6-SV-C

General technical data		
Pneumatic connection 1, 2		
	Female thread	G1/2
	Connecting plate AG...	G1/4, G3/8, G1/2 or G3/4
	Connecting plate AQ...	1/4 NPT, 3/8 NPT, 1/2 NPT or 3/4 NPT
Pneumatic connection 3		G3/4
Actuation type		Electrical
Design		Piston spool
Lap		Overlap
Type of mounting		With accessories
		In-line installation
Mounting position		Any
Pressure indication		With pressure sensor for indicating the output pressure via LCD display and electrical output
		With pressure sensor for indicating the output pressure and electrical output via LCD display
		With pressure gauge for displaying the output pressure
		With pressure gauge with red/green scale for indicating the output pressure
		Prepared for G1/4
Valve function		3/2-way valve, closed, single solenoid
		Soft-start function, adjustable
Non-overlapping		Yes
Exhaust air function		Cannot be throttled
Manual override	10V24, 10V24F	At the pilot solenoid valve: non-detenting At the soft-start/quick exhaust valve: detenting, self-resetting
	10V24E	At the pilot solenoid valve: none At the soft-start/quick exhaust valve: detenting, self-resetting
	10V24P	At the pilot solenoid valve: non-detenting/detenting At the soft-start/quick exhaust valve: detenting, self-resetting
	10V24C, 10V24D	None
Reset method		Mechanical spring
Type of actuation		Piloted
Pilot air supply		Internal
Sealing principle		Soft

Note: This product conforms to ISO 1179-1 and ISO 228-1.

Characteristic flow rate values	
Pneumatic connection	Female thread G1/2
Standard nominal flow rate qnN[1] [l/min]	
In main flow direction 1 → 2	5700
Standard flow rate qN [l/min], p2 = 6 bar	
In exhaust direction 2 → 3	7600[2]
C value [l/s*min]	
In main flow direction 1 → 2	23.2
b value	
In main flow direction 1 → 2	0.4

1) Measured at p1 = 6 bar and p2 = 5 bar, Δp = 1 bar
2) Measured with reference to atmosphere with silencer S.

Datasheet MS6-SV-C

Electrical data		
Characteristic coil data	10V24, 10V24P	24 V DC: 1.8 W; permissible voltage fluctuations –10%/+10%
	10V24C, 10V24D, 10V24E, 10V24F	24 V DC: 1.8 W; permissible voltage fluctuations –15%/+10%
Electrical connection	10V24, 10V24C	Plug, 2-pin, to EN 175301-803, type C
	10V24D, 10V24E, 10V24F, 10V24P	M12x1 to ISO 20401 in line with EN 61076-2-101
Degree of protection		IP65 with plug socket
Duty cycle	[%]	100
Switching time off	[ms]	65
Switching time on	[ms]	370

Operating and environmental conditions		
Operating pressure	[bar]	3 ... 10
Operating medium		Compressed air to ISO 8573-1:2010 [7:4:4]
Note on the operating/pilot medium		Lubricated operation possible (in which case lubrication will always be required)
Ambient temperature	[°C]	0 ... +60 (0 ... +50)[1]
Temperature of medium	[°C]	0 ... +60 (0 ... +50)[1]
Storage temperature	[°C]	–10 ... +60 (0 ... +50)[1]
Corrosion resistance class CRC[2]		2
CE marking (see declaration of conformity)[3]		To EU EMC Directive
		To EU Machinery Directive
		To EU RoHS Directive
UKCA marking (see declaration of conformity)[3]		To UK instructions for EMC
		To UK instructions for machines
		To UK RoHS instructions
Food-safe[3]		See supplementary material information (except for solenoid valve)

1) With pressure sensor AD...
2) More information: www.festo.com/x/topic/crc
3) More information: www.festo.com/catalogue/ms-sv → Support/Downloads.

Weight [g]	
Soft-start/quick exhaust valve	886
Soft-start/quick exhaust valve with silencer S	1006

Materials	
Housing	Die-cast aluminium
Piston rod	High-alloy stainless steel
Seals	NBR
Note on materials	RoHS-compliant
LABS (PWIS) conformity	VDMA24364-B1/B2-L

Adjusting elements

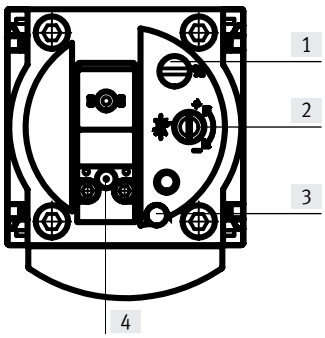

[1] Screw for adjusting the pressure switchover point

[2] Flow control screw for adjusting the filling time

[3] Manual override at the soft-start/quick exhaust valve:
- detenting, self-resetting as soon as the solenoid coil or manual override on the pilot solenoid valve is actuated (with 10V24, 10V24E, 10V24F, 10V24P)
- none (with 10V24C, 10V24D)

[4] Manual override at the pilot solenoid valve:
- non-detenting, actuation from above (with 10V24/10V24F)
- non-detenting/detenting, actuation from above (with 10V24P)
- none (with 10V24C, 10V24D, 10V24E)

Datasheet MS6-SV-C

Dimensions – Basic version Download CAD data ➔ www.festo.com

With female thread 1/2, with cover plate

Supply voltage
10V24, 10V24C

Supply voltage
10V24D, 10V24E, 10V24F,
10V24P

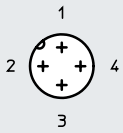

1 = not assigned
2 = not assigned
3 = com (–)
4 = Signal (+) solenoid 14

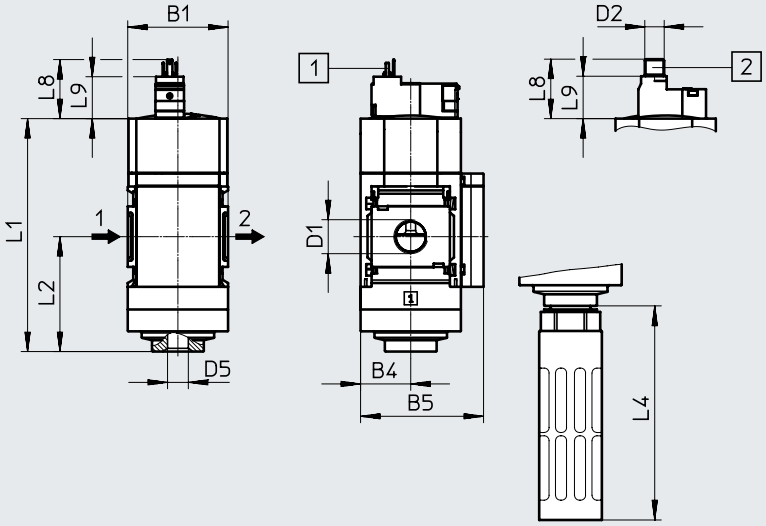

With silencer S

[1] Plug connection to EN 175301-803
[2] Electrical connection M12x1 to ISO 20401 in line with EN 61076-2-101, 4-pin version for connecting cable NEBA-M12
➔ Flow direction

Type	B1	B4	B5	D1	D2	D5	L1	L2	L4
MS6-SV-C	62	31	76	G1/2	M12x1	G3/4	144	71	128

Type	L8		L9	
	10V24, 10V24C	10V24D, 10V24E, 10V24F, 10V24P	10V24, 10V24C	10V24D, 10V24E, 10V24F, 10V24P
MS6-SV-C	33	37	24	26

Note: This product conforms to ISO 1179-1 and ISO 228-1.

Dimensions – Pressure gauges/pressure gauge alternatives Download CAD data ➔ www.festo.com

Integrated MS pressure gauge with standard scale AG or red/green scale RG, display unit [bar]

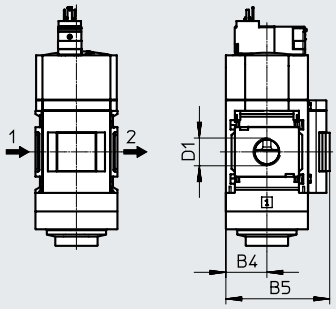

➔ Flow direction

Adapter A4 for EN pressure gauge 1/4, without pressure gauge

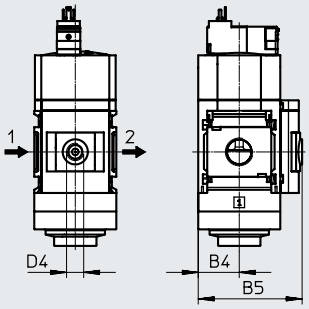

➔ Flow direction

Type	B4	B5	D4
MS6-SV-...-AG	31	77	–
MS6-SV-...-RG	31	78.5	–
MS6-SV-...-A4	31	78.5	G1/4

Note: This product conforms to ISO 1179-1 and ISO 228-1.

Datasheet MS6-SV-C

Dimensions – Pressure sensor

Download CAD data ➔ www.festo.com

Pressure sensor with switching status indicator AD7 ... AD10

Datasheets ➔ Internet: sde5

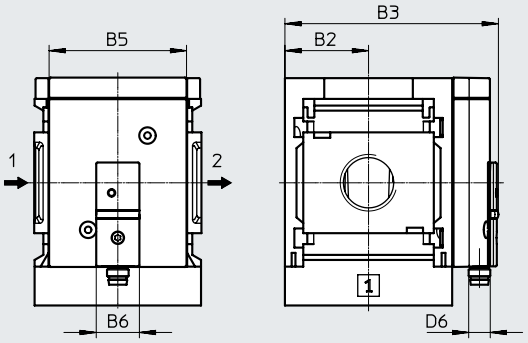

[AD7]:
SDE5-D10-O-...-P-M8 with 3-pin plug M8x1, threshold value comparator, 1 switching output PNP, N/O contact

[AD8]:
SDE5-D10-C-...-P-M8 with 3-pin plug M8x1, threshold value comparator, 1 switching output PNP, N/C contact

[AD9]:
SDE5-D10-O3-...-P-M8 with 3-pin plug M8x1, window comparator, 1 switching output PNP, N/O contact

[AD10]:
SDE5-D10-C3-...-P-M8 with 3-pin plug M8x1, window comparator, 1 switching output PNP, N/C contact

Pressure sensor with LCD display AD11 ... AD12

Datasheets ➔ Internet: spau

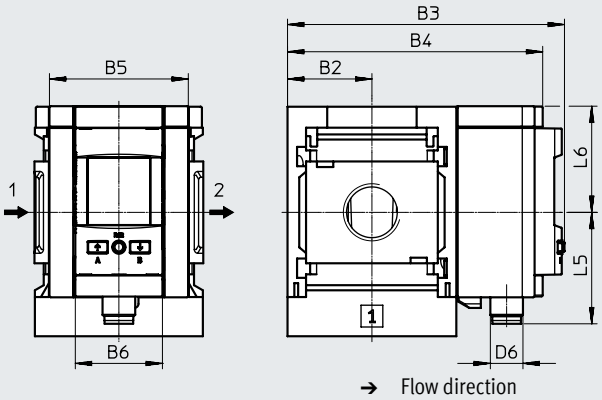

[AD11]:
SPAU-P10R-MS...-L-PNLK-M12D with 4-pin plug M12x1, A-coded, switching output 2x PNP or 2x NPN switchable and 0 ... 10 V, 1 ... 5 V, 4 ... 20 mA analogue

[AD12]:
SPAU-P10R-MS...-L-PNLK-M8D with 4-pin plug M8x1, A-coded, switching output 2x PNP or 2x NPN switchable and 0 ... 10 V, 1 ... 5 V, 4 ... 20 mA analogue

Type	B2	B3	B4	B5	B6	D6	L5	L6
MS6-SV-...-AD7, AD8, AD9, AD10	31	79.1	–	51	16	M8x1	–	–
MS6-SV-...-AD11	31	101.8	93.7	51	32	M12x1	41.2	39
MS6-SV-...-AD12						M8x1	37.9	

Note: This product conforms to ISO 1179-1 and ISO 228-1.

Ordering data

Size	Connection	Without silencer		With silencer	
		Part no.	Type	Part no.	Type
Without pressure gauge					
MS6	G1/2	**589481**	**MS6-SV-1/2-C-10V24**	**8001469**	**MS6-SV-1/2-C-10V24-S**
		589250	**MS6-SV-1/2-C-10V24P**	**578769**	**MS6-SV-1/2-C-10V24P-S**
Pressure sensor with switching display					
MS6	G1/2	**–**		**8172785**	**MS6-SV-1/2-C-10V24-S-AD7**
		–		**611243**	**MS6-SV-1/2-C-10V24P-S-AD7**

Ordering data – Modular product system MS6-SV-C

Ordering table Grid dimension [mm]	62	Conditions	Code		Enter code
Module no.	**548713**				
Series	Standard		**MS**		MS
Size	6		**6**		6
Function	Soft-start/quick exhaust valve		**-SV**		-SV
Pneumatic connection	Female thread G1/2		**-1/2**		
	Connecting plate G1/4		**-AGB**		
	Connecting plate G3/8		**-AGC**		
	Connecting plate G1/2		**-AGD**		
	Connecting plate G3/4		**-AGE**		
	Connecting plate 1/4 NPT		**-AQN**		
	Connecting plate 3/8 NPT		**-AQP**		
	Connecting plate 1/2 NPT		**-AQR**		
	Connecting plate 3/4 NPT		**-AQS**		
Performance Level	Category 1, single-channel, to EN ISO 13849-1		**-C**		-C
Supply voltage	24 V DC (plug pattern to EN 175301), 3 ... 10 bar, Manual override • At the soft-start/quick exhaust valve: detenting, self-resetting • At the pilot solenoid valve: non-detenting		**-10V24**		
	24 V DC (plug pattern to EN 175301), 3 ... 10 bar, no manual override		**-10V24C**		
	24 V DC, M12x1 to ISO 20401 in line with EN 61076-2-101, 3 ... 10 bar, no manual override		**-10V24D**		
	24 V DC, M12x1 to ISO 20401 in line with EN 61076-2-101, 3 ... 10 bar, Manual override • At the soft-start/quick exhaust valve: detenting, self-resetting • At the pilot solenoid valve: none		**-10V24E**		
	24 V DC, M12x1 to ISO 20401 in line with EN 61076-2-101, 3 ... 10 bar, Manual override • At the soft-start/quick exhaust valve: detenting, self-resetting • At the pilot solenoid valve: non-detenting		**-10V24F**		
	24 V DC, M12x1 to ISO 20401 in line with EN 61076-2-101, 3 ... 10 bar, Manual override • At the soft-start/quick exhaust valve: detenting, self-resetting • At the pilot solenoid valve: non-detenting/detenting		**-10V24P**		

Ordering data – Modular product system MS6-SV-C

Ordering table

Grid dimension [mm]	62	Conditions	Code		Enter code
Silencer	Silencer		**-S**		
Pressure gauge/pressure gauge alternatives	MS pressure gauge	[1]	**-AG**		
	Adapter for EN pressure gauge 1/4, without pressure gauge		**-A4**		
	Integrated pressure gauge, red/green scale	[1]	**-RG**		
	Pressure sensor SDE5 with switching status indicator, plug M8, threshold value comparator, PNP, N/O	[2]	**-AD7**		
	Pressure sensor SDE5 with switching status indicator, M8 plug, threshold value comparator, PNP, N/C	[2]	**-AD8**		
	Pressure sensor SDE5 with switching status indicator, plug M8, window comparator, PNP, N/O	[2]	**-AD9**		
	Pressure sensor SDE5 with switching status indicator, plug M8, window comparator, PNP, N/C	[2]	**-AD10**		
	Pressure sensor SPAU with LCD display, M12 plug, 4-pin, IO-Link®, PNP, NPN, 0 ... 10 V, 1 ... 5 V, 4 ... 20 mA	[2]	**-AD11**		
	Pressure sensor SPAU with LCD display, M8 plug, 4-pin, IO-Link®, PNP, NPN, 0 ... 10 V, 1 ... 5 V, 4 ... 20 mA	[2]	**-AD12**		
Alternative pressure gauge scale	psi	[3]	**-PSI**		
	MPa	[4]	**-MPA**		
Type of mounting	Mounting bracket standard design		**-WP**		
	Mounting bracket for hooking in service unit components	[5]	**-WPM**		
	Mounting bracket for large wall gap		**-WPB**		
	Mounting bracket centrally at rear (wall mounting top and bottom), connecting plates not required		**-WB**		
Tamper protection	Complete (manual override at soft-start/quick exhaust valve blocked, setting screws blocked, manual override at pilot solenoid valve blocked)		**-MK**		
Flow direction	Flow direction from right to left		**-Z**		

[1] **AG, RG** Pressure gauge scale in bar
[2] **AD7** ... **AD12** Measuring range max. 10 bar
[3] **PSI** Only in combination with pressure gauge AG
[4] **MPA** Only in combination with pressure gauge AG or RG
[5] **WPM** Only with connecting plate AGB, AGC, AGD, AGE, AQN, AQP, AQR or AQS

Peripherals overview MS6-SV-D

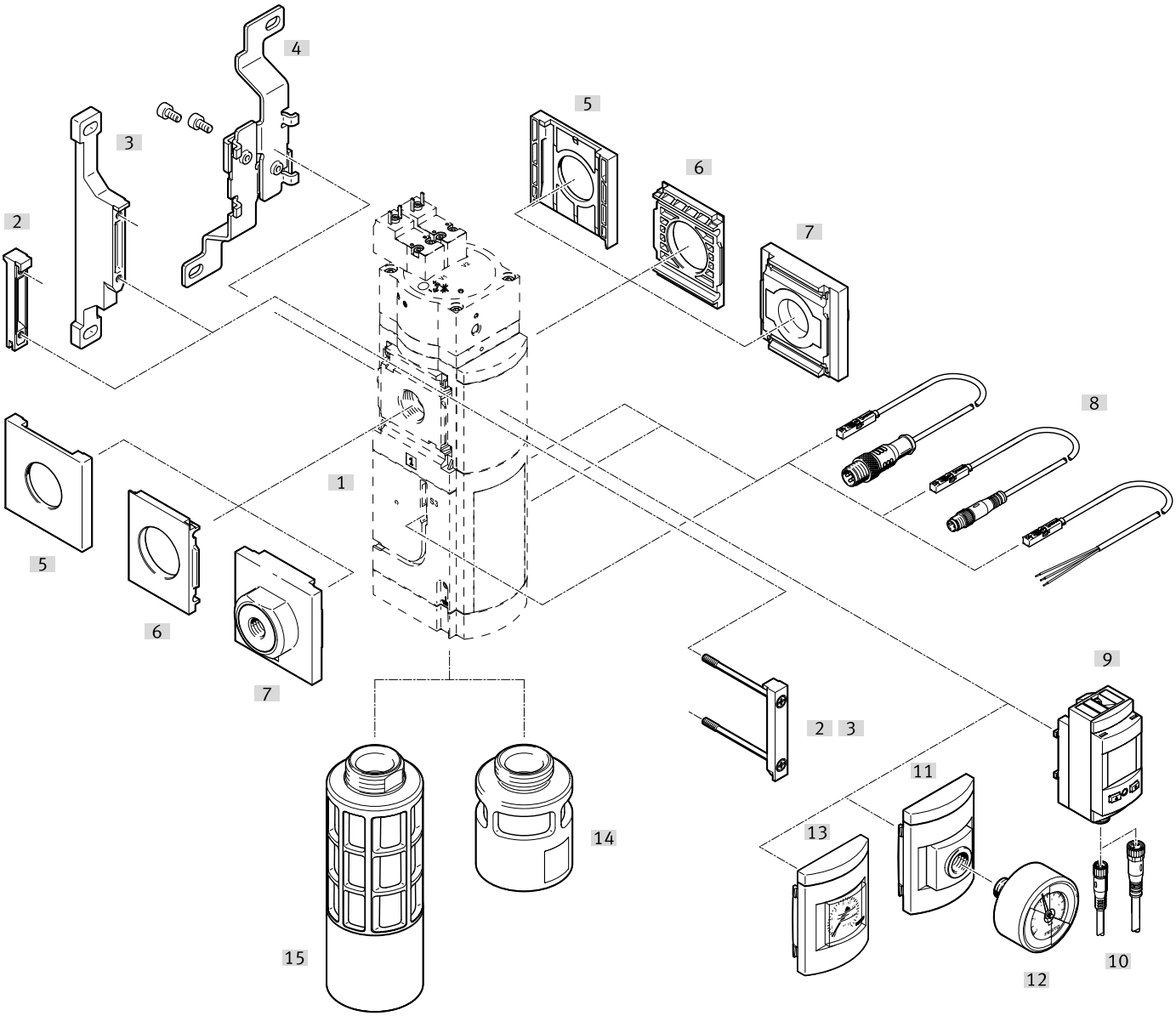

Supply voltage
Code: 10V24

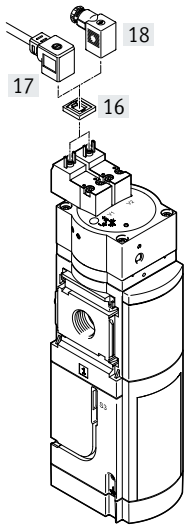

Supply voltage
Code: 10V24P

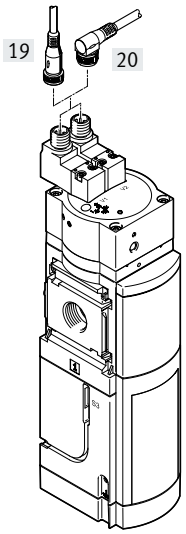

Note

Additional accessories:

- Module connector for combination with size MS4/MS6 or size MS9
  ➔ Internet: amv rmv
- Adapter for mounting on profiles
  ➔ Internet: ipm

Peripherals overview MS6-SV-D

Mounting attachments and accessories			Single device		Combination		→ Page/Internet
			Without connecting plate	With connecting plate	Without connecting plate	With connecting plate	
[1]	MS6-SV-D	Soft-start/quick exhaust valve	■	■	■	■	20
[2]	MS6-MV	Module connector	–	■	■	■	ms6-mv
[3]	MS6-WP	Mounting bracket	■	■	■	■	ms6-wp
	MS6-WPB/WPE/WPM	Mounting bracket (not shown)	■	■	■	■	ms6-wp
[4]	MS6-WB	Mounting bracket	■	■	–	–	ms6-wb
[5]	MS6-END	Cover cap	–	–	■	–	ms6-end
[6]	MS6-AEND	Mounting plate	■[1]	–	■[1]	–	ms6-aend
[7]	MS6-AG...	Connecting plate SET	–	■[1]	–	■[1]	ms6-ag
	MS6-AQ...	Connecting plate SET	–	■[1]	–	■[1]	ms6-aq
[8]	2M8/S3, SMT-8M-A-...-M8D	Proximity switch	■	■	■	■	29, 53
	2M12/S3, SMT-8M-A-...-M12	Proximity switch	■	■	■	■	29, 53
	2OE/S3, SMT-8M-A-...-OE	Proximity switch	■	■	■	■	29, 53
[9]	AD11 ... AD12	Pressure sensor SPAU with LCD display	■	■	■	■	17
[10]	NEBA-M8...-LE4/NEBA-M12...-LE4	Connecting cable	■	■	■	■	54
[11]	A4	Adapter for EN pressure gauge 1/4	■	■	■	■	29
[12]	MA	Pressure gauge	■	■	■	■	54
[13]	AG/RG	MS pressure gauge	■	■	■	■	29
[14]	UOS-1-LF	Silencer	■	■	■	■	51
[15]	SO, UOS-1	Silencer	■	■	■	■	51
[16]	MEB-LD	Illuminating seal	■	■	■	■	54
[17]	KMEB	Plug socket with cable	■	■	■	■	53
[18]	MSSD-EB	Plug socket	■	■	■	■	53
[19]	NEBA-M12G5	Connecting cable	■	■	■	■	54
[20]	NEBA-M12W5	Connecting cable	■	■	■	■	54

1) Module connector MS6-MV [2] or mounting bracket MS6-WP/WPB/WPE/WPM [3] is required for mounting.

Datasheet MS6-SV-D

Function

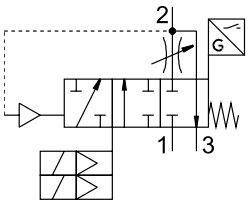

Flow rate
4300 l/min

Temperature range
–10 ... +50°C

Operating pressure
3.5 ... 10 bar

www.festo.com

The electropneumatic soft-start/quick exhaust valve is used to reduce pressure quickly and safely and to build up pressure gradually in industrial pneumatic piping systems and terminal equipment.
The MS6-SV-D has two safety functions:

- Safe exhausting
- Protection against unexpected start-up

The MS6-SV-D has a 2-channel design, i.e. it has two internal 2-way valves which can be controlled separately by pilot valves (V1 and V2) on the cover.

The directional control valves are actuated when both coils are energised simultaneously; this moves the MS6-SV-D from the normal position into the switching position. The output pressure p2 rises slowly according to the flow control setting. The main seat opens when the switch-through pressure is reached. The normal position is achieved by switching off both coils.
Two proximity switches (S1 and S2) attached to the housing monitor the directional control valves. A further proximity switch (S3) can optionally be added to monitor the soft-start valve.

- Conforms to standard IEC 61508
- Switching time delay can be adjusted using a restrictor for slowly building up the pressure; main seat opens at approx. 50% of the operating pressure
- Optional pressure sensor

The MS6-SV-D can achieve various categories and safety levels to EN ISO 13849-1 depending on whether the directional control valves are monitored.
When it is integrated appropriately in the control chain and the signals for initial position sensing are correctly linked with the control signals (plausibility checking)

- S1 and S2 Performance Level d / Category 3 to EN ISO 13849-1 and EN ISO 13849-2

Note

To avoid back pressures, it is recommended that the device is operated with the silencer UOS-1. The silencer can be ordered via the modular product system (SO ➔ page 29) or as an accessory (UOS-1 ➔ page 51).

- S1, S2 and S3 Performance Level e / Category 4 to EN ISO 13849-1 and EN ISO 13849-2

are reached.

Note

Only devices that do not impair the pneumatic protective measure – safe exhausting – may be placed downstream of the MS6-SV-...-D.
The MS6-SV-...-D is not approved for use as a press safety valve.

Datasheet MS6-SV-D

Safety data		
Conforms to		EN ISO 13849-1 and EN ISO 13849-2
Safety function		Exhausting
		Prevention of unexpected start-up (pressurisation)
Performance Level (PL)	With sensing by S1 and S2	Exhausting: category 3, PL d or category 3, PL e[1)]
		Prevention of unexpected start-up (pressurisation): category 3, PL d or category 3, PL e[1)]
	With sensing by S1, S2 and S3	Exhausting: category 4, PL e
		Prevention of unexpected start-up (pressurisation): category 4, PL e
Safety integrity level (SIL)		Exhausting: SIL 3
		Prevention of unexpected start-up (pressurisation): SIL 3
Note on forced checking procedure		Switching frequency min. 1/month
Shock resistance		Shock test with severity level 2 to FN 942017-5 and EN 60068-2-27
Vibration resistance		Transport application test with severity level 2 to FN 942017-4 and EN 60068-2-6

1) Depending on the average number of actuations per year (n_{op}).

Note

The mechanical system is not tested in the controlled (i.e. pressurised) state.

Forced switch on/off: switching frequency should be at least once a month.

If the process-related switching frequency (safe exhausting) is less than once a month,

the machine operator must carry out a forced switch off.

Datasheet MS6-SV-D

Switching logic

	Voltage at the Pilot valve		Switching position Proximity switch			Status
	V1	V2	S1	S2	S3	
Pilot valves V1 and V2 are not actuated in the normal position (MS6-SV-D completely exhausted). If both pilot valves are actuated, the MS6-SV-D switches first into switching position 1 and then, when the switch-through pressure is reached, automatically into switching position 2.	0 V	0 V	1	1	1	**Normal position** Pneumatic connection 1 blocked, passage from pneumatic connection 2 to 3 open
	24 V	0 V	0	1	1	**Normal position** Pneumatic connection 1 blocked, passage from pneumatic connection 2 to 3 open
	0 V	24 V	1	0	1	**Normal position** Reduced flow through the restrictor from pneumatic connection 1 to 2, passage from pneumatic connection 2 to 3 open
	24 V	24 V	0	0	1	**Switching position 1** Reduced flow through the restrictor from pneumatic connection 1 to 2, passage from pneumatic connection 2 to 3 blocked
	24 V	24 V	0	0	0	**Switching position 2** Full flow from pneumatic connection 1 to 2, passage from pneumatic connection 2 to 3 blocked

Proximity switch reaction times[1)]

Proximity switch	Switching on	Switching off
S1	Edge change max. 4 s after voltage signal at V1.	Edge change max. 4 s after voltage drop at V1.
S2	Edge change max. 4 s after voltage signal at V2.	Edge change max. 4 s after voltage drop at V2.
S3	Edge change after voltage signal at V1 and V2. Dependent on operating pressure p1, flow control valve position and system volume p2	Edge change max. 5 s after voltage drop at V1 and V2. Depending on system volume at p2.

1) Bounce can occur when the proximity switches undergo an edge change. This bounce can be ignored by taking the reaction times into account.
The maximum specified reaction times must be taken into account in the diagnostics. The reaction times are normally shorter.

Sample circuit

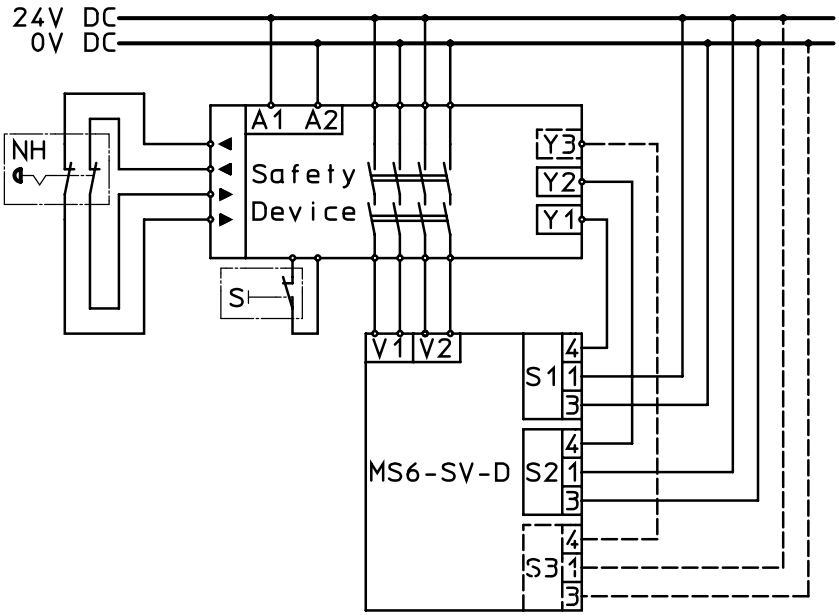

A1, A2:
Supply voltage
S1: Proximity switch S1
S2: Proximity switch S2
S3: Proximity switch S3
NH: Emergency stop (input circuit)
Safety device:
Safety relay unit or safety PLC
V1: Coil connection, pilot valve V1
V2: Coil connection, pilot valve V2
Y1: Diagnostic input 1
Y2: Diagnostic input 2
Y3: Diagnostic input 3
S: Monitored start (start circuit)

Datasheet MS6-SV-D

General technical data	
Pneumatic connection 1, 2	
Female thread	G1/2
Connecting plate AG...	G1/4, G3/8, G1/2 or G3/4
Connecting plate AQ...	1/4 NPT, 3/8 NPT, 1/2 NPT or 3/4 NPT
Pneumatic connection 3	G1
Actuation type	Electrical
Design	Piston seat
Lap	Underlap
Type of mounting	With accessories
	In-line installation
Mounting position	Any
Pressure indication	With pressure sensor for indicating the output pressure via LCD display and electrical output
	With pressure gauge for displaying the output pressure
	With pressure gauge with red/green scale for indicating the output pressure
	Prepared for G1/4
Position sensing principle	Magnetic piston principle
Valve function	3/2-way valve, closed, single solenoid
	Soft-start function, adjustable
Non-overlapping	No
Exhaust air function	Cannot be throttled
Manual override	None
Reset method	Mechanical spring
Type of actuation	Piloted
Pilot air supply	Internal
Sealing principle	Soft

Note: This product conforms to ISO 1179-1 and ISO 228-1.

Characteristic flow rate values	
Pneumatic connection	Female thread G1/2
Standard nominal flow rate qnN[1] [l/min]	
In main flow direction 1 → 2	4300
Standard flow rate qN [l/min], p2 = 6 bar	
In exhaust direction 2 → 3	9000[2]
C value [l/s*min]	
In main flow direction 1 → 2	19.3
b value	
In main flow direction 1 → 2	0.21

1) Measured at p1 = 6 bar and p2 = 5 bar, Δp = 1 bar
2) Measured with reference to atmosphere with silencer UOS-1.

Datasheet MS6-SV-D

Electrical data			
Pilot valve			
Characteristic coil data			24 V DC: 1.8 W; permissible voltage fluctuations –15%/+10%
Electrical connection	10V24		2x plug, 2-pin, to EN 175301-803, type C
	10V24P		2x M12x1 to ISO 20401 in line with EN 61076-2-101
Degree of protection			IP65 with plug socket
Duty cycle		[%]	100
Max. switching frequency		[Hz]	0.5
Switching time off		[ms]	40
Switching time on		[ms]	130
Proximity switch			
Nominal operating voltage		[V DC]	24
Proximity switch electrical connection	2M8		2 x cables with M8x1 plug, 3-pin, rotatable thread, cable length 0.3 m
	2M12		2 x cables with M12x1 plug, 3-pin, rotatable thread, cable length 0.3 m
	2OE		2x cable with open end, 3-core, cable length 5 m
	2M8 + S3		3 x cables with M8x1 plug, 3-pin, rotatable thread, cable length 0.3 m
	2M12 + S3		3 x cables with M12x1 plug, 3-pin, rotatable thread, cable length 0.3 m
	2OE + S3		3x cable with open end, 3-core, cable length 5 m
Switching element function			N/O
Measuring principle			Magneto-resistive
Signal status indication			LED and switching outputs
Switching output			PNP

Operating and environmental conditions		
Operating pressure	[bar]	3.5 ... 10
Operating medium		Compressed air to ISO 8573-1:2010 [7:4:4]
Note on the operating/pilot medium		Lubricated operation possible (in which case lubrication will always be required)
Ambient temperature	[°C]	–10 ... +50 (0 ... +50)[1]
Temperature of medium	[°C]	–10 ... +50 (0 ... +50)[1]
Storage temperature	[°C]	–10 ... +50 (0 ... +50)[1]
Corrosion resistance class CRC[2]		2
Noise level	[dB(A)]	75 (with silencer UOS-1)
CE marking (see declaration of conformity)[3]		To EU EMC Directive
		To EU Machinery Directive
		To EU RoHS Directive
UKCA marking (see declaration of conformity)[3]		To UK instructions for EMC
		To UK instructions for machines
		To UK RoHS instructions
UL certification[3]		c UL us - Recognized (OL)
Certification		RCM
KC marking		KC EMC

1) With pressure sensor AD...
2) More information: www.festo.com/x/topic/crc
3) More information: www.festo.com/catalogue/ms-sv ➔ Support/Downloads.

Datasheet MS6-SV-D

Weight [g]	
Soft-start/quick exhaust valve	1900
Soft-start/quick exhaust valve with silencer UOS-1	2110

Materials	
Housing	Die-cast aluminium
Piston rod	High-alloy stainless steel
Seals	NBR
Note on materials	RoHS-compliant
LABS (PWIS) conformity	VDMA24364-B1/B2-L

Switch-through pressure

Pressure p as a function of time t

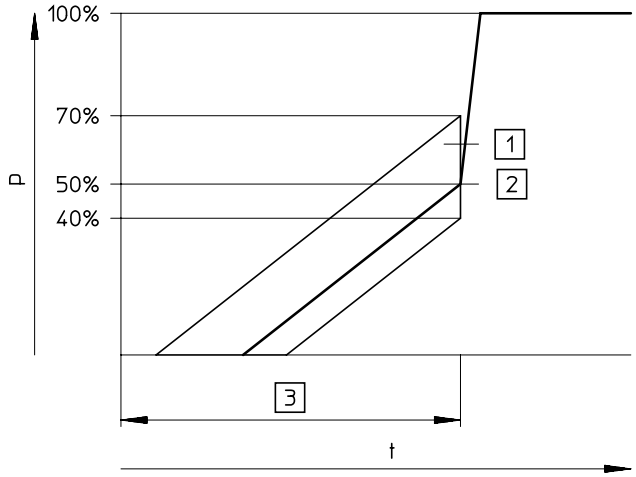

[1] Tolerance range
[2] Switching point
[3] Filling time is adjustable via a restrictor

Note

The +20%/–10% switching pressure tolerance refers to the operating pressure p1.
Example: a switching pressure from 1.6 bar to 2.8 bar is permissible at an operating pressure of 4 bar.

Datasheet MS6-SV-D

Dimensions – Basic version

Download CAD data ➔ www.festo.com

With supply voltage 10V24, with female thread 1/2, with cover plate

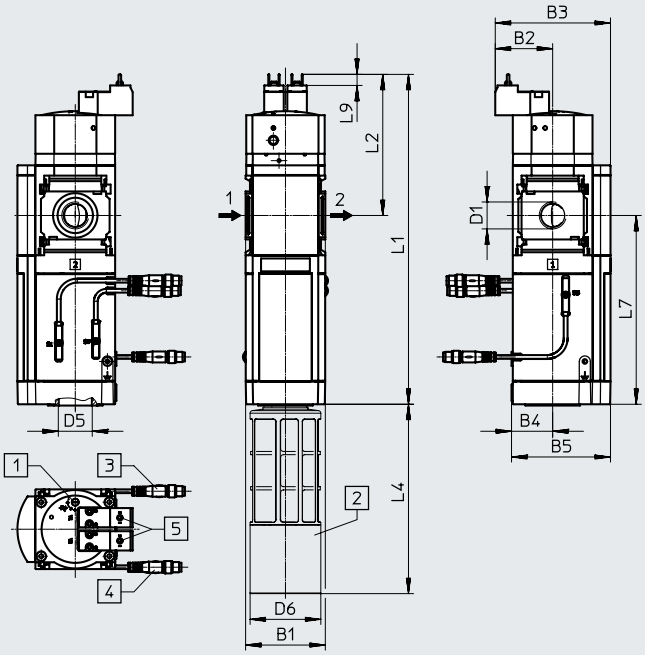

With supply voltage 10V24P, with female thread 1/2, with cover plate

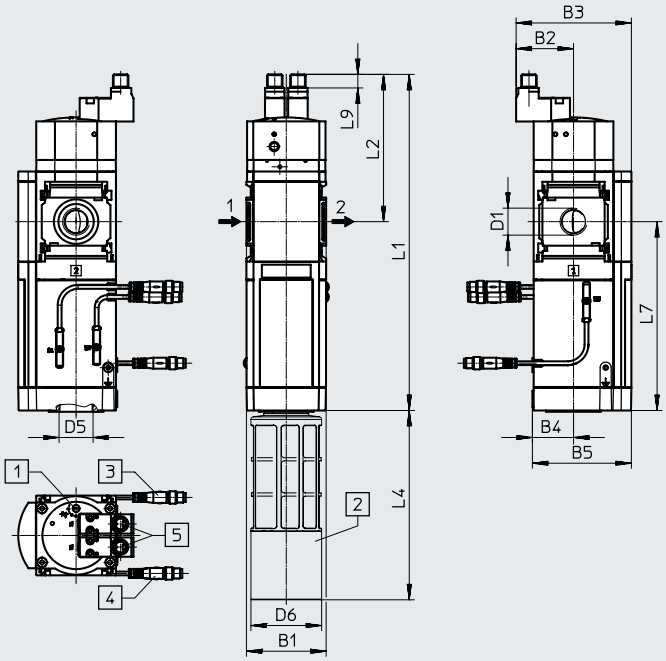

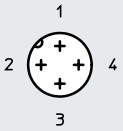

1 = not assigned
2 = not assigned
3 = com (–)
4 = Signal (+) solenoid 14

[1] Adjusting screw for flow control valve
[2] Silencer UOS-1
[3] Extended sensing,
– Variant S3:
additional third proximity switch SMT, connection depends on the selected connection technology

[4] Connection technology,
– Variant 2M8:
2 proximity switches SMT with cable (M8x1 plug, 3-pin, rotatable thread, cable length 0.3 m)
– Variant 2M12:
2 proximity switches SMT with cable (M12x1 plug, 3-pin, rotatable thread, cable length 0.3 m)
– Variant 2OE:
2 proximity switches SMT with cable (open end, 3-wire, cable length 5 m)

[5] Supply voltage,
– Variant 10V24:
electrical connection to EN 175301-803, 2x plugs, 2-pin, type C
– Variant 10V24P:
electrical connection 2x M12x1 to ISO 20401 in line with EN 61076-2-101, 4-pin version for connecting cable NEBA-M12

➔ Flow direction

Type	B1	B2	B3	B4	B5	D1	D5	D6 ⌀	L1	L2	L4	L7	L9
MS6-SV-1/2-D-10V24	62	45	90	31	76	G1/2	G1	55	257	110	147	147	9
MS6-SV-1/2-D-10V24P									262	115			11

Note: This product conforms to ISO 1179-1 and ISO 228-1.

Datasheet MS6-SV-D

Dimensions – Pressure gauges/pressure gauge alternatives

Download CAD data ➔ www.festo.com

Integrated MS pressure gauge with standard scale AG or red/green scale RG, display unit [bar]

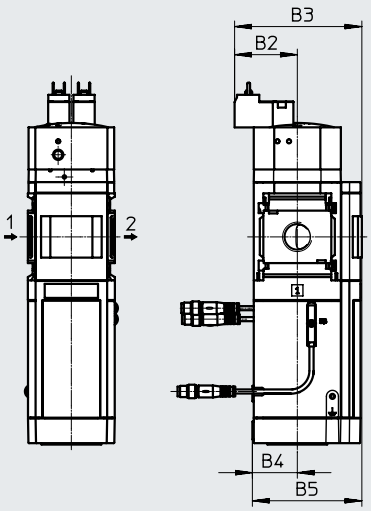

➔ Flow direction

Adapter A4 for EN pressure gauge 1/4, without pressure gauge

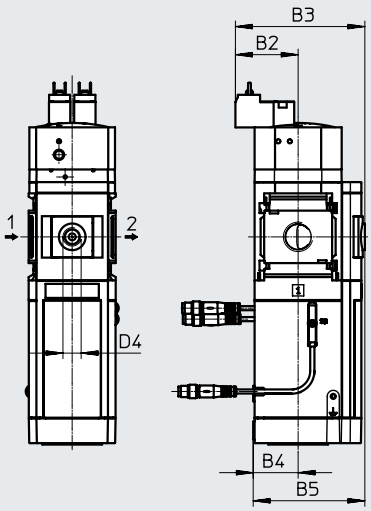

➔ Flow direction

Type	B2	B3	B4	B5	D4
MS6-SV-...-D-...-AG	44	90	31	77	–
MS6-SV-...-D-...-RG	44	91.5	31	78.5	–
MS6-SV-...-D-...-A4	44	91.5	31	78.5	G1/4

Note: This product conforms to ISO 1179-1 and ISO 228-1.

Datasheet MS6-SV-D

Ordering data				
Size	Connection	Description	Part no.	Type
24 V DC, 10 bar, connection pattern to EN 175301, 2 proximity switches SMT with cable (M8x1 plug, 3-pin, rotatable thread, cable length 0.3 m)				
MS6	G1/2	Without silencer, with cover plate	**8038489**	**MS6-SV-1/2-D-10V24-2M8**
		With silencer and MS pressure gauge with standard scale, display unit [bar]	**8038490**	**MS6-SV-1/2-D-10V24-2M8-SO-AG**
24 V DC, 10 bar, M12 plug socket adapter (connection pattern to EN 60947-5-2), 2 proximity switches SMT with cable (M12x1 plug, 3-pin, rotatable thread, cable length 0.3 m)				
MS6	G1/2	With silencer	**8182930**	**MS6-SV-1/2-D-10V24P-2M12-SO**
		With silencer and MS pressure gauge with standard scale, display unit [bar]	**8038491**	**MS6-SV-1/2-D-10V24P-2M12-SO-AG**
		With silencer and integrated pressure gauge with red/green scale, display unit [bar]	**8165924**	**MS6-SV-1/2-D-10V24P-2M12-SO-RG**
24 V DC, 10 bar, connection pattern to EN 175301, 2 proximity switches SMT with cable (open end, 3-core, cable length 5 m)				
MS6	G1/2	With silencer and MS pressure gauge with standard scale, display unit [bar]	**8038492**	**MS6-SV-1/2-D-10V24-2OE-SO-AG**

Ordering data – Modular product system MS6-SV-D

Ordering table					
Grid dimension [mm]	62	Conditions	Code		Enter code
Module no.	**548713**				
Series	Standard		**MS**		MS
Size	6		**6**		6
Function	Soft-start/quick exhaust valve		**-SV**		-SV
Pneumatic connection	Female thread G1/2		**-1/2**		
	Connecting plate G1/4		**-AGB**		
	Connecting plate G3/8		**-AGC**		
	Connecting plate G1/2		**-AGD**		
	Connecting plate G3/4		**-AGE**		
	Connecting plate 1/4 NPT		**-AQN**		
	Connecting plate 3/8 NPT		**-AQP**		
	Connecting plate 1/2 NPT		**-AQR**		
	Connecting plate 3/4 NPT		**-AQS**		
Performance Level	Category 3, 2-channel to EN ISO 13849-1		**-D**		-D
Supply voltage	24 V DC (plug pattern to EN 175301)		**-10V24**		
	24 V DC, M12x1 to ISO 20401 in line with EN 61076-2-101		**-10V24P**		
Connection technology	2 proximity switches SMT with cable (M8x1 plug, 3-pin, rotatable thread, cable length 0.3 m)		**-2M8**		
	2 proximity switches SMT with cable (M12x1 plug, 3-pin, rotatable thread, cable length 0.3 m)		**-2M12**		
	2 proximity switches SMT with cable (open end, 3-core, cable length 5 m)		**-2OE**		
Extended sensing	Additional proximity switch SMT; required to achieve Performance Level e; connection depends on the selected connection technology		**-S3**		
Silencer	Open silencer		**-SO**		
Pressure gauge/pressure gauge alternatives	MS pressure gauge	[1]	**-AG**		
	Adapter for EN pressure gauge 1/4, without pressure gauge		**-A4**		
	Integrated pressure gauge, red/green scale	[1]	**-RG**		
	Pressure sensor SPAU with LCD display, M12 plug, 4-pin, IO-Link®, PNP, NPN, 0 ... 10 V, 1 ... 5 V, 4 ... 20 mA	[2]	**-AD11**		
	Pressure sensor SPAU with LCD display, M8 plug, 4-pin, IO-Link®, PNP, NPN, 0 ... 10 V, 1 ... 5 V, 4 ... 20 mA	[2]	**-AD12**		
Alternative pressure gauge scale	psi	[3]	**-PSI**		
	MPa	[4]	**-MPA**		
Type of mounting	Mounting bracket standard design		**-WP**		
	Mounting bracket for hooking in service unit components	[5]	**-WPM**		
	Mounting bracket for large wall gap		**-WPB**		
	Mounting bracket centrally at rear (wall mounting top and bottom), connecting plates not required		**-WB**		
UL certification	cULus, ordinary location for Canada and USA		**-UL1**		
Flow direction	Flow direction from right to left		**-Z**		

[1] **AG, RG** Pressure gauge scale in bar
[2] **AD11, AD12** Measuring range max. 10 bar
[3] **PSI** Only in combination with pressure gauge AG
[4] **MPA** Only in combination with pressure gauge AG or RG
[5] **WPM** Only with connecting plate AGB, AGC, AGD, AGE, AQN, AQP, AQR or AQS

Peripherals overview MS6-SV-E

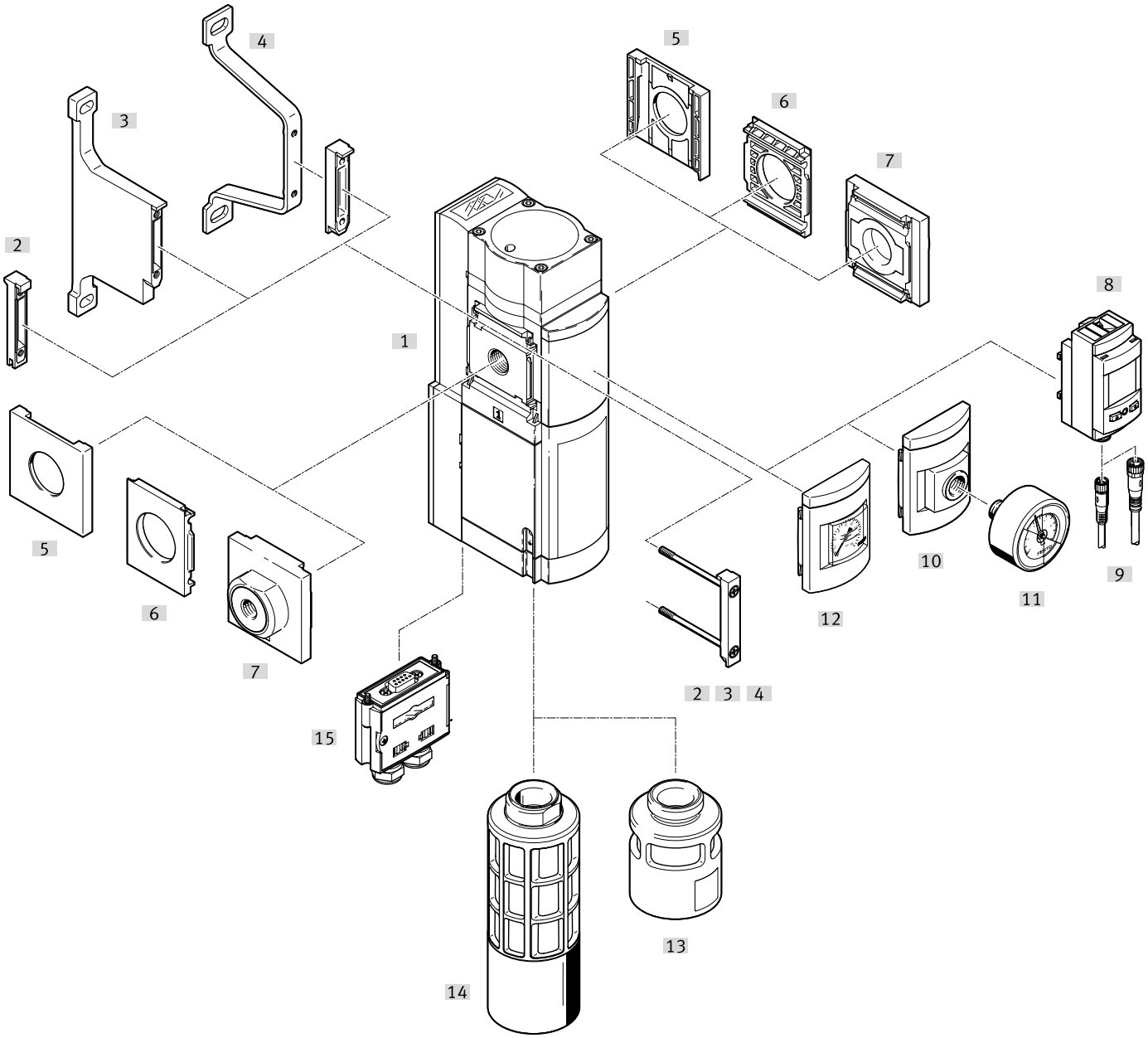

Note

Additional accessories:

- Module connector for combination with size MS4/MS6 or size MS9
  ➔ Internet: amv rmv
- Adapter for mounting on profiles
  ➔ Internet: ipm

Peripherals overview MS6-SV-E

Mounting attachments and accessories			Single device		Combination		→ Page/Internet
			Without connecting plate	With connecting plate	Without connecting plate	With connecting plate	
[1]	MS6-SV-E	Soft-start/quick exhaust valve	■	■	■	■	32
[2]	MS6-MV	Module connector	–	–	■	■	ms6-mv
[3]	MS6-WPB	Mounting bracket	■	■	■	■	ms6-wpb
[4]	MS6-WPE	Mounting bracket	■	■	■	■	ms6-wpe
[5]	MS6-END	Cover cap	–	–	■	–	ms6-end
[6]	MS6-AEND	Mounting plate	■[1)]	–	■[1)]	–	ms6-aend
[7]	MS6-AG...	Connecting plate SET	–	■[1)]	–	■[1)]	ms6-ag
	MS6-AQ...	Connecting plate SET	–	■[1)]	–	■[1)]	ms6-aq
[8]	AD11 ... AD12	Pressure sensor SPAU with LCD display	■	■	■	■	17
[9]	NEBA-M8...-LE4/NEBA-M12...-LE4	Connecting cable	■	■	■	■	54
[10]	A4	Adapter for EN pressure gauge 1/4	■	■	■	■	39
[11]	MA	Pressure gauge	■	■	■	■	54
[12]	AG/RG	MS pressure gauge	■	■	■	■	39
[13]	UOS-1-LF	Silencer	■	■	■	■	51
[14]	UOS-1	Silencer	■	■	■	■	51
[15]	NECA	Multi-pin plug socket	■	■	■	■	49

1) Module connector MS6-MV [2] or mounting bracket MS6-WPB [3] or MS6-WPE [4] is required for assembly.

Datasheet MS6-SV-E

Function

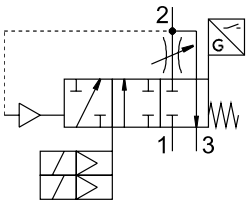

Flow rate
4300 l/min

Temperature range
–10 ... +50°C

Operating pressure
3.5 ... 10 bar

www.festo.com

The electropneumatic soft-start/quick exhaust valve is used to reduce pressure quickly and safely and to build up pressure gradually in industrial pneumatic piping systems and terminal equipment.
The device is a self-testing, redundant mechatronic system conforming to the requirements of EN ISO 13849-1. The safety-related pneumatic protection objective of safe exhausting is also guaranteed in the event of faults inside the valve (e.g. due to wear, contamination, electronic faults). The 2-channel design and its monitoring enables the device to meet controller category 3 and 4 requirements. This enables a Performance Level of max. "e".
The device receives the secure enable signals (EN1/EN2) via the electrical connection (multi-pin plug socket NECA Sub-D, 9-pin or AS-i connecting cable). The signals are generated by commercially available electronic or electromechanical safety switching devices which monitor the protective equipment of the machine (e.g. emergency stop, light curtain, electrical door switch of a protective enclosure, etc.).

- Performance Level "e" / Category 4 to EN ISO 13849-1
- Conforms to standard IEC 61508
- Switching time delay adjustable via a restrictor for slowly building up the pressure
- Optional pressure sensor

Note
The MS6N-SV-...-E-10V24 should only be used in combination with the multi-pin plug socket NECA for which it is approved.
The multi-pin plug socket can be ordered via the modular product system (MP → page 39) or as an accessory (NECA → page 49).

Note
To avoid back pressures, it is recommended that the device is operated with the silencer UOS-1. The silencer can be ordered via the modular product system (SO → page 39) or as an accessory (UOS-1 → page 51).

Note
Only devices that do not impair the pneumatic protective measure – "safe exhausting" – may be placed downstream of the MS6-SV-...-E.
The MS6-SV-...-E is not approved for use as a press safety valve.

Safety data	
Type	MS6-SV-...-E-10V24
Conforms to	EN ISO 13849-1
Safety function	Exhausting
	Prevention of unexpected start-up (pressurisation)
Performance Level (PL)	Exhausting: up to category 4, PL e
	Prevention of unexpected start-up (pressurisation): up to category 4, PL e
Safety integrity level (SIL)	Exhausting: SIL 3
	Prevention of unexpected start-up (pressurisation): SIL 3
Note on forced checking procedure	Switching frequency min. 1/month
Certificate issuing authority[1)]	IFA 1001180
Shock resistance	Shock test with severity level 2 to FN 942017-5 and EN 60068-2-27
Vibration resistance	Transport application test with severity level 2 to FN 942017-4 and EN 60068-2-6

Note
The mechanical system is not tested in the controlled (i.e. pressurised) state.

Forced switch on/off: switching frequency should be at least once a month.

If the process-related switching frequency (safe exhausting) is less than once a month,

the machine operator must carry out a forced switch off.

Datasheet MS6-SV-E

Operational principle of the multi-pin plug socket NECA

Enable signal status		Status of MS6-SV-...-E-10V24 with multi-pin plug socket		
EN1	EN2	NECA-...-MP1	NECA-...-MP3	NECA-...-MP5
0 V	0 V	Unpressurised	MS6-SV-...-E-10V24 switches to fault mode.	MS6N-SV-...-E-10V24 does not switch to fault mode, but remains in the safe, unpressurised state. **Note:** Detection of cross-circuits and error detection/evaluation necessary using an external controller.
0 V	24 V	MS6-SV-...-E-10V24 switches to fault mode.	Pressurised	Pressurised
24 V	24 V	Pressurised	MS6-SV-...-E-10V24 switches to fault mode.	MS6N-SV-...-E-10V24 does not switch to fault mode, but remains in the safe, unpressurised state. **Note:** Detection of cross-circuits and error detection/evaluation necessary using an external controller.
24 V	0 V	MS6-SV-...-E-10V24 switches to fault mode.	Unpressurised	Unpressurised

MS6-SV-...-E-10V24 with multi-pin plug socket NECA

NECA-...-MP1

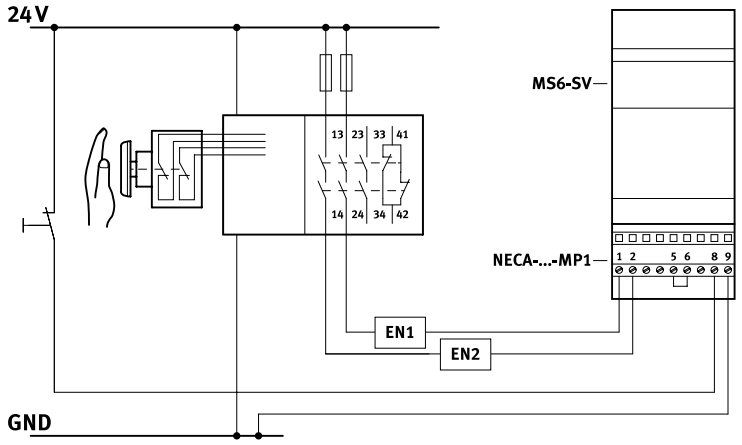

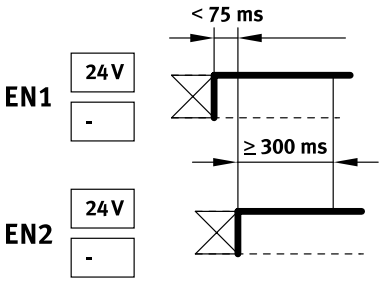

- Static enable signals (EN1 = 24 V, EN2 = 24 V).

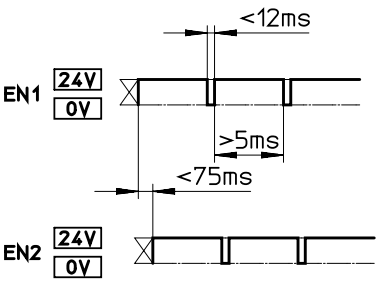

- Clocked enable signals (EN1 = 0 ... 24 V, EN2 = 0 ... 24 V) for detection of cross-circuits.
  Detection of cross-circuits by clock pulse signals is always carried out by the safety relay unit/safety PLC.

Note

Since the clock pulse outputs from different controller manufacturers are not standardised, their usability must be checked in each case. If the clock pulse is outside the specified limits, the MS6N-SV-...-E-10V24 detects it as an error and a safe shutdown is initiated.

Datasheet MS6-SV-E

MS6-SV-...-E-10V24 with multi-pin plug socket NECA

NECA-...-MP3

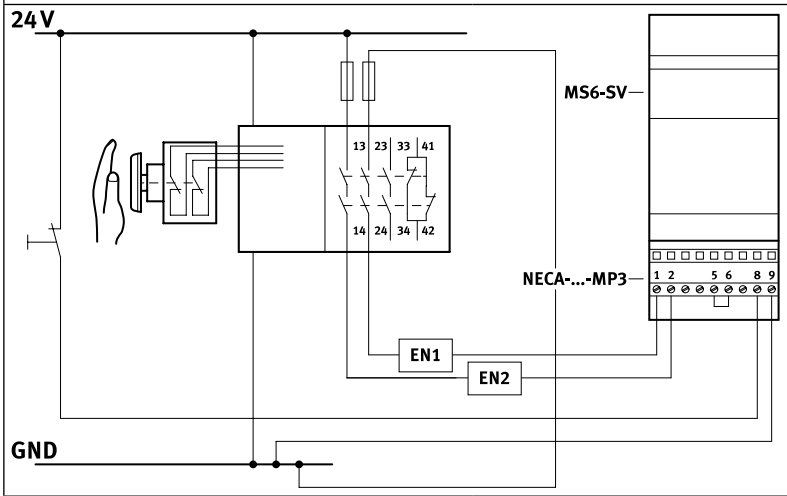

Note

The multi-pin plug socket NECA-S1G9-P9-MP3 is intended for conventional circuitry with electromechanical safety relays. If problems arise when used with bipolar semiconductor outputs, use the multi-pin plug socket NECA-S1G9-P9-MP5.

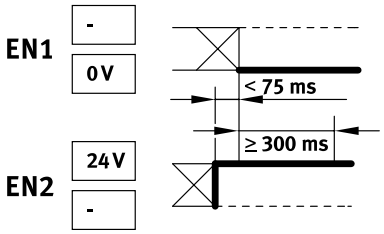

- Static enable signals with opposite potentials.
- Time delay of the level change of the enable signals is monitored.
- Behaviour on detection of a cross-circuit:
  - MS6N-SV-...-E-10V24 in exhausted state: remains in safe state and goes into error mode.
  - MS6N-SV-...-E-10V24 in pressurised state: goes into safe state and goes into error mode.

NECA-...-MP5

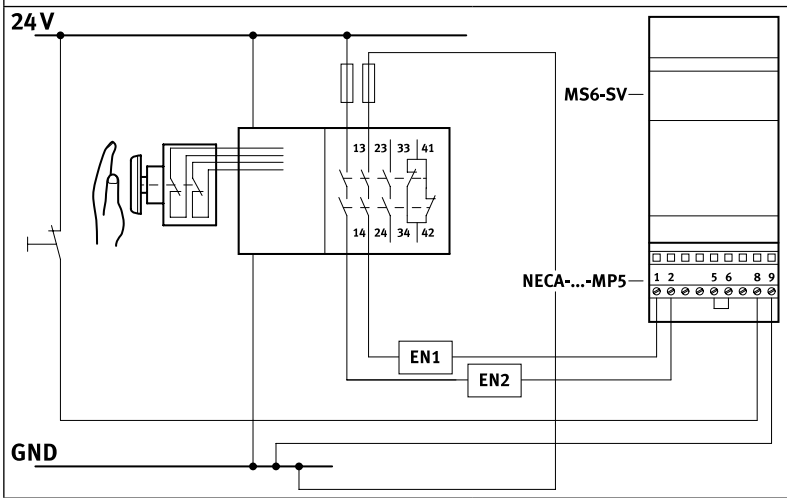

Note

A cross-circuit between the enable signals EN1/EN2 is not detected and does not cause an error response. The system is pressurised only if the enable signals are applied correctly.

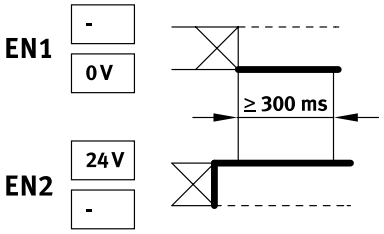

- Static enable signals with opposite potentials.
- Time delay of the level change of the enable signals is not monitored.
- Behaviour on detection of a cross-circuit (by upstream safety relay unit/PLC):
  - MS6-SV-...-E-10V24 in exhausted state: remains in a safe state and does not go into error mode.
  - MS6-SV-...-E-10V24 in pressurised state: goes into a safe state and does not go into error mode.
- Enable signals are galvanically separated from the supply voltage.

Note

The time delay between EN1 and EN2 must be automatically determined. The duration of the delay is not evaluated.

Datasheet MS6-SV-E

General technical data		
Pneumatic connection 1, 2		
	Female thread	G1/2
	Connecting plate AG...	G1/4, G3/8, G1/2 or G3/4
	Connecting plate AQ...	1/4 NPT, 3/8 NPT, 1/2 NPT or 3/4 NPT
Pneumatic connection 3		G1
Actuation type		Electrical
Design		Piston seat
Lap		Underlap
Type of mounting		With accessories
		In-line installation
Mounting position		Any
Pressure indication		With pressure sensor for indicating the output pressure via LCD display and electrical output
		With pressure gauge for displaying the output pressure
		With pressure gauge with red/green scale for indicating the output pressure
		Prepared for G1/4
Position sensing principle		Magnetic piston principle
Valve function		3/2-way valve, closed, single solenoid
		Soft-start function, adjustable
Non-overlapping		No
Exhaust air function		Cannot be throttled
Manual override		None
Reset method		Mechanical spring
Type of actuation		Piloted
Pilot air supply		Internal
Sealing principle		Soft

Note: This product conforms to ISO 1179-1 and ISO 228-1.

Characteristic flow rate values	
Pneumatic connection	Female thread G1/2
Standard nominal flow rate qnN[1] [l/min]	
In main flow direction 1 → 2	4300
Standard flow rate qN [l/min], p2 = 6 bar	
In exhaust direction 2 → 3	9000[2]
C value [l/s*min]	
In main flow direction 1 → 2	19.3
b value	
In main flow direction 1 → 2	0.21

1) Measured at p1 = 6 bar and p2 = 5 bar, Δp = 1 bar
2) Measured with reference to atmosphere with silencer UOS-1.

Electrical data		
Type		MS6-SV-...-E-10V24
Electrical connection		Sub-D 9-polig
Nominal operating voltage	[V DC]	24
Permissible voltage fluctuations	[%]	±10
Operating voltage range for AS-Interface	[V DC]	–
Duty cycle	[%]	100
Max. switching frequency	[Hz]	0.5
Switching time off	[ms]	40
Switching time on	[ms]	130
Signal status indication		LED and floating contact
Degree of protection		IP65 with plug socket

Datasheet MS6-SV-E

Operating and environmental conditions	
Type	MS6-SV-...-E-10V24
Operating pressure [bar]	3.5 ... 10
Operating medium	Compressed air to ISO 8573-1:2010 [7:4:4]
Note on the operating/pilot medium	Lubricated operation possible (in which case lubrication will always be required)
Ambient temperature [°C]	–10 ... +50 (0 ... +50)[1]
Temperature of medium [°C]	–10 ... +50 (0 ... +50)[1]
Storage temperature [°C]	–10 ... +50 (0 ... +50)[1]
Corrosion resistance class CRC[2]	2
Noise level [dB(A)]	75 (with silencer UOS-1)
CE marking (see declaration of conformity)[3]	To EU EMC Directive
	To EU Machinery Directive
	To EU RoHS Directive
UKCA marking (see declaration of conformity)[3]	To UK instructions for EMC
	To UK instructions for machines
	To UK RoHS instructions
Certificate issuing authority[3]	IFA 1001180
	Intertek UK-MCR-0086
UL certification[3]	c UL us - Recognized (OL)
Certification	RCM
KC marking	KC EMC

1) With pressure sensor AD...
2) More information: www.festo.com/x/topic/crc
3) More information: www.festo.com/catalogue/ms-sv ➔ Support/Downloads.

Weight [g]	
Soft-start/quick exhaust valve	2000
Soft-start/quick exhaust valve with silencer UOS-1	2200

Materials	
Housing	Die-cast aluminium
Piston rod	High-alloy stainless steel
Seals	NBR
Note on materials	RoHS-compliant
LABS (PWIS) conformity	VDMA24364-B1/B2-L

Datasheet MS6-SV-E

Switching point

Pressure p as a function of time t

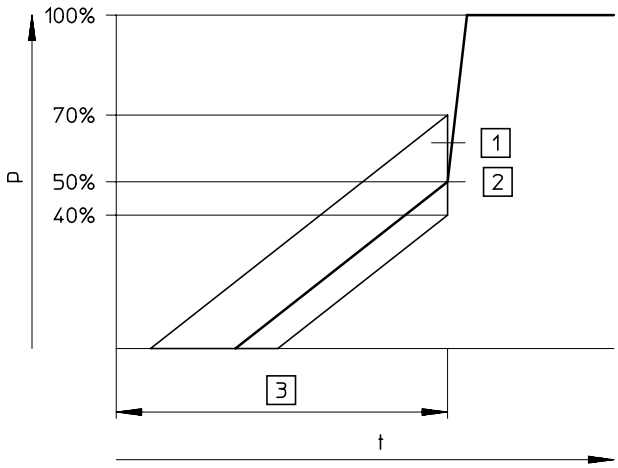

[1] Tolerance range
[2] Switching point
[3] Filling time is adjustable via a restrictor

Note

The +20%/–10% switching point tolerance refers to the operating pressure p1.
Example: A switching point from 1.6 bar to 2.8 bar is permissible at an operating pressure of 4 bar.

Dimensions – Basic version

Download CAD data ➔ www.festo.com

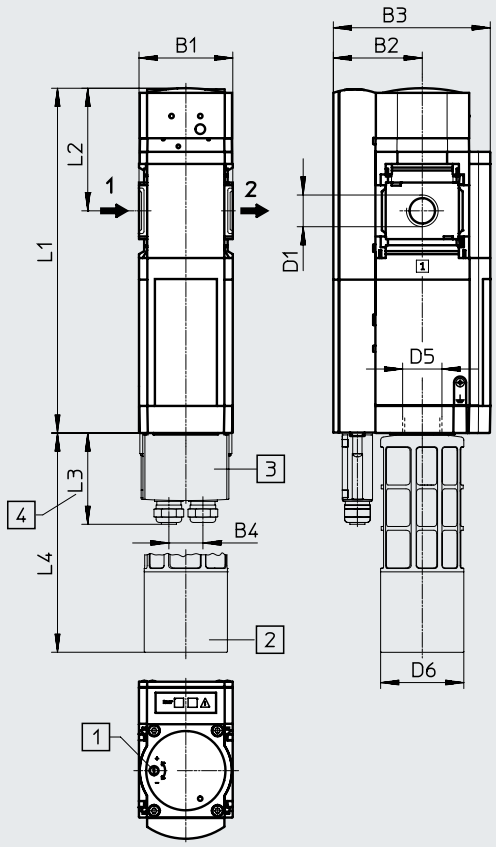

[1] Regulating screw for flow control valve
[2] Silencer UOS-1
[3] Multi-pin plug socket NECA
[4] Dimension without cable

➔ Flow direction

Type	B1	B2	B3	B4	D1	D5	D6	L1	L2	L3	L4
MS6-SV-1/2-E-10V24	62	59	104	23	G1/2	G1	55	228	81	61	145

Note: This product conforms to ISO 1179-1 and ISO 228-1.

Datasheet MS6-SV-E

Dimensions – Pressure gauges/pressure gauge alternatives

Download CAD data ➔ www.festo.com

Integrated MS pressure gauge AG with standard scale AG or red/green scale RG, display unit [bar]

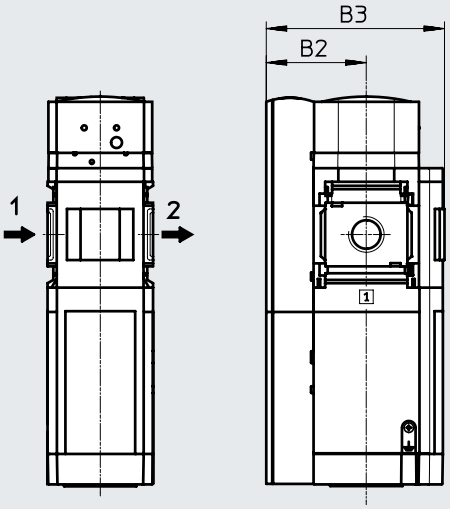

➔ Flow direction

Adapter A4 for EN pressure gauge 1/4, without pressure gauge

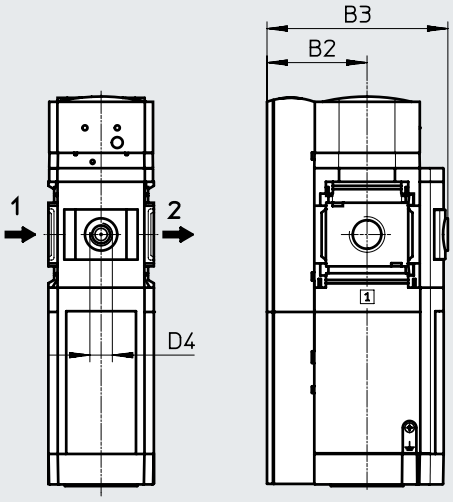

➔ Flow direction

Type	B2	B3	D4
MS6-SV-...-E-...-AG	59	105	–
MS6-SV-...-E-...-RG	59	106.5	–
MS6-SV-...-E-...-A4	59	106.5	G1/4

Note: This product conforms to ISO 1179-1 and ISO 228-1.

Ordering data

Size	Connection	Without silencer		With silencer	
		Part no.	Type	Part no.	Type
MS pressure gauge, display unit [bar]					
MS6	G1/2	**548715**	**MS6-SV-1/2-E-10V24-AG**	**548717**	**MS6-SV-1/2-E-10V24-SO-AG**
		–		**8190258**	**MS6-SV-1/2-E-10V24-SO-AG-MP1**
Adapter for EN pressure gauge 1/4, without pressure gauge					
MS6	G1/2	**–**		**611497**	**MS6-SV-1/2-E-10V24-SO-A4-MP1-WPB-UL1**

Ordering data – Modular product system MS6N-SV-E

Ordering table					
Grid dimension [mm]	62	Conditions	Code		Enter code
Module no.	**548713**				
Series	Standard		**MS**		MS
Size	6		**6**		6
Function	Soft-start/quick exhaust valve		**-SV**		-SV
Pneumatic connection	Female thread G1/2		**-1/2**		
	Connecting plate G1/4		**-AGB**		
	Connecting plate G3/8		**-AGC**		
	Connecting plate G1/2		**-AGD**		
	Connecting plate G3/4		**-AGE**		
	Connecting plate 1/4 NPT		**-AQN**		
	Connecting plate 3/8 NPT		**-AQP**		
	Connecting plate 1/2 NPT		**-AQR**		
	Connecting plate 3/4 NPT		**-AQS**		
Performance Level	Category 4, 2-channel with self-monitoring to ISO 13849-1		**-E**		-E
Supply voltage	24 V DC		**-10V24**		
Silencer	Open silencer		**-SO**		
Pressure gauge/pressure gauge alternatives	MS pressure gauge	[1]	**-AG**		
	Adapter for EN pressure gauge 1/4, without pressure gauge		**-A4**		
	Integrated pressure gauge, red/green scale	[1]	**-RG**		
	Pressure sensor SPAU with LCD display, M12 plug, 4-pin, IO-Link®, PNP, NPN, 0 ... 10 V, 1 ... 5 V, 4 ... 20 mA	[2]	**-AD11**		
	Pressure sensor SPAU with LCD display, M8 plug, 4-pin, IO-Link®, PNP, NPN, 0 ... 10 V, 1 ... 5 V, 4 ... 20 mA	[2]	**-AD12**		
Alternative pressure gauge scale	psi	[3]	**-PSI**		
	MPa	[4]	**-MPA**		
Multi-pin plug socket	Sub-D, 9-pin, screw terminal, without cable, static enable signals (EN1 = 24 V, EN2 = 24 V)		**-MP1**		
	Sub-D, 9-pin, screw terminal, without cable, static enable signals (EN1 = 0 V, EN2 = 24 V), Cross-circuit detection possible		**-MP3**		
	Sub-D, 9-pin, screw terminal, without cable, static enable signals (EN1 = 0 V, EN2 = 24 V), galvanic isolation of enable signal from the supply voltage		**-MP5**		
Type of mounting	Mounting bracket for large mounting spacing		**-WPB**		
UL certification	cULus, ordinary location for Canada and USA		**-UL1**		
Flow direction	Flow direction from right to left		**-Z**		

[1] **AG, RG** Pressure gauge scale in bar
[2] **AD11, AD12** Measuring range max. 10 bar
[3] **PSI** Only in combination with pressure gauge AG
[4] **MPA** Only in combination with pressure gauge AG or RG

Type codes MS9-SV

001	Series	
MS	MS series	

002	Size	
9	Grid dimension 90 mm	

003	Function	
SV	Soft-start/quick exhaust valve	

004	Pneumatic connection	
3/4	Female thread G3/4	
1	Female thread G1	
AGD	Sub-base G1/2	
AGE	Sub-base G3/4	
AGF	Sub-base G1	
AGG	Connecting plate G1 1/4	
AGH	Connecting plate G1 1/2	
N3/4	Female thread 3/4 NPT	
N1	Female thread 1 NPT	
AQR	Sub-base 1/2 NPT	
AQS	Sub-base 3/4 NPT	
AQT	Sub-base 1 NPT	
AQU	Sub-base 1 1/4 NPT	
AQV	Sub-base 1 1/2 NPT	
G	Module without connecting thread, without sub-base	
NG	Module without connecting thread, without sub-base (inch)	

005	Performance Level	
C	Category 1, 1-channel to ISO 13849-1	

006	Supply voltage	
10V24P	24 V DC, 10 bar, M12 (connection pattern to IEC 61076-2-101)	
V110	110 V AC (connection pattern to EN 175301)	
V230	230 V AC (connection pattern to EN 175301)	
V24	24 V DC (connection pattern to EN 175301)	

007	Silencer	
	None	
S	Silencer	

008	Pressure gauge alternatives	
	None	
A4	Adapter for EN pressure gauge 1/4, without pressure gauge	
A8	Adapter for EN pressure gauge 1/8, without pressure gauge	
AD7	Pressure sensor with switching display, M8 plug, threshold value comparator, PNP, N/O	
AD8	Pressure sensor with switching display, M8 plug, threshold value comparator, PNP, N/C	
AD9	Pressure sensor with switching display, M8 plug, window comparator, PNP, N/O	
AD10	Pressure sensor with operational status indicator, M8 plug, window comparator, PNP, N/C	
AG	MS pressure gauge	
RG	Integrated pressure gauge, red/green scale	
VS	Cover plate	

009	Alternative pressure gauge scale	
	MS pressure gauge	
PSI	psi	
BAR	bar	
MPA	MPa	

010	Type of mounting	
WP	Mounting bracket basic design	
WPB	Mounting bracket for large wall gap	
WPM	Mounting bracket for hooking in service unit components	

011	Tamper protection	
	None	
MK	Full	
MH	Without manual override	

012	Flow direction	
	Flow direction from left to right	
Z	Flow direction from right to left	

Peripherals overview MS9-SV-C

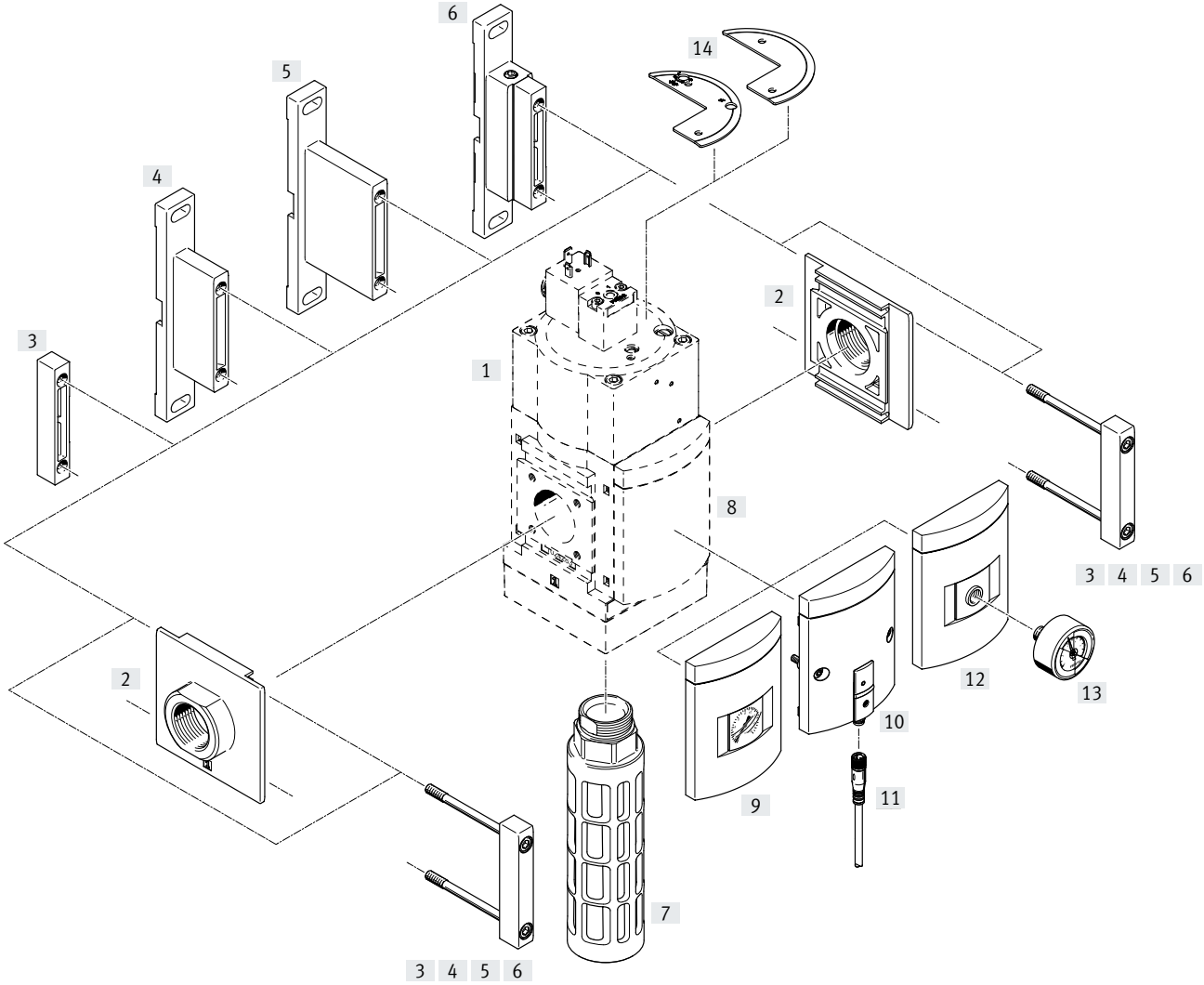

Mounting attachments and accessories			Single device		Combination	➔ Page/Internet
			With female thread 3/4, 1, N3/4, N1	With connecting plate AG…/AQ…	Module without connecting thread, without connecting plate G, NG	
[1]	MS9-SV-C	Soft-start/quick exhaust valve	■	■	■	43
[2]	MS9-AG…	Connecting plate SET	–	■	■	ms9-ag
	MS9-AQ…	Connecting plate SET	–	■	■	ms9-aq
[3]	MS9-MV	Module connector	–	–	■	ms9-mv
[4]	MS9-WP	Mounting bracket	■	■	■	ms9-wp
[5]	MS9-WPB	Mounting bracket	■	■	■	ms9-wp
[6]	MS9-WPM	Mounting bracket	■	■	■	ms9-wp
[7]	U-1-B	Silencer	■	■	■	53
[7]	VS	Cover plate	■	■	■	48
[9]	AG/RG	MS pressure gauge	■	■	■	48
[10]	AD7 … AD10	Pressure sensor with switching status indicator	■	■	■	48
[11]	NEBA-M8…-LE3	Connecting cable	■	■	■	54
[12]	A4	Adapter for EN pressure gauge 1/4	■	■	■	48
[13]	MA	Pressure gauge	■	■	■	54
[14]	MS9-SV-MH/MK	Covering	■	■	■	52

Peripherals overview MS9-SV-C

Supply voltage
V24, V110, V230

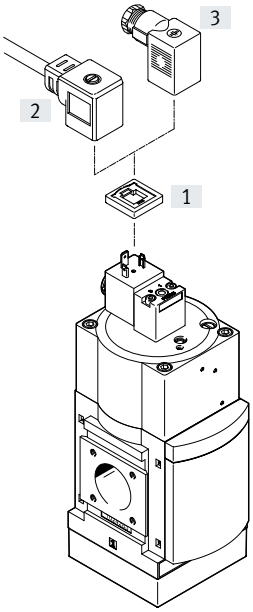

Supply voltage
10V24P

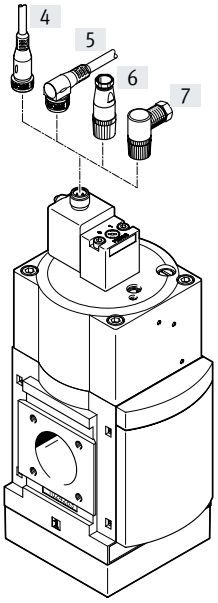

Note

Additional accessories:
- Module connector for combination with size MS6, MS9 or MS12
  ➔ Internet: rmv

Mounting attachments and accessories

			Single device		Combination	➔ Page/Internet
			With female thread 3/4, 1, N3/4, N1	With connecting plate AG…/AQ…	Module without connecting thread, without connecting plate G, NG	
[1]	MC-LD	Illuminating seal	■	■	■	54
[2]	KMC	Connecting cable	■	■	■	53
[2]	MSSD-C	Plug socket	■	■	■	53
[4]	NEBA-M12G5	Connecting cable	■	■	■	54
[5]	NEBA-M12W5	Connecting cable	■	■	■	54
[6]	NECB-M12G4-C2	Sensor socket	■	■	■	54
[7]	NECB-M12W4-C2	Angled plug socket	■	■	■	54

Datasheet MS9-SV-C

Function

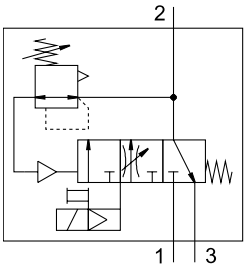

Flow rate
8300 ... 16550 l/min

Temperature range
0 ... +60°C

Operating pressure
0.35 ... 1.6 MPa

www.festo.com

Electropneumatic soft-start/quick exhaust valve for gradual pressurisation and quick exhausting of system components (single channel).

The main restrictor in the cover permits a gradual build-up of output pressure p2. Once the output pressure p2 has reached the set pressure switchover point (switching pressure), the valve opens and the full operating pressure p1 is available at the output.

- Suitable for applications with a high flow rate in restricted spaces with medium safety requirements up to controller category 1, Performance Level c
- High volumetric flow rate for pressurisation and exhaust
- The filling flow rate can be set for slowly building up the pressure using a restrictor
- Adjustable pressure switchover point
- Optional pressure sensor
- Optional cover as tamper protection for the control parts

Safety data	
Conforms to	EN ISO 13849-1
Safety function	Exhausting
Performance Level (PL)	Exhausting: up to category 1, PL c
Shock resistance	Shock test with severity level 1 to FN 942017-5 and EN 60068-2-27
Vibration resistance	Transport application test with severity level 1 to FN 942017-4 and EN 60068-2-6

General technical data		
Pneumatic connection 1, 2		
	Female thread	G3/4, G1, 3/4 NPT or 1 NPT
	Connecting plate AG...	G1/2, G3/4, G1, G1 1/4 or G1 1/2
	Connecting plate AQ...	1/2 NPT, 3/4 NPT, 1 NPT, 1 1/4 NPT or 1 1/2 NPT
	Module without connecting thread/connecting plate G/NG	–
Pneumatic connection 3		G1 (1 NPT)[1]
Actuation type		Electrical
Design		Piston spool
Type of mounting		With accessories
		In-line installation
Mounting position		Any
Pressure indication		With pressure sensor for indicating the output pressure and electrical output via LCD display
		With pressure gauge for displaying the output pressure
		With pressure gauge with red/green scale for indicating the output pressure
		Prepared for G1/4
Valve function		3/2-way valve, closed, single solenoid
		Soft-start function, adjustable
Exhaust air function		Cannot be throttled
Reset method		Mechanical spring
Type of actuation		Piloted
Sealing principle		Soft

1) Only with N3/4/N1/AQ.../NG without silencer S

Note: This product conforms to ISO 1179-1 and ISO 228-1.

Datasheet MS9-SV-C

Electrical data		
Characteristic coil data	V24	24 V DC: 8.4 W; permissible voltage fluctuations ±10%
	10V24P	24 V DC: 2.7 W; permissible voltage fluctuations ±10%
	V110	110 V AC: 50/60 Hz; pick-up power 14.5 VA; holding power 10.5 VA; permissible voltage fluctuations ±10%
	V230	230 V AC: 50/60 Hz; pick-up power 14.5 VA; holding power 10.5 VA; permissible voltage fluctuations ±10%
Nominal operating voltage DC [V]		110 230 24
Electrical connection	V24, V110, V230	Plug, square design to EN 175301-803, type A
	10V24P	M12x1, 4-pin, to IEC 61076-2-101, to DESINA
Degree of protection		IP65 with plug socket
Duty cycle [%]		100

Characteristic flow rate values							
Pneumatic connection	Female thread		Connecting plate				
	3/4/N3/4	1/N1	AGD/AQR	AGE/AQS	AGF/AQT	AGG/AQU	AGH/AQV
Standard nominal flow rate qnN[1] [l/min]							
In main flow direction 1 ➔ 2	14150	16460	8300	13250	16340	16550	15910
Standard flow rate qn [l/min]							
Exhaust 6 ➔ 0 bar with silencer S	21450	20870	21720	20900	20370	19730	19850
C value [l/s*min]							
In main flow direction 1 ➔ 2	57.61	69.59	31.43	54.24	68.24	68.45	66.07
In exhaust direction 2 ➔ 3	55.52	54.01	56.22	54.07	52.73	51.06	51.36
b value							
In main flow direction 1 ➔ 2	0.37	0.32	0.47	0.37	0.34	0.35	0.35
In exhaust direction 2 ➔ 3	0.49	0.46	0.60	0.49	0.47	0.45	0.44

1) Measured at p1 = 6 bar and p2 = 5 bar, Δp = 1 bar

Operating and environmental conditions				
Variant		Coil coefficient V24	Coil coefficient 10V24P	Coil coefficient V110, V230
Operating pressure	[MPa]	0.35 ... 1.6 (0.35 ... 1)[2]	0.35 ... 1	0.35 ... 1.6 (0.35 ... 1)[2]
	[bar]	3.5 ... 16 (3.5 ... 10)[2]	3.5 ... 10	3.5 ... 16 (3.5 ... 10)[2]
	[psi]	50.75 ... 232 (50.75 ... 145)[2]	50.75 ... 145	50.75 ... 232 (50.75 ... 145)[2]
Operating medium		Compressed air to ISO 8573-1:2010 [7:4:4]		
Note on the operating/ pilot medium		Lubricated operation possible (in which case lubrication will always be required)		
Ambient temperature	[°C]	0 ... +60 (0 ... +50)[2]		
Temperature of medium	[°C]	0 ... +60 (0 ... +50)[2]		
Storage temperature	[°C]	0 ... +60 (0 ... +50)[2]		
Corrosion resistance class CRC[1]		2		
Noise level[3]	[dB(A)]	93 (with silencer S)		
CE marking (see declaration of conformity)[4]		To EU EMC Directive To EU Machinery Directive To EU RoHS Directive		
UKCA marking (see declaration of conformity)[4]		To UK EMC regulations To UK regulations for machines To UK RoHS regulations		

1) More information: www.festo.com/x/topic/crc
2) With pressure sensor AD...
3) Exhaust at 10 bar at a distance of 1 m.
4) More information: www.festo.com/catalogue/ms-sv ➔ Support/Downloads.

Weight [g]	
Soft-start/quick exhaust valve	2970
Soft-start/quick exhaust valve with silencer S	3200

Datasheet MS9-SV-C

Materials

Sectional view

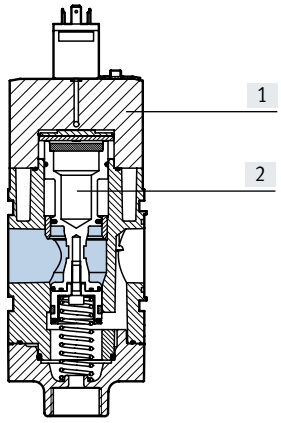

Soft-start/quick exhaust valve		
[1]	Housing	Die-cast aluminium
[2]	Piston spool	Brass
–	Seals	NBR
Note on materials		RoHS-compliant
LABS (PWIS) conformity		VDMA24364-B1/B2-L

Adjusting elements

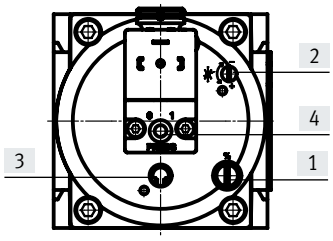

[1] Screw for adjusting the pressure switchover point

[2] Flow control screw for adjusting the filling time

[3] Manual override at the soft-start/quick exhaust valve:
– detenting/self-resetting as soon as the solenoid coil or manual override at the pilot solenoid valve is actuated.

[4] Manual override at the pilot solenoid valve:
– non-detenting, actuation from above

Dimensions – Basic version

Download CAD data ➔ www.festo.com

Module without connecting thread, without connecting plate G/NG, with cover plate VS

Supply voltage V24/V110/V230

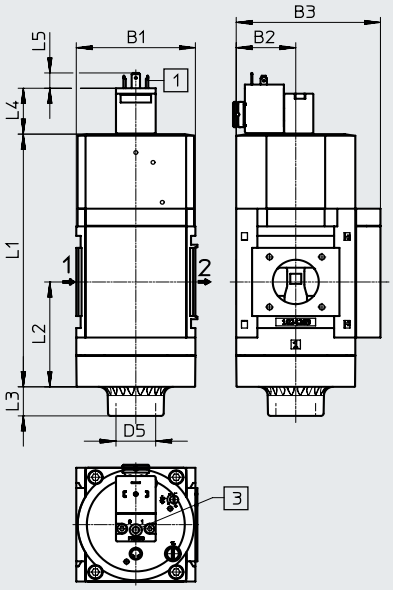

Supply voltage 10V24P

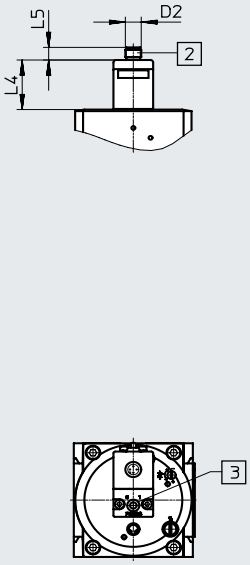

With silencer S

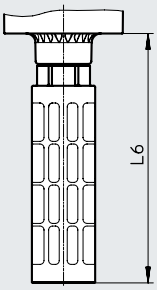

[1] Plug connection to EN 175301-803

[2] Electrical connection to IEC 61076-2-101, M12x1 plug, 4-pin in accordance with DESINA

[3] Manual override

➔ Flow direction

Type	B1	B2	B3	D2	D5	L1	L2	L3	L4	L5	L6
MS9-SV-G/NG-...-V24, V110, V230	90	45	109	–	G1 (1 NPT)[1]	200	83	23	36.4	12	189
MS9-SV-G/NG-...-10V24P				M12x1					39.2	10	

1) Only with N3/4/N1/AQ.../NG without silencer S

Datasheet MS9-SV-C

Dimensions – Connecting thread/connecting plate Download CAD data ➔ www.festo.com

With female thread 3/4, 1, N3/4, N1

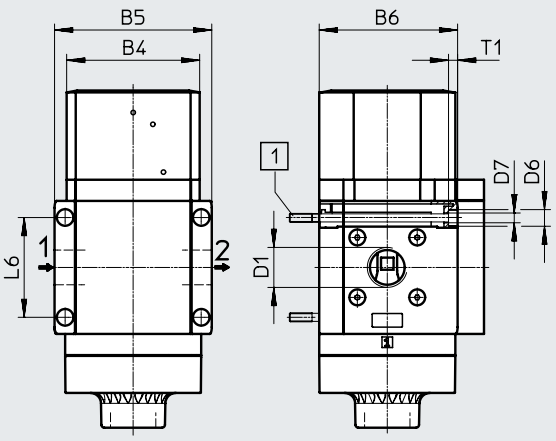

With connecting plate AG.../AQ...

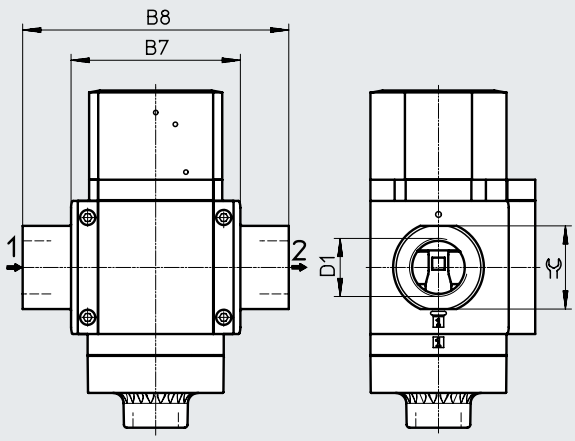

[1] Retaining screw M6xmin. 90 to DIN 912 (not included in the scope of delivery) for wall mounting without mounting bracket

➔ Flow direction

Type	B4	B5	B6	B7	B8	D1	D6	D7	L6	T1	⊂⊃
MS9-SV-3/4	90	104	91.5	–	–	G3/4	11	6.5	66	6	–
MS9-SV-1						G1					
MS9-SV-AGD	–	–	–	112	132	G1/2	–	–	–	–	30
MS9-SV-AGE					132	G3/4					36
MS9-SV-AGF					142	G1					41
MS9-SV-AGG					162	G1 1/4					50
MS9-SV-AGH					176	G1 1/2					55
MS9-SV-N3/4	90	104	91.5	–	–	3/4 NPT	11	6.5	66	6	–
MS9-SV-N1						1 NPT					
MS9-SV-AQR	–	–	–	112	132	1/2 NPT	–	–	–	–	30
MS9-SV-AQS					132	3/4 NPT					36
MS9-SV-AQT					142	1 NPT					41
MS9-SV-AQU					162	1 1/4 NPT					50
MS9-SV-AQV					176	1 1/2 NPT					55

Note: This product conforms to ISO 1179-1 and ISO 228-1.

Datasheet MS9-SV-C

Dimensions – Pressure gauges/pressure gauge alternatives Download CAD data ➔ www.festo.com

Integrated MS pressure gauge with standard scale AG or red/green scale RG

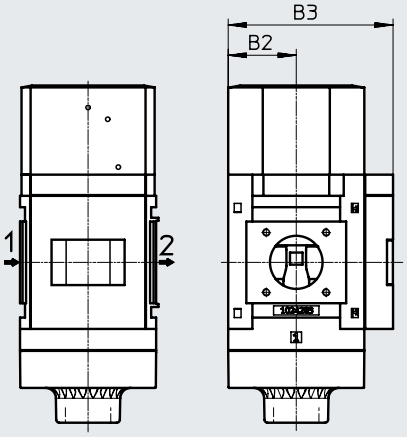

Adapter A4 for EN pressure gauge 1/4, without pressure gauge

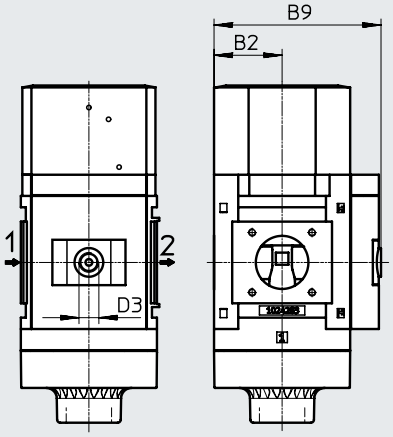

➔ Flow direction

Type	B2	B3	B9	D3
MS9-SV-...-AG/RG	45	109	–	–
MS9-SV-...-A4		–	110	G1/4

Note: This product conforms to ISO 1179-1 and ISO 228-1.

Dimensions – Pressure gauges/pressure gauge alternatives Download CAD data ➔ www.festo.com

Pressure sensor with switching status indicator AD7 ... AD10

Datasheets ➔ Internet: sde5

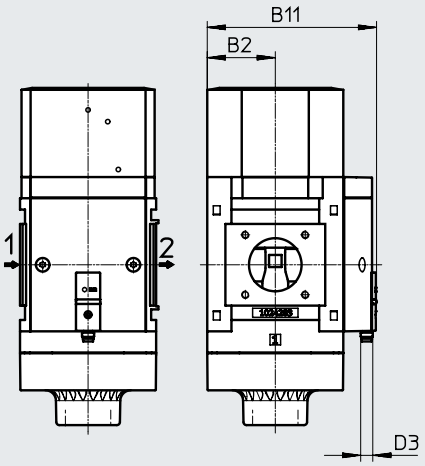

➔ Flow direction

[AD7]:
SDE5-D10-O-...-P-M8 with 3-pin plug M8x1, threshold value comparator, 1 switching output PNP, N/O contact

[AD8]:
SDE5-D10-C-...-P-M8 with 3-pin plug M8x1, threshold value comparator, 1 switching output PNP, N/C contact

[AD9]:
SDE5-D10-O3-...-P-M8 with 3-pin plug M8x1, window comparator, 1 switching output PNP, N/O contact

[AD10]:
SDE5-D10-C3-...-P-M8 with 3-pin plug M8x1, window comparator, 1 switching output PNP, N/C contact

Type	B2	B11	D3
MS9-SV-...-AD7, AD8, AD9, AD10	45	112	M8

Ordering data		
Size	With silencer	
	Part no.	Type
Cover plate		
MS9	**570737**	**MS9-SV-G-C-V24-S-VS**

Ordering data – Modular product system MS9N-SV-C

Ordering table Grid dimension [mm]	90	Conditions	Code		Enter code
Module no.	**562176**				
Series	Standard		**MS**		MS
Size	9		**9**		9
Function	Soft-start/quick exhaust valve		**-SV**		-SV
Pneumatic connection	Female thread G3/4		**-3/4**		
	Female thread G1		**-1**		
	Connecting plate G1/2		**-AGD**		
	Connecting plate G3/4		**-AGE**		
	Connecting plate G1		**-AGF**		
	Connecting plate G1 1/4		**-AGG**		
	Connecting plate G1 1/2		**-AGH**		
	Female thread 3/4 NPT		**-N3/4**		
	Female thread 1 NPT		**-N1**		
	Connecting plate 1/2 NPT		**-AQR**		
	Connecting plate 3/4 NPT		**-AQS**		
	Connecting plate 1 NPT		**-AQT**		
	Connecting plate 1 1/4 NPT		**-AQU**		
	Connecting plate 1 1/2 NPT		**-AQV**		
	Module without connecting thread, without connecting plate		**-G**		
	Module without connecting thread, without connecting plate		**-NG**		
Performance Level	Category 1, single-channel, to EN ISO 13849-1		**-C**		-C
Supply voltage	24 V DC (plug pattern to EN 175301), 16 bar		**-V24**		
	24 V DC, M12 to IEC 61076-2-101, 10 bar		**-10V24P**		
	110 V AC (plug pattern to EN 175301), 16 bar		**-V110**		
	230 V AC (plug pattern to EN 175301), 16 bar		**-V230**		
Silencer	Silencer		**-S**		
Pressure gauge/pressure gauge alternatives	MS pressure gauge		**-AG**		
	Cover plate		**-VS**		
	Adapter for EN pressure gauge 1/8, without pressure gauge		**-A8**		
	Adapter for EN pressure gauge 1/4, without pressure gauge		**-A4**		
	Integrated pressure gauge, red/green scale	[1]	**-RG**		
	Pressure sensor with status indicator, M8 plug, threshold value comparator, PNP, N/O contact	[2]	**-AD7**		
	Pressure sensor with status indicator, M8 plug, threshold value comparator, PNP, N/C contact	[2]	**-AD8**		
	Pressure sensor with status indicator, M8 plug, window comparator, PNP, N/O contact	[2]	**-AD9**		
	Pressure sensor with status indicator, M8 plug, window comparator, PNP, N/C contact	[2]	**-AD10**		
Alternative pressure gauge scale	psi	[3]	**-PSI**		
	MPa	[3]	**-MPA**		
	bar	[3]	**-BAR**		
Type of mounting	Mounting bracket standard design	[4]	**-WP**		
	Mounting bracket for hooking in service unit components	[4]	**-WPM**		
	Mounting bracket for large wall gap	[4]	**-WPB**		
Tamper protection	Without manual override (manual override at soft-start/quick exhaust valve blocked, setting screws open, manual override at pilot solenoid valve blocked)		**-MH**		
	Complete (manual override at soft-start/quick exhaust valve blocked, setting screws blocked, manual override at pilot solenoid valve blocked)		**-MK**		
Flow direction	Flow direction from right to left		**-Z**		

[1] **RG** Not with alternative pressure gauge scale PSI.
PSI scale is only an auxiliary scale (inner scale), outer scale in bar
[2] **AD7, AD8, AD9, AD10** Measuring range max. 10 bar
[3] **PSI, MPA, BAR** Only in combination with pressure gauge AG or RG
[4] **WP, WPM, WPB** Not with pneumatic connection G, NG

Accessories

Multi-pin plug socket NECA
(Order code in the modular product system: MP1/MP3/MP5)

- for soft-start/quick exhaust valve MS6N-SV-E-10V24

Technical data		
Type of mounting		With through-hole
Electrical connection 1		Socket, sub-D, 9-pin
Electrical connection 2		Screw terminal, 9-pin
Operating voltage range	[V DC]	21.6 ... 26.4
Nominal operating voltage	[V DC]	24
Current rating at 40°C	[A]	1.0
Connection cross section	[mm²]	0.34 ... 1.0 without wire end sleeves
	[mm²]	0.34 ... 0.5 with wire end sleeves
Permissible cable diameter	[mm]	5.0 ... 10.0
Degree of protection to IEC 60529		IP65

Operating and environmental conditions		
Relative humidity		95%, non-condensing
Ambient temperature	[°C]	0 ... +50
Storage temperature	[°C]	–20 ... +70
Corrosion resistance class CRC[1)]		2

1) More information: www.festo.com/x/topic/crc

Materials	
Housing	Reinforced PA
Screws	Steel
Union nut	Brass
Seals	NBR
LABS (PWIS) conformity	VDMA24364-B1/B2-L

Accessories

Dimensions Download CAD data ➔ www.festo.com

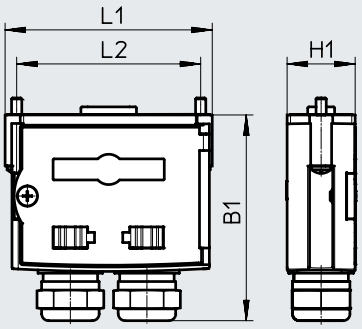

B1	H1	L1	L2
61	20	61	54.1

Ordering data

Description	Connection	Weight [g]	Part no.	Type
For MS6-SV-E-10V24	Without cable, static enable signals (EN1 = 24 V, EN2 = 24 V)	60	**548719**	**NECA-S1G9-P9-MP1**
	Without cable, static enable signals (EN1 = 0 V, EN2 = 24 V), cross-circuit detection possible	60	**552703**	**NECA-S1G9-P9-MP3**
	Without cable, static enable signals (EN1 = 0 V, EN2 = 24 V), galvanic isolation of enable signals from the supply voltage	60	**573695**	**NECA-S1G9-P9-MP5**

Accessories

Silencer UOS-1
(Order code in the modular product system: SO)
- For soft-start/quick exhaust valve MS6-SV-D/E

Silencer UOS-1-LF
- For soft-start/quick exhaust valve MS6-SV-D/E

Note
The space-saving silencer UOS-1-LF may only be used for applications with low exhaust rates. Pneumatic connection 2 at the soft-start/quick exhaust valve MS6-SV-D/E must be reduced to G1/4 by a connecting plate MS6-AGB.


UOS-1


UOS-1-LF

Technical data	
Pneumatic connection	G1
Design	Open silencer
Type of mounting	With male thread
Mounting position	Any
Type of seal on screwed trunnion	No seal
Noise level	75 dB(A)

Operating and environmental conditions		
Operating pressure	[MPa]	0 ... 1
	[bar]	0 ... 10
Operating medium		Compressed air to ISO 8573-1:2010 [–:–:–]
Ambient temperature	[°C]	–10 ... +50
Corrosion resistance class CRC[1)]		2

1) More information: www.festo.com/x/topic/crc

Materials		
Type	UOS-1	UOS-1-LF
Housing	POM	Wrought aluminium alloy
Sleeve	Wrought aluminium alloy	–
Silencer insert	PE	
Note on materials	RoHS-compliant	
LABS (PWIS) conformity	VDMA24364-B1/B2-L	

Dimensions

Download CAD data ➔ www.festo.com

UOS-1

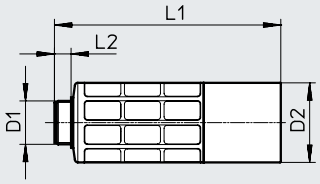

UOS-1-LF

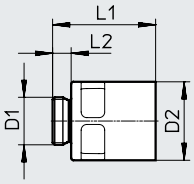

Type	D1	D2 ø	L1	L2
UOS-1	G1	55	156.5	11.5
UOS-1-LF			72.2	13

Ordering data				
Description		Weight [g]	Part no.	Type
For MS6-SV-D/E	For high exhaust rate	200	**552252**	**UOS-1**
	For low exhaust rate	157.9	**1901207**	**UOS-1-LF**

Accessories

Covering MS-SV-MH/MK
(Order code in the modular product system: MH/MK)
- For soft-start/quick exhaust valve MS6/9-SV-C

Note on materials:
RoHS-compliant

LABS (PWIS) conformity:
VDMA24364-B1/B2-L


MS6-SV-C-MK

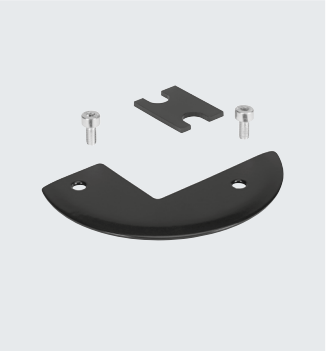
MS9-SV-MK


MS9-SV-MH

Ordering data

Description		CRC[1]	Part no.	Type
For MS6-SV-C	Tamper protection for manual override at the soft-start/quick exhaust valve, flow control screw, setting screw for pressure switchover point and manual override at the pilot solenoid valve	2	**8001479**	**MS6-SV-C-MK**
For MS9-SV-C	Tamper protection for manual override at the soft-start/quick exhaust valve, flow control screw, setting screw for pressure switchover point and manual override at the pilot solenoid valve	2	**1457669**	**MS9-SV-MK**
	Tamper protection for manual override at the soft-start/quick exhaust valve and manual override at the pilot solenoid valve	2	**1457670**	**MS9-SV-MH**

1) Corrosion resistance class. More information: www.festo.com/x/topic/crc

Accessories

Ordering data – Silencer U-...-B

Datasheets ➔ Internet: u

	Description	Pneumatic connection	Order code in the modular product system	Part no.	Type
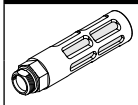	For MS6-SV-C	G3/4	S	**6845**	**U-3/4-B**
	For MS9-SV-C	G1	S	**151990**	**U-1-B**

Ordering data – Proximity switch SMT

Datasheets ➔ Internet: smt

	Description	Switching output	Switching element function	Electrical connection	Cable length [m]	Order code in the modular product system	Part no.	Type
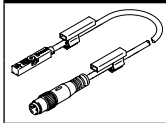	For MS6-SV-D	PNP	N/O	Cable with M8x1 plug, 3-pin	0.3	2M8/S3	**574334**	**SMT-8M-A-PS-24V-E-0.3-M8D**
				Cable with M12x1 plug, 3-pin	0.3	2M12/S3	**574337**	**SMT-8M-A-PS-24V-E-0.3-M12**
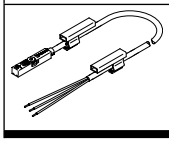	For MS6-SV-D	PNP	N/O	Cable, 3-wire	5	2OE/S3	**574336**	**SMT-8M-A-PS-24V-E-5.0-OE**

Ordering data – Plug socket MSSD

Datasheets ➔ Internet: mssd

	Description	Electrical connection	Type of mounting for cable connection	Part no.	Type
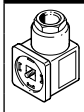	For MS6-SV-C/D	3-pin	Clamping screws	**151687**	**MSSD-EB**
		4-pin	Insulation displacement technology	**192745**	**MSSD-EB-S-M14**
		3-pin	Clamping screws	**539712**	**MSSD-EB-M12**
	For MS9-SV-C	3-pin	Clamping screws	**34583**	**MSSD-C**
		4-pin	Insulation displacement technology	**192748**	**MSSD-C-S-M16**

Ordering data – Plug socket with cable KMEB/Connecting cable KMC

Datasheets ➔ Internet: kmeb, kmc

	Description	Operating voltage	Electrical connection	Switching status indication	Cable length [m]	Part no.	Type
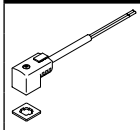	For MS6-SV-C/D	24 V DC	2-pin	LED	2.5	**547268**	**KMEB-3-24-2.5-LED**
					5	**547269**	**KMEB-3-24-5-LED**
				–	2.5	**547270**	**KMEB-3-24-2.5**
					5	**547271**	**KMEB-3-24-5**
			3-pin	LED	2.5	**151688**	**KMEB-1-24-2.5-LED**
					5	**151689**	**KMEB-1-24-5-LED**
					10	**193457**	**KMEB-1-24-10-LED**
		230 V AC	3-pin	–	2.5	**151690**	**KMEB-1-230AC-2.5**
					5	**151691**	**KMEB-1-230AC-5**
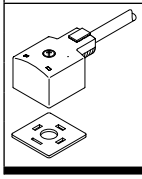	For MS9-SV-C	24 V DC	3-pin	LED	2.5	**30931**	**KMC-1-24DC-2.5-LED**
					5	**30933**	**KMC-1-24DC-5-LED**
					10	**193459**	**KMC-1-24-10-LED**
		230 V AC	3-pin	–	2.5	**30932**	**KMC-1-230AC-2.5**
					5	**30934**	**KMC-1-230AC-5**

Accessories

Ordering data – Illuminating seal MEB-LD/MC-LD

Datasheets → Internet: meb, mc

	Description	Operating voltage range	Part no.	Type
	For plug socket with cable KMEB and plug socket MSSD-EB	12 ... 24 V DC	**151717**	**MEB-LD-12-24DC**
		230 V DC/AC ±10%	**151718**	**MEB-LD-230AC**
	For connecting cable KMC and plug socket MSSD-C	12 ... 24 V DC	**19145**	**MC-LD-12-24DC**
		230 V DC/AC ±10%	**19146**	**MC-LD-230AC**

Ordering data – Connecting cable NEBA-M8

Datasheets → Internet: neba

	Electrical connection	Number of cores	Cable length [m]	Part no.	Type
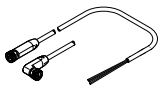	M8x1, straight socket	3	2,5	★ **8078223**	**NEBA-M8G3-U-2.5-N-LE3**
			5	★ **8078224**	**NEBA-M8G3-U-5-N-LE3**
	M8x1, angled socket	3	2,5	★ **8078230**	**NEBA-M8W3-U-2.5-N-LE3**
			5	★ **8078231**	**NEBA-M8W3-U-5-N-LE3**

Ordering data – Connecting cable NEBA-M12

Datasheets → Internet: neba

	Electrical connection	Number of cores	Cable length [m]	Part no.	Type
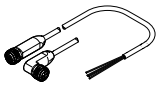	M12x1, straight socket	4	2,5	★ **8078239**	**NEBA-M12G5-U-2.5-N-LE4**
			5	★ **8078240**	**NEBA-M12G5-U-5-N-LE4**
	M12x1, angled socket	4	2,5	**8078248**	**NEBA-M12W5-U-2.5-N-LE4**
			5	**8078249**	**NEBA-M12W5-U-5-N-LE4**

Ordering data – Sensor socket NECB

Datasheets → Internet: necb

	Electrical connection	Part no.	Type
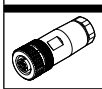	M12x1, A-coded to EN 61076-2-101	**8162290**	**NECB-M12G4-C2**

Ordering data – Angled plug socket NECB

Datasheets → Internet: necb

	Electrical connection	Part no.	Type
	M12x1, A-coded to EN 61076-2-101	**8162292**	**NECB-M12W4-C2**

Ordering data – Pressure gauge MA

	Nominal size	Pneumatic connection	Display range [bar]	Display range [psi]	Part no.	Type
	**Pressure gauge MA, EN 837-1**					Datasheets → Internet: ma
	40	R1/4	0 ... 16	0 ... 232	**187080**	**MA-40-16-R1/4-EN**
		G1/4	0 ... 16	0 ... 232	**183901**	**MA-40-16-G1/4-EN**
	Pressure gauge MA, EN 837-1, with red/green range					Datasheets → Internet: ma
	50	R1/4	0 ... 16	–	**525729**	**MA-50-16-R1/4-E-RG**