Linear drives DLGF

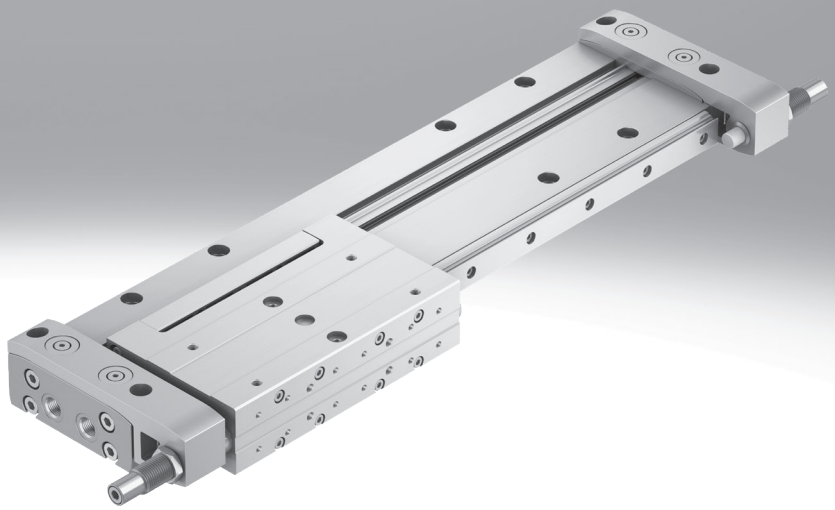

Key features

At a glance

- Very flat, rodless drive
- Enabling very space-saving installation
- Three pneumatic connection options:
  - On the left
  - On the right
  - At both ends
  - Alternatively, also from below
- Choice of two cushioning types:
  - PPS cushioning
  - External hydraulic shock absorbers
- Loads and machining jigs can be directly mounted on the slide
- For DLGF-KF: two complete customer interfaces ➔ page 13

Comparison of linear drive DLGF and linear drive DGC

Recirculating ball bearing guide DLGF-KF

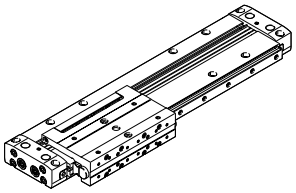

- Piston ⌀ 20 ... 40 mm
- Stroke lengths from 50 ... 1000 mm
- For small and medium loads
- Operating behaviour under torque load = very good
- Much smaller installation dimensions (approx. –46%)

Recirculating ball bearing guide DGC-KF

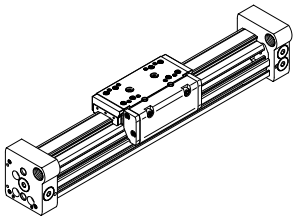

- Piston ⌀ 8 ... 63 mm
- Stroke lengths from 1 ... 8500 mm
- Guide backlash = 0 mm
- For medium and larger loads
- Operating behaviour under torque load = very good

Basic design DLGF-G

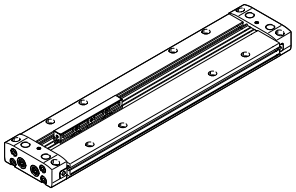

- Piston ⌀ 20 ... 40 mm
- Stroke lengths from 50 ... 1000 mm
- Low moving dead weight
- Much smaller installation dimensions (approx. –42%)

Compact design DGC-K

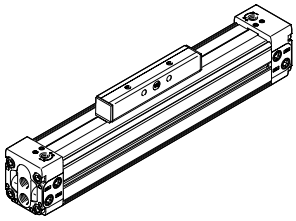

- Piston ⌀ 18 ... 80 mm
- Stroke lengths from 1 ... 8500 mm
- Low moving dead weight
- Symmetrical design

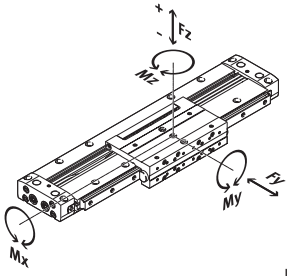

	Piston ⌀ [mm]	Theoretical force at 6 bar [N]	Guide characteristics						➔ Page/ Internet
			Fy [N]	Fz+ [N]	Fz– [N]	Mx [Nm]	My [Nm]	Mz [Nm]	
Recirculating ball bearing guide DLGF-KF									
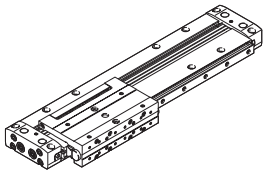	20	188	600	400	700	5.4	15	15	9
	25	295	1000	700	1200	12.3	30	30	
	32	483	1300	950	1600	30	50	50	
	40	754	1700	1150	2000	54	90	90	
Basic design DLGF-G									
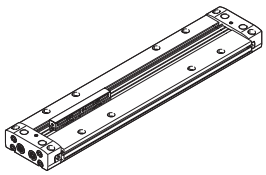	20	188	–	54	98	0.6	2.2	0.7	20
	25	295	–	95	164	1.1	4.5	1.4	
	32	483	–	138	276	1.8	7.6	2.9	
	40	754	–	456	662	7.7	37.6	11.2	

Key features

Application examples

As a space-optimised pick-and-place unit

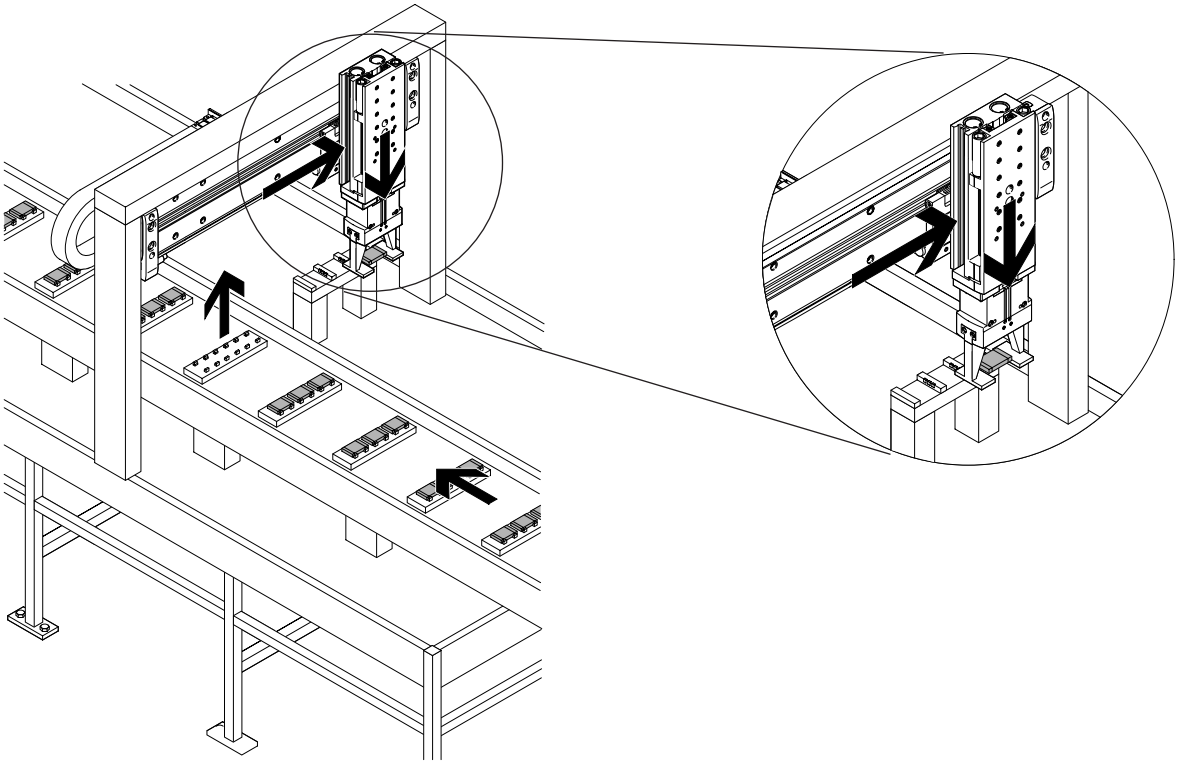

As a long-stroke gripper

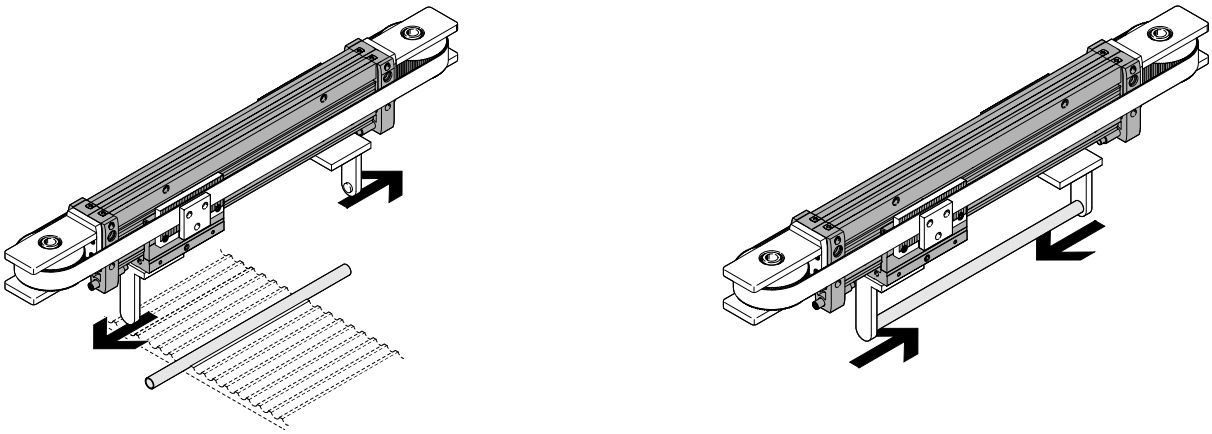

Key features

Compressed air supply variants

Supply ports at both ends:

On the end:
Option 1:
[1] Slide moves to the left
[4] Slide moves to the right
Option 2:
[3] Slide moves to the left
[2] Slide moves to the right

From below:
Option 1:
[6] Slide moves to the left
[7] Slide moves to the right
Option 2:
[8] Slide moves to the left
[5] Slide moves to the right

Supply port at one end:

On the end:
Option 1:
[1] Slide moves to the left
[2] Slide moves to the right
Option 2:
[3] Slide moves to the left
[4] Slide moves to the right

From below:
Option 1:
[6] Slide moves to the left
[5] Slide moves to the right
Option 2:
[8] Slide moves to the left
[7] Slide moves to the right

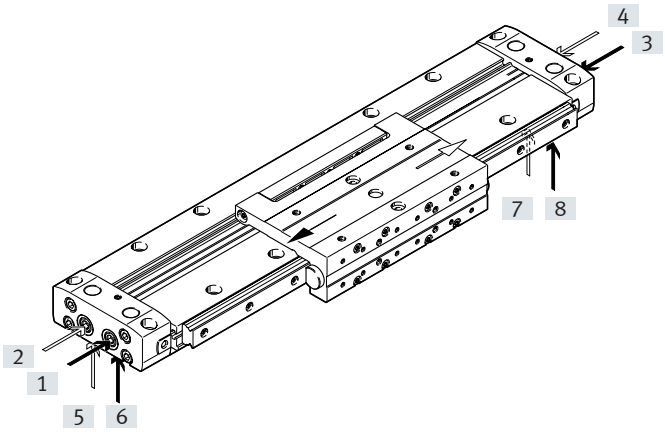

Connection variants from below

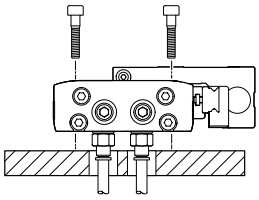

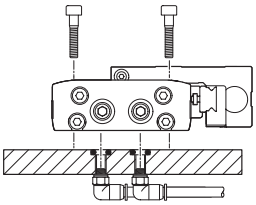

Suitable O-rings:
For piston ø 20: ø 5x2
For piston ø 25: ø 12x2
For piston ø 32: ø 12x2
For piston ø 40: ø 16x2

Profile design

With mounting holes

- In the end cap: yes
- In the profile: yes

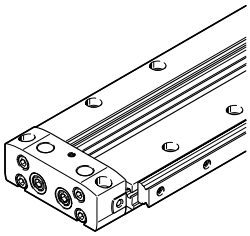

Without mounting holes

- In the end cap: yes
- In the profile: no

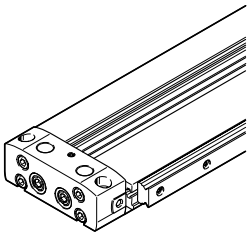

The maximum support spacing is 300 mm. For longer strokes, the drive must be supported accordingly.

Key features

Easy preassembly of the proximity switches

The magnet [1] for sensing the slide position is located in the centre of the slide. The cross [2] on the proximity switch SMT-8M-A marks the location of the switching point. The switching point is set when both locations are at the same level [3].

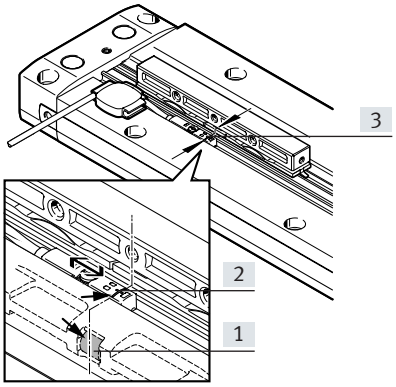

Influence of ferritic materials on proximity switches

Ferritic materials (steel parts or panels) in the immediate vicinity of the proximity switches can cause sensing malfunctions. The following safety distances must be observed.
No ferritic materials should be used in the shaded area [1].

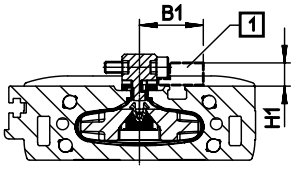

Piston ø	B1	H1
20	22	8
25	22	8
32	27	13
40	27	13

Possible installation variants

With profile mounting DAMH-L8-P

Slide on the left

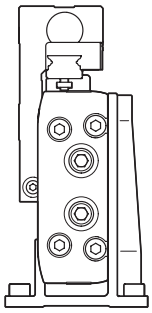

Slide on the top

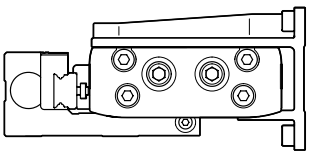

Slide on the right

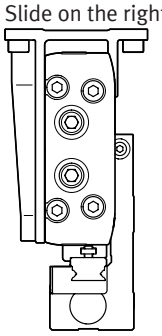

Key features

Possible installation variants

With profile mountings DAMH-L8-PL and DAMH-L8-P

Application example:
Easy implementation of an intermediate position using two linear drives DLGF “back to back”

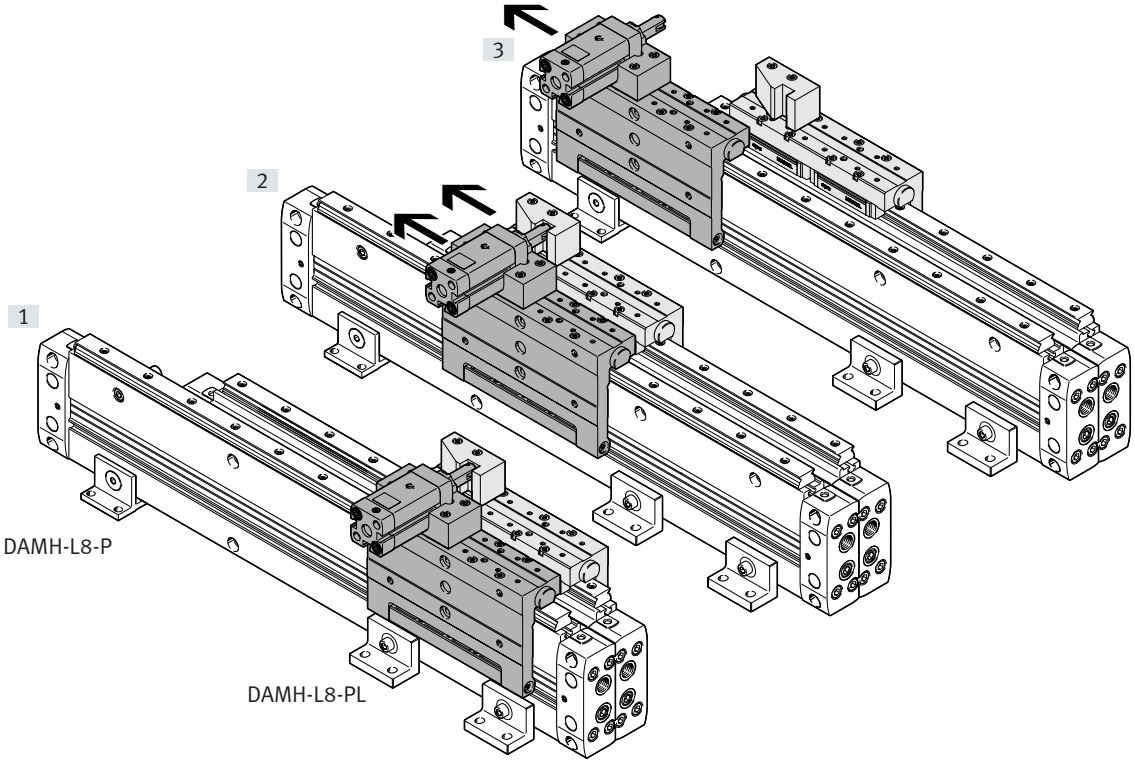

[1] Both linear drives are in the initial position on the right. The stopper cylinder on the slide of the linear drive on the left is normally extended and thus locks the slide of the linear drive on the right.

[2] The linear drive on the right is supplied with compressed air and takes the drive on the left with it as it moves. On reaching the end position of the linear drive on the right, the intermediate position is approached.

[3] By supplying compressed air to the stopper cylinder, the two slides are released. The linear drive on the left is then supplied with compressed air and moves to its end position.

Key features

Possible installation variants

Number of matching mounting holes on the cover to attach the profile mountings DAMH-L8-PL

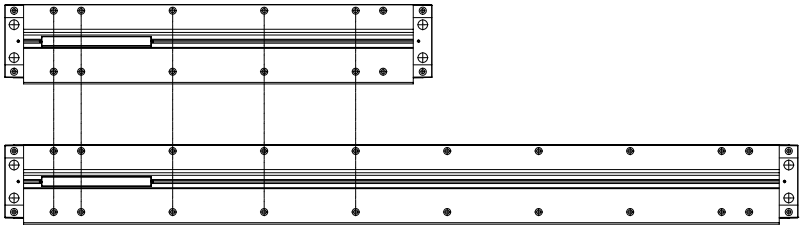

For piston ⌀ 20, 25, 32

Stroke [mm]	50	100	150	200	250	300	350	400	450	500	550	600	650	700	750	800	850	900	950	1000
50	3																			
100		3																		
150			3																	
200	2			4																
250		2			4															
300			2			4														
350	2			3			5													
400		2			3			5												
450			2			3			5											
500	2			3			4			6										
550		2			3			4			6									
600			2			3			4			6								
650	2			3			4			5			7							
700		2			3			4			5			7						
750			2			3			4			5			7					
800	2			3			4			5			6			8				
850		2			3			4			5			6			8			
900			2			3			4			5			6			8		
950	2			3			4			5			6			7			9	
1000		2			3			4			5			6			7			9

For piston ⌀ 40

Stroke [mm]	50	100	150	200	250	300	350	400	450	500	550	600	650	700	750	800	850	900	950	1000
50	5																			
100		5																		
150			5																	
200	3			5																
250		3			5															
300			3			5														
350	3			4			6													
400		3			4			6												
450			3			4			6											
500	3			4			5			7										
550		3			4			5			7									
600			3			4			5			7								
650	3			4			5			6			8							
700		3			4			5			6			8						
750			3			4			5			6			8					
800	3			4			5			6			7			9				
850		3			4			5			6			7			9			
900			3			4			5			6			7			9		
950	3			4			5			6			7			8			10	
1000		3			4			5			6			7			8			10

Type codes

001	Series	
DLGF	Linear drive	

002	Guide	
KF	Recirculating ball bearing guide	
G	Basic variant	

003	Piston diameter	
20	20	
25	25	
32	32	
40	40	

004	Stroke	
50	50	
100	100	
150	150	
200	200	
250	250	
300	300	
350	350	
400	400	
450	450	
500	500	
550	550	
600	600	
650	650	
700	700	
750	750	
800	800	
850	850	
900	900	
950	950	
1000	1000	

005	Cushioning	
PPS	Pneumatic cushioning, self-adjusting at both ends	

006	Position sensing	
A	For proximity sensor	

007	Profile design	
	With mounting holes	
W	Without mounting holes	

Peripherals overview

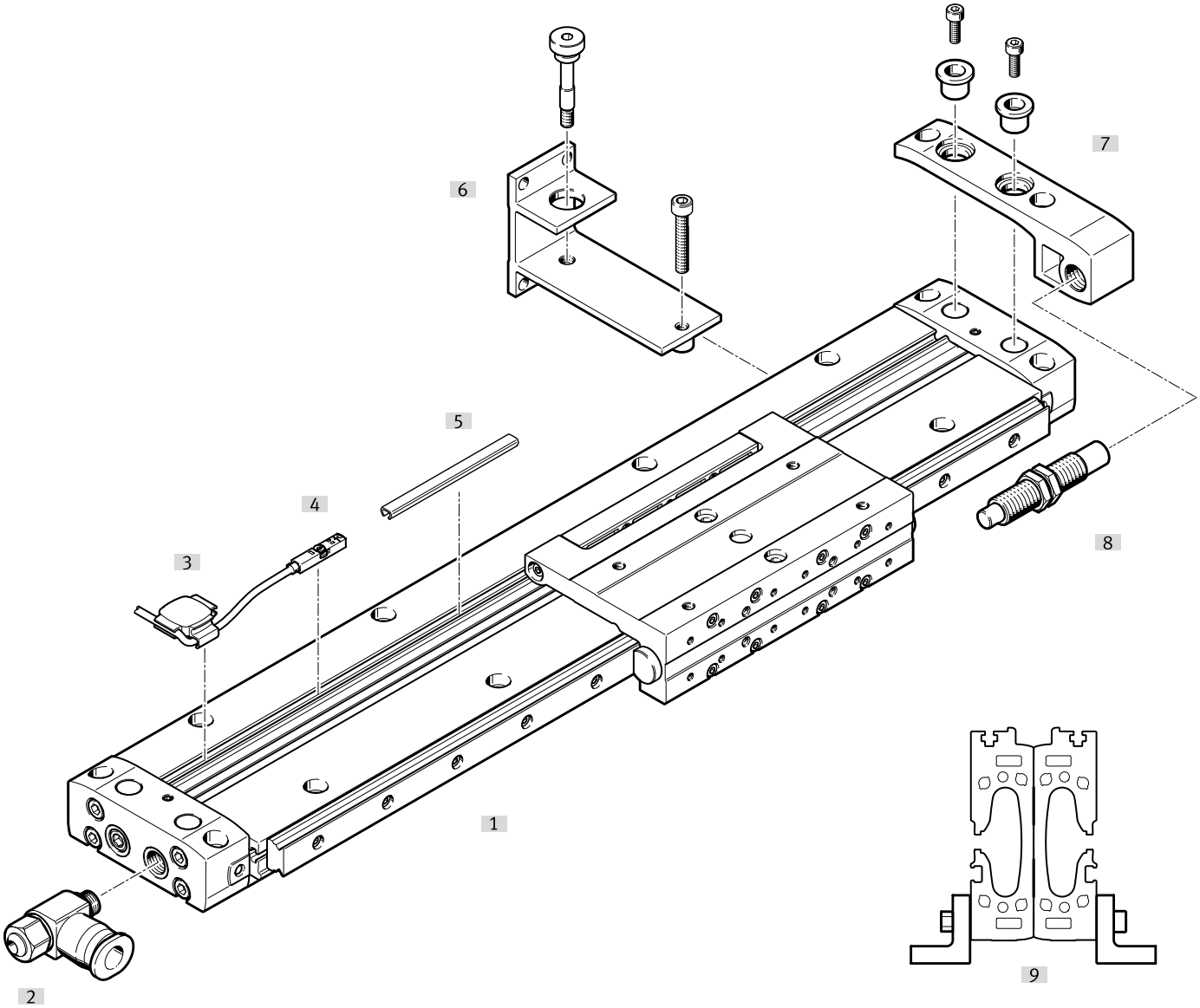

Accessories

	Type/order code	Description	→ Page/Internet
[1]	Linear drives DLGF-KF	With recirculating ball bearing guide	10
[2]	One-way flow control valve GRLA	For regulating speed	35
[3]	Cable holder DADG	For fitting the proximity switch cable	35
[4]	Proximity switch SMT-8M	For sensing the moment compensator position	35
[5]	Slot cover ABP-5-S1	For protection against contamination	35
[6]	Profile mounting DAMH-L8-P	For mounting the linear drive in a vertical position	30
[7]	Shock absorber retainer DAYP-L8	For mounting the shock absorbers on the linear drive Must be ordered separately as an accessory	34
[8]	Shock absorber DYSS	Self-adjusting hydraulic shock absorber with spring return and progressive cushioning characteristics Must be ordered separately as an accessory	34
[9]	Profile mounting DAMH-L8-PL	For mounting two linear drives back to back in a vertical position	31

Datasheet

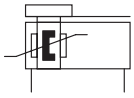

- Ø - Size
  20 ... 40
- l - Stroke length
  50 ... 1000 mm

General technical data					
Piston Ø		20	25	32	40
Design		Rodless actuator			
Driver principle		Positive-locking (slot)			
Guide		Recirculating ball bearing guide			
Operating mode		Double-acting			
Stroke					
Standard stroke	[mm]	100, 150, 200, 250, 300, 350, 400, 500, 600		200, 300, 400, 500, 600	
Modular product system[1]	[mm]	50 ... 1000			
Pneumatic connection		M5	G1/8	G1/8	G1/4
Cushioning		Pneumatic cushioning, self-adjusting at both ends			
Cushioning length	[mm]	9.6	9	11.6	12.9
Min. speed	[m/s]	0.07			
Max. speed	[m/s]	1.5			
Repetition accuracy	[mm]	±0.05			
Position sensing		Via proximity switch			
Type of mounting		Direct mounting via through-hole			
		With accessories			
Mounting position		Any			

1) The drive can only be ordered in 50 mm increments.

Operating and environmental conditions					
Piston Ø		20	25	32	40
Operating pressure	[bar]	2 ... 8	1.5 ... 8		
Operating medium		Compressed air to ISO 8573-1:2010 [7:–:–]			
Note on the operating/pilot medium		Lubricated operation possible (in which case lubricated operation will always be required)			
Ambient temperature	[°C]	0 ... 60			
Corrosion resistance class CRC[1]		1 - Low corrosion stress			

1) More information www.festo.com/x/topic/crc

Forces and impact energy					
Piston Ø		20	25	32	40
Theoretical force at 6 bar	[N]	188	295	483	754
Impact energy in the end positions					
DLGF-...-PPS	[J]	0.17	0.27	0.44	0.69
DLGF-... with shock absorber	[J]	2	3	6	10

Datasheet

Weight [g] Piston ø	20	25	32	40
Basic weight with 0 mm stroke	1015	1640	2829	5585
Additional weight per 10 mm stroke	35.5	45.5	69.4	105.5
Moving mass	566	998	1622	3300

Materials

Sectional view

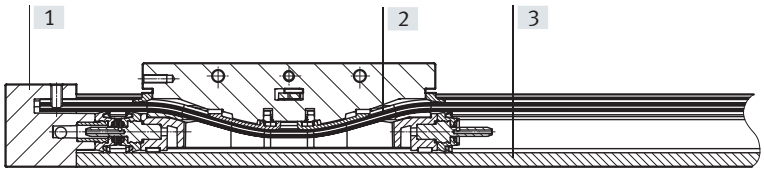

Linear drive		
[1]	Cover	Coated die-cast aluminium
[2]	Seals	NBR
		TPE-U(PU)
[3]	Housing	Anodised aluminium
–	Note on materials	RoHS-compliant
		Free of copper
	LABS (PWIS) conformity	VDMA24364-B1/B2-L

Direct mounting

In order to avoid strain, the drive must be mounted at varying intervals depending on the length. The maximum support spacing is 300 mm.

Appropriate support should therefore also be used for the variant without mounting holes (feature W).

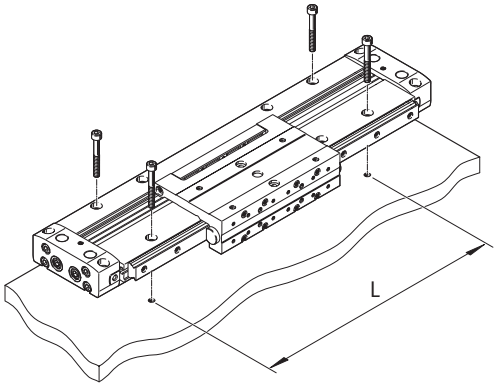

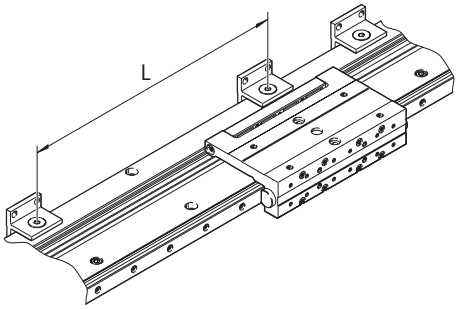

Stroke [mm]	Number of pairs of screws DLGF-20	DLGF-25	DLGF-32	DLGF-40
50 ... 150	2	2	2	2
200	2	2	2	3
250	2	2	3	3
300	3	3	3	3
350 ... 450	3	3	3	4
500 ... 600	4	4	4	4
650 ... 750	4	4	4	5
800 ... 1000	5	5	5	5

Datasheet

Load values

The indicated forces and torques refer to the centre of the slide surface.
These values must not be exceeded during dynamic operation.
Special attention must be paid to the deceleration phase.

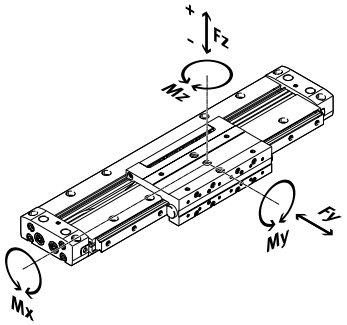

If the drive is simultaneously subjected to several of the forces and torques indicated below, the following equation must be satisfied in addition to the indicated maximum loads:

$$f_v = \frac{|F_{y1}|}{F_{y2}} + \frac{|F_{z1}|}{F_{z2}} + \frac{|M_{x1}|}{M_{x2}} + \frac{|M_{y1}|}{M_{y2}} + \frac{|M_{z1}|}{M_{z2}} \leq 1$$

F_1/M_1 = dynamic value
F_2/M_2 = maximum value

Permissible forces and torques					
Piston ⌀		20	25	32	40
$Fy_{max.}$	[N]	600	1000	1300	1700
$Fz_{max.}+$	[N]	400	700	950	1150
$Fz_{max.}-$	[N]	700	1200	1600	2000
$Mx_{max.}$	[Nm]	5.4	12.3	30	54
$My_{max.}$	[Nm]	15	30	50	90
$Mz_{max.}$	[Nm]	15	30	50	90

Maximum permissible speed v as a function of payload m

With PPS cushioning

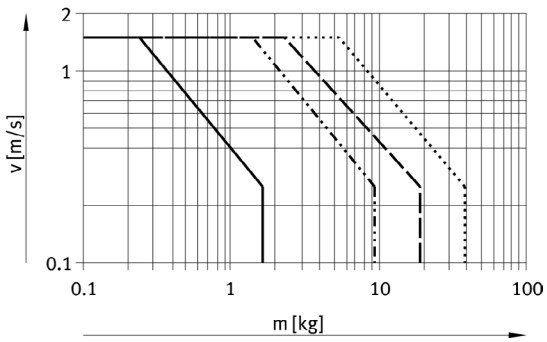

With shock absorber DYSS

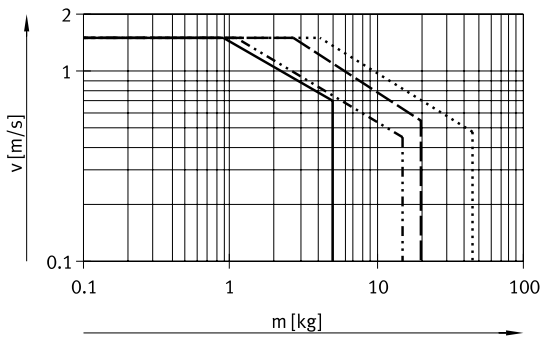

DLGF-KF-20
DLGF-KF-25
DLGF-KF-32
DLGF-KF-40

Datasheet

Direct mounting using Festo components or connection by the customer

With mini slide DGST or DGSL

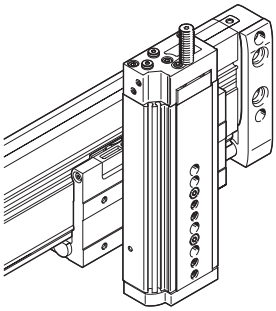

For connection by the customer

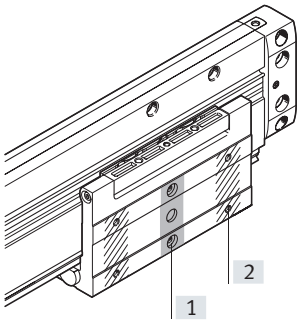

[1] Interface for DGST/DGSL
[2] Available interface

Linear drive DLGF	Mini slides DGST	Mini slides DGSL		Retaining screws	Connector sleeve for DGSL
Piston ⌀	Piston ⌀	Piston ⌀	Minimum stroke [mm]		
20	10	8	30	M4	–
	12[1]	10	20		
25, 32	16	12	30	M5	ZBV-9-7
		16	20		
40	20[2]	20	20	M6	ZBV-12-9
	25[2]	25	20		

1) Not with stroke 10 mm
2) Not with centring sleeve ZBH

With compact cylinder ADN or ADNGF

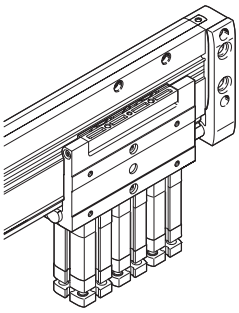

For connection by the customer

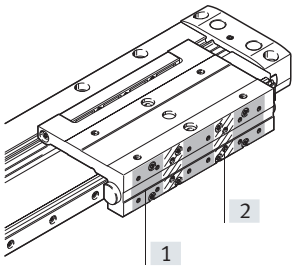

[1] Interface for ADN/ADNGF
[2] Available interface

Linear drive DLGF	Compact cylinder ADN/ADNGF		Retaining screws
Piston ⌀	Piston ⌀	Max. stroke	
20	12	20	M3
25	16	20	M3
32	20	40	M4
40	25	50	M4

Datasheet

Dimensions Download CAD data ➔ www.festo.com

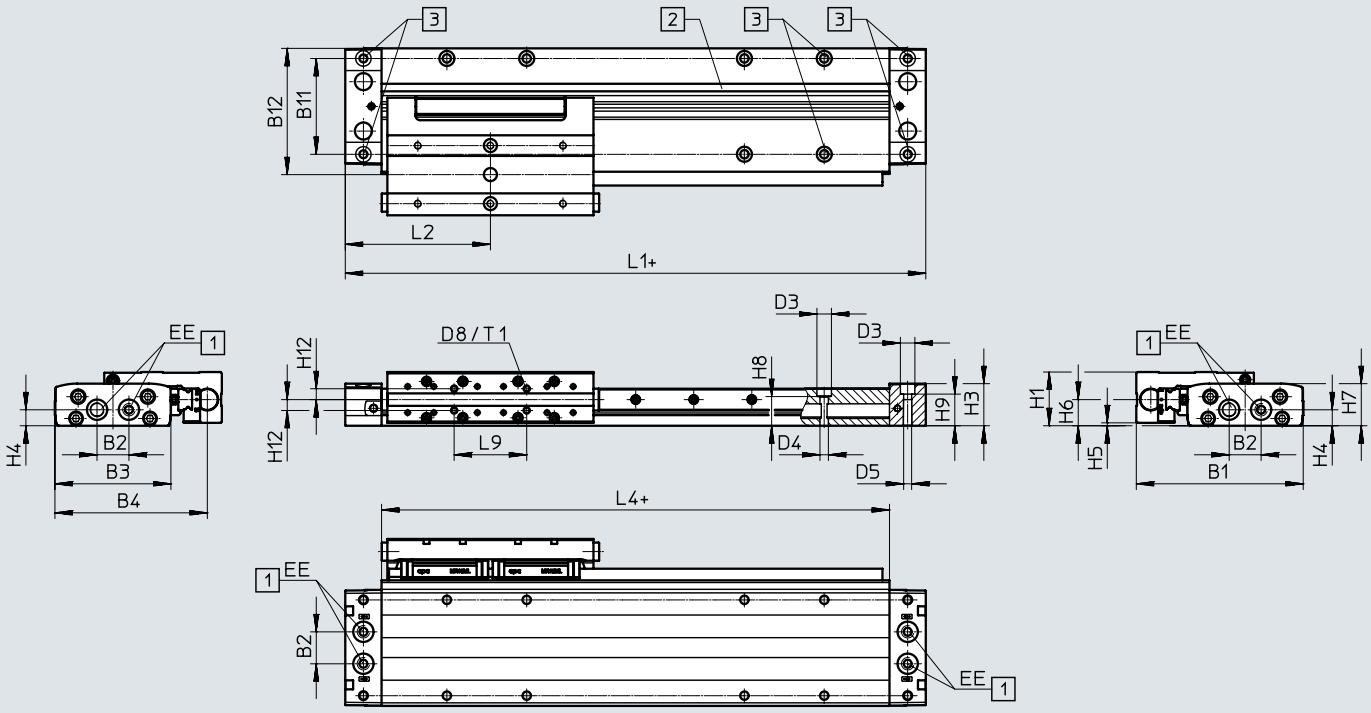

+ plus stroke length
[1] Supply ports
[2] Sensor slot for proximity switch
[3] Mounting holes for accessories
➔ page 30, 31
[4] Mounting holes

Suitable O-rings for supply ports below:
For piston ø 20: ø 5x2
For piston ø 25: ø 12x2
For piston ø 32: ø 12x2
For piston ø 40: ø 16x2

ø [mm]	B1	B2	B3	B4	B11	B12	D3 ø	D4 ø
20	105	17	71.8	95	60	78	8	4.7
25	115	22	79.8	105	66	87	10	5.8
32	145	26	99.6	134.5	82	115	11	6.8
40	175	32	119.8	160.5	100	141	11	6.8

ø [mm]	D5 ø	D8	EE	H1	H3	H4	H5	H6	H7
20	4.5	M4	M5	32	21	9	1.5	15	24
25	5.5	M4	G1/8	37	25.5	11	2	18	29
32	6.5	M5	G1/8	45	32	14	2	19	35
40	6.6	M6	G1/4	52	39.5	19.5	3	24	42.7

ø [mm]	H8	H9	H12	L1 ±0.35	L2	L4	L9	T1	Stroke tolerance
20	15.6	17.6	7.5	160	80	120	45	7	+1.5
25	20.1	21.8	7.5	200	100	150	50	9	
32	24.6	26.5	10	230	115	170	80	10	
40	32.1	34.7	12.5	300	150	238.8	125	10	

Datasheet

Dimensions Download CAD data ➔ www.festo.com

Mounting holes

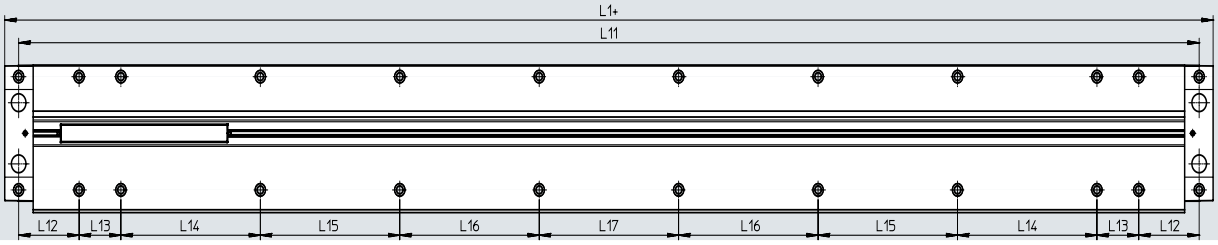

Dim.	L1				L11				L12				L13			
ø	20	25	32	40	20	25	32	40	20	25	32	40	20	25	32	40
Stroke																
50	210	250	280	350	190	225	250	320	55	57.5	65	65	40	55	60	20
100	260	300	330	400	240	275	300	370					65	80	80	45
150	310	350	380	450	290	325	350	420					90	105	110	70
200	360	400	430	500	340	375	400	470					40	55	60	20
250	410	450	480	550	390	425	450	520					65	80	80	45
300	460	500	530	600	440	475	500	570					90	105	110	70
350	510	550	580	650	490	525	550	620					40	55	60	20
400	560	600	630	700	540	575	600	670					65	80	80	45
450	610	650	680	750	590	625	650	720					90	105	110	70
500	660	700	730	800	640	675	700	770					40	55	60	20
550	710	750	780	850	690	725	750	820					65	80	80	45
600	760	800	830	900	740	775	800	870					90	105	110	70
650	810	850	880	950	790	825	850	920					40	55	60	20
700	860	900	930	1000	840	875	900	970					65	80	80	45
750	910	950	980	1050	890	925	950	1020					90	105	110	70
800	960	1000	1030	1100	940	975	1000	1070					40	55	60	20
850	1010	1050	1080	1150	990	1025	1050	1120					65	80	80	45
900	1060	1100	1130	1200	1040	1075	1100	1170					90	105	110	70
950	1110	1150	1180	1250	1090	1125	1150	1220					40	55	60	20
1000	1160	1200	1230	1300	1140	1175	1200	1370					65	80	80	45

Dim.	L14				L15				L16				L17			
ø	20	25	32	40	20	25	32	40	20	25	32	40	20	25	32	40
Stroke																
50	–	–	–	75	–	–	–	–	–	–	–	–	–	–	–	–
100																
150																
200				150									150	150	150	
250																
300																
350	150	150	150	150	–	–	–	–	–	–	–	–	–	–	–	150
400																
450																
500								150					150	150	150	–
550																
600																
650	150	150	150	150	150	150	150	150	–	–	–	–	–	–	–	150
700																
750																
800												150	150	150	150	–
850																
900																
950	150	150	150	150	150	150	150	150	150	150	150	150	–	–	–	150
1000																

Datasheet

Dimensions Download CAD data ➔ www.festo.com

Slide

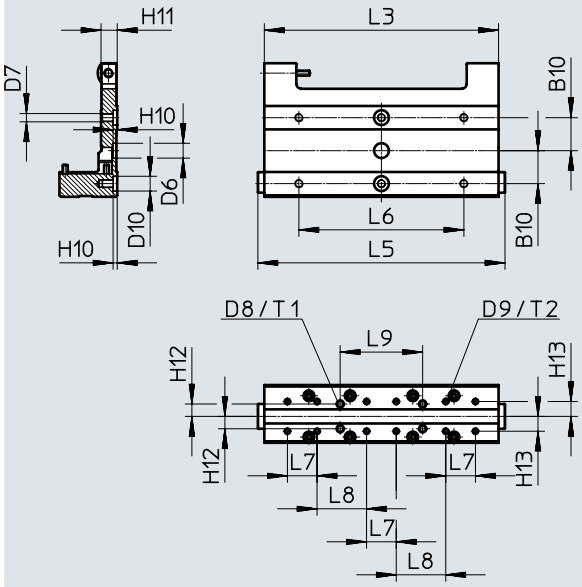

ø [mm]	B10	D6 ø H7	D7	D8	D9	D10 ø H7	H10	H11	H12
20	20	7	M4	M4	M3	7	1.6	8.8	7.5
25	20	9	M5	M4	M3	9	2	9.8	7.5
32	20	9	M5	M5	M4	9	2	10.3	10
40	20	–	M6	M6	M4	12	2.6	10.3	12.5

ø [mm]	H13	L3	L5	L6	L7	L8	L9	T1	T2
20	8	112	119.8	64	16	20	45	7	7
25	9	142	149.8	100	18	30	50	9	7
32	11	161	170	100	22	35	80	10	7.5
40	13	230.6	239.6	140	26	62	125	10	8

Datasheet

Dimensions Download CAD data ➔ www.festo.com

Profile barrel

ø 20

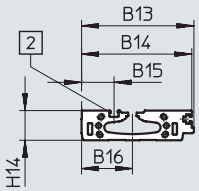

ø 25

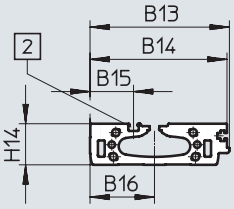

ø 32

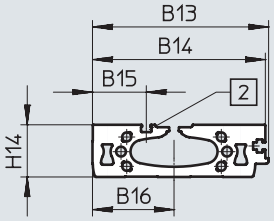

ø 40

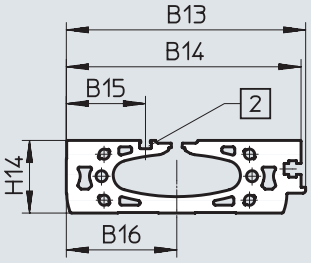

[2] Sensor slot for proximity switch

ø [mm]	B13	B14	B15	B16	H14
20	79.5	78	23	36	21
25	86.5	85	27	40	25.5
32	108	106	33	50	32
40	130	127.5	43	60	39.5

Datasheet

Ordering data

	Piston ø	Stroke [mm]	Part no.	Type
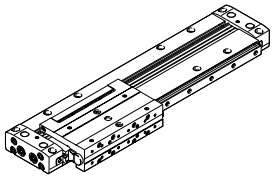	20	100	**5074938**	**DLGF-KF-20-100-PPSA**
		150	**5074939**	**DLGF-KF-20-150-PPSA**
		200	**5074940**	**DLGF-KF-20-200-PPSA**
		250	**5074941**	**DLGF-KF-20-250-PPSA**
		300	**5074942**	**DLGF-KF-20-300-PPSA**
		350	**5074943**	**DLGF-KF-20-350-PPSA**
		400	**5074944**	**DLGF-KF-20-400-PPSA**
		500	**5074946**	**DLGF-KF-20-500-PPSA**
		600	**5074948**	**DLGF-KF-20-600-PPSA**
	25	100	**5072370**	**DLGF-KF-25-100-PPSA**
		150	**5072371**	**DLGF-KF-25-150-PPSA**
		200	**5072372**	**DLGF-KF-25-200-PPSA**
		250	**5072373**	**DLGF-KF-25-250-PPSA**
		300	**5072374**	**DLGF-KF-25-300-PPSA**
		350	**5072375**	**DLGF-KF-25-350-PPSA**
		400	**5072376**	**DLGF-KF-25-400-PPSA**
		500	**5072378**	**DLGF-KF-25-500-PPSA**
		600	**5072380**	**DLGF-KF-25-600-PPSA**
	32	200	**5074802**	**DLGF-KF-32-200-PPSA**
		300	**5074804**	**DLGF-KF-32-300-PPSA**
		400	**5074806**	**DLGF-KF-32-400-PPSA**
		500	**5074808**	**DLGF-KF-32-500-PPSA**
		600	**5074810**	**DLGF-KF-32-600-PPSA**
	40	200	**5074756**	**DLGF-KF-40-200-PPSA**
		300	**5074758**	**DLGF-KF-40-300-PPSA**
		400	**5074760**	**DLGF-KF-40-400-PPSA**
		500	**5074762**	**DLGF-KF-40-500-PPSA**
		600	**5074764**	**DLGF-KF-40-600-PPSA**

Ordering data – Modular product system

	20	25	32	40	Condi-tions	Code		Enter code
Module no.	**8063799**	**8063800**	**8063801**	**8063802**				
Function	Linear drives					**DLGF**		DLGF
Guide	Recirculating ball bearing guide					**-KF**		-KF
Piston ø [mm]	20	25	32	40		**-...**		
Stroke [mm]	50, 100, 150, 200, 250, 300, 350, 400, 450, 500, 550, 600, 650, 700, 750, 800, 850, 900, 950, 1000					**-...**		
Cushioning	Pneumatic cushioning, self-adjusting at both ends					**-PPS**		-PPS
Position sensing	Via proximity switch					**A**		A
Profile design	With mounting holes							
	Without mounting holes					**-W**		

Peripherals overview

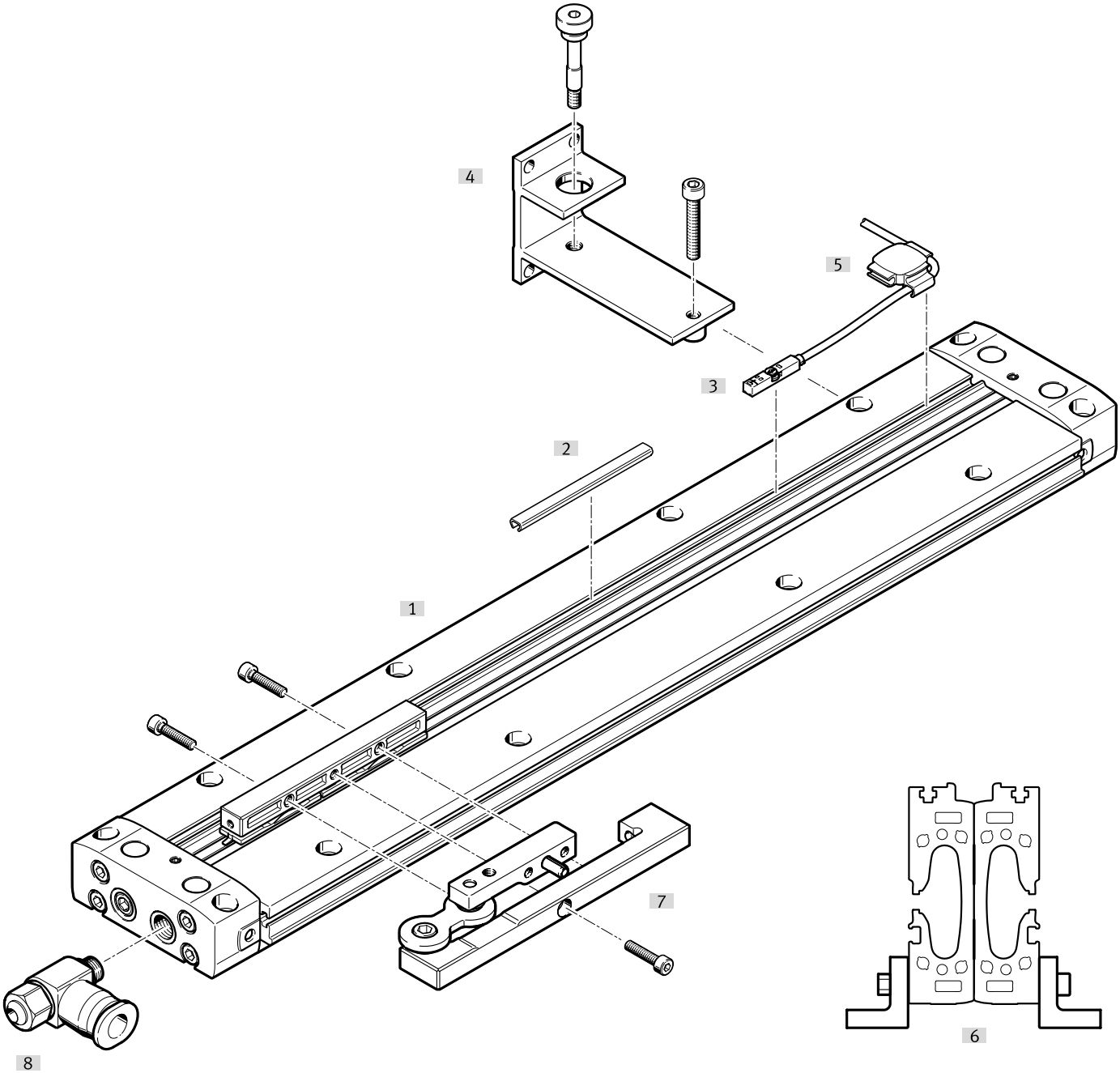

Peripherals overview

Accessories			
	Type/order code	Description	➔ Page/Internet
[1]	Linear drives DLGF-G	Basic design	22
[2]	Slot cover ABP-5-S1	For protection against contamination	35
[3]	Proximity switch SMT-8M	For sensing the moment compensator position	35
[4]	Profile mounting DAMH-L8-P	For mounting the linear drive in a vertical position	30
[5]	Cable holder DADG	For fitting the proximity switch cable	35
[6]	Profile mounting DAMH-L8-PL	For mounting two linear drives back to back in a vertical position	31
[7]	Moment compensator DARD-L8	For compensating misalignments when using external guides	32
[8]	One-way flow control valve GRLA	For regulating speed	35

Datasheet

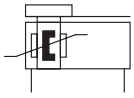

- Ø - Size
  20 ... 40
- l - Stroke length
  50 ... 1000 mm

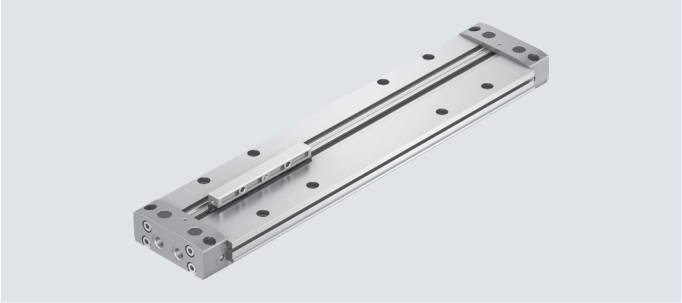

General technical data					
Piston Ø		20	25	32	40
Design		Rodless actuator			
Driver principle		Positive-locking (slot)			
Guide		Basic design			
Operating mode		Double-acting			
Stroke					
Standard stroke	[mm]	100, 150, 200, 250, 300, 350, 400, 500, 600		200, 300, 400, 500, 600	
Modular product system[1]	[mm]	50 ... 1000			
Pneumatic connection		M5	G1/8	G1/8	G1/4
Cushioning		Pneumatic cushioning, self-adjusting at both ends			
Cushioning length	[mm]	9.6	9	11.6	12.9
Min. speed	[m/s]	0.07			
Max. speed	[m/s]	1.5			
Repetition accuracy	[mm]	±0.05			
Position sensing		Via proximity switch			
Type of mounting		Direct mounting via through-hole			
		With accessories			
Mounting position		Any			

1) The drive can only be ordered in 50 mm increments.

Operating and environmental conditions					
Piston Ø		20	25	32	40
Operating pressure	[bar]	2 ... 8	1.5 ... 8		
Operating medium		Compressed air to ISO 8573-1:2010 [7:–:–]			
Note on the operating/pilot medium		Lubricated operation possible (in which case lubricated operation will always be required)			
Ambient temperature	[°C]	0 ... 60			
Corrosion resistance class CRC[1]		1 - Low corrosion stress			

1) More information www.festo.com/x/topic/crc

Forces and impact energy					
Piston Ø		20	25	32	40
Theoretical force at 6 bar	[N]	188	295	483	754
Impact energy in the end positions	[J]	0.17	0.27	0.44	0.69

Weight [g]					
Piston Ø		20	25	32	40
Basic weight with 0 mm stroke		590	957	1703	3234
Additional weight per 10 mm stroke		28.2	35.3	54.7	80.6
Moving mass		66	110	208	450

Datasheet

Operating range of the cushioning

The end-position cushioning is adjusted to ensure jerk-free operation. If the operating conditions are outside the permissible range, the moving mass must be cushioned using suitable equipment (external shock absorbers), preferably at the centre of mass.
The values apply to:
- horizontal mounting position
- Payload at top

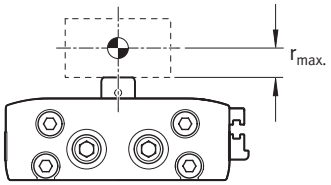

Piston ø		20	25	32	40
Distance $r_{max.}$	[mm]	6	6	8	8

Materials

Sectional view

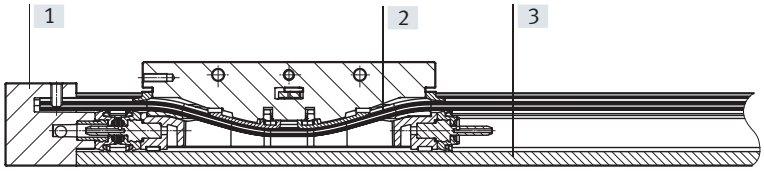

Linear drive		
[1]	Cover	Coated die-cast aluminium
[2]	Seals	NBR
		TPE-U(PU)
[3]	Housing	Anodised aluminium
–	Note on materials	RoHS-compliant
		Free of copper
	LABS (PWIS) conformity	VDMA24364-B1/B2-L

Direct mounting

In order to avoid strain, the drive must be mounted at varying intervals depending on the length. The maximum support spacing is 300 mm.

Appropriate support should therefore also be used for the variant without mounting holes (feature W).

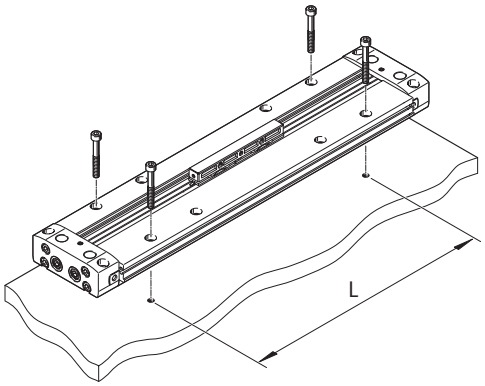

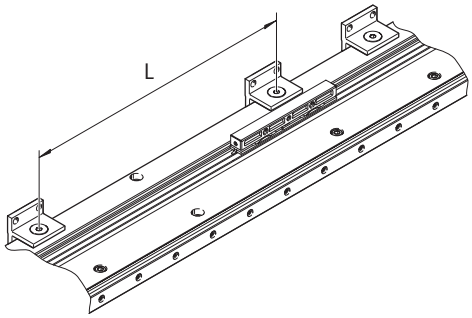

Stroke [mm]	Number of pairs of screws DLGF-20	DLGF-25	DLGF-32	DLGF-40
50 ... 150	2	2	2	2
200	2	2	2	3
250	2	2	3	3
300	3	3	3	3
350 ... 450	3	3	3	4
500 ... 600	4	4	4	4
650 ... 750	4	4	4	5
800 ... 1000	5	5	5	5

Datasheet

Load values

The indicated forces and torques refer to the centre of the moment compensator.
These values must not be exceeded during dynamic operation.
Special attention must be paid to the deceleration phase.

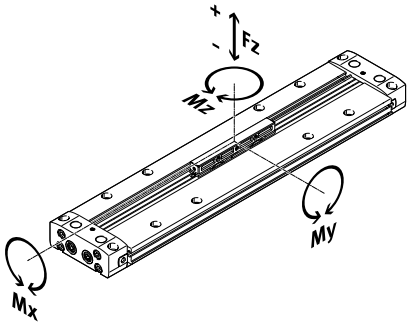

If the drive is simultaneously subjected to several of the forces and torques indicated below, the following equation must be satisfied in addition to the indicated maximum loads:

$$0{,}4 \cdot \frac{F_{z1}}{F_{z2}} + \frac{M_{x1}}{M_{x2}} + \frac{M_{y1}}{M_{y2}} + 0{,}2 \cdot \frac{M_{z1}}{M_{z2}} \leq 1$$

$$\frac{F_{z1}}{F_{z2}} \leq 1 \qquad \frac{M_{z1}}{M_{z2}} \leq 1$$

F_1/M_1 = dynamic value
F_2/M_2 = maximum value

Permissible forces and torques					
Piston ⌀		20	25	32	40
$Fz_{max.}+$	[N]	54	95	138	456
$Fz_{max.}-$	[N]	98	164	276	662
$Mx_{max.}$	[Nm]	0.6	1.1	1.8	7.7
$My_{max.}$	[Nm]	2.2	4.5	7.6	37.6
$Mz_{max.}$	[Nm]	0.7	1.4	2.9	11.2

Maximum permissible speed v as a function of payload m

With PPS cushioning

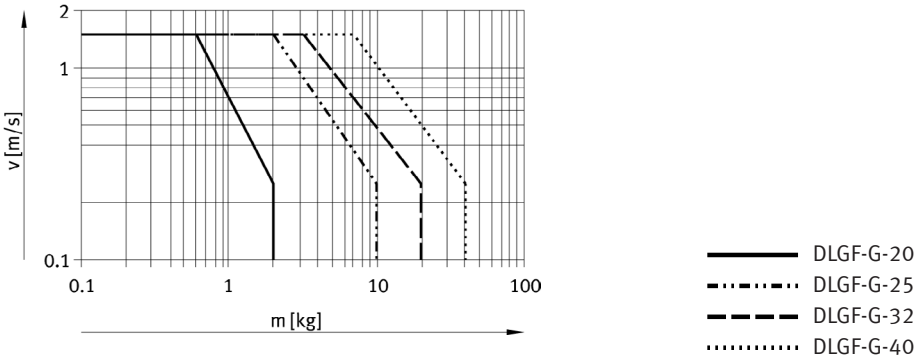

Datasheet

Dimensions Download CAD data ➔ www.festo.com

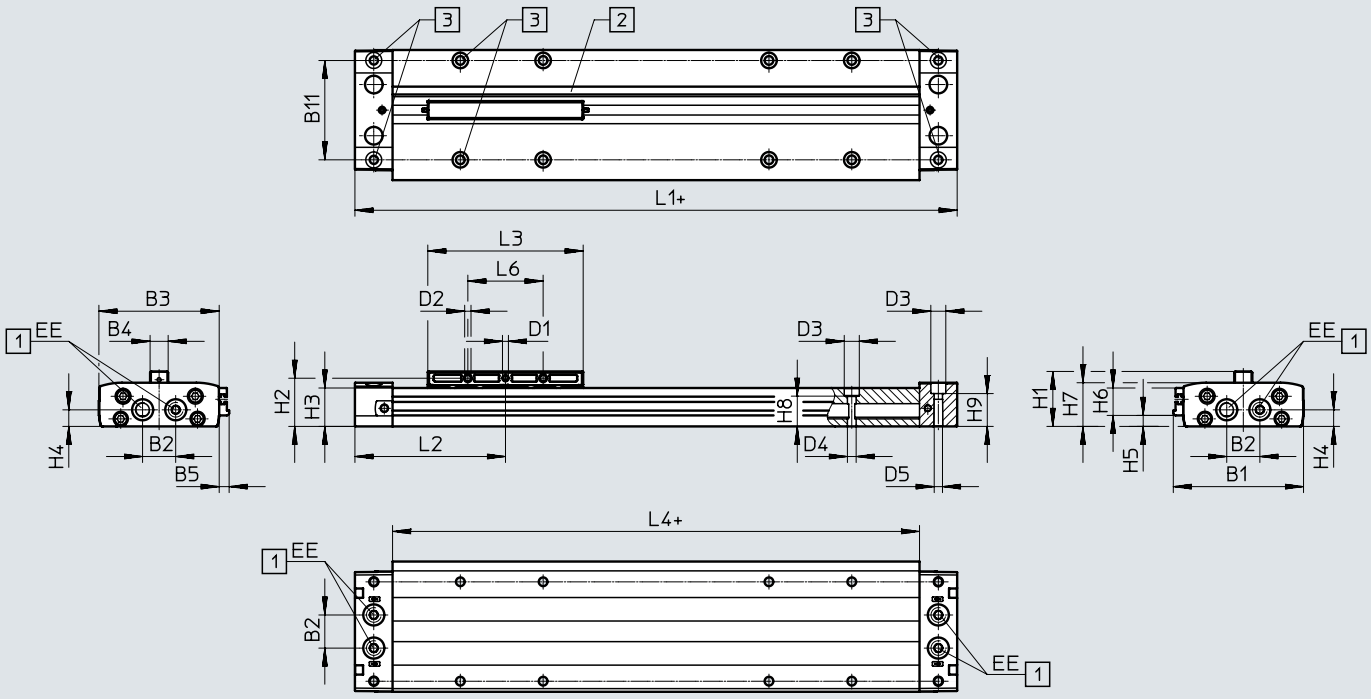

+	plus stroke length
[1]	Supply ports
[2]	Sensor slot for proximity switch
[3]	Mounting holes for accessories ➔ page 30, 31
[4]	Mounting holes

Suitable O-rings for supply ports below:
For piston ø 20: ø 5x2
For piston ø 25: ø 12x2
For piston ø 32: ø 12x2
For piston ø 40: ø 16x2

ø [mm]	B1	B2	B3	B4	B5	B11	D1	D2 ø	D3 ø
20	79.5	17	71.8	12	7.6	60	M4	4.2	8
25	86.5	22	79.8	12	6.6	66	M4	4.2	10
32	108	26	99.6	16	8.2	82	M4	4.2	11
40	130	32	119.8	16	10.1	100	M4	4.2	11

ø [mm]	D4 ø	D5 ø	EE	H1	H2	H3	H4	H5	H6
20	4.7	4.5	M5	31.5	27	21	9	5	16
25	5.8	5.5	G1/8	36.5	32	25.5	11	7.3	18.2
32	6.8	6.5	G1/8	44.5	40	32	14	8.1	23.9
40	6.8	6.6	G1/4	51.5	46.5	39.5	19.5	10.8	28.7

ø [mm]	H7	H8	H9	L1 ±0.35	L2	L3	L4	L6	Stroke tolerance
20	24	15.6	17.6	160	80	87.6	120	40	+1.5
25	29	20.1	21.8	200	100	103.2	150	50	
32	35	24.6	26.5	230	115	121.6	170	60	
40	42.7	32.1	34.7	300	150	180	238.8	70	

Datasheet

Dimensions Download CAD data ➔ www.festo.com

Mounting holes

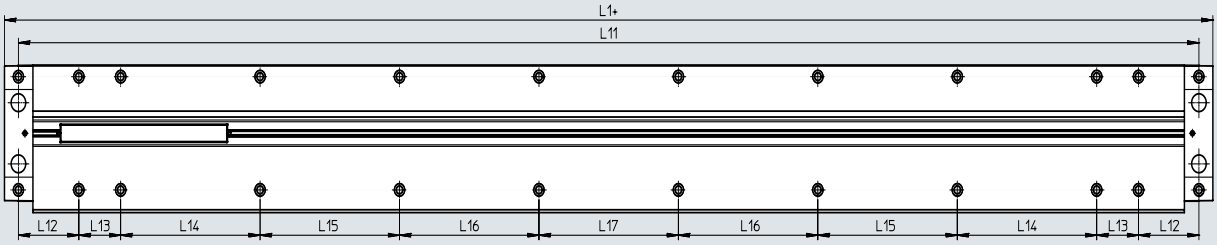

Dim.	L1				L11				L12				L13			
ø Stroke	20	25	32	40	20	25	32	40	20	25	32	40	20	25	32	40
50	210	250	280	350	190	225	250	320	55	57.5	65	65	40	55	60	20
100	260	300	330	400	240	275	300	370					65	80	80	45
150	310	350	380	450	290	325	350	420					90	105	110	70
200	360	400	430	500	340	375	400	470					40	55	60	20
250	410	450	480	550	390	425	450	520					65	80	80	45
300	460	500	530	600	440	475	500	570					90	105	110	70
350	510	550	580	650	490	525	550	620					40	55	60	20
400	560	600	630	700	540	575	600	670					65	80	80	45
450	610	650	680	750	590	625	650	720					90	105	110	70
500	660	700	730	800	640	675	700	770					40	55	60	20
550	710	750	780	850	690	725	750	820					65	80	80	45
600	760	800	830	900	740	775	800	870					90	105	110	70
650	810	850	880	950	790	825	850	920					40	55	60	20
700	860	900	930	1000	840	875	900	970					65	80	80	45
750	910	950	980	1050	890	925	950	1020					90	105	110	70
800	960	1000	1030	1100	940	975	1000	1070					40	55	60	20
850	1010	1050	1080	1150	990	1025	1050	1120					65	80	80	45
900	1060	1100	1130	1200	1040	1075	1100	1170					90	105	110	70
950	1110	1150	1180	1250	1090	1125	1150	1220					40	55	60	20
1000	1160	1200	1230	1300	1140	1175	1200	1370					65	80	80	45

Dim.	L14				L15				L16				L17			
ø Stroke	20	25	32	40	20	25	32	40	20	25	32	40	20	25	32	40
50	–	–	–	75	–	–	–	–	–	–	–	–	–	–	–	–
100																
150																
200				150									150	150	150	
250																
300																
350	150	150	150	150	–	–	–	–	–	–	–	–	–	–	–	150
400																
450																
500								150					150	150	150	–
550																
600																
650	150	150	150	150	150	150	150	150	–	–	–	–	–	–	–	150
700																
750																
800												150	150	150	150	–
850																
900																
950	150	150	150	150	150	150	150	150	150	150	150	150	–	–	–	150
1000																

Datasheet

Dimensions Download CAD data ➔ www.festo.com

Profile barrel

ø 20

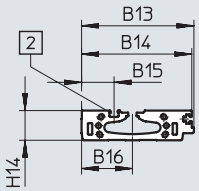

ø 25

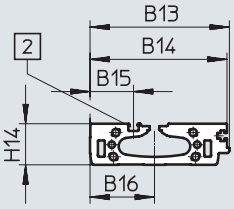

ø 32

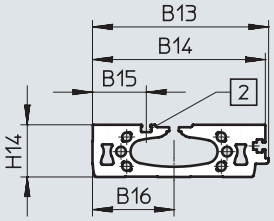

ø 40

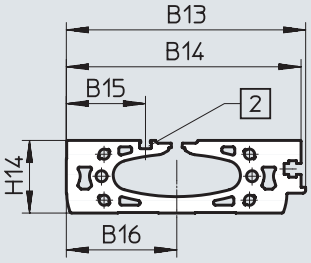

[2] Sensor slot for proximity switch

ø [mm]	B13	B14	B15	B16	H14
20	79.5	78	23	36	21
25	86.5	85	27	40	25.5
32	108	106	33	50	32
40	130	127.5	43	60	39.5

Datasheet

Ordering data

	Piston ø	Stroke [mm]	Part no.	Type
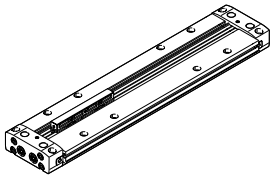	20	100	**5074918**	**DLGF-G-20-100-PPSA**
		150	**5074919**	**DLGF-G-20-150-PPSA**
		200	**5074920**	**DLGF-G-20-200-PPSA**
		250	**5074921**	**DLGF-G-20-250-PPSA**
		300	**5074922**	**DLGF-G-20-300-PPSA**
		350	**5074923**	**DLGF-G-20-350-PPSA**
		400	**5074924**	**DLGF-G-20-400-PPSA**
		500	**5074926**	**DLGF-G-20-500-PPSA**
		600	**5074928**	**DLGF-G-20-600-PPSA**
	25	100	**5072350**	**DLGF-G-25-100-PPSA**
		150	**5072351**	**DLGF-G-25-150-PPSA**
		200	**5072352**	**DLGF-G-25-200-PPSA**
		250	**5072353**	**DLGF-G-25-250-PPSA**
		300	**5072354**	**DLGF-G-25-300-PPSA**
		350	**5072355**	**DLGF-G-25-350-PPSA**
		400	**5072356**	**DLGF-G-25-400-PPSA**
		500	**5072358**	**DLGF-G-25-500-PPSA**
		600	**5072360**	**DLGF-G-25-600-PPSA**
	32	200	**5074782**	**DLGF-G-32-200-PPSA**
		300	**5074784**	**DLGF-G-32-300-PPSA**
		400	**5074786**	**DLGF-G-32-400-PPSA**
		500	**5074788**	**DLGF-G-32-500-PPSA**
		600	**5074790**	**DLGF-G-32-600-PPSA**
	40	200	**5074736**	**DLGF-G-40-200-PPSA**
		300	**5074738**	**DLGF-G-40-300-PPSA**
		400	**5074740**	**DLGF-G-40-400-PPSA**
		500	**5074742**	**DLGF-G-40-500-PPSA**
		600	**5074744**	**DLGF-G-40-600-PPSA**

Ordering data – Modular product system

	20	25	32	40	Condi-tions	Code		Enter code
Module no.	**8063799**	**8063800**	**8063801**	**8063802**				
Function	Linear drives					**DLGF**		DLGF
Guide	Basic design					**-G**		-G
Piston ø [mm]	20	25	32	40		**-...**		
Stroke [mm]	50, 100, 150, 200, 250, 300, 350, 400, 450, 500, 550, 600, 650, 700, 750, 800, 850, 900, 950, 1000					**-...**		
Cushioning	Pneumatic cushioning, self-adjusting at both ends					**-PPS**		-PPS
Position sensing	Via proximity switch					**A**		A
Profile design	With mounting holes							
	Without mounting holes					**-W**		

Accessories

Profile mounting DAMH-L8-P

For DLGF-G/-KF

Material:
High-alloy stainless steel
RoHS-compliant

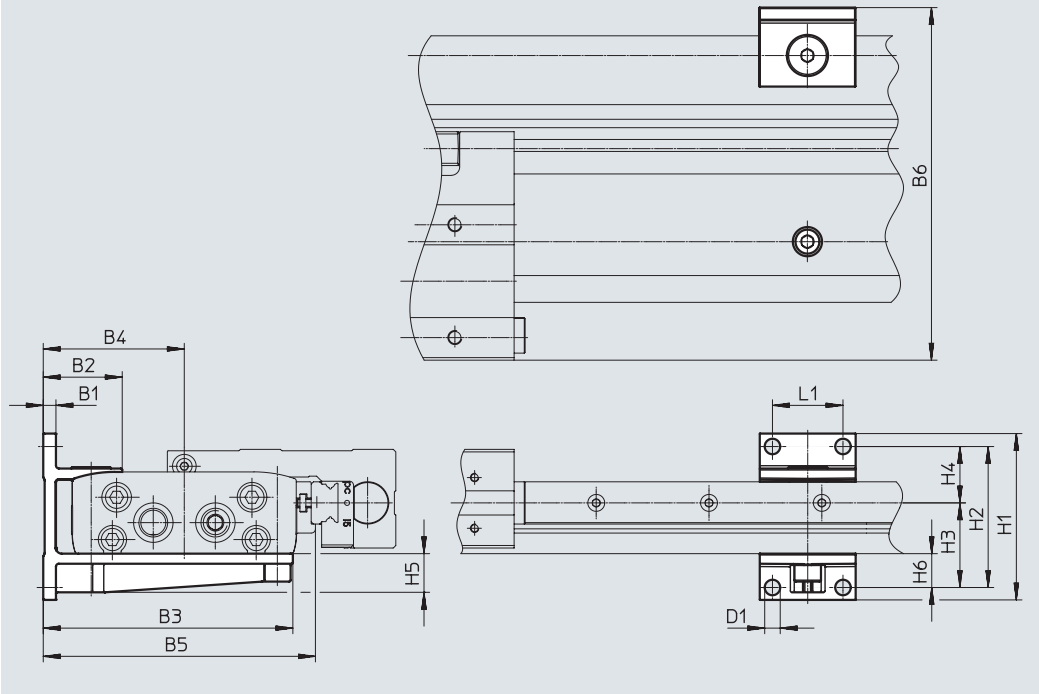

Dimensions and ordering data

For ⌀ [mm]	B1	B2	B3	B4	B5 [1]	B6 [2]	D1 ⌀	H1
20	4.5	27	80.5	46	89.5	115	4.5	50
25	4.5	28	88.5	50	96.5	125	5.5	59
32	5.5	32	108	60	118	155	6.6	73
40	5.7	33.7	127	70	140	185	6.6	80

For ⌀ [mm]	H2	H3 [2]	H4 [2]	H5	H6	L1	Weight [g]	Part no.	Type
20	40	25	15	10.7	10	25	169	**8069009**	**DAMH-L8-20-P-1**
25	50	30	20	13.7	12	25	204	**8069010**	**DAMH-L8-25-P-1**
32	60	30	30	14	11	30	373	**8069011**	**DAMH-L8-32-P-1**
40	65	35	30	14.8	11	30	438	**8069012**	**DAMH-L8-40-P-1**

1) Only in combination with DLGF-...-G
2) Only in combination with DLGF-...-KF

Accessories

Profile mounting DAMH-L8-PL
For mounting two linear drives back to back in a vertical position.

Material:
Anodised wrought aluminium alloy
RoHS-compliant

For DLGF-G/-KF

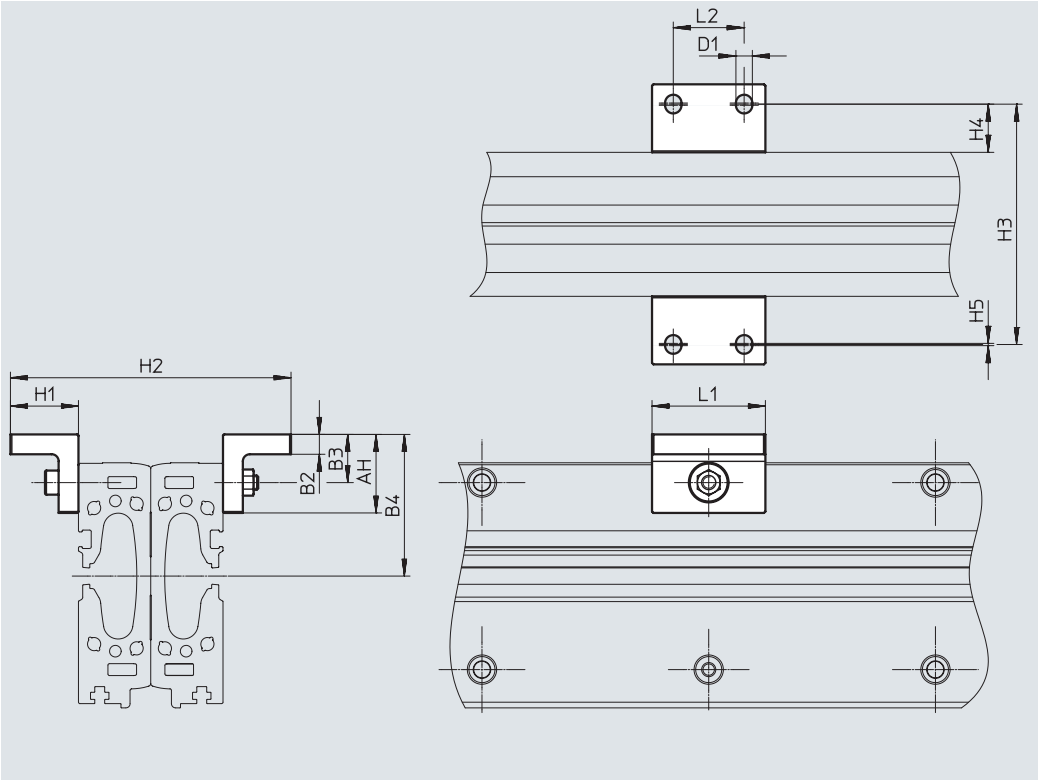

Dimensions and ordering data

For ⌀ [mm]	AH	B2	B3	B4	D1 ⌀	H1	H2	H3
20	25.2	6.5	16	46	4.6	19.5	81	70
25	27.7	7	17	50	5.8	24	99	85
32	32.5	9	19	60	6.7	26	116	100
40	32.5	9	20	70	6.7	26	131	115

For ⌀ [mm]	H4	H5	L1	L2	Weight [g]	Part no.	Type
20	14	1	35	20	64	**8069013**	**DAMH-L8-20-PL-1**
25	17	1	40	25	99	**8069014**	**DAMH-L8-25-PL-1**
32	18	1	45	30	160	**8069015**	**DAMH-L8-32-PL-1**
40	18	1	45	30	166	**8069016**	**DAMH-L8-40-PL-1**

Accessories

Moment compensator DARD-L8
For compensating misalignments when using external guides.

Material:
Anodised aluminium
RoHS-compliant

For DLGF-G

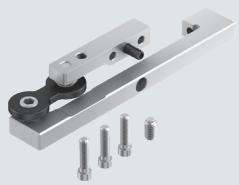

ø 20/25

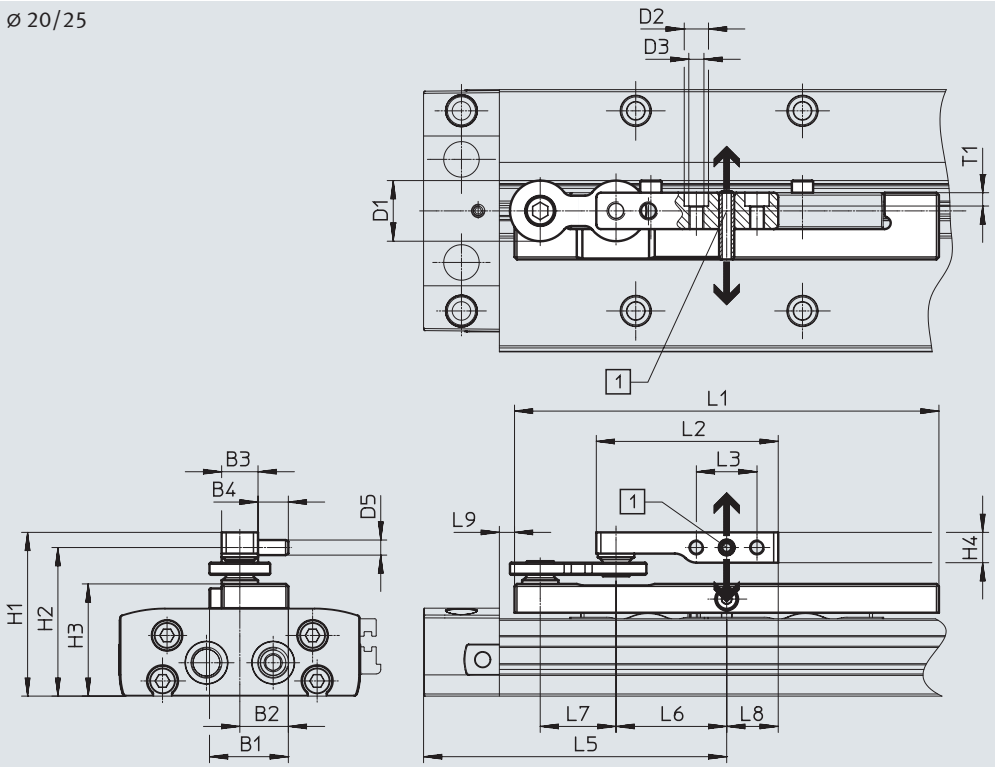

ø 32/40

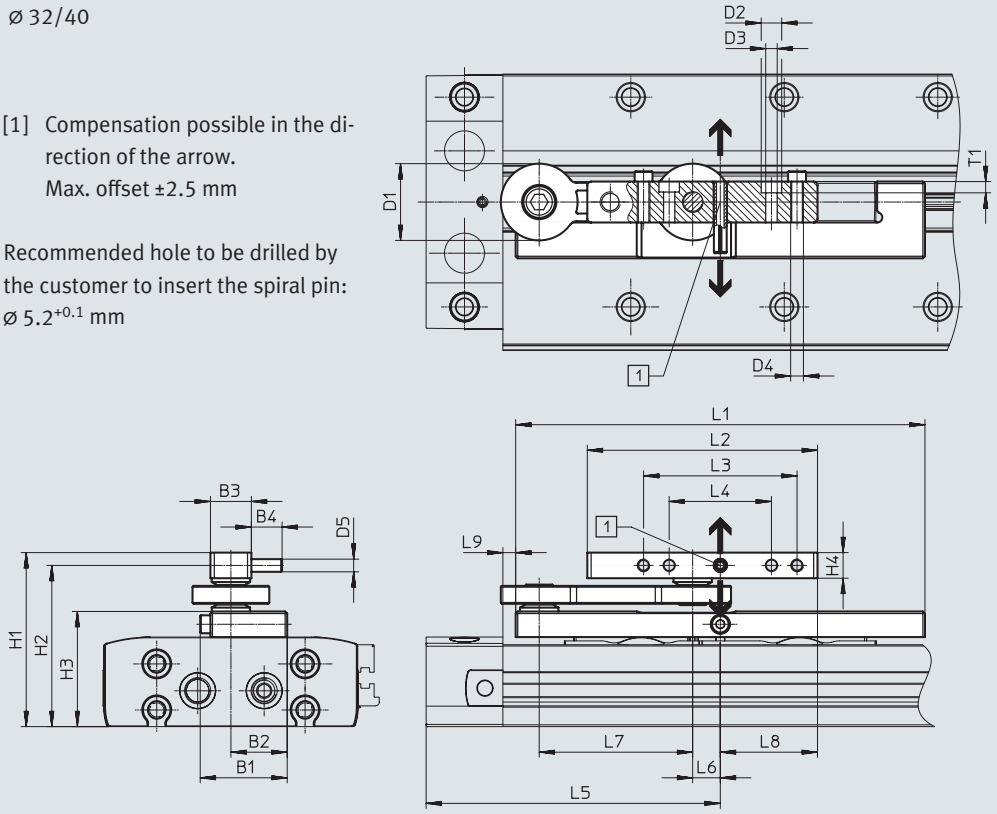

[1] Compensation possible in the direction of the arrow.
Max. offset ±2.5 mm

Recommended hole to be drilled by the customer to insert the spiral pin:
ø $5.2^{+0.1}$ mm

Accessories

Dimensions and ordering data

For ø [mm]	Max. offset between linear drive and external guide [mm]	Max. permissible load in the direction of force [N]		Ambient temperature [°C]
20, 25	±2.5	550	Low backlash	0 ... +60
32, 40	±2.5	1500		

For ø [mm]	B1	B2	B3	B4	D1 ø	D2 ø	D3	D4	D5 ø
20	26	16	12	10	20	8	M5 [2]	–	5.2
25	26	16	12	10	20	8	M5 [2]	–	5.2
32	34	22	16	12	30	8	4.5	M5	5.2
40	34	22	16	12	30	8	4.5	M5	5.2

For ø [mm]	H1	H2	H3	L1	L2	L3 ±0.1	L4 ±0.1	L5	L6
20	49	44	32	114	60	20	–	80	25.8
25	54	49	37	140	60	20	–	100	36.5
32	68	63	45	160	90	60	40	115	10.8
40	75	70	52	228	90	60	40	150	43

For ø [mm]	L7	L8	L9	T1	CRC[1]	Weight [g]	Part no.	Type
20	25	17	2.2	4.4	1	137	**8081466**	**DARD-L8-20-S**
25	25	17	5	4.4		166	**4134871**	**DARD-L8-25-S**
32	60	38	5	4.4		294	**8081467**	**DARD-L8-32-S**
40	60	38	5	4.4		440	**4448222**	**DARD-L8-40-S**

1) More information www.festo.com/x/topic/crc
2) The threaded hole can also be used as a through-hole for screws with M4 thread.

Accessories

Shock absorber retainer DAYP-L8
For shock absorber DYSS

For DLGC-KF

Material:
High-alloy stainless steel
RoHS-compliant

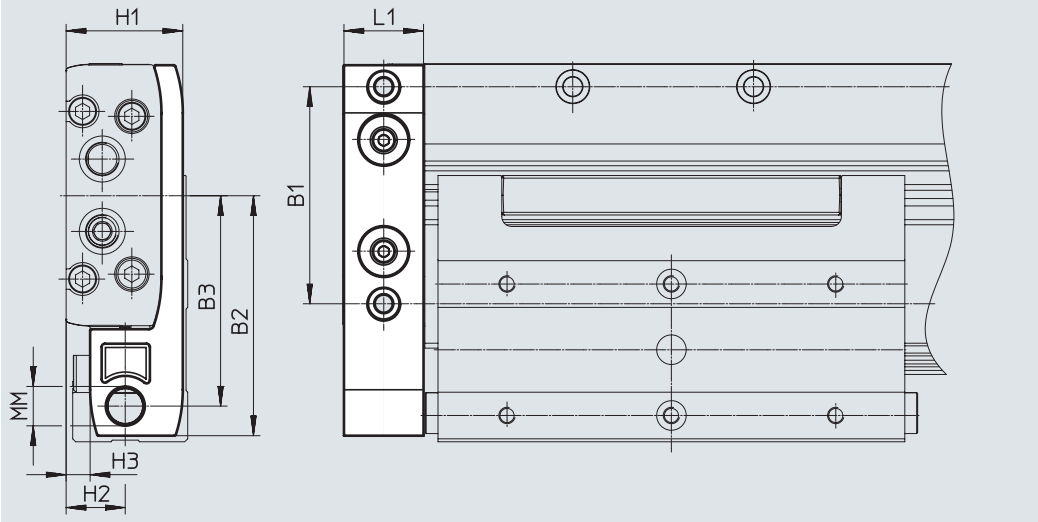

Dimensions and ordering data

For ø [mm]	B1	B2	B3	H1	H2
20	60	67.1	59	30.5	14.9
25	66	73	64	35.5	18
32	82	92.3	83.4	43.5	19
40	100	113	100.5	50.5	24

For ø [mm]	H3	L1	MM	Weight [g]	Part no.	Type
20	5	19.5	M10x1	165	**8069005**	**DAYP-L8-20**
25	7.3	24.2	M12x1	224	**8069006**	**DAYP-L8-25**
32	8	29	M14x1	429	**8069007**	**DAYP-L8-32**
40	10.8	29.5	M16x1	560	**8069008**	**DAYP-L8-40**

Stroke adjustment with the aid of the shock absorbers DYSS

The shock absorbers can be moved by up to L = 25 mm at each end. This means that the stroke can be reduced by max. 50 mm.

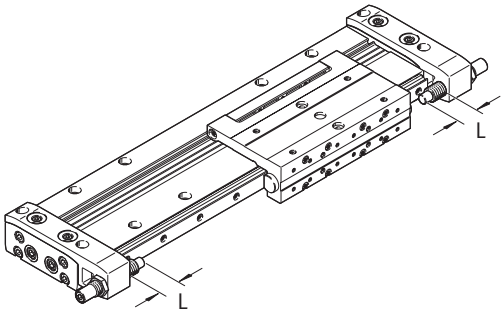

Ordering data

	For ø	Comment	Part no.	Type	PU[1]
Shock absorber DYSS					Datasheets → Internet: dyss
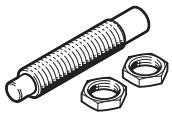	20	For DLGC-KF	**8069001**	**DYSS-7-5-Y1F**	1
	25		**8069002**	**DYSS-8-8-Y1F**	
	32		**8069003**	**DYSS-10-10-Y1F**	
	40		**8069004**	**DYSS-12-12-Y1F**	

1) Packaging unit

Accessories

Ordering data

	For ø	Comment	Part no.	Type	PU[1]
One-way flow control valve GRLA					
	20	Metal design	**193137**	**GRLA-M5-QS-3-D**	1
			193138	**GRLA-M5-QS-4-D**	
	25, 32		**193142**	**GRLA-1/8-QS-3-D**	
			193143	**GRLA-1/8-QS-4-D**	
			193144	**GRLA-1/8-QS-6-D**	
	40		**193146**	**GRLA-1/4-QS-6-D**	
			193147	**GRLA-1/4-QS-8-D**	
			193148	**GRLA-1/4-QS-10-D**	
Connector sleeve ZBV					
	25, 32	For centring in combination with direct mounting of mini slides DGSL	**548805**	**ZBV-9-7**	10
	40		**548806**	**ZBV-12-9**	
Cable holder DADG					
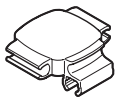	20 ... 40	For mounting the proximity switch cable at a 90° angle	**8069000**	**DADG-HL-N8-P2**	2
Slot cover ABP					
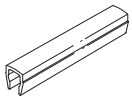	20 ... 40	For sensor slot, 0.5 mm each	**563360**	**ABP-5-S1**	2

1) Packaging unit

Ordering data – Proximity switch for T-slot, magneto-resistive

Datasheets → Internet: smt

	Type of mounting	Switching output	Electrical connection	Cable length [m]	Part no.	Type
N/O						
	Inserted in the slot from above, flush with the cylinder profile, short design	PNP	Cable, 3-core	2.5	**574335**	**SMT-8M-A-PS-24V-E-2.5-OE**
			Plug M8x1, 3-pin	0.3	**574334**	**SMT-8M-A-PS-24V-E-0.3-M8D**
		NPN	Cable, 3-core	2.5	**574338**	**SMT-8M-A-NS-24V-E-2.5-OE**
			Plug M8x1, 3-pin	0.3	**574339**	**SMT-8M-A-NS-24V-E-0.3-M8D**

Connecting cables NEBA, straight

	Electrical connection 1, connection technology	Electrical connection 2, connection technology	Electrical connection 2, number of pins/cores	Cable length	Part no.	Type
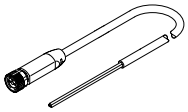	M8x1 A-coded to EN 61076-2-104	Open end	3	2.5 m	**8078223**	**NEBA-M8G3-U-2.5-N-LE3**
				5 m	**8078224**	**NEBA-M8G3-U-5-N-LE3**

Connecting cables NEBA, angled

	Electrical connection 1, connection technology	Electrical connection 2, connection technology	Electrical connection 2, number of pins/cores	Cable length	Part no.	Type
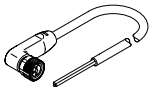	M8x1 A-coded to EN 61076-2-104	Open end	3	2.5 m	**8078230**	**NEBA-M8W3-U-2.5-N-LE3**
				5 m	**8078231**	**NEBA-M8W3-U-5-N-LE3**