Standards-based cylinders DSBG, ISO 15552

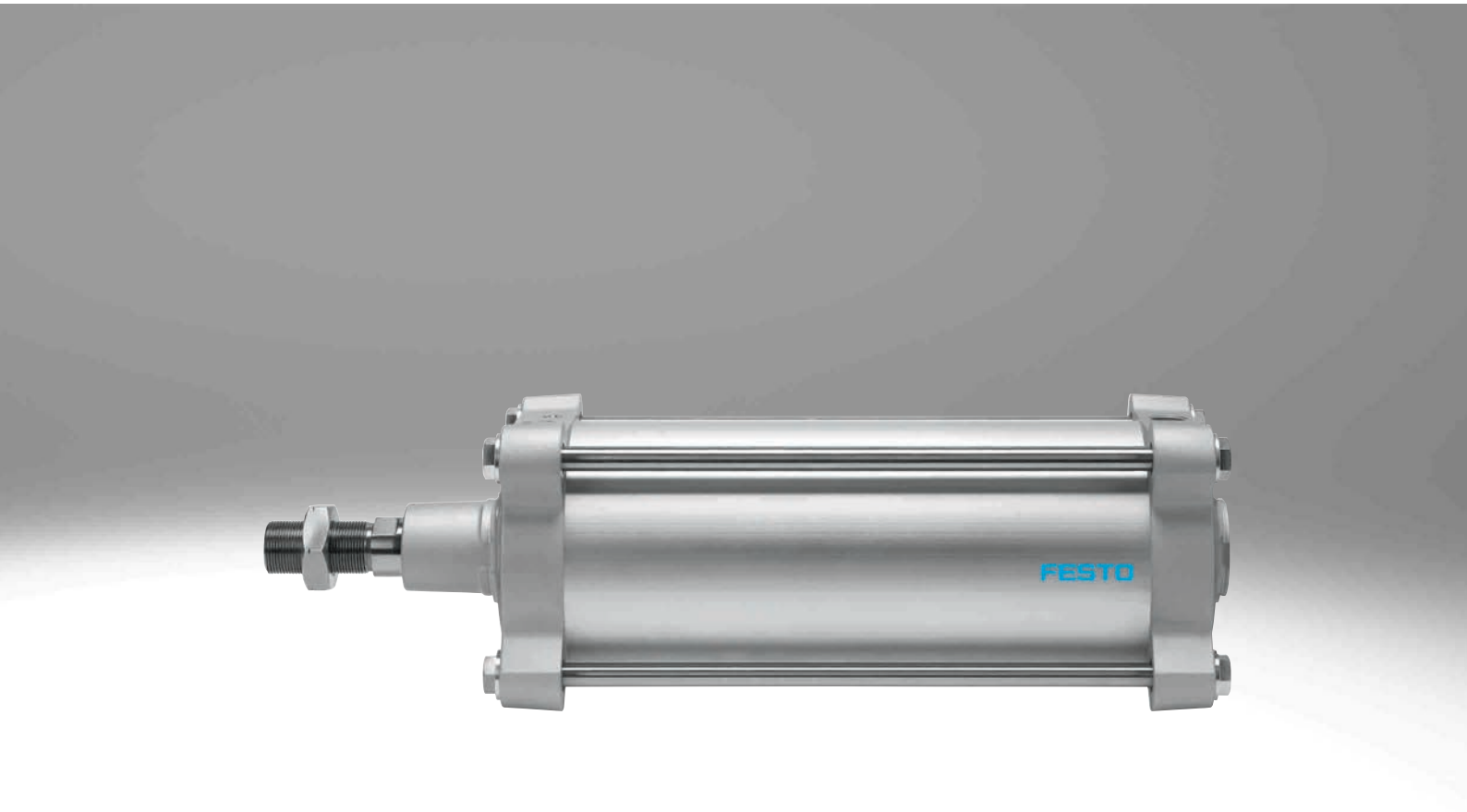

Key features

At a glance

- Standards-based cylinders to ISO 15552 (corresponds to the withdrawn standards ISO 6431, DIN ISO 6431, VDMA24562, NFE49003.1 and UNI 10290)
- Sturdy tie rod design
- Double-acting
- For contactless position sensing
- EX4: for use in potentially explosive areas
- An extensive range of accessories enables the cylinders to be installed virtually anywhere
- Choice of two cushioning types:
  - Elastic cushioning: elastic cushioning rings/pads at both ends
  - PPV cushioning: pneumatic cushioning, adjustable at both ends
- The variants can be configured according to individual needs using a modular product system
- Excellent flexibility thanks to the wide range of variants

Variants from the modular product system

Symbol	Key features		Description
	T	Through piston rod	For working at both ends with the same force in the forward and return stroke, for attaching external stops
	F	Female piston rod thread	–
	R3	High corrosion protection	All external cylinder surfaces comply with corrosion resistance class 3 to Festo standard 940 070. The piston rod is made from corrosion and acid-resistant steel
	T1	Heat-resistant seals	Temperature range 0 ... +120°C
	T4	Heat-resistant seals	Temperature range 0 ... +150°C
	...E	Extended piston rod	1 ... 500 mm
	...L	Extended piston rod thread	1 ... 100 mm
	...S	Shortened piston rod thread	1 ... 86 mm
	M...	Piston rod thread	Piston rod thread version: M16/M16x1.5/M20/M20x1.5/M24/M27/M27x2/M30x2/M36/M36x2/M42/M42x2/M48
	A6	Scraper variant	Metal scraper: The cylinder is fitted with a hard-chrome plated piston rod and a metal scraper, which scrapes off hard particles (e.g. welding spatter) sticking to the piston rod. For use in welding systems, for example
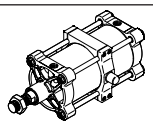	V	Central swivel mounting	• For piston diameter 160, 200 • Swivel mounting, clamped centrally between the cylinder end caps • Position can be moved at any time
	...Y	Trunnion flange mounting position	• For piston diameter 250, 320 • Swivel mounting, position freely selectable, positive-locking screw connection • Position cannot be changed at a later date
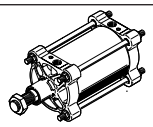	B	Integrated spacer bolts	• B1: at both ends • B2: on the bearing cap • B3: on the end cap
	Thread length of spacer bolts: ...LB2 on the bearing cap ...LB3 on the end cap		• Variable thread length: 32 ... 140 mm • Optionally on the bearing or end cap

Peripherals overview

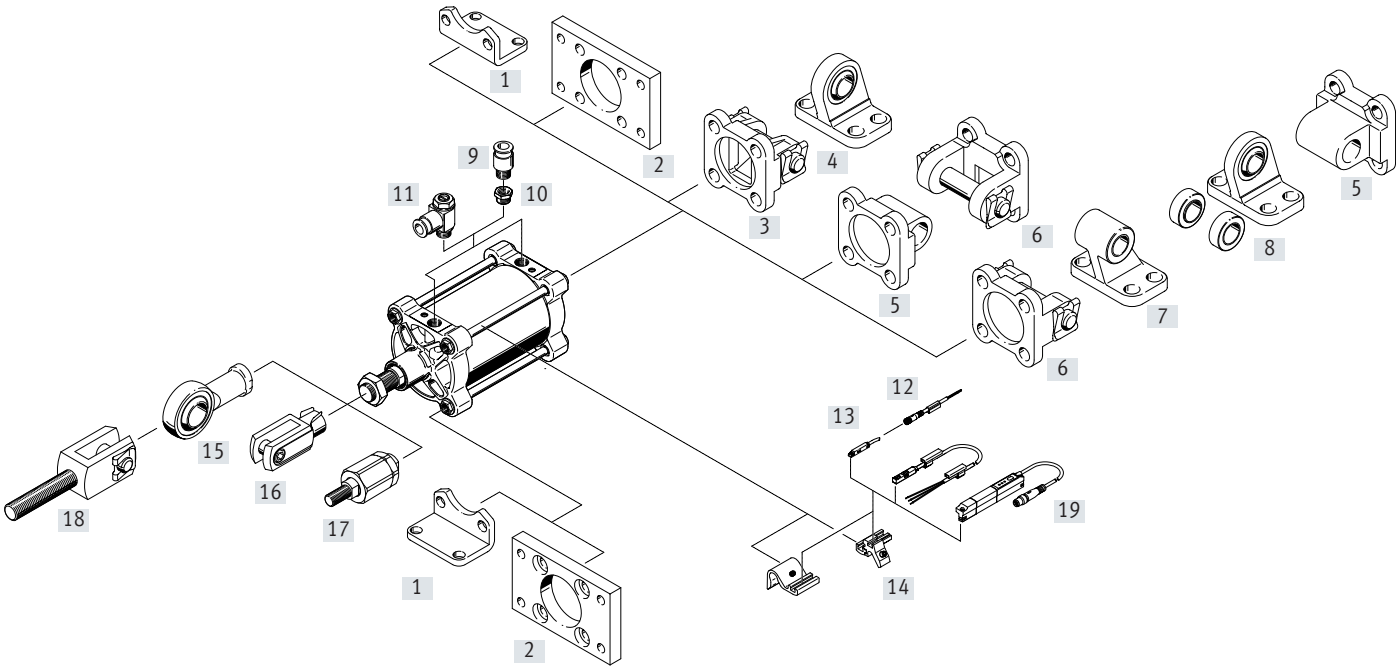

Mounting components and accessories		For diameter	Description	→ Page/ Internet
[1]	Foot mounting HNG	160 ... 320	For bearing and end caps, corresponds to MS1 to ISO 15552	17
[2]	Flange mounting FNG	160 ... 320	For bearing or end caps, corresponds to MF1/MF2 to ISO 15552	17
[3]	Swivel flange SNG	160, 200	For end caps	18
[4]	Clevis foot LSNG	160, 200	With spherical bearing	20
[5]	Swivel flange SNGL	160, 200	For end cap, corresponds to MP2 to ISO 15552	19
[6]	Swivel flange SNGB	160 ... 320	For end cap, corresponds to MP2 to ISO 15552	18
[7]	Clevis foot LN/LNG	160 ... 320	For swivel flange SNGB	18
[8]	Clevis foot LSN	160 ... 320	With spherical bearing	20
[9]	Push-in fitting QS	160, 200	For connecting tubing with standard outside diameters	20
[10]	Reducing nipple NPFC	160, 200	For connecting QS fittings with thread G1/2 to cylinders with thread G3/4	20
	Reducing nipple D	250, 320	For connecting QS fittings with thread G1/2 to cylinders with thread G1	
[11]	One-way flow control valve GRLA	160, 200	For speed regulation	grla
[12]	Connecting cable NEBU	160 ... 320	–	21
[13]	Proximity switch SME/SMT-8	160 ... 320	For sensing the piston position	21
[14]	Sensor bracket DASP	160 ... 320	For proximity switch SME/SMT-8	22
[15]	Rod eye SGS	160 ... 320	With spherical bearing	20
[16]	Rod clevis SG	160 ... 320	Permits a swivelling movement of the cylinder in one plane	20
[17]	Self-aligning rod coupler FK	160, 200	For compensating radial and angular deviations	20
[18]	Rod clevis SGA	160, 200	Suitable for spherical mounting of cylinders in conjunction with rod eye SGS	20
[19]	Position transmitter SDAT	160, 200	• Continuously senses the position of the piston • Has an analogue output	22
–	Trunnion support LNZG	160 ... 320	For mounting the cylinder in combination with central swivel mounting or trunnion flange mounting position	19

Type codes

001	Series	
DSBG	Standards-based cylinder, double-acting, based on ISO 15552	

002	Central swivel mounting	
	None	
V	Central, clamped	

003	Piston diameter	
160	160	
200	200	
250	250	
320	320	

004	Stroke	
...	25 ... 500	

005	Piston rod type	
	At one end	
T	Through piston rod	

006	Piston rod thread type	
	Male thread	
F	Female thread	

007	Cushioning	
P	Elastic cushioning rings/plates on both sides	
PPV	Pneumatic cushioning, adjustable at both ends	

008	Position sensing	
	None	
A	For proximity sensor	

009	Standard	
	Not according to standard	
N3	Conforms to ISO 15552	

010	Corrosion protection	
	Standard	
R3	High corrosion protection	

011	Temperature range	
	Standard	
T1	Heat-resistant seals max. 120°C	
T4	0 ... +150°C	

012	Scraper variant	
	None	
A6	Metal scraper	

013	EU certification	
	None	
EX4	II 2GD	

014	Trunnion flange mounting position, positive locking	
	None	
...Y	With	

015	Piston rod extension	
	None	
...E	1 ... 500 mm	

016	Piston rod thread extension	
...L	1 ... 70 mm	

017	Piston rod thread shortening	
	None	
...S	0 ... 86 mm	

018	Piston rod thread	
	Standard	
M16	M16	
M16P	M16x1.5	
M20	M20	
M20P	M20x1.5	
M24	M24	
M27	M27	
M36P	M36x2	
M42P	M42x2	
M48	M48	
M42	M42	
M27P	M27x2	
M30P	M30x2	
M36	M36	

019	Integrated spacer bolts	
	None	
B1	Both sides	
B2	In the bearing cover	
B3	In the end cap	

020	Thread length of spacer bolts on bearing cap	
	Without spacer bolt	
...LB2	20 ... 140 mm	

021	Thread length of spacer bolts on end cap	
	Without spacer bolt	
...LB3	20 ... 140 mm	

Data sheet

Function
Elastic cushioning

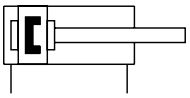

PPV cushioning

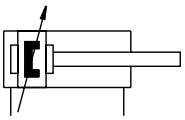

Diameter
160 ... 320 mm

Stroke length
1 ... 2700 mm

www.festo.com

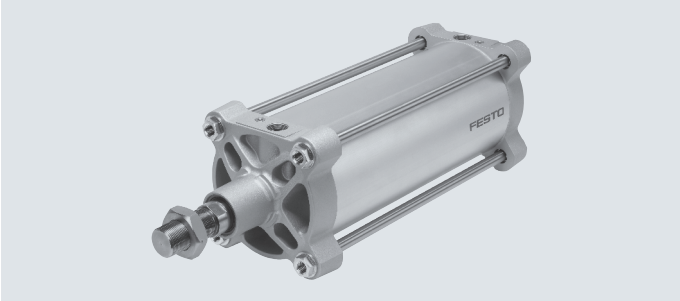

General technical data					
Piston diameter		160	200	250	320
Design		Piston/piston rod/cylinder barrel			
Mode of operation		Double-acting			
Pneumatic connection		G3/4	G3/4	G1	G1
Stroke[1]					
DSBG-...	[mm]	1 ... 2700		1 ... 2250	
DSBG-...-...E	[mm]	1 ... 2000			
DSBG-...-...L	[mm]	1 ... 2000			
Cushioning					
DSBG-...-P		Elastic cushioning rings/pads at both ends			
DSBG-...-PPV		Pneumatic cushioning, adjustable at both ends			
Cushioning length	[mm]	48		55	65
Position sensing		Via proximity switch			
Type of mounting		With female thread/accessories			
Mounting position		Any			

1) In combination with the position sensing option, the minimum stroke is 10 mm

Operating and environmental conditions					
Piston diameter		160	200	250	320
Operating medium		Compressed air to ISO 8573-1:2010 [7:4:4]			
Note on operating/pilot medium		Lubricated operation possible (in which case lubricated operation will always be required)			
Operating pressure	[bar]	0.6 ... 10			
Ambient temperature[1]					
DSBG-...	[°C]	−20 ... +80			
DSBG-...-T1	[°C]	0 ... +120			
DSBG-...-T4	[°C]	0 ... +150		–	
DSBG-...-EX4	[°C]	−20 ... +60			
Corrosion resistance CRC					
DSBG-...		2[2]			
DSBG-...-R3		3[3]			

1) Note operating range of proximity switches
2) Corrosion resistance class CRC 2 to Festo standard FN 940070
Moderate corrosion stress. Indoor applications in which condensation can occur. External visible parts with primarily decorative surface requirements which are in direct contact with a normal industrial environment.
3) Corrosion resistance class CRC 3 to Festo standard FN 940070
High corrosion stress. Outdoor exposure under moderate corrosive conditions. External visible parts with primarily functional surface requirements which are in direct contact with a normal industrial environment.

Data sheet

ATEX[1]	
ATEX category for gas	II 2G
Type of ignition protection for gas	Ex h IIC T4 Gb
ATEX category for dust	II 2D
Type of ignition protection for dust	Ex h IIIC T120°C Db
Explosion-proof ambient temperature	−20°C ≤ Ta ≤ +60°C
CE marking (see declaration of conformity)	To EU Explosion Protection Directive (ATEX)
UKCA marking (see declaration of conformity)	To UK EX instructions
Explosion protection certification outside the EU	EPL Gb (GB)
	EPL Db (GB)

1) Note the ATEX certification of the accessories.

Forces [N] and impact energy [J]				
Piston diameter	160	200	250	320
Theoretical force at 6 bar, advancing	12064	18850	29452	48255
Theoretical force at 6 bar, retracting	11310	18096	28274	46385
Max. impact energy in the end positions				
DSBG-...	3.3	4.8	7.2	12.6
DSBG-...-T1/-T4	2.3	4	4.2	6

Permissible impact velocity: $v = \sqrt{\frac{2 \cdot E}{m_1 + m_2}}$

Maximum permissible mass: $m_2 = \frac{2 \cdot E}{v^2} - m_1$

V	perm. impact velocity
E	max. impact energy
m1	Moving mass (drive)
m2	Moving payload

Weights [g]				
Piston diameter	160	200	250	320
DSBG-...				
Product weight with 0 mm stroke	11751	15493	29313	50231
Additional weight per 10 mm stroke	208	246	384	623
Moving mass with 0 mm stroke	4292	5348	9978	16912
Moving mass per 10 mm stroke	97	97	157	249
DSBG-...-T				
Product weight with 0 mm stroke	13487	17356	31979	54775
Additional weight per 10 mm stroke	304	343	541	872
Moving mass with 0 mm stroke	6028	7210	12643	21455
Moving mass per 10 mm stroke	194	194	314	499

Data sheet

Max. transverse force Fq as a function of stroke length l

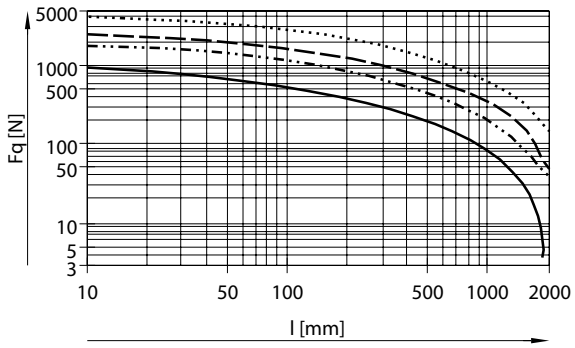

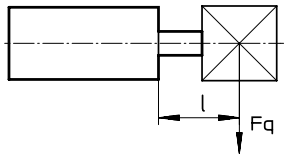

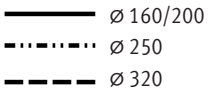

Data sheet

Materials

Sectional view

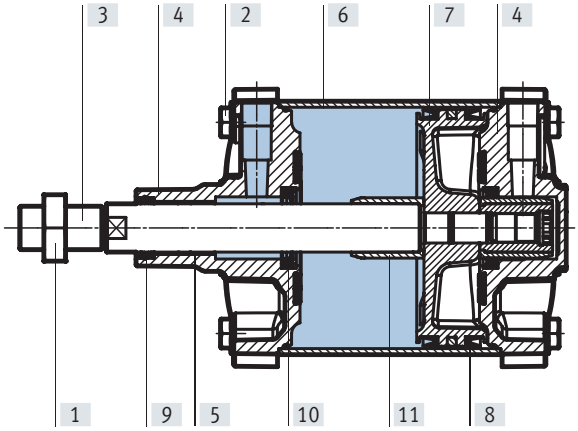

Normzylinder		
[1]	Nut	
	DSBG-...	Galvanised steel
	DSBG-...-R3	High-alloy stainless steel
[2]	Collar nut	Galvanised steel
[3]	Piston rod	
	DSBG-...	Steel, high-alloy
	DSBG-...-R3	High-alloy stainless steel
	DSBG-...-A6	Hard-chrome-plated tempered steel
[4]	Cover	Coated die-cast aluminium
[5]	Bearing	
	DSBG-...	Metal polymer compound
	DSBG-...-EX4	Bronze
[6]	Cylinder barrel	Anodised wrought aluminium alloy
[7]	Piston	Coated die-cast aluminium
[8]	Piston seal	
	DSBG-...	NBR
	DSBG-...-T1/-T4	FPM
[9]	Piston rod wiper seal	
	DSBG-...	NBR
	DSBG-...-T1/-T4	FPM
[10]	Buffer seal	
	DSBG-...	POM
	DSBG-...-T1/-T4	Wrought aluminium alloy
[11]	Cushion piston	
	DSBG-...	POM
	DSBG-...-T1/-T4	Wrought aluminium alloy
–	Tie rods	
	DSBG-...	Steel, high-alloy
	DSBG-...-R3	High-alloy stainless steel
	Rod wiper seal	
	DSBG-...-A6	CuZn
	Spacer bolt	
	DSBG-...-B1/-B2/-B3/-LB2/-LB3	High-alloy steel
	DSBG-...-R3-B1/-R3-B2/-R3-B3/-R3-LB2/-R3-LB3	High-alloy stainless steel
	Swivel mounting	
	DSBG-160/200-...-V/-...V	Painted spheroidal graphite cast iron
	DSBG-250/320-...-Y/-...Y	Galvanised steel
	Collar nut	Galvanised steel
	Note on materials	
	DSBG-...	RoHS-compliant
	DSBG-...-T4	Contains paint-wetting impairment substances

Data sheet

Dimensions Download CAD data ➔ www.festo.com

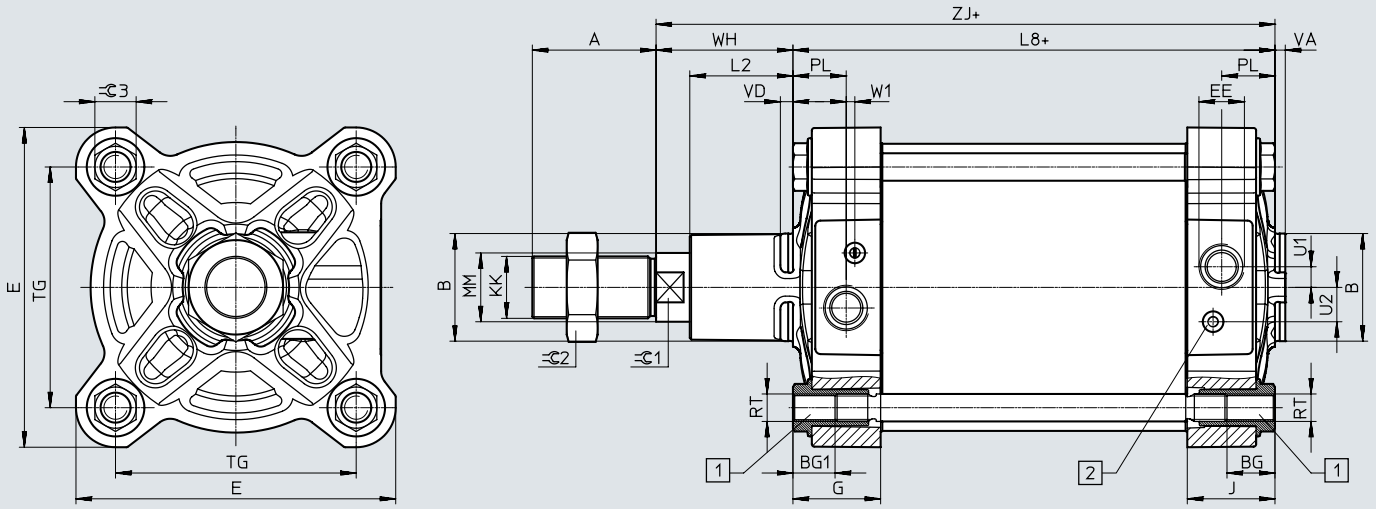

\+ = plus stroke length

[1] Special outer hex nut with female thread for mounting components

[2] Adjusting screw for adjustable end-position cushioning (PPV)

ø [mm]	A −0.5	B ø d11	BG min.	BG1 ±0.5	E ±0.9	EE	G	J
160	72	65	24	25	186	G3/4	50.7	50.7
200	72	75	24	25	230	G3/4	46.9	46.7
250	84	90	25	26	284	G1	51.2	51.2
320	96	110	28	29	347	G1	58.2	58.2

ø [mm]	L2	L8	MM	PL	RT	TG ±1.1	U1	U2
160	60	180±1	40	31	M16	140	12	20
200	70	180±1.2	40	30	M16	175	12	20
250	80	200±1.6	50	32	M20	220	25	25
320	90	220±2.2	63	37.5	M24	270	25	25

ø [mm]	VA −1	VD	W1	WH	ZJ ±1	⌀1	⌀2	⌀3
160	6	7	5	80±1.3	260	36	55	24_{h13}
200	6	6.5	5	95±1.4	275	36	55	24_{h13}
250	10	13.7	3	105±1.5	305	46	65	41_{h14}
320	10	10.7	1.5	120±1.5	340	55	75	50_{h14}

ø	KK	
	DSBG-...	
[mm]		-M... [1]
160	M36x2	M16/M16x1.5/M20/M20x1.5/M24/M27/M27x2/M30x2/M36
200	M36x2	M20/M20x1.5/M24/M27/M27x2/M30x2/M36
250	M42x2	M24/M27/M27x2/M30x2/M36x2/M42
320	M48x2	M27/M27x2/M30x2/M36x2/M42x2/M48

1) Threads with smaller nominal diameter than in the basic version can generally not withstand such high loads. If necessary, the screw connection must be engineered.

Data sheet

Dimensions – Variants Download CAD data ➔ www.festo.com

T – Through piston rod

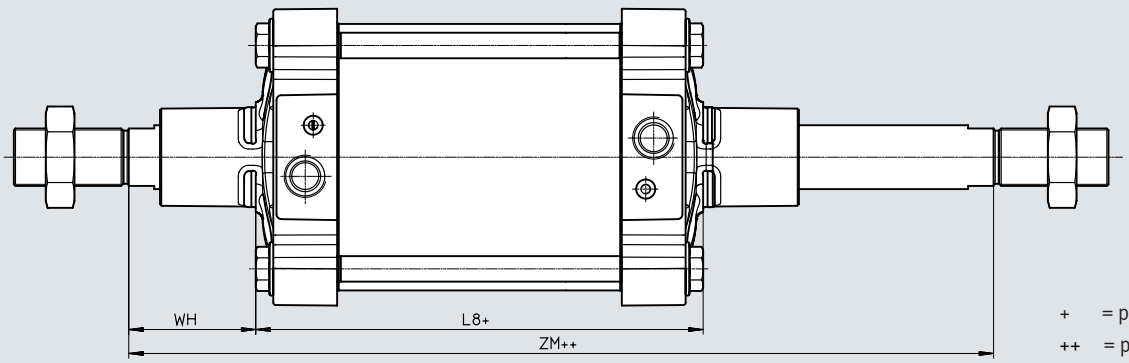

\+ = plus stroke length
++ = plus 2x stroke length

⌀ [mm]	L8	WH	ZM
160	180±1.1	80±1.3	342±1
200	180±1	95±1.4	372±1.2
250	200±1	105±1.5	410±1.6
320	220±2.2	120±1.5	462±1

Data sheet

F – Female thread

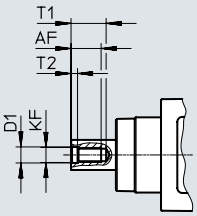

Note

Female thread at both ends in combination with the variant T.

...E – Extended piston rod

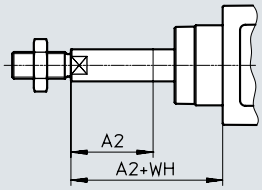

Note

Piston rod thread is extended at one end in combination with the variant T.

...L – Extended piston rod thread

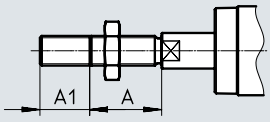

Note

Piston rod thread is extended at both ends in combination with variant T.

...S – Shortened piston rod thread

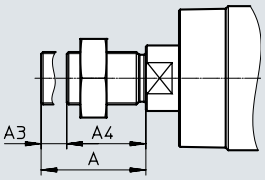

Note

Piston rod is shortened at both ends in combination with variant T.

Effective thread length: A4 = A – A3

⌀	A	A1		A2		A3	
[mm]		min.	max.	min.	max.	min.	max.
160	72	1	70	1	500	1	62
200	72	1	70	1	500	1	62
250	84	1	100	1	500	1	74
320	96	1	100	1	500	1	86

⌀	AF	D1	KF	T1	T2	WH
[mm]		H9				
160	36	25	M24	40	10	80±1.3
200	36	25	M24	40	10	95±1.4
250	50	31	M30	60	10	105±1.5
320	55	37	M36	65	13	120±1.5

Data sheet

Dimensions – Variants Download CAD data ➔ www.festo.com

V – Central swivel mounting

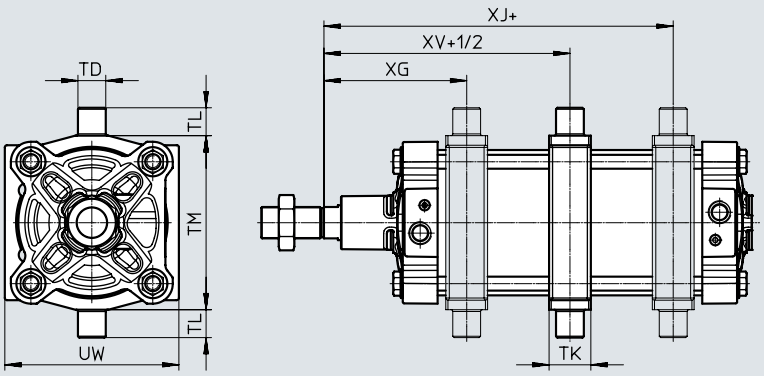

Note

The swivel mounting is mounted centrally on delivery but can be moved at any time.

+ = plus stroke length
+1/2 = plus half stroke length

ø [mm]	TD ø e8	TK	TL h14	TM h14	UW	XG ±0.5	XJ ±0.5	XV
160	32	48	32	200	200	157.5	182.5	170
200	32	48	32	250	240	169	200.5	185

...Y – Trunnion flange mounting position

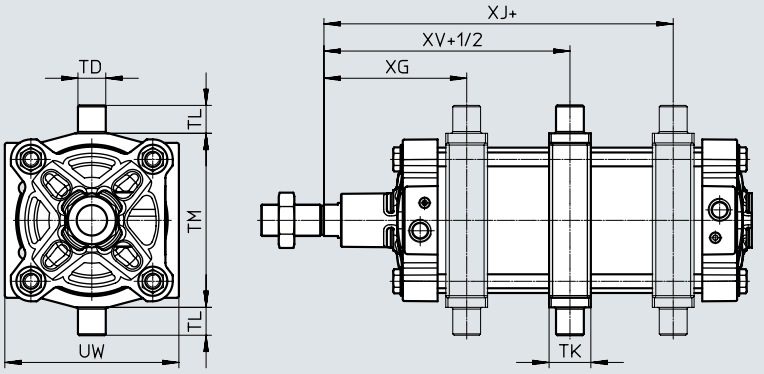

Note

The dimensions for the trunnion flange mounting position (...Y) refer to the basic design without extended piston rod thread.
The swivel mounting has a positive-locking screw connection.
This means that the position cannot be changed at a later date.

+ = plus stroke length
+1/2 = plus half stroke length

ø [mm]	TD ø e8	TK	TL h14	TM h14	UW	XG ±2.4	XJ ±2.4	XV ±2.4
250	40	60	40	320	319	198	209	205
320	50	70	50	400	385	226	233	230

Data sheet

Dimensions – Variants Download CAD data ➔ www.festo.com

B1/B2/B3 – Integrated spacer bolt

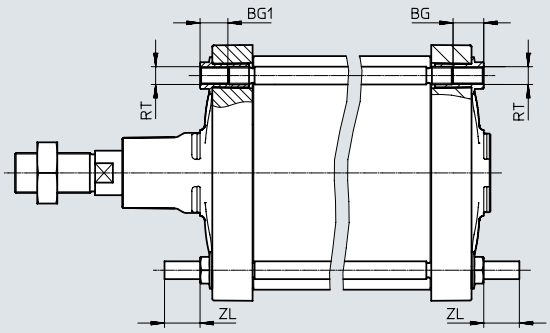

Ø [mm]	BG min.	BG1 ±0.5	RT	ZL ±0.5	ZL1[1)]
160	24	25	M16	32	32
200	24	25	M16	32	32
250	25	26	M20	40	40
320	28	29	M24	50	50

1) Tolerances depending on variant:
B1: ZL1 = +1/−2; B3: ZL1 = ±0.5

...LB2/-LB3 – Thread length of spacer bolts

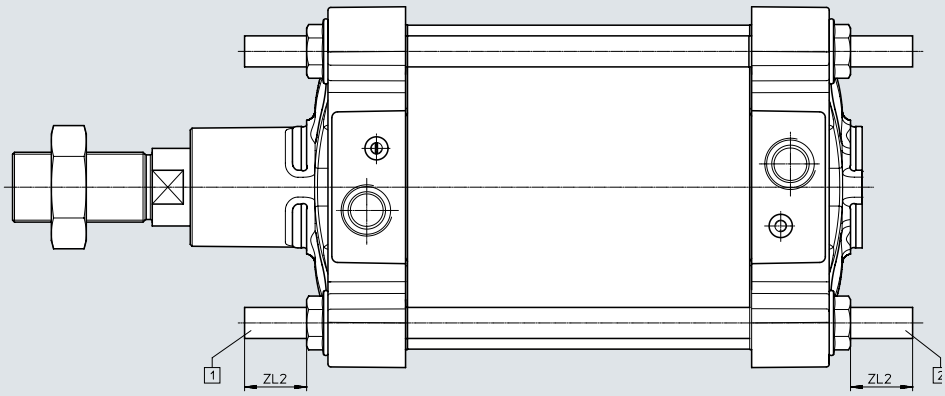

[1] = DSBG-...-LB2 (on the bearing cap)
[2] = DSBG-...-LB3 (on the end cap)

Ø [mm]	ZL2 ±1 min.	 max.
160	32	140
200	32	140
250	40	140
320	50	140

Data sheet

Ordering data					
Piston diameter [mm]	Stroke [mm]	With PPV cushioning With position sensing Part no.	Type	With elastic cushioning Without position sensing Part no.	Type
160	25	**2029462**	**DSBG-160-25-PPVA-N3**	**2536747**	**DSBG-160-25-P-N3**
	40	**2029463**	**DSBG-160-40-PPVA-N3**	**2536748**	**DSBG-160-40-P-N3**
	50	**2029464**	**DSBG-160-50-PPVA-N3**	**2536749**	**DSBG-160-50-P-N3**
	80	**2029465**	**DSBG-160-80-PPVA-N3**	**2536750**	**DSBG-160-80-P-N3**
	100	**2029466**	**DSBG-160-100-PPVA-N3**	**2536751**	**DSBG-160-100-P-N3**
	125	**2029467**	**DSBG-160-125-PPVA-N3**	**2536752**	**DSBG-160-125-P-N3**
	160	**2029468**	**DSBG-160-160-PPVA-N3**	**2536753**	**DSBG-160-160-P-N3**
	200	**2029469**	**DSBG-160-200-PPVA-N3**	**2536754**	**DSBG-160-200-P-N3**
	250	**2029470**	**DSBG-160-250-PPVA-N3**	**2536755**	**DSBG-160-250-P-N3**
	320	**2029471**	**DSBG-160-320-PPVA-N3**	**2536756**	**DSBG-160-320-P-N3**
	400	**2029472**	**DSBG-160-400-PPVA-N3**	**2536758**	**DSBG-160-400-P-N3**
	500	**2029473**	**DSBG-160-500-PPVA-N3**	**2536759**	**DSBG-160-500-P-N3**
	1 ... 2700[1)]	**2035926**	**DSBG-160-...-PPVA-N3**	**2537196**	**DSBG-160-...-P-N3**
200	25	**2390139**	**DSBG-200-25-PPVA-N3**	**2537448**	**DSBG-200-25-P-N3**
	40	**2390140**	**DSBG-200-40-PPVA-N3**	**2537449**	**DSBG-200-40-P-N3**
	50	**2390141**	**DSBG-200-50-PPVA-N3**	**2537450**	**DSBG-200-50-P-N3**
	80	**2390142**	**DSBG-200-80-PPVA-N3**	**2537451**	**DSBG-200-80-P-N3**
	100	**2390143**	**DSBG-200-100-PPVA-N3**	**2537452**	**DSBG-200-100-P-N3**
	125	**2390144**	**DSBG-200-125-PPVA-N3**	**2537454**	**DSBG-200-125-P-N3**
	160	**2390145**	**DSBG-200-160-PPVA-N3**	**2537455**	**DSBG-200-160-P-N3**
	200	**2390146**	**DSBG-200-200-PPVA-N3**	**2537456**	**DSBG-200-200-P-N3**
	250	**2390147**	**DSBG-200-250-PPVA-N3**	**2537457**	**DSBG-200-250-P-N3**
	320	**2390148**	**DSBG-200-320-PPVA-N3**	**2537458**	**DSBG-200-320-P-N3**
	400	**2390149**	**DSBG-200-400-PPVA-N3**	**2537459**	**DSBG-200-400-P-N3**
	500	**2390150**	**DSBG-200-500-PPVA-N3**	**2537460**	**DSBG-200-500-P-N3**
	1 ... 2700[1)]	**2389803**	**DSBG-200-...-PPVA-N3**	**2537445**	**DSBG-200-...-P-N3**
250	1 ... 2250[1)]	**2865078**	**DSBG-250-...-PPVA-N3**	**2865145**	**DSBG-250-...-P-N3**
320	1 ... 2250[1)]	**3150987**	**DSBG-320-...-PPVA-N3**	**3178601**	**DSBG-320-...-P-N3**

1) In combination with the position sensing option, the minimum stroke is 10 mm.

Note

Other variants in the modular product system ➔ page 15

Ordering data – Modular product system

Ordering table									
Size		160	200	250	320	Conditions	Code		Enter code
Module no.		**2036032**	**2344936**	**2732003**	**2776472**				
Function		Standards-based cylinder, double-acting, based on ISO 15552					**DSBG**		DSBG
Central swivel mounting		None							
		Centrally clamped		–			**-V**		
Piston diameter	[mm]	160	200	250	320		**-...**		
Stroke	[mm]	1 ... 2700		1 ... 2250		[1]	**-...**		
Piston rod type		At one end							
		Through piston rod					**-T**		
Piston rod thread type		Male thread							
		Female thread				[2]	**-F**		
Cushioning		Elastic cushioning rings/pads at both ends					**-P**		
		Pneumatic cushioning, adjustable at both ends					**-PPV**		
Position sensing		None							
		Via proximity switch					**A**		
Standard		Corresponds to ISO 15552					**-N3**		
Corrosion protection		Standard							
		High corrosion protection				[3]	**R3**		
Temperature range		Standard							
	[°C]	Heat-resistant seals up to max. 120					**T1**		
	[°C]	0 ... +150		–		[4]	**T4**		
Scraper variant		None							
		Metal scraper		–			**A6**		
EU certification		None							
		II 2GD				[45	**EX4**		
Trunnion flange mounting position	[mm]	None							
		–		198 ... 2459	226 ... 2483	[6]	**-...Y**		

[1] ... In combination with the position sensing option A, the minimum stroke is 10 mm
[2] F Not with N3, ...L, M...
[3] R3 Not with V, ...Y
[4] T4 Not with A6
[5] EX4 Not with V, P, T1, T4, B1, B2, B3, ...LB2, ...LB3
[6] ...Y Not with ...LB2, ...LB3

Ordering data – Modular product system

Ordering table

Size		160	200	250	320	Conditions	Code		Enter code
Extended piston rod	[mm]	None							
		1 ... 500				[7]	**-...E**		
Extended piston rod thread	[mm]	None							
		1 ... 70		1 ... 100		[7]	**-...L**		
Shortened piston rod thread	[mm]	None							
		1 ... 62		1 ... 74	1 ... 86		**-...S**		
Piston rod thread		Standard (→ 9)							
		M16	–			[9]	**-M16**		
		M16x1.5	–			[9]	**-M16P**		
		M20		–		[9]	**-M20**		
		M20x1.5		–		[9]	**-M20P**		
		M24			–	[9]	**-M24**		
		M27				[9]	**-M27**		
		M27x2				[9]	**-M27P**		
		M30x2				[9]	**-M30P**		
		M36		–		[9]	**-M36**		
		M36x2				[9]	**-M36P**		
		–		M42	–	[9]	**-M42**		
		–		M42x2		[9]	**-M42P**		
		–			M48	[9]	**-M48**		
Integrated spacer bolts		None							
		At both ends				[8] [9]	**-B1**		
		On the bearing cap				[8] [9]	**-B2**		
		On the end cap				[8] [9]	**-B3**		
Thread length of spacer bolts	[mm]	None							
		On the bearing cap				[9]	**-...LB2**		
		32 ... 140		40 ... 140	50 ... 140				
		On the end cap				[9]	**-...LB3**		
		32 ... 140		40 ... 140	50 ... 140				

[7] ...E, ...L — Only up to stroke 2000 mm.
Not with N3

[8] B1, B2, B3 — Not with ...LB2, ...LB3

[9] M..., B..., LB... — Not with N3

Note

If a thread smaller than the standard thread is selected for feature M... (piston rod thread), this may reduce the load capacity.

Note

When characteristic M... is selected, the piston rod nut is not included.

Accessories

Foot mounting HNG

Material:
Galvanised steel
Free of copper and PTFE

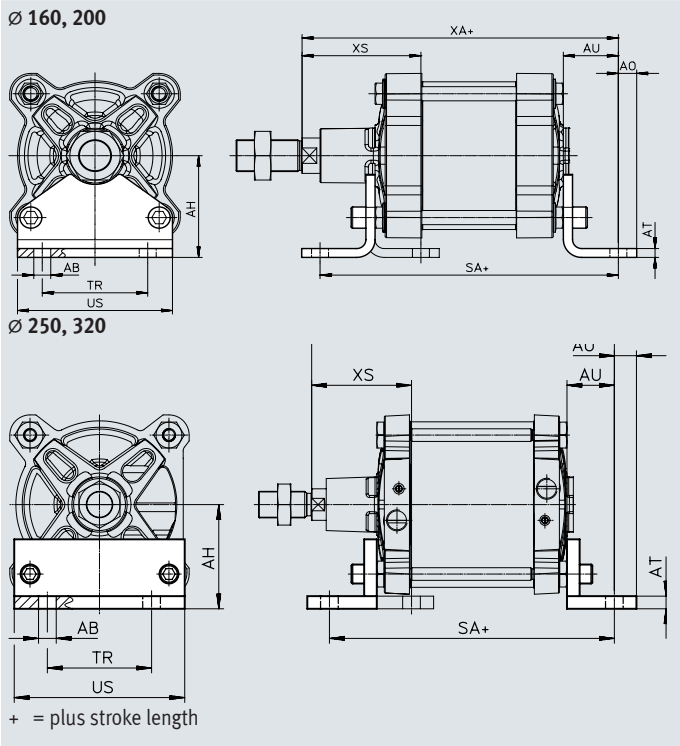

Dimensions and ordering data

For diameter [mm]	AB Ø	AH	AO	AT	AU	SA	TR	US	XA	XS	CRC[1]	Weight [g]	Part no.	Type
160	18.5	115	20	10	60	300	115	169	320	130	2	3931	**34476**	**HNG-160**
200	24	135	30	12	70	320	135	214	345	153	2	6896	**34477**	**HNG-200**
250	28	165	35	20	75	350	165	270	380	160	2	17084	**157510**	**HNG-250**
320	35	200	40	25	85	390	200	340	425	180	2	29968	**157511**	**HNG-320**

1) Corrosion resistance class CRC 2 to Festo standard FN 940070
Moderate corrosion stress. Indoor applications in which condensation can occur. External visible parts with primarily decorative surface requirements which are in direct contact with a normal industrial environment.

Flange mounting FNG

Material:
Painted spheroidal graphite cast iron
Free of copper and PTFE
RoHS-compliant

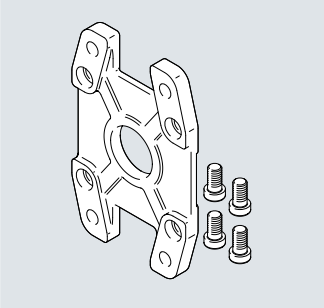

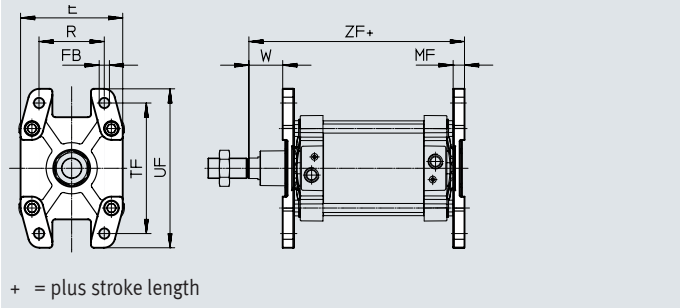

Dimensions and ordering data

For diameter [mm]	E	FB Ø H13	MF	R	TF	UF	W	ZF	CRC[1]	Weight [g]	Part no.	Type
160	**180**	**18**	**20**	**115**	**230**	**280**	**60**	**280**	1	3550	**34478**	**FNG-160**
200	**220**	**22**	**25**	**135**	**270**	**320**	**70**	**300**	1	5321	**34479**	**FNG-200**
250	**270**	**26**	**25**	**165**	**330**	**390**	**80**	**330**	1	8657	**157508**	**FNG-250**
320	**340**	**33**	**30**	**200**	**400**	**470**	**90**	**370**	1	15109	**157509**	**FNG-320**

1) Corrosion resistance class CRC 1 to Festo standard FN 940070
Low corrosion stress. Dry internal application or transport and storage protection. Also applies to parts behind covers, in the non-visible interior area, and parts which are covered in the application (e.g. drive trunnions).

Accessories

Swivel flange SNG

Material:
Die-cast aluminium
Free of copper and PTFE
RoHS-compliant

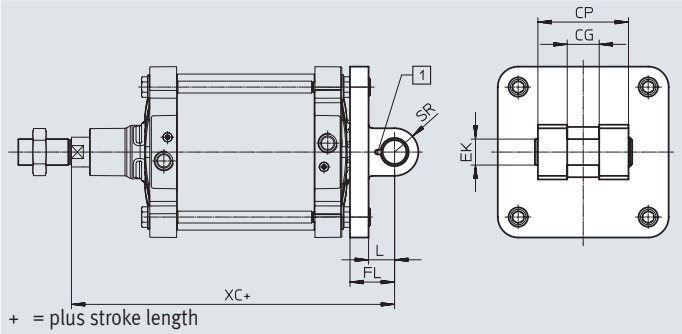

+ = plus stroke length

[1] The pivot pin is secured against rotation with a spring pin.

Dimensions and ordering data

For diameter [mm]	CG H14	CP d12	EK ⌀ F7 h9	FL ±0.2	L	SR max.	XC	CRC[1]	Weight [g]	Part no.	Type
160	43	122	35	55	35	32	315	2	3577	**152597**	**SNG-160**
200	43	122	35	60	35	32	335	2	5160	**152598**	**SNG-200**

1) Corrosion resistance class CRC 2 to Festo standard FN 940070
Moderate corrosion stress. Indoor applications in which condensation can occur. External visible parts with primarily decorative surface requirements which are in direct contact with a normal industrial environment.

Swivel flange SNGB

Material:
⌀160: Die-cast aluminium
⌀200: Galvanised steel
⌀250/320: Spheroidal graphite cast iron
Free of copper and PTFE
RoHS-compliant

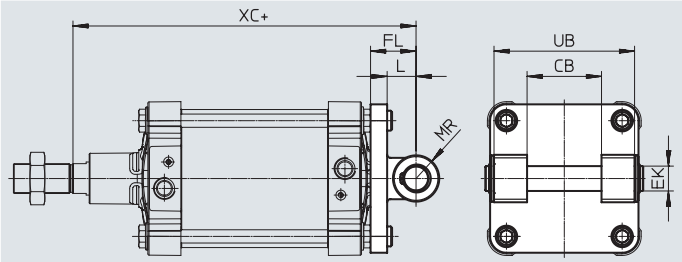

+ = plus stroke length

Dimensions and ordering data

For diameter [mm]	CB ⌀ H14	EK ⌀ E10	FL ±0.2	L	MR	UB h14	XC	CRC[1]	Weight [g]	Part no.	Type
160	90	30	55	37	30	170	315	2	3445	**34547**	**SNGB-160**
200	90	30	60	40	25	170	335	2	10020	**562455**	**SNGB-200-B**
250	110	40	70	47	40	200	375	1	16141	**157512**	**SNGB-250**
320	120	45	80	52	45	220	420	1	26636	**157513**	**SNGB-320**

1) Corrosion resistance class CRC 1 to Festo standard FN 940070
Low corrosion stress. Dry internal application or transport and storage protection. Also applies to parts behind covers, in the non-visible interior area, and parts which are covered in the application (e.g. drive trunnions).
Corrosion resistance class CRC 2 to Festo standard FN 940070
Moderate corrosion stress. Indoor applications in which condensation can occur. External visible parts with primarily decorative surface requirements which are in direct contact with a normal industrial environment.

Accessories

Swivel flange SNGL

Material:
Die-cast aluminium
Free of copper and PTFE

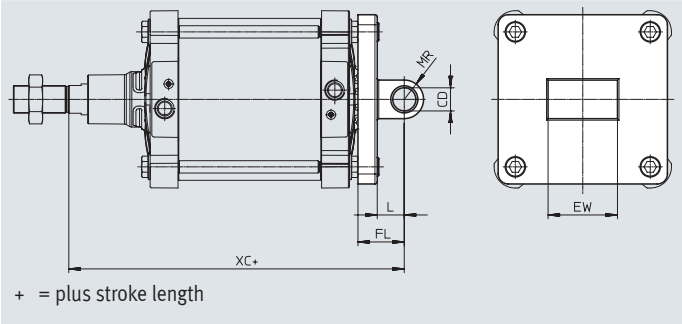

Dimensions and ordering data

For diameter [mm]	CD ø H9	EW −0.5/−1.2	FL ±0.2	L	MR	XC	CRC[1]	Weight [g]	Part no.	Type
160	30	90	55	35	25	315	2	2358	**151534**	**SNGL-160**
200	30	90	60	35	25	335	2	3713	**151535**	**SNGL-200**

1) Corrosion resistance class CRC 2 to Festo standard FN 940070
Moderate corrosion stress. Indoor applications in which condensation can occur. External visible parts with primarily decorative surface requirements which are in direct contact with a normal industrial environment.

Trunnion support LNZG

Material:
Mounting: Galvanised steel
Plain bearing: Plastic
Free of copper and PTFE
RoHS-compliant

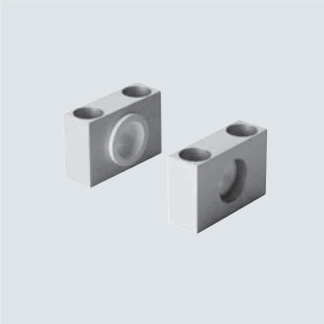

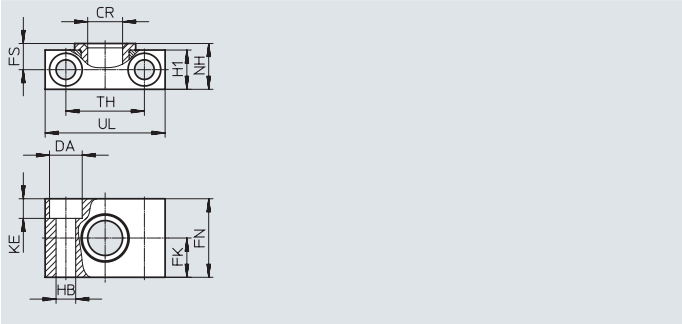

Dimensions and ordering data

For diameter [mm]	CR ø	DA ø H13	FK ø ±0.2	FN	FS	H1	HB ø H13	KE
160, 200	32^{D11}	26	30	60	22.5	36	18	17
250	40^{G7}	33	35	70	27.5	45	22	21.5
320	50^{G7}	40	40	80	32.5	55	26	25.5

For diameter [mm]	NH	TH ±0.3	UL	CRC[1]	Weight [g]	Part no.	Type
160, 200	40	60	92	2	659	**35780**	**LNZG-16 0/200**
250	50	90	140	2	2218	**157516**	**LNZG-250**
320	60	100	150	2	2934	**157517**	**LNZG-320**

1) Corrosion resistance class CRC 2 to Festo standard FN 940070
Moderate corrosion stress. Indoor applications in which condensation can occur. External visible parts with primarily decorative surface requirements which are in direct contact with a normal industrial environment.

Accessories

Ordering data – Mounting components

Data sheets ➔ Internet: mounting component

Designation	For diameter	Part no.	Type
Clevis foot LN/LNG			
	160	**9037**	**LN-160**
	200	**33898**	**LNG-200**
	250	**9039**	**LN-250**
	320	**9040**	**LN-320**
Clevis foot LSNG			
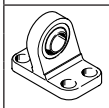	160	**152599**	**LSNG-160**
	200	**152600**	**LSNG-200**

Designation	For diameter	Part no.	Type
Clevis foot LSN			
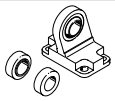	160	**6988**	**LSN-160**
	200	**6989**	**LSN-200**
	250	**6990**	**LSN-250**
	320	**6991**	**LSN-320**

Ordering data – Piston rod attachments

Data sheets ➔ Internet: piston rod attachment

Designation	For diameter	Part no.	Type
Rod eye SGS			
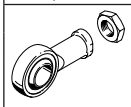	160, 200	**10775**	**SGS-M36x2**
	250	**10776**	**SGS-M42x2**
	320	**10777**	**SGS-M48x2**
Rod eye SG			
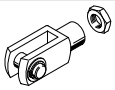	160, 200	**9581**	**SG-M36x2**
	250	**9582**	**SG-M42x2**
	320	**9583**	**SG-M48x2**

Designation	For diameter	Part no.	Type
Rod clevis SGA			
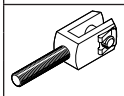	160, 200	**10771**	**SGA-M36x2**
Self-aligning rod coupler FK			
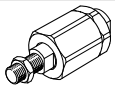	160, 200	**10746**	**FK-M36x2**

Ordering data – Push-in fittings

Data sheets ➔ Internet: qs

	For diameter	Connection		Part no.	Type	PE[1]
		Thread	Tubing O.D.			
G thread with external hexagon						
	160, 200	G3/4	22	**8040613**	**QS-G3/4-22**	1

1) Packaging unit

Ordering data – Reducing nipple

	For diameter	Description	Part no.	Type	PE[1]
	Reducing nipple NPFC				
	160, 200	For connecting QS fittings with thread G1/2 to cylinders with thread G3/4	**8030313**	**NPFC-R-G34-G12-MF**	1
	Reducing nipple D				
	250, 320	For connecting QS fittings with thread G1/2 to cylinders with thread G1	**197634**	**D-1/2I-1A**	1

1) Packaging unit

Accessories

Ordering data – Proximity switch for T-slot, magneto-resistive

Data sheets → Internet: smt

	Type of mounting	Switching output	Electrical connection	Cable length [m]	Part no.	Type
N/O contact						
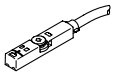	Inserted in the slot from above, flush with the cylinder profile, short design	PNP	Cable, 3-wire	2.5	**574335**	**SMT-8M-A-PS-24V-E-2.5-OE**
			Plug M8x1, 3-pin	0.3	**574334**	**SMT-8M-A-PS-24V-E-0.3-M8D**
			Plug M12x1, 3-pin	0.3	**574337**	**SMT-8M-A-PS-24V-E-0.3-M12**
		NPN	Cable, 3-wire	2.5	**574338**	**SMT-8M-A-NS-24V-E-2.5-OE**
			Plug M8x1, 3-pin	0.3	**574339**	**SMT-8M-A-NS-24V-E-0.3-M8D**
N/C contact						
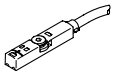	Inserted in the slot from above, flush with the cylinder profile, short design	PNP	Cable, 3-wire	7.5	**574340**	**SMT-8M-A-PO-24V-E-7.5-OE**

Ordering data – Proximity switches for T-slot, magnetic reed

Data sheets → Internet: sme

	Type of mounting	Switching output	Electrical connection	Cable length [m]	Part no.	Type
N/O contact						
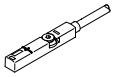	Inserted in the slot from above, flush with the cylinder profile	Contacting	Cable, 3-wire	2.5	**543862**	**SME-8M-DS-24V-K-2.5-OE**
				5.0	**543863**	**SME-8M-DS-24V-K-5.0-OE**
			Cable, 2-wire	2.5	**543872**	**SME-8M-ZS-24V-K-2.5-OE**
			Plug M8x1, 3-pin	0.3	**543861**	**SME-8M-DS-24V-K-0.3-M8D**
N/C contact						
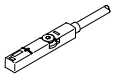	Inserted in the slot from above, flush with the cylinder profile	Contacting	Cable, 3-wire	7.5	**546799**	**SME-8M-DO-24V-K-7.5-OE**

Ordering data – Connecting cables

Data sheets → Internet: nebu

	Electrical connection, left	Electrical connection, right	Cable length [m]	Part no.	Type
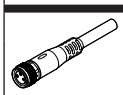	Straight socket, M8x1, 3-pin	Cable, open end, 3-wire	2.5	**541333**	**NEBU-M8G3-K-2.5-LE3**
			5	**541334**	**NEBU-M8G3-K-5-LE3**
	Straight socket, M12x1, 5-pin	Cable, open end, 3-wire	2.5	**541363**	**NEBU-M12G5-K-2.5-LE3**
			5	**541364**	**NEBU-M12G5-K-5-LE3**
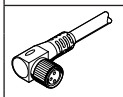	Angled socket, M8x1, 3-pin	Cable, open end, 3-wire	2.5	**541338**	**NEBU-M8W3-K-2.5-LE3**
			5	**541341**	**NEBU-M8W3-K-5-LE3**
	Angled socket, M12x1, 5-pin,	Cable, open end, 3-wire	2.5	**541367**	**NEBU-M12W5-K-2.5-LE3**
			5	**541370**	**NEBU-M12W5-K-5-LE3**

Accessories

Position transmitter

The position transmitter continuously senses the position of the piston.

It has an analogue output with an output signal in proportion to the piston position.

Ordering data – Position transmitter for T-slot

Data sheets → Internet: position transmitter

	For diameter	Position measuring range	Analogue output [mA]	Type of mounting	Electrical connection	Cable length [m]	Part no.	Type
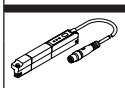	160, 200	0 … 50	4 … 20	Inserted in the slot from above	Plug M8x1, 4-pin, in-line	0.3	**1531265**	**SDAT-MHS-M50-1L-SA-E-0.3-M8**
		0 … 80					**1531266**	**SDAT-MHS-M80-1L-SA-E-0.3-M8**
		0 … 100					**1531267**	**SDAT-MHS-M100-1L-SA-E-0.3-M8**
		0 … 125					**1531268**	**SDAT-MHS-M125-1L-SA-E-0.3-M8**
		0 … 160					**1531269**	**SDAT-MHS-M160-1L-SA-E-0.3-M8**

Ordering data – Connecting cables

Data sheets → Internet: nebu

	Electrical connection, left	Electrical connection, right	Cable length [m]	Part no.	Type
	Straight socket, M8x1, 4-pin	Cable, open end, 4-wire	2.5	**541342**	**NEBU-M8G4-K-2.5-LE4**
			5	**541343**	**NEBU-M8G4-K-5-LE4**
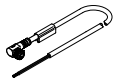	Angled socket, M8x1, 4-pin	Cable, open end, 4-wire	2.5	**541344**	**NEBU-M8W4-K-2.5-LE4**
			5	**541345**	**NEBU-M8W4-K-5-LE4**

Ordering data – Sensor bracket for proximity switches

	For diameter	Materials	Part no.	Type
	160, 200	Rail: anodised wrought aluminium alloy Screws: high-alloy stainless steel	**1553813**	**DASP-M4-160-A**
	250		**1456781**	**DASP-M4-250-A**
	320		**3015256**	**DASP-M4-320-A**

Festo - Your Partner in Automation

1 Festo Inc.

5300 Explorer Drive
Mississauga, ON L4W 5G4
Canada

Festo Customer Interaction Center
Tel: 1 877 463 3786
Fax: 1 877 393 3786
Email: customer.service.ca@festo.com

2 Festo Pneumatic

Av. Ceylán 3,
Col. Tequesquináhuac
54020 Tlalnepantla,
Estado de México

Multinational Contact Center
01 800 337 8669

ventas.mexico@festo.com

3 Festo Corporation

1377 Motor Parkway
Suite 310
Islandia, NY 11749

4 Regional Service Center

7777 Columbia Road
Mason, OH 45040

Festo Customer Interaction Center
1 800 993 3786
1 800 963 3786
customer.service.us@festo.com

Connect with us

www.festo.com/socialmedia

www.festo.com

Subject to change