Proportional flow control valve VEMD

Key features

Description

Thanks to the integrated low-noise piezo technology, minimal energy consumption and compact dimensions, the valve VEMD is perfectly suited to mobile applications.

Advantages:
- Very low energy consumption
- High dynamic response
- No self-heating
- Absolutely silent
- Excellent price/performance ratio
- Sturdy and durable
- Linear control response
- Small installation space
- Minimal weight

Mode of operation

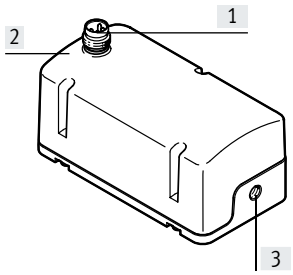

[1] Electrical connection
[2] Connection 1 (pressure supply connection)
[3] Connection 2 (working connection)

The VEMD is a mass flow controller with integrated piezo actuator. The flow rate is controlled via a closed-loop control circuit with integrated thermal sensor.

An analogue interface allows the setpoint value for the flow rate to be specified and the actual value to be fed back.

Range of application

The proportional flow control valve VEMD is intended to be used for controlling the flow of air and inert gases in relation to a specified setpoint value.

The flow control valve is suitable for applications in medical technology within the bounds of the specified technical characteristics.

For applications with special requirements, such as with regard to hygiene and sterility, additional measures may be required.

Low energy consumption

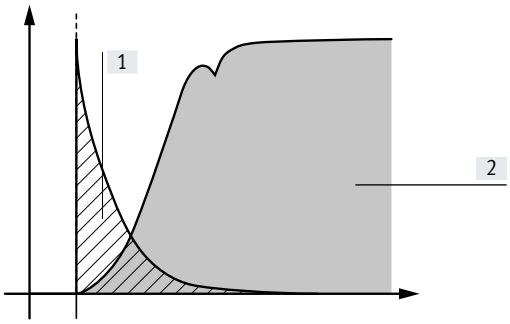

Y-axis: Current I
X-axis: Time t
[1] Striped area: Piezo valve
[2] Grey area: Solenoid valve

Compared with solenoid valves, proportional valves with piezo technology require virtually no energy to maintain an active state thanks to their capacitive principle. The piezo valve operates like a capacitor: it needs current only at the start in order to charge the piezoceramics.

No further energy is needed to maintain its state. The valves therefore generate no heat. They consume up to 95% less energy than solenoid valves, which permanently require an electrical current.

Mounting

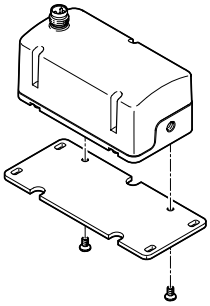

The valve VEMD is mounted on the wall mounting VAME-P14-W using two screws.

Product range overview

	Function	Description	Nominal operating voltage	Setpoint value		Flow rate control range	Operating pressure	
			[V DC]	[V]	[mA]	[l_n/min]	[MPa]	[bar]
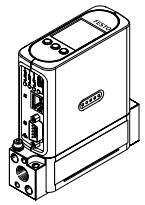	Proportional flow control valve with display, nominal width 6 mm	Mass flow controller, 2-way valve, normally closed	24	0 ... 10 1 ... 5	4 ... 20	4 ... 200	0.1 ... 0.6	1 ... 6
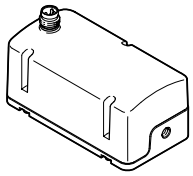	Proportional flow control valve without display, nominal width 1.4 mm		24 12	0.2 ... 10	–	0 ... 20	0 ... 0.25	0 ... 2.5
	Proportional flow control valve without display, nominal width 6 mm		12	0 ... 10 1 ... 5	4 ... 20	4 ... 200	0.1 ... 0.6	1 ... 6

Peripherals overview

VEMD mounting on H-rails

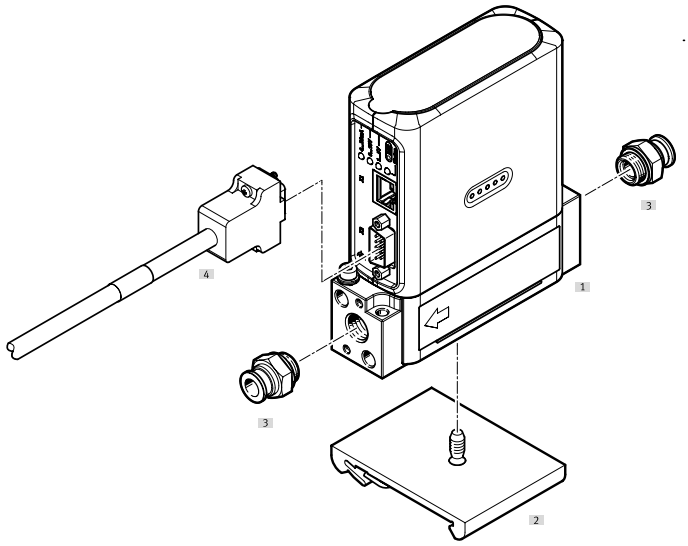

Designation		Brief description	→ Page/Internet
[1]	Proportional flow control valve VEMD	–	11
[2]	H-rail mounting CAFM	For mounting the valve	12
[3]	Push-in fitting QS	For connecting tubing with standard O.D.	12
[4]	Connecting cable KMP6	–	12

VEMD on mounting plate

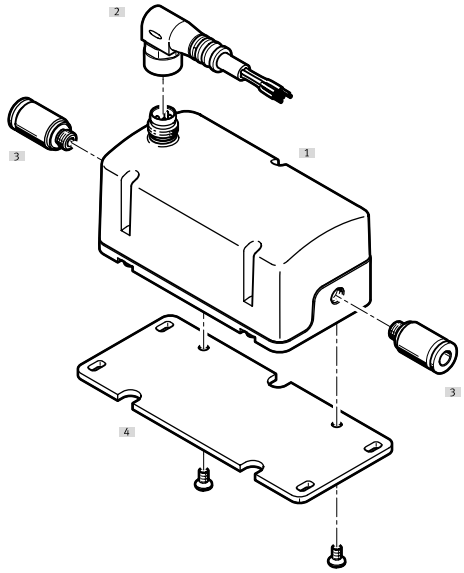

Designation		Brief description	→ Page/Internet
[1]	Proportional flow control valve VEMD	–	11
[2]	Connecting cable NEBU	–	11
[3]	Push-in fitting QSM/NPQM	For connecting tubing with standard O.D.	11
[4]	Mounting plate VAME-P14	For mounting the valve	11

Type codes

001	Series	
VEMD	Proportional flow control valve	

002	Variant	
	Plug and play	

003	Directional control valve type	
L	In-line valve	

004	Valve function	
6	2/2-way valve, normally closed	

005	Nominal width	
14	1.4 mm	
60	6 mm	

006	Flow rate range	
20	20 l/min	
200	200 l/min	

007	Pressure range [bar]	
D9	0 ... 6	
D21	0 ... 2.5	

008	Pneumatic connection	
G14	G1/4	
M5	M5	

009	Nominal operating voltage	
1	24 V DC	
5	12 V DC	
5Y	12 V DC to 26 V DC	

010	Bus protocol/activation	
	None	
MP	Multiprotocol	

011	Electrical connection	
M1	Multi-pin with SUB-D plug	
R1	Individual connector M8, 4-pin	

012	Display	
	None	
D	Display	

013	Setpoint input for individual valves	
V4	0.2 ... 10 V	
VA	0 ... 10 V and 4 ... 20 mA	

Datasheet

- Flow rate control range
  0 ... 20 l_n/min

- Voltage
  12, 24 V DC

- Operating pressure
  0 ... 0.25 MPa

General technical data		Nominal width 1.4 mm	Nominal width 6 mm
Valve function		2-way proportional flow regulator	
Flow rate control range[1]	[l_n/min]	0 ... 20	4 .. 200
Dimensions W x L x H	[mm]	37x70x31	116x38x124
Pneumatic connection 1, 2		Female thread M5	Female thread G1/4
Type of mounting		Direct mounting via thread	Direct mounting via through-hole
Mounting position		Any	
Flow direction		Not reversible	
Product weight	[g]	92	630

1) The flow is calibrated at the factory to the physical standard conditions in accordance with DIN 1343 (1013 mbar, 0°C)

Electrical data				
		VEMD-L-6-14-20-D21-M5-1-R1-V4	VEMD-L-6-14-20-D21-M5-5-R1-V4	VEMD-L6-60-...
Electrical connection		Plug, M8x1, 4-pin, to EN 61076-2-104		Straight socket, Sub-D, 9-pin open end, 9-wire
Nominal operating voltage	[V DC]	24	12	24
Operating voltage range	[V DC]	22 ... 26.4	11.1 ... 13.2	12 ... 24
Analogue input signal range	[V]	0.2 ... 10		0 ... 5
		–		0 ... 10
	[mA]	–		0 ... 20
Analogue output signal range	[V]	0.2 ... 10		0 ... 10
		–		1 ... 5
	[mA]	–		4 ... 20
Setpoint value	[V]	0.2 ... 10		Modbus
Max. electrical power consumption	[W]	1		8.5
Max. current consumption	[mA]	40	65	–
Duty cycle	[%]	100		
Reverse polarity protection		For operating voltage connections		
Degree of protection		IP40, in any mounting position		IP40
		IP51, in horizontal mounting position		–

Datasheet

Operating and environmental conditions		Nominal width 1.4 mm	Nominal width 6 mm
Operating pressure	[MPa]	0 ... 0.25	0.1 ... 0.6
	[bar]	0 ... 2.5	1 ... 6
Overload pressure	[MPa]	0.6	0.8
	[bar]	6	8
	[psi]	87	116
Burst pressure	[MPa]	1	1.8
	[bar]	10	18
	[psi]	145	261
Medium		• Oxygen (oxygen applications according to IEC 60601-1 only on request) • Compressed air to ISO 8573-1:2010 [5:4:1] • Inert gases • Nitrogen	• Argon • Compressed air to ISO 8573-1:2010 [5:3:1] • Carbon dioxide • Oxygen • Nitrogen
Note on the medium		Lubricated operation not possible	
Ambient conditions		Not suitable for use in an oxygen-enriched environment according to IEC 60601-1	Cleanest possible ambient air, dry
Special characteristics		Oxygen-compatible to DIN EN 1797	
Accuracy of flow rate	[%]	± (4% o.m.v. + 1.25% FS)	± (2% o.m.v. + 1% FS)
Repetition accuracy FS	[%]	1	
Hysteresis FS	[%]	2.5	–
Linearity error FS	[%]	2	–
Temperature coefficient K	[%]	0.1	–
Ambient temperature	[°C]	0 ... 50	5 ... 40
Temperature of medium	[°C]	5 ... 40	
Storage temperature	[°C]	– 20 ... 70	
Certification		RCM	C-Tick
		–	RCM
		–	c UL us - Listed (OL)
Conforms to standard		EN 61000-6-2 (EMC)	IEC 61010-1
		EN 61000-6-3 (EMC)	–
CE marking (see declaration of conformity)		To EU EMC Directive[1)]	
		To EU RoHS Directive[1)]	
UKCA marking (see declaration of conformity)		UK regs EMC[1)]	
		UK regs RoHS[1)]	
KC mark		KC EMC	

1) For information about the area of use, see the EC declaration of conformity at: www.festo.com/catalogue/... ➔ Support/Downloads.
If the devices are subject to usage restrictions in residential, commercial or light-industrial environments, further measures for the reduction of the emitted interference may be necessary.

Materials	Nominal width 1.4 mm	Nominal width 6 mm
Seals	EPDM, NBR	EPDM, FPM
Housing	Reinforced PA	Anodised aluminium / reinforced PA, PC
Note on materials	RoHS-compliant	
PWIS conformity	VDMA24364 zone III	

Circuit symbol

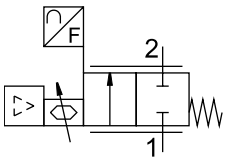

2-way valve, normally closed

Pin allocation

	Pin	Function	
		VEMD-L-6-14-20-D21-M5-1-R1-V4	VEMD-L-6-14-20-D21-M5-5-R1-V4
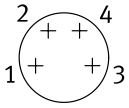	1	+24 V DC supply voltage	+12 V DC supply voltage
	2	+ Setpoint value 0.2 ... 10 V	
	3	GND	
	4	+ Actual value 0.2 ... 10 V	

Datasheet

Flow rate qn as a function of setpoint value s, nominal width 1.4 mm

Complete range of values

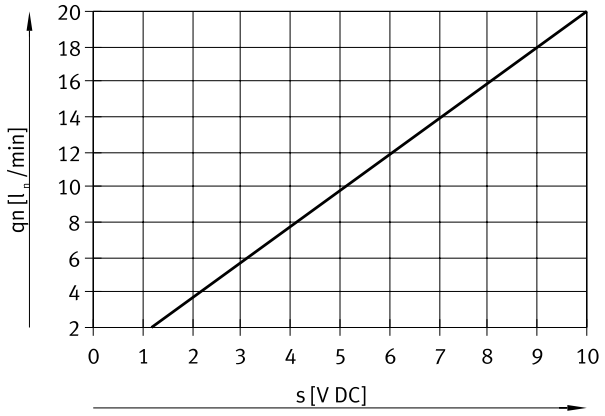

The range in detail

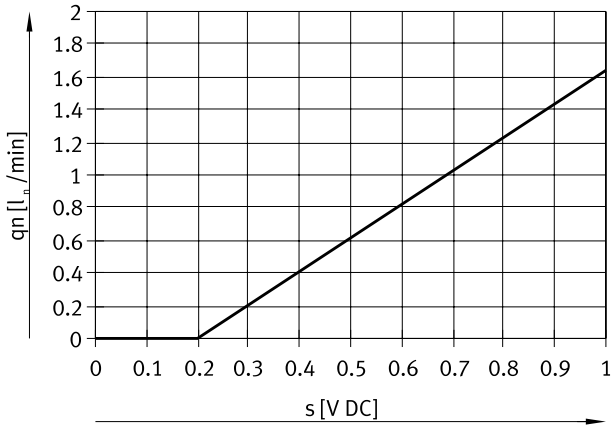

Formula for calculating the setpoint value s as a function of the required nominal flow rate

$$s = \frac{9{,}8 \cdot (qn + 4 \div 9{,}8)}{20}$$

Maximum flow rate plotted against operating pressure, at room temperature, nominal width 1.4 mm

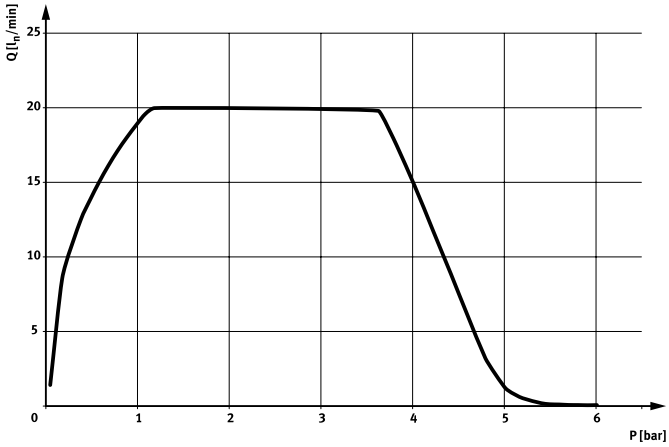

Datasheet

Dimensions Download CAD data ➔ www.festo.com

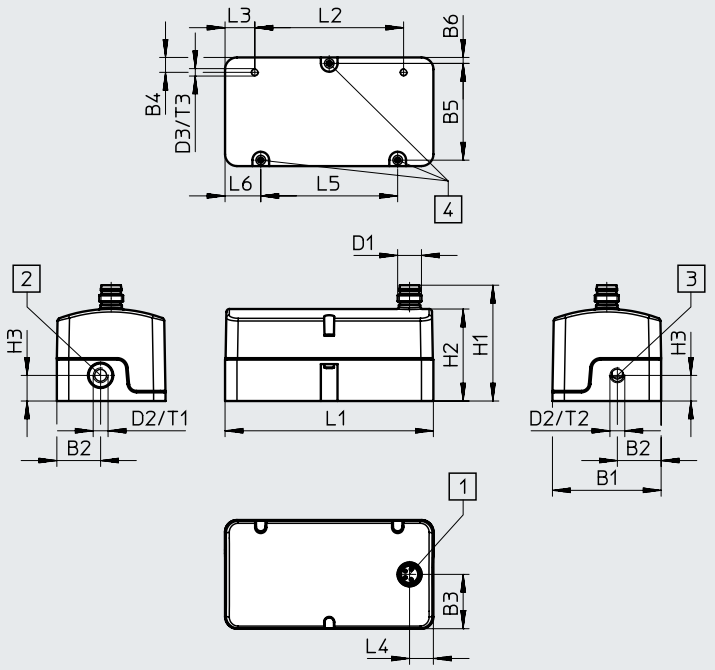

[1] Connecting plug, 4-pin
[2] Pressure supply port 1
[3] Working port 2
[4] Mounting points through-holes Ø 2.2 mm

Type	B1	B2	B3	B4	B5	B6	D1	D2	D3
VEMD	36.5	14.7	18.3	5	32.5	2	M8x1	M5	M2.5

Type	H1	H2	H3	L1	L2	L3	L4	L5	L6	T1	T2	T3
VEMD	38.9	30.9	8.6	70	50	10	8	46	12	8	5	5

Dimensions Download CAD data ➔ www.festo.com

Wall mounting

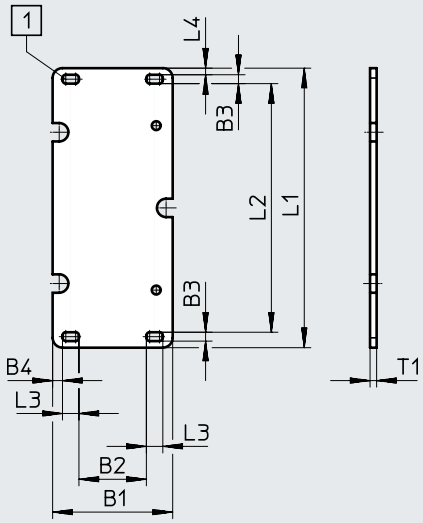

[1] Mounting recess

Type	B1	B2	B3	B4	L1	L2	L3	L4	T1
VAME-P14-W	36.5	20.5	2.7	3	85	75.6	5	2	2

Datasheet

Dimensions Download CAD data ➔ www.festo.com

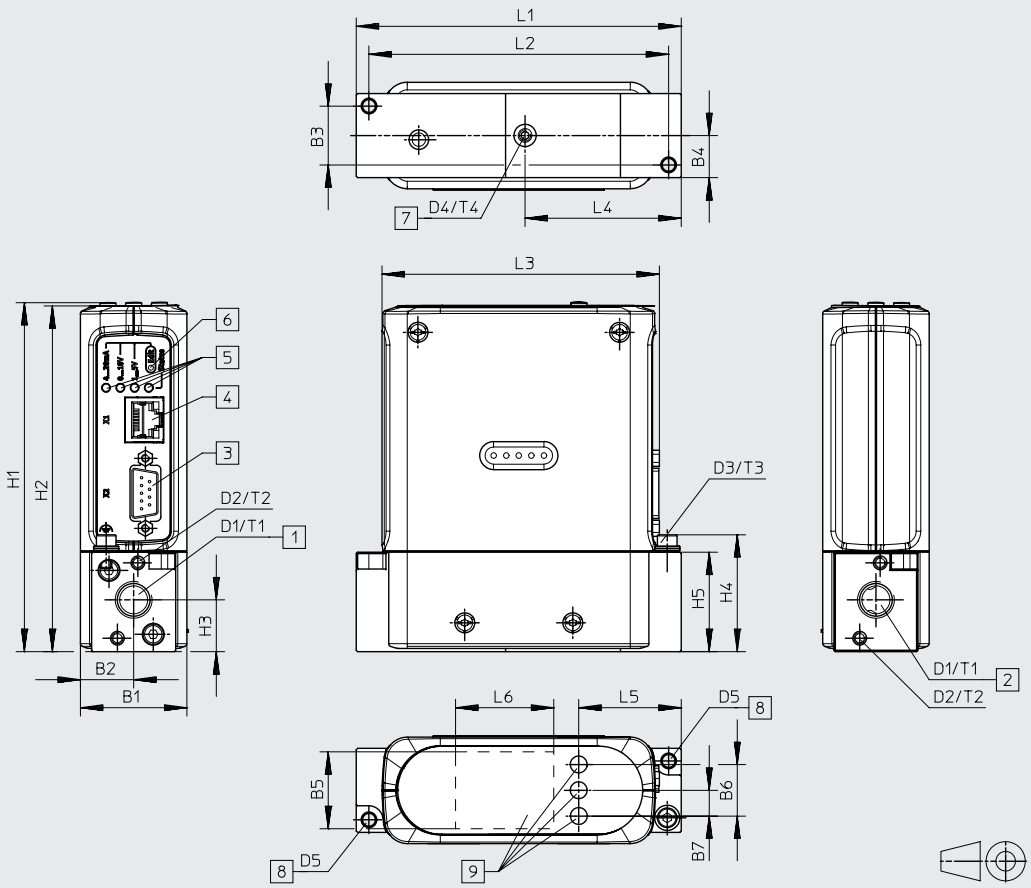

[1] Working air/pneumatic input
[2] Exhaust air/pneumatic output
[3] Sub-D connection
[4] RJ45 connection (Ethernet)
[5] LED indicator
[6] „Edit end user“ button
[7] H-rail connection
[8] Connection for wall mounting
[9] Display with operating buttons

Type	B1	B2	B3	B4	B5	B6	B7
VEMD-L-6-60-200-D9-G14-5YMPM1-VA	38	19	21	15	–	–	–
VEMD-L-6-60-200-D9-G14-5YMPM1D-VA					27.5	18.4	9.2

Type	D1 Ø	D2 Ø	D3 Ø	D4 Ø	D5 Ø	H1	H2	H3	H4	H5
VEMD-L-6-60-200-D9-G14-5YMPM1-VA	G1/4	M4	M4	M4	4.6	124.6	123.5	18.5	42	35.5
VEMD-L-6-60-200-D9-G14-5YMPM1D-VA										

Type	L1	L2	L3	L4	L5	L6	T1	T2	T3	T4
VEMD-L-6-60-200-D9-G14-5YMPM1-VA	116	107	100	55.8	–	–	13	8	8	10
VEMD-L-6-60-200-D9-G14-5YMPM1D-VA					36.6	35				

Accessories

Ordering data

	Description	Nominal width [mm]	Operating pressure [MPa]	Operating pressure [bar]	Nominal operating voltage [V DC]	Part no.	Type
Proportional flow control valve							
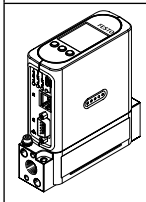	Mass flow controller, 2-way valve, normally closed, with display	6	0.1 ... 0.6	1 ... 6	24	**8163830**	**VEMD-L-6-14-200-D22-G14-5YMPM1D-VA**
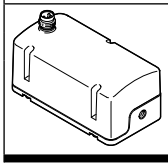	Mass flow controller, 2-way valve, normally closed, without display	6	0.1 ... 0.6	1 ... 6	24	**8163825**	**VEMD-L-6-60-200-D22-G14-5YMPM1-VA**
		1.4	0 ... 0.25	0 ... 2.5	24	**8086472**	**VEMD-L-6-14-20-D21-M5-1-R1-V4**
		1.4			12	**8086473**	**VEMD-L-6-14-20-D21-M5-5-R1-V4**

Ordering data

	Description			Part no.	Type
Connecting cable, for nominal width 1.4 mm					Datasheets ➔ Internet: nebu
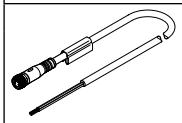	Straight socket, M8x1, 4-pin Open end, 4-wire		2.5 m	**541342**	**NEBU-M8G4-K-2.5-LE4**
			5 m	**541343**	**NEBU-M8G4-K-5-LE4**
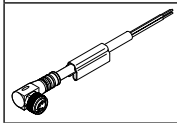	Angled socket, M8x1, 4-pin Open end, 4-wire		2.5 m	**541344**	**NEBU-M8W4-K-2.5-LE4**
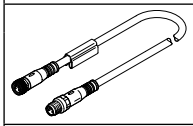	Straight socket, M8x1, 4-pin Straight plug M8x1, 4-pin		2.5 m	**554035**	**NEBU-M8G4-K-2.5-M8G4**
			5 m	**541345**	**NEBU-M8W4-K-5-LE4**
Wall mounting, for nominal width 1.4 mm					
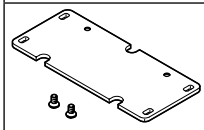	For mounting the valve			**5225721**	**VAME-P14-W**
Push-in fitting, male thread M5, for nominal width 1.4 mm					
	With internal hex	Metal design	For tubing O.D. 4 mm	**558657**	**NPQM-DK-M5-Q4-P10**
			For tubing O.D. 6 mm	**558658**	**NPQM-DK-M5-Q6-P10**
		Polymer design	For tubing O.D. 3 mm	**153313**	**QSM-M5-3-I**
			For tubing O.D. 4 mm	**153315**	**QSM-M5-4-I**
			For tubing O.D. 6 mm	**153317**	**QSM-M5-6-I**
	With external hex	Metal design	For tubing O.D. 3 mm	**153302**	**QSM-M5-3**
			For tubing O.D. 4 mm	**153304**	**QSM-M5-4**
			For tubing O.D. 6 mm	**153306**	**QSM-M5-6**

Accessories

Ordering data						
	Description				Part no.	Type
Connecting cable, for nominal width 6 mm						Datasheets ➔ Internet: nebu
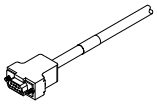	Straight socket, Sub-D, 9-pin open end, 9-wire		2.5 m		**531184**	**KMP6-09P-8-2,5**
			5 m		**531185**	**KMP6-09P-8-5**
			10 m		**531186**	**KMP6-09P-8-10**
H-rail mounting, for nominal width 6 mm						
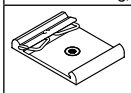	For mounting the valve				**570043**	**CAFM-F1-H**
Push-in fitting, male thread G1/4, for nominal width 6 mm						
	With external hex	Metal design	For tubing O.D. 8 mm	Pack size: 10 units	**186099**	**QS-G1/4-8**
				Pack size: 50 units	**132040**	**QS-G1/4-8-50**