Vacuum generators VAD-M

Key features

Product overview

All Festo vacuum generators have a single-stage design and operate according to the Venturi principle.
The product series described below have been designed for a wide range of applications. The different performance classes of the individual product families make it possible to select vacuum generators tailored to suit the specific requirements of each application.

Standard and inline ejectors

VN

Data sheets ➔ Internet: vn

- Nominal width
  0.45 ... 3 mm
- Max. vacuum
  93%
- Temperature range
  0 ... +60°C

- A range of extremely effective generators suitable for use directly in the work space
- Available with straight or T-shaped housing
- Minimal space required
- Cost-effective
- No wearing parts
- Extremely fast evacuation time
- Vacuum switch (optional)
- Optional additional functions:
  – Integrated ejector pulse
  – Electrical control for vacuum ON/OFF
  – Combination of ejector pulse and actuation

VAD/VAK

Data sheets ➔ Internet: vad

- Nominal width
  0.5 ... 1.5 mm
- Max. vacuum
  80%
- Temperature range
  –20 ... +80°C

- Range of vacuum generators with sturdy aluminium housing
- VAK-...: integrated volume,
  VAD-...: connection for external volume
- Maintenance-free
- VAK: Reliable setting down of workpieces

Key features

Compact ejectors

OVEM

Data sheets ➔ Internet: ovem

- Nominal width
  0.45 ... 2 mm
- Max. vacuum
  93%
- Temperature range
  0 ... +50°C

- Compact design
- Minimal installation work required
- Short switching times
- Integrated solenoid valves for vacuum ON/OFF and ejector pulse
- Filter with display
- Vacuum sensor with LCD display for continuous monitoring of the entire vacuum system
- Optional air saving function
- Reliable setting down of workpieces
- Blocking of multiple vacuum generators on a common supply manifold

VADM/VADMI

Data sheets ➔ Internet: vadm

- Nominal width
  0.45 ... 3 mm
- Max. vacuum
  85%
- Temperature range
  0 ... +60°C

- Compact design
- Minimal installation work required
- Short switching times
- Integrated solenoid valve (on/off)
- VADMI: additional integrated solenoid valve for ejector pulse
- Filter with display
- Optional air saving function
- Vacuum switch (optional)
- Reliable setting down of workpieces

VAD-M

➔ Page 5

- Nominal width
  0.7 ... 2 mm
- Max. vacuum
  85%
- Temperature range
  0 ... +40°C

- Compact design
- Minimal installation work required
- Short switching times
- Integrated solenoid valve (on/off)
- VAD-M-I: additional integrated solenoid valve for ejector pulse
- Reliable setting down of workpieces

Key features

At a glance

- Compact and sturdy design
- Short switching times thanks to integrated solenoid valves
- With manual override
- Maintenance-free because there are no moving parts
- With integrated silencer for reducing exhaust noise

Vacuum generator VAD-M...-...

The compressed air supply for these vacuum generators is controlled by the integrated solenoid valve.
When the power supply is switched on, the valve is actuated and the flow of compressed air from 1 (P) to 3 (R) generates a vacuum at port 2, operating on the ejector principle.
Suction stops when the power supply to the valve is switched off.
Workpieces with a smooth and air-tight surface are suctioned up and held firmly.

- Integrated solenoid valve for:
  – Vacuum ON/OFF

Vacuum generator VAD-M...-I-... with ejector pulse

With two integrated solenoid valves for vacuum ON/OFF, ejector pulse for faster reduction of vacuum and manual override.
Compressed air enters the vacuum generator following the application of a voltage signal to the integrated solenoid valve, thereby creating a vacuum.
Once the power supply is switched off at the vacuum valve (B) and switched on at the ejector pulse valve (A), the vacuum is rapidly purged at port 2 (V) as a result of the application of pressure.

- Two integrated solenoid valves:
  – Vacuum ON/OFF
  – Ejector pulse

Peripherals overview and type codes

VAD-MYB

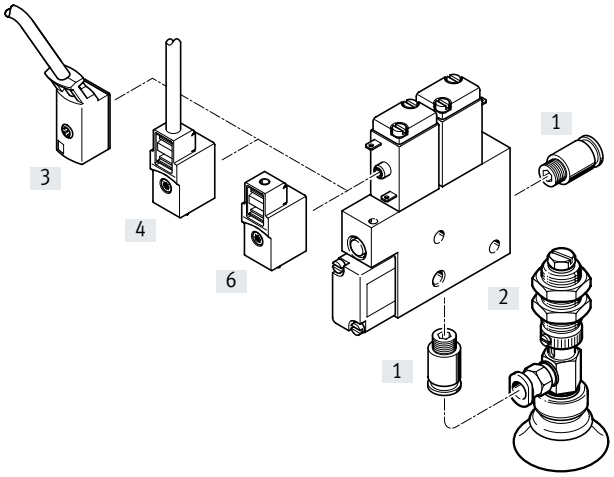

VAD-ME

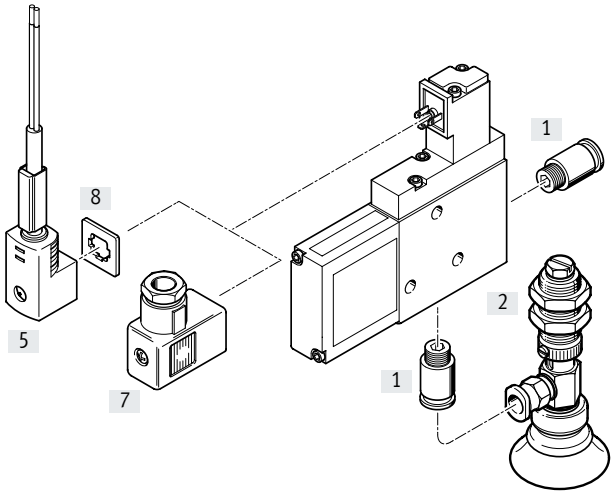

Mounting components and accessories

		VAD-MYB	VAD-ME	→ Page/Internet
[1]	Push-in fitting QS	■	■	quick star
[2]	Suction gripper ESG	■	■	esg
[3]	Connecting cable KMYZ-2	■	–	kmyz-2
[4]	Plug socket with cable KMYZ-4	■	–	kmyz-4
[5]	Plug socket with cable KME-1	–	■	kme-1
[6]	Plug socket MSSD-ZBZC	■	–	mssd-zbzc
[7]	Plug socket MSSD-E	–	■	mssd-e
[8]	Illuminating seal ME-LD	–	■	me-ld

Type codes

001	Series	
VAD	Vacuum generator, electric	

002	Electrical connection	
MYB	Solenoid coil	
ME	Solenoid coil	

003	Additional function	
	Without ejector pulse	
I	Electric ejector pulse	

004	Vacuum connection	
1/8	Female thread G1/8	
1/4	Female thread G1/4	
3/8	Female thread G3/8	

Data sheet

- Temperature range
  0 ... +40°C
- Operating pressure
  1.5 ... 8 bar

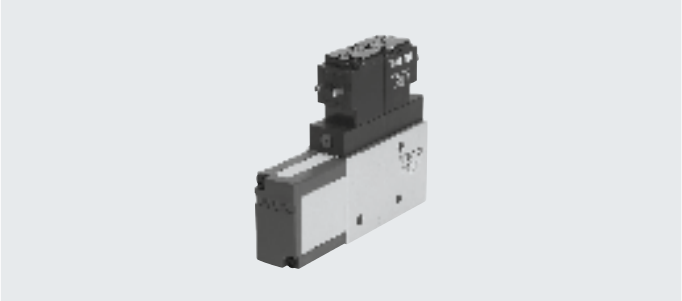

General technical data					
Type		VAD-MYB-...	VAD-ME-...		
Size		G1/8	G1/8	G1/4	G3/8
Design		T-shape			
Mounting position		Any			
Ejector characteristics		High vacuum			
Type of mounting		With female thread			
Pneumatic connection 1/2		M5/G1/8	G1/8/G1/8	G1/8/G1/4	G1/4/G3/8
Nominal width of Laval nozzle	[mm]	0.7	0.95	1.4	2.0
Max. vacuum	[%]	85			
Duty cycle	[%]	100			
Degree of protection		IP65			

Operating and environmental conditions		
Operating pressure	[bar]	1.5 ... 8
Operating medium		Compressed air to ISO 8573-1:2010 [7:4:4]
Note on operating/ pilot medium		Lubricated operation not possible
Ambient temperature	[°C]	0 ... +40
Corrosion resistance class CRC[1)]		2

1) Corrosion resistance class CRC 2 to Festo standard FN 940070
Moderate corrosion stress. Indoor applications in which condensation can occur. External visible parts with primarily decorative surface requirements which are in direct contact with a normal industrial environment.

Weights [g]				
Type		VAD-MYB-...	VAD-ME-...		
Size		G1/8	G1/8	G1/4	G3/8
VAD-M...		80	125	210	240
VAD-M...-I-...		135	160	250	280

Data sheet

Vacuum ΔP_u as a function of operating pressure p

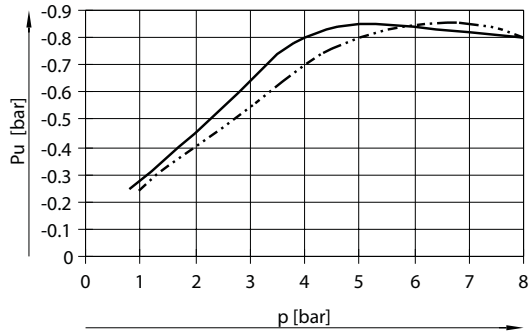

VAD-MYB-1/8; VAD-ME-1/4; VAD-ME-3/8
VAD-ME-1/8

Evacuation time t [s] for 1 litre volume at 6 bar operating pressure

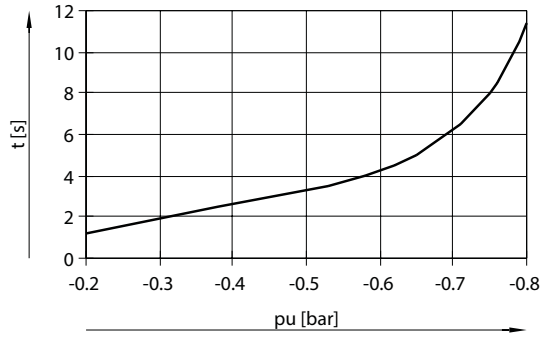

VAD-MYB-1/8

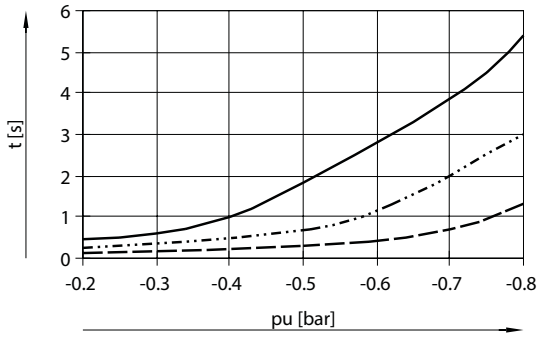

VAD-ME-1/8
VAD-ME-1/4
VAD-ME-3/8

Air consumption Q as a function of operating pressure p

VAD-MYB-1/8

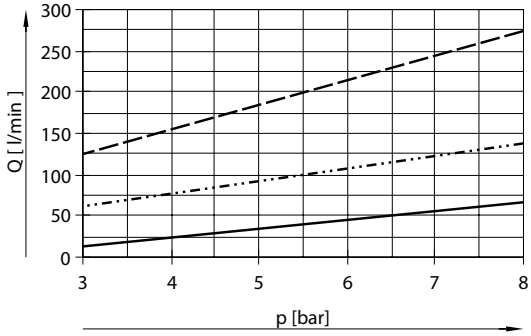

VAD-ME-1/8
VAD-ME-1/4
VAD-ME-3/8

Efficiency η as a function of vacuum Δp at P_{nom} 6 bar

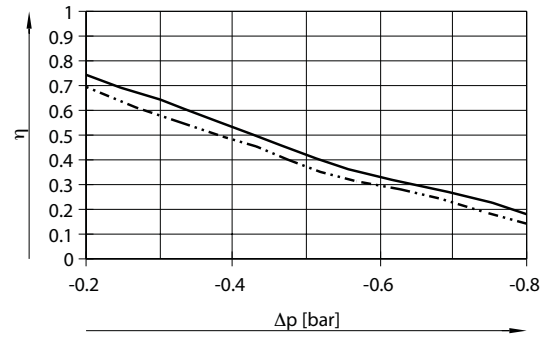

VAD-ME
VAD-MYB

Data sheet

Dimensions

VAD-MYB-1/8

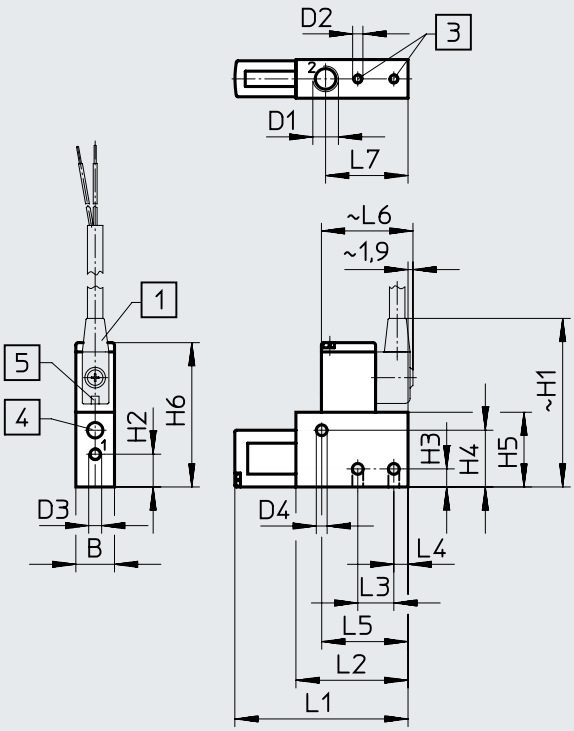

VAD-ME-1/8/-1/4/-3/8

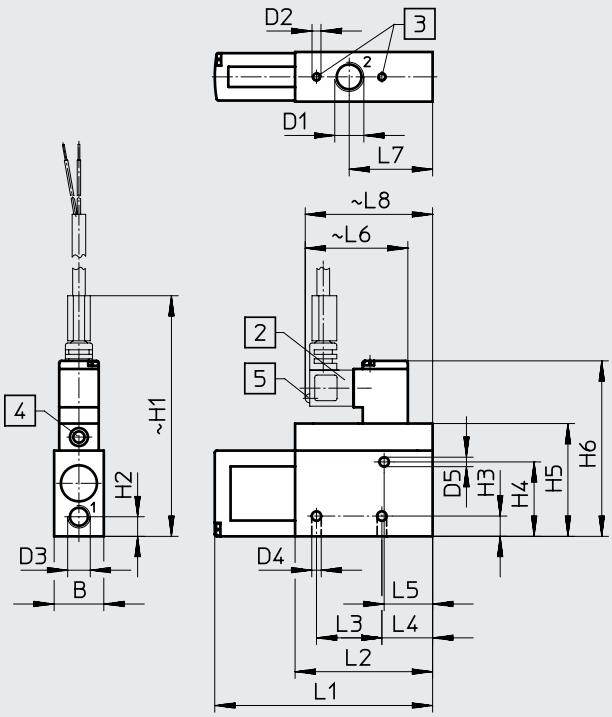

[1] Connecting cable KMYZ-2-24-... with 2-wire cable, 2.5 m or 5 m long, 3.4 mm ø (2x0.25 mm²)

[2] Plug socket with cable KME-1-24-... with 2-wire cable, 2.5 m or 5 m long, 5.6 mm ø (2x0.75 mm²)

[3] Mounting thread

[4] Manual override

[5] Yellow LED

Type	B	D1	D2	D3	D4	D5	H1	H2	H3	H4
VAD-MYB-1/8	15	G1/8	M4	M5	4.2	–	62.5	12.7	7	22
VAD-ME-1/8	18	G1/8	M4	G1/8	4.2	3.2	93	14.2	6.5	20
VAD-ME-1/4	22	G1/4	M4	G1/8	4.2	4.2	106.8	8.7	9	33
VAD-ME-3/8	22	G3/8	M5	G1/4	5.2	5.2	113.1	11	10	39

Type	H5	H6	L1	L2	L3	L4	L5	L6	L7	L8
VAD-MYB-1/8	29	56	67.2	43.5	14	5.5	33.5	34.6	–	–
VAD-ME-1/8	36	64	76	61	27	19	30.5	48	32.5	58
VAD-ME-1/4	50	77.8	96.6	61	29	22.5	21.5	48	37	58
VAD-ME-3/8	56	84.1	101.8	61	32	23.5	21.5	48	39.5	58

Data sheet

Dimensions

VAD-MYB-I-1/8

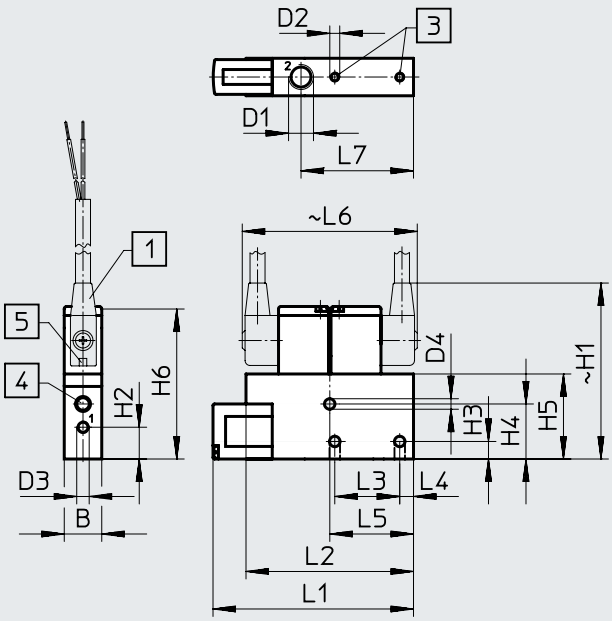

VAD-ME-I-1/8/-1/4/-3/8

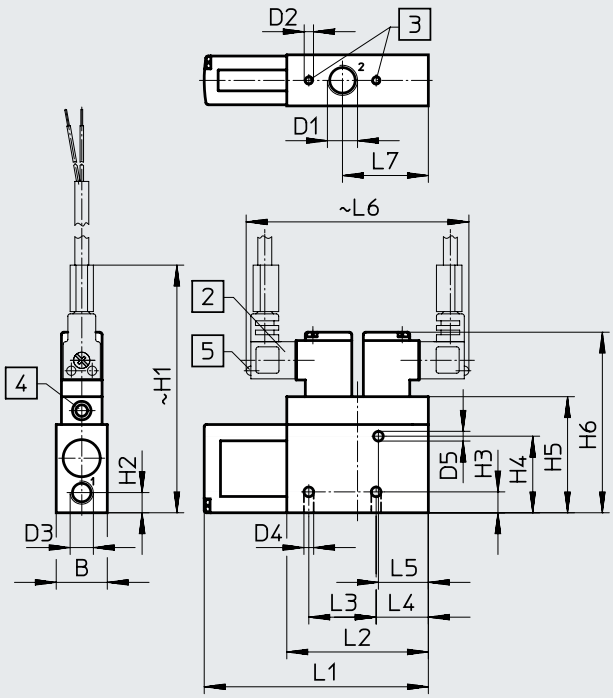

[1] Connecting cable KMYZ-2-24-... with 2-wire cable, 2.5 m or 5 m long, 3.4 mm ø (2x0.25 mm²)

[2] Plug socket with cable KME-1-24-... with 2-wire cable, 2.5 m or 5 m long, 5.6 mm ø (2x0.75 mm²)

[3] Mounting thread

[4] Manual override

[5] Yellow LED

Type	B1	D1	D2	D3	D4	D5	H1	H2	H3	H4
VAD-MYB-I-1/8	15	G1/8	M4	M5	4.2	–	67.5	12.7	7	22
VAD-ME-I-1/8	18	G1/8	M4	G1/8	4.2	3.2	93	14.2	6.5	20
VAD-ME-I-1/4	22	G1/4	M4	G1/8	4.2	4.2	106.8	8.7	9	33
VAD-ME-I-3/8	22	G3/8	M5	G1/4	5.2	5.2	113.1	11	10	39

Type	H5	H6	L1	L2	L3	L4	L5	L6	L7
VAD-MYB-I-1/8	34	58.5	80.2	67	26	5.5	33.5	70	45
VAD-ME-I-1/8	36	64	76	61	27	19	30.5	96	32.5
VAD-ME-I-1/4	50	77.8	96.6	61	29	22.5	21.5	96	37
VAD-ME-I-3/8	56	84	101.8	61	32	23.5	21.5	96	39.5

Ordering data

Pneumatic connection	Solenoid coils	Without ejector pulse		With ejector pulse	
		Part no.	Type	Part no.	Type
G1/8	MYB	**35 553**	**VAD-MYB-1/8**	**35 530**	**VAD-MYB-I-1/8**
G1/8	ME	**35 554**	**VAD-ME-1/8**	**35 531**	**VAD-ME-I-1/8**
G1/4	ME	**35 555**	**VAD-ME-1/4**	**35 532**	**VAD-ME-I-1/4**
G3/8	ME	**35 556**	**VAD-ME-3/8**	**35 533**	**VAD-ME-I-3/8**