# Cylinders with holding brake DFLC/G

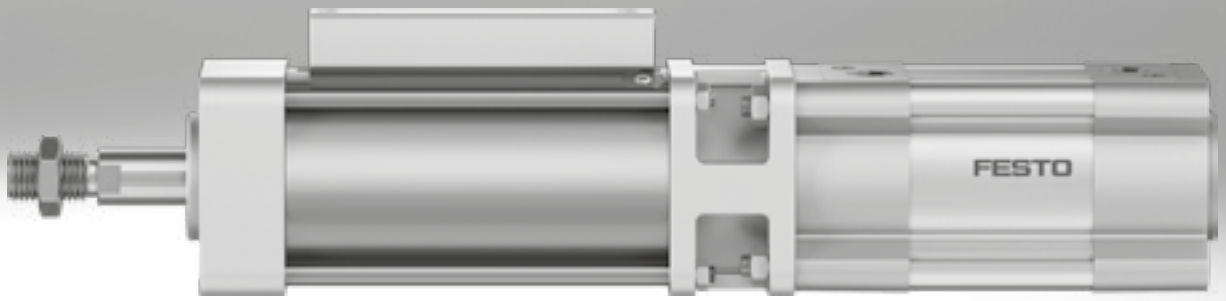

# Characteristics

## At a glance

Holding brakes are generally used to dynamically brake a movement or to prevent round rods of different lengths from starting up at any position. The double-acting cylinders with holding brake DFLC/G can brake or clamp the piston rod. During clamping, the piston rod is securely locked so that the application of external force does not produce any relative motion. A rod can be locked at any position along the stroke, whether in the end positions or the intermediate positions. This provides protection in the event of a pressure failure and secures the piston rod during intermediate stops for process operations.

- The clamping force is released when compressed air is supplied to the holding brake
- Static holding force up to 17000 N
- The cylinders with holding brake are based on ISO 15552 (previously also VDMA 24562, ISO 6431, NF E49 003.1, UNI 10290)

**Note**

The cylinders with holding brake DFLC/G-...-S are a safety device as defined in the Machinery Directive 2006/42/EC and have been tested and certified to relevant standards. Additional information is available at www.festo.com/sp ➔ Certificates.
The cylinders with holding brake DFLC/G-...-EX4-S are suitable for use in ATEX zones in "static holding" mode.

Possible safety functions:
- Holding function: retaining the piston rod by clamping with frictional locking
- Emergency braking function: stopping the movement of the piston rod by clamping with frictional locking

The safety functions are triggered by switching off the compressed air supply or by the failure of the compressed air supply.

## Cushioning

[PPV] Pneumatic cushioning adjustable at both ends

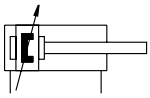

- The drive is fitted with pneumatic end-position cushioning, which can be adapted by the operator for maximum performance according to the moved mass and speed.
- Very powerful

## Position sensing

[A] Via proximity switch

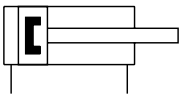

- For monitoring the switching status of the holding brake

## Corrosion protection

[R3] High corrosion protection

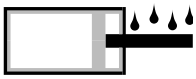

- Protects the drive against corrosion

## EU certification

[EX4] II 2GD

- ATEX category for gas II 2G
- ATEX category for dust II 2D
- Type of ignition protection for gas Ex h IIC T4 Gb
- Type of ignition protection for dust Ex h IIIC T120°C Db
- Explosion-proof ambient temperature −20 ≤ Ta ≤ +60

## Certification

[S] Safety device

- To Machinery Directive 2006/42/EC

## Type codes

| 001 | Series | |
|---|---|---|
| **DFLC** | Cylinder with holding brake | |

| 002 | Piston diameter | |
|---|---|---|
| **40** | 40 | |
| **63** | 63 | |
| **100** | 100 | |

| 003 | Stroke | |
|---|---|---|
| **...** | 10 ... 2000 | |

| 004 | Cushioning | |
|---|---|---|
| **PPV** | Pneumatic cushioning, adjustable at both ends | |

| 005 | Position sensing | |
|---|---|---|
| **A** | For proximity sensor | |

| 006 | Corrosion protection | |
|---|---|---|
| | Standard | |
| **R3** | High corrosion protection | |

| 007 | EU certification | |
|---|---|---|
| | None | |
| **EX4** | II 2GD | |

| 008 | Certification | |
|---|---|---|
| **S** | Safety component to Machinery Directive 2006/42/EC | |

## Peripherals overview

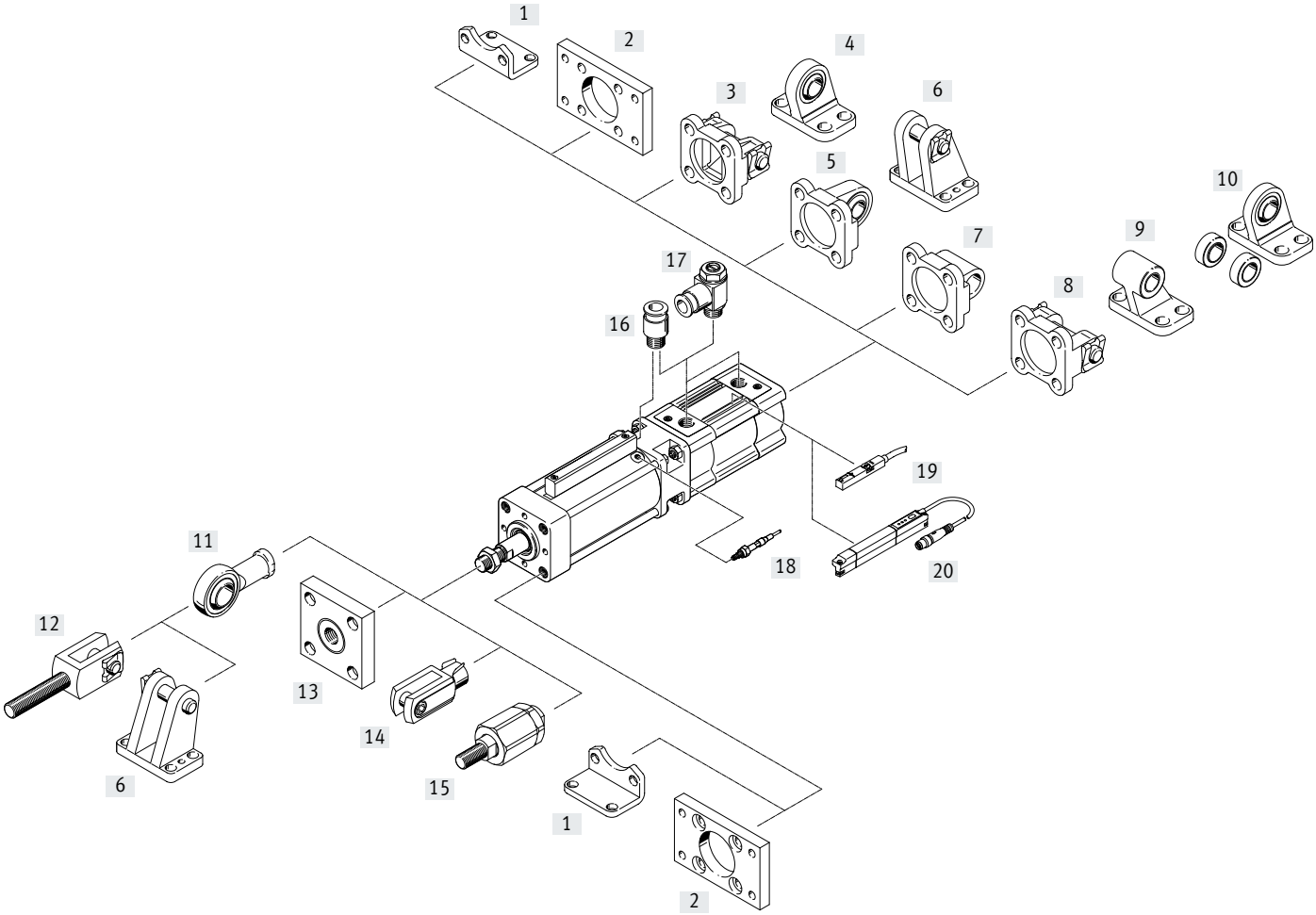

# Peripherals overview

| Accessories | | | |
|---|---|---|---|
| | Type/order code | Description | ➔ Page/Internet |
| [1] | Foot mounting<br>HNC/CRHNC | For bearing or end caps | 22 |
| [2] | Flange mounting<br>FNC/CRFNG | • For bearing or end caps<br>• Suitable for emergency stop applications/dynamic braking | 23 |
| [3] | Swivel flange<br>SNC | For end caps | 25 |
| [4] | Clevis foot<br>LSNG | Weld-on, with spherical bearing | 31 |
| [5] | Swivel flange<br>SNCS/SNCS-...-R3 | With spherical bearing for end caps | 26 |
| [6] | Clevis foot<br>LBG/LBG-...-R3 | – | 31 |
| [7] | Swivel flange<br>SNCL | For end caps | 27 |
| [8] | Swivel flange<br>SNCB/SNCB-...-R3 | For end caps | 28 |
| [9] | Clevis foot<br>LNG/CRLNG | – | 31 |
| [10] | Clevis foot<br>LSN | With spherical bearing | 31 |
| [11] | Rod eye<br>SGS/CRSGS | With spherical bearing | 32 |
| [12] | Rod clevis<br>SGA | With male thread | 32 |
| [13] | Coupling piece<br>KSG | For compensating radial deviations | 32 |
| [14] | Rod clevis<br>SG/CRSG | Permits a swivelling movement of the cylinder in one plane | 32 |
| [15] | Self-aligning rod coupler<br>FK, CRFK | For compensating radial and angular deviations | 32 |
| [16] | Push-in fitting<br>QS | For connecting compressed air tubing with standard O.D. | qs |
| [17] | One-way flow control valve<br>GRLA | For speed regulation | 35 |
| [18] | Sensor kit<br>DADG | • Inductive sensor kit for status sensing of the clamping function<br>• Not included in scope of delivery | 33 |
| [19] | Proximity switch<br>SMT-8M-A | • For sensing the piston position<br>• Not included in scope of delivery | 34 |
| | Proximity switch<br>SDBT-MS | • For sensing the piston position<br>• Not included in scope of delivery | 34 |
| [20] | Position transmitter<br>SDAT-MHS | • Continuously senses the position of the piston<br>• Has an analogue output<br>• Not included in scope of delivery | 35 |

**Note**

Only flange mounting FNC/CRFNG is permissible for emergency stop applications/dynamic braking.
Additional accessories for this application are available on request.

# Data sheet

Function

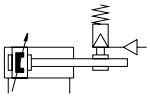

- Ø - Diameter
  40 ... 100 mm
- | - Stroke length
  10 ... 2000 mm

| General technical data | | | | |
|---|---|---|---|---|
| Piston diameter | | 40 | 63 | 100 |
| Design | | Piston | | |
| | | Piston rod | | |
| | | Profile barrel | | |
| Variants | | Piston rod at one end | | |
| Mode of operation | | Double-acting | | |
| Pneumatic connection | | | | |
| Cylinder | | G1/4 | G3/8 | G1/2 |
| Holding brake | | G1/8 | G1/8 | G3/8 |
| Piston rod thread | | M12x1.25 | M16x1.5 | M20x1.5 |
| Piston rod end | | Male thread | | |
| Cushioning | | Pneumatic cushioning adjustable at both ends | | |
| Cushioning length | [mm] | 19 | 22 | 31 |
| Position sensing | | Via proximity switch | | |
| Type of mounting | | Via female thread | | |
| | | With accessories | | |
| Type of clamping with active direction | | At both ends | | |
| | | Clamping via spring force, released via compressed air | | |
| Mounting position | | Any | | |

| Operating and environmental conditions | | | | |
|---|---|---|---|---|
| Piston diameter | | 40 | 63 | 100 |
| Cylinder | | | | |
| Operating pressure | [bar] | 0.6 ... 8 | | |
| Holding brake | | | | |
| Min. release pressure | [bar] | 3.8 | | |
| Max. permissible test pressure | [bar] | 8 | | |
| Operating medium | | Compressed air to ISO 8573-1:2010 [7:4:4] | | |
| Note on operating/ pilot medium | | Operation with lubricated medium not possible | | |
| Ambient temperature[1] | [°C] | –20 ... +80 | | –10 ... +80 |
| Corrosion resistance class CRC[2] | | | | |
| [ ] Standard | | 1 | | |
| [R3] High corrosion protection | | 3 | | |

1) Note operating range of proximity switches.
2) Corrosion resistance class CRC 1 to Festo standard FN 940070
Low corrosion stress. Dry internal application or transport and storage protection. Also applies to parts behind coverings, in the non-visible interior area, and parts which are covered in the application (e.g. drive trunnions).
Corrosion resistance class CRC 3 to Festo standard FN 940070
High corrosion stress. Outdoor exposure under moderate corrosive conditions. Externally visible parts with primarily functional surface requirements which are in direct contact with a normal industrial environment.

# Data sheet

| **Safety characteristics** | | | |
|---|---|---|---|
| Piston diameter | 40 | 63 | 100 |
| Conforms to standard | This product is based on ISO 15552 (previously also VDMA 24562, ISO 6431, NF E49 003.1, UNI 10290) | | |
| Safety function | Holding and stopping a movement | | |
| Performance Level (PL) | Stopping, holding, blocking a movement/category 1, Performance Level c | | |
| Certification | German Technical Control Board (TÜV) | | |
| Certificate issuing authority | German Technical Control Board (TÜV) CA 697 | | |
| CE marking (see declaration of conformity)[1] | To EU Machinery Directive | | |
| UKCA marking (see declaration of conformity)[1] | To UK instructions for machines | | |

1) More information: www.festo.com/catalogue/dflc ⟶ Support/Downloads

| **ATEX** | | | |
|---|---|---|---|
| Piston diameter | 40 | 63 | 100 |
| ATEX category for gas | II 2G | | |
| Type of ignition protection for gas | Ex h IIC T4 Gb | | |
| ATEX category for dust | II 2D | | |
| Type of ignition protection for dust | Ex h IIIC T120°C Db | | |
| Explosion-proof ambient temperature [°C] | −20 ≤ Ta ≤ +60 | | |

| **Weight [g]** | | | |
|---|---|---|---|
| Piston diameter | 40 | 63 | 100 |
| Basic weight with 0 mm stroke | 2930 | 6185 | 19120 |
| Additional weight per 10 mm stroke | 37 | 62 | 101 |
| | | | |
| Moving mass with 0 mm stroke | 502 | 955 | 1940 |
| Additional moving mass per 10 mm stroke | 16 | 25 | 40 |

| **Forces [N]** | | | |
|---|---|---|---|
| Piston diameter | 40 | 63 | 100 |
| Theoretical force at 6 bar, advancing | 754 | 1870 | 4712 |
| Theoretical force at 6 bar, retracting | 633 | 1682 | 4418 |
| Static holding force | 1350 | 3300 | 8200 |

Note

The specified holding force refers to a static load. If this value is exceeded, slippage may occur. Dynamic forces occurring during operation must not exceed the static holding force if slippage is to be avoided. The holding brake is backlash-free in the clamped condition when varying loads are applied to the piston rod.

Lateral loads and bending moments on the piston rod can impair the function. (Make sure that the load on the piston rod is only in the direction of movement.)

Actuation:
The holding brake may only be released when the forces on the piston rod have reached equilibrium. Otherwise there is a risk of accidents due to the sudden movement of the piston rod. Blocking off the compressed air supply at both ends (e.g. with a 5/3-way valve) does not provide any safety.

# Data sheet

## Load mass m as a function of piston speed $v_0$

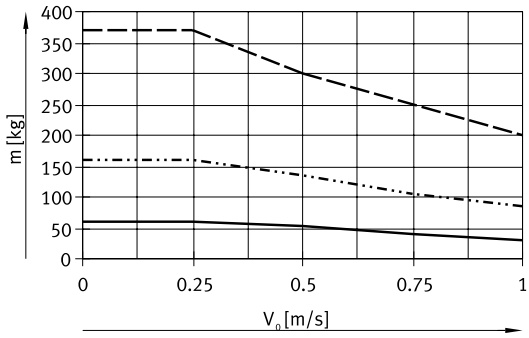


- DFLC-100
- DFLC-63
- DFLC-40

## Stopping distance $sk_0$ as a function of piston speed $v_0$

### ⌀ 40

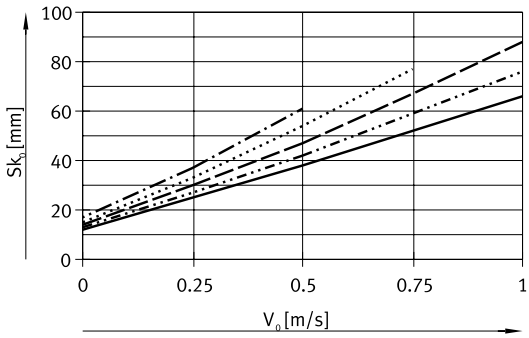


- 50 kg
- 40 kg
- 30 kg
- 20 kg
- 10 kg

### ⌀ 63

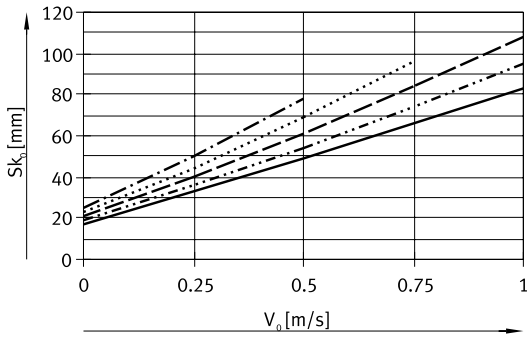


- 125 kg
- 100 kg
- 75 kg
- 50 kg
- 25 kg

### ⌀ 100

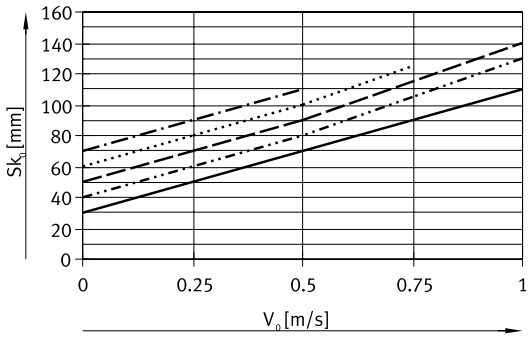


- 300 kg
- 250 kg
- 200 kg
- 150 kg
- 100 kg

**Note**

All data in the graphs is intended exclusively for the purposes of preselection when configuring the emergency braking function and must be checked mathematically and in practice prior to commissioning. Additional information is available at www.festo.com/sp ➔ User documentation.

# Data sheet

## Materials

Sectional view

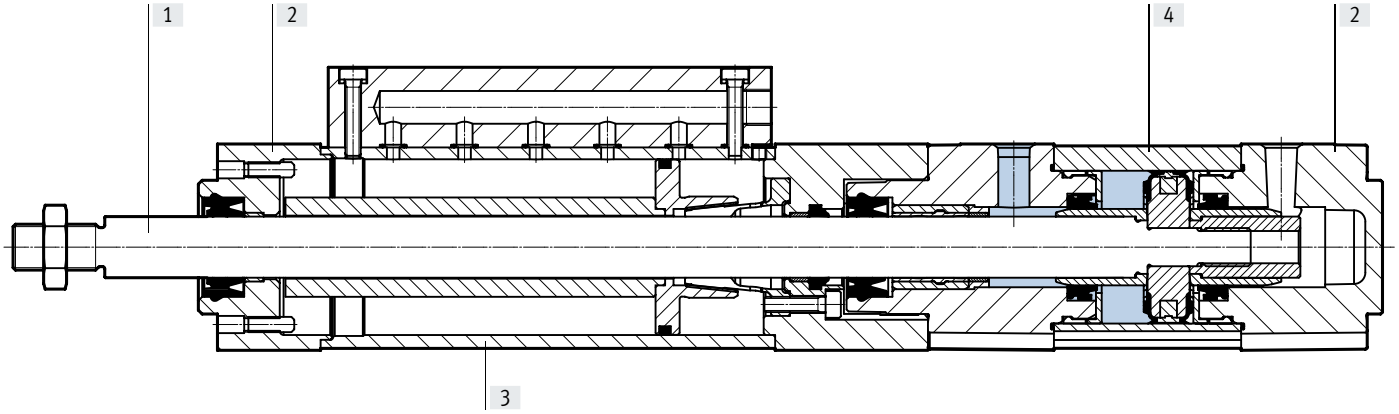


| Cylinder with holding brake | | |
|---|---|---|
| [1] | Piston rod | Hard-chrome-plated steel |
| [2] | Cover | Die-cast aluminium |
| | | Wrought aluminium alloy |
| [3] | Housing | |
| | DFLC-... | Steel |
| | DFLC-...-R3 | High-alloy stainless steel |
| [4] | Cylinder barrel | |
| | DFLC-... | Smooth-anodised wrought aluminium alloy |
| | DFLC-...-R3 | High-alloy stainless steel |
| – | Seals | NBR |
| | | TPE-U(PU) |
| | PWIS conformity | VDMA24364-B2-L |
| | Note on materials | RoHS-compliant |

# Data sheet

**Dimensions**

Download CAD data ➔ www.festo.com

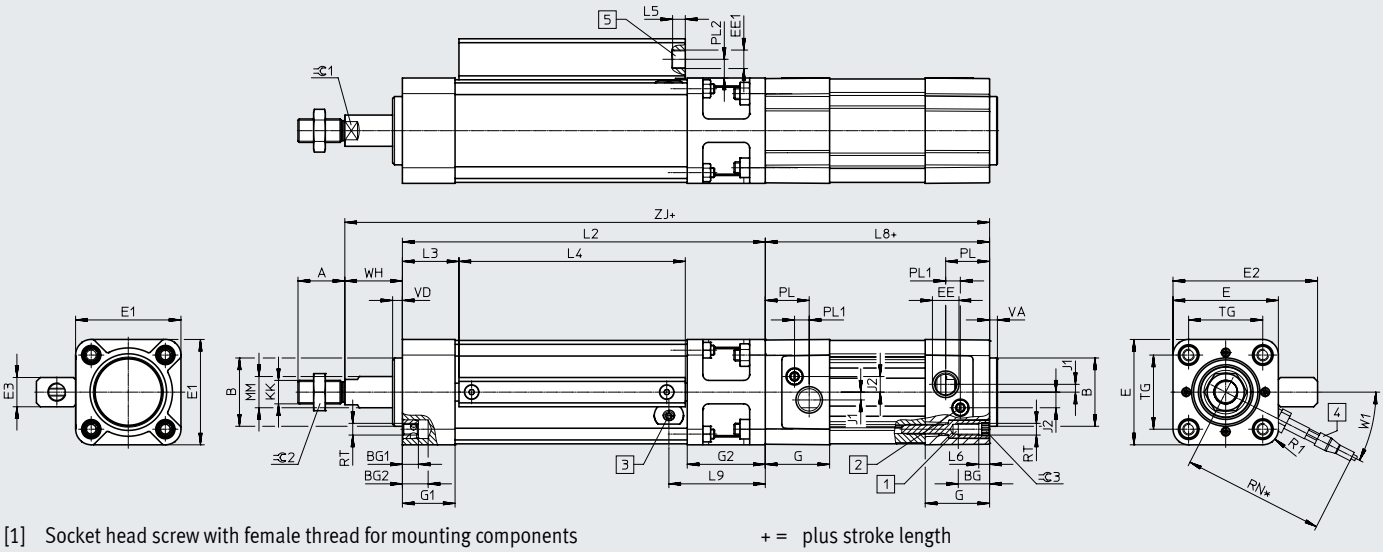


[1] Socket head screw with female thread for mounting components
[2] Adjusting screw for adjustable end-position cushioning
[3] Position for proximity switch (thread M6x0.75)
[4] Sensor kit DADG-D-F8
[5] Connection to release clamping function

+ = plus stroke length
* = installation space for sensor kit DADG-D-F8

## Data sheet

| ø<br>[mm] | A<br>-0.5 | B<br>ø<br>d11 | BG<br>min. | BG1 | BG2 | E<br>±0.8 | E1<br>+0.5 | E2<br>±1 | E3 | EE |
|---|---|---|---|---|---|---|---|---|---|---|
| 40 | 24 | 35 | 16 | 8 | 13.2 | 54 | 54 | 74.1 | 15 | G1/4 |
| 63 | 32 | 45 | 16 | 9 | 14.8 | 78 | 75 | 98.1 | 15 | G3/8 |
| 100 | 40 | 55 | 17 | 10 | 14.8 | 124 | 110 | 152.1 | 22 | G1/2 |

| ø<br>[mm] | EE1 | G | G1 | G2 | J1 | J2 | KK | L2<br>±1 | L3 | L4 |
|---|---|---|---|---|---|---|---|---|---|---|
| 40 | G1/8 | 33 | 27 | 40 | 4 | 8 | M12x1.25 | 186 | 29 | 116 |
| 63 | G1/8 | 40.5 | 30 | 44 | 6.25 | 12.75 | M16x1.5 | 210 | 38.4 | 122.5 |
| 100 | G3/8 | 48 | 35 | 54 | 10 | 13.5 | M20x1.5 | 255 | 47.1 | 148.5 |

| ø<br>[mm] | L5 | L6 | L8+<br>±0.4 | L9 | MM<br>ø | PL | PL1 | PL2 | R1 | RN |
|---|---|---|---|---|---|---|---|---|---|---|
| 40 | 6.5 | 5.5 | 105 | 49.4 | 16 | 22.5 | 7.5 | 9.6 | R8 | 98 |
| 63 | 6.5 | 6 | 121 | 53.6 | 20 | 27.5 | 9 | 9.6 | R10 | 100 |
| 100 | 8 | – | 138 | 65.3 | 25 | 31.5 | 7.5 | 13.6 | R15 | 120 |

| ø<br>[mm] | RT | TG<br>±0.3 | VA<br>-0.2 | VD<br>±0.2 | W1 | WH<br>+3.2/-1 | ZJ+<br>+2.6/-0.4 | =⊂1 | =⊂2 | =⊂3 |
|---|---|---|---|---|---|---|---|---|---|---|
| 40 | M6 | 38 | 4 | 5 | 27° | 28.7 | 319.7 | 13 | 19 | 6 |
| 63 | M8 | 56.5 | 4 | 5 | 20° | 35.9 | 366.9 | 17 | 24 | 8 |
| 100 | M10 | 89 | 4 | 5 | 20° | 49.3 | 442.3 | 22 | 30 | 6 |

# Ordering data – Modular product system

**Ordering table**

| Size | | 40 | 63 | 100 | Conditions | Code | | Enter code |
|---|---|---|---|---|---|---|---|---|
| Module no. | | 8073331 | 8073332 | 8073333 | | | | |
| Function | | Cylinder with holding brake, double-acting | | | | **DFLC** | | DFLC |
| Piston diameter | [mm] | 40 | 63 | 100 | | **–...** | | |
| Stroke | [mm] | 10 ... 2000 | | | | **–...** | | |
| Cushioning | | Pneumatic cushioning, adjustable at both ends | | | | **–PPV** | | –PPV |
| Position sensing | | Via proximity switch | | | | **A** | | A |
| Corrosion protection | | Standard | | | | | | |
| | | High corrosion protection | | | | **–R3** | | |
| EU certification | | None | | | | | | |
| | | II 2GD | | | | **–EX4** | | |
| Certification | | Safety device to Machinery Directive 2006/42/EC | | | | **–S** | | –S |

## Type codes

| 001 | Series | |
|---|---|---|
| **DFLG** | Cylinder with holding brake | |

| 002 | Piston diameter | |
|---|---|---|
| **160** | 160 | |

| 003 | Stroke | |
|---|---|---|
| **...** | 10 ... 2000 | |

| 004 | Cushioning | |
|---|---|---|
| **PPV** | Pneumatic cushioning, adjustable at both ends | |

| 005 | Position sensing | |
|---|---|---|
| **A** | For proximity sensor | |

| 006 | Corrosion protection | |
|---|---|---|
| | Standard | |
| **R3** | High corrosion protection | |

| 007 | EU certification | |
|---|---|---|
| | None | |
| **EX4** | II 2GD | |

| 008 | Certification | |
|---|---|---|
| **S** | Safety component to Machinery Directive 2006/42/EC | |

## Peripherals overview

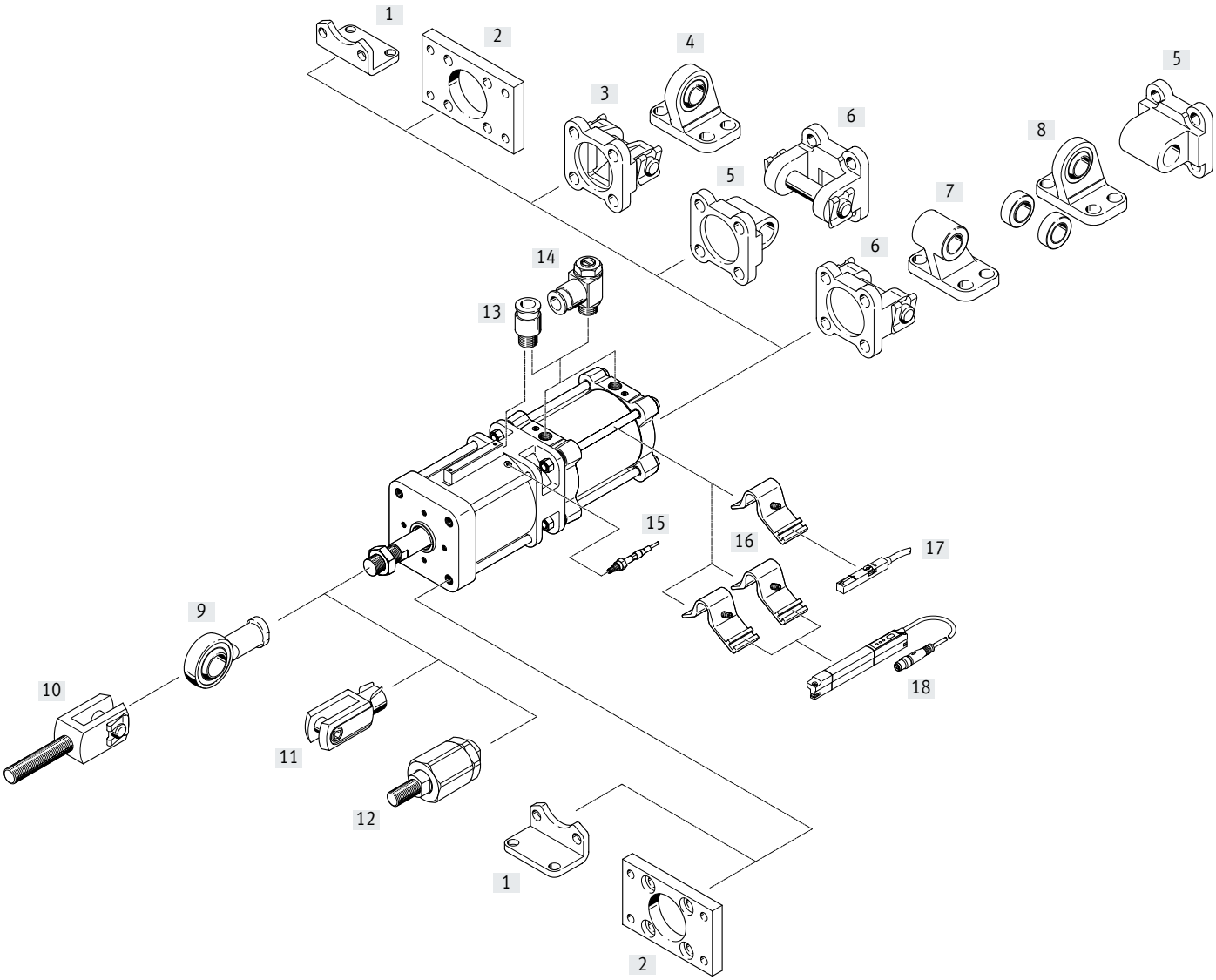

# Peripherals overview

| Accessories | | | |
|---|---|---|---|
| | Type/order code | Description | → Page/Internet |
| [1] | Foot mounting<br>HNG | For bearing and end caps, corresponds to MS1 to ISO 15552 | 22 |
| [2] | Flange mounting<br>FNG | • For bearing or end caps, corresponds to MF1/MF2 to ISO 15552<br>• Suitable for emergency stop applications/dynamic braking | 24 |
| [3] | Swivel flange<br>SNG | For end caps | 29 |
| [4] | Clevis foot<br>LSNG | With spherical bearing | 31 |
| [5] | Swivel flange<br>SNGL | For end caps, corresponds to MP2 to ISO 15552 | 29 |
| [6] | Swivel flange<br>SNGB | For end caps, corresponds to MP2 to ISO 15552 | 30 |
| [7] | Clevis foot<br>LN | For swivel flange SNGB | 31 |
| [8] | Clevis foot<br>LSN | With spherical bearing | 31 |
| [9] | Rod eye<br>SGS | With spherical bearing | 32 |
| [10] | Rod clevis<br>SGA | Suitable for spherical mounting of cylinders in conjunction with rod eye SGS | 32 |
| [11] | Rod clevis<br>SG | Permits a swivelling movement of the cylinder in one plane | 32 |
| [12] | Self-aligning rod coupler<br>FK | For compensating radial and angular deviations | 32 |
| [13] | Push-in fitting<br>QS | For connecting compressed air tubing with standard O.D. | qs |
| [14] | One-way flow control valve<br>GRLA | For speed regulation | 35 |
| [15] | Sensor kit<br>DADG | • Inductive sensor kit for status sensing of the clamping function<br>• Not included in scope of delivery | 33 |
| [16] | Sensor mounting<br>DASP | For proximity switch SME-8M-A and position transmitter SDAT-MHS | 35 |
| [17] | Proximity switch<br>SMT-8M-A | • For sensing the piston position<br>• Can be integrated in the cylinder profile barrel<br>• Not included in scope of delivery | 34 |
| | Proximity switch<br>SDBT-MS | • For sensing the piston position<br>• Can be integrated in the cylinder profile barrel<br>• Not included in scope of delivery | 34 |
| [18] | Position transmitter<br>SDAT-MHS | • Continuously senses the position of the piston<br>• Has an analogue output<br>• Can be integrated in the cylinder profile barrel<br>• 2 sensor mountings DASP are required for mounting<br>• Not included in scope of delivery | 35 |

**Note**

Only flange mounting FNG is permissible for emergency stop applications/dynamic braking.

Additional accessories for this application are available on request.

# Data sheet

Function

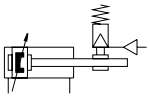

- Ø - Diameter
  160 mm
- | - Stroke length
  10 ... 2000 mm

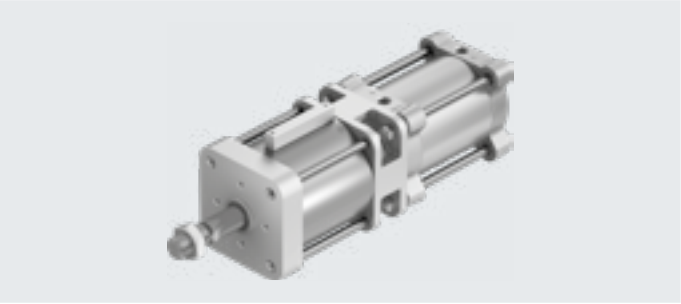

| General technical data | | |
|---|---|---|
| Piston diameter | | 160 |
| Design | | Piston |
| | | Piston rod |
| | | Profile barrel |
| Variants | | Piston rod at one end |
| Mode of operation | | Double-acting |
| Pneumatic connection | | |
| Cylinder | | G3/4 |
| Holding brake | | G3/8 |
| Piston rod thread | | M36x2 |
| Piston rod end | | Male thread |
| Cushioning | | Pneumatic cushioning adjustable at both ends |
| Cushioning length | [mm] | 48 |
| Position sensing | | Via proximity switch |
| Type of mounting | | Via female thread |
| | | With accessories |
| Type of clamping with active direction | | At both ends |
| | | Clamping via spring force, released via compressed air |
| Mounting position | | Any |

| Operating and environmental conditions | | |
|---|---|---|
| Piston diameter | | 160 |
| Cylinder | | |
| Operating pressure | [bar] | 0.6 ... 8 |
| Holding brake | | |
| Min. release pressure | [bar] | 3.8 |
| Max. permissible test pressure | [bar] | 8 |
| Operating medium | | Compressed air to ISO 8573-1:2010 [7:4:4] |
| Note on operating/ pilot medium | | Operation with lubricated medium not possible |
| Ambient temperature[1)] | [°C] | –20 ... +80 |
| Corrosion resistance class CRC[2)] | | |
| [ ] Standard | | 1 |
| [R3] High corrosion protection | | 3 |

1) Note operating range of proximity switches.
2) Corrosion resistance class CRC 1 to Festo standard FN 940070
Low corrosion stress. Dry internal application or transport and storage protection. Also applies to parts behind coverings, in the non-visible interior area, and parts which are covered in the application (e.g. drive trunnions).
Corrosion resistance class CRC 3 to Festo standard FN 940070
High corrosion stress. Outdoor exposure under moderate corrosive conditions. Externally visible parts with primarily functional surface requirements which are in direct contact with a normal industrial environment.

# Data sheet

| **Safety characteristics** | |
|---|---|
| Piston diameter | 160 |
| Conforms to standard | This product is based on ISO 15552 (previously also VDMA 24562, ISO 6431, NF E49 003.1, UNI 10290) |
| Safety function | Holding and stopping a movement |
| Performance Level (PL) | Stopping, holding, blocking a movement/category 1, Performance Level c |
| Certification | German Technical Control Board (TÜV) |
| Certificate issuing authority | German Technical Control Board (TÜV) CA 697 |
| CE marking (see declaration of conformity)[1] | To EU Machinery Directive |
| UKCA marking (see declaration of conformity)[1] | To UK instructions for machines |

1) More information: www.festo.com/catalogue/dflg ⟶ Support/Downloads

| **ATEX** | |
|---|---|
| Piston diameter | 160 |
| ATEX category for gas | II 2G |
| Type of ignition protection for gas | Ex h IIC T4 Gb |
| ATEX category for dust | II 2D |
| Type of ignition protection for dust | Ex h IIIC T120°C Db |
| Explosion-proof ambient temperature [°C] | −20 ≤ Ta ≤ +60 |

| **Weight [g]** | |
|---|---|
| Piston diameter | 160 |
| Basic weight with 0 mm stroke | 49660 |
| Additional weight per 10 mm stroke | 208 |
| | |
| Moving mass with 0 mm stroke | 7085 |
| Additional moving mass per 10 mm stroke | 97 |

| **Forces [N]** | |
|---|---|
| Piston diameter | 160 |
| Theoretical force at 6 bar, advancing | 12064 |
| Theoretical force at 6 bar, retracting | 11310 |
| Static holding force | 17000 |

Note

The specified holding force refers to a static load. If this value is exceeded, slippage may occur. Dynamic forces occurring during operation must not exceed the static holding force if slippage is to be avoided. The holding brake is backlash-free in the clamped condition when varying loads are applied to the piston rod.

Lateral loads and bending moments on the piston rod can impair the function. (Make sure that the load on the piston rod is only in the direction of movement.)

Actuation:
The holding brake may only be released when the forces on the piston rod have reached equilibrium. Otherwise there is a risk of accidents due to the sudden movement of the piston rod. Blocking off the compressed air supply at both ends (e.g. with a 5/3-way valve) does not provide any safety.

# Data sheet

**Load mass m as a function of piston speed $v_0$**

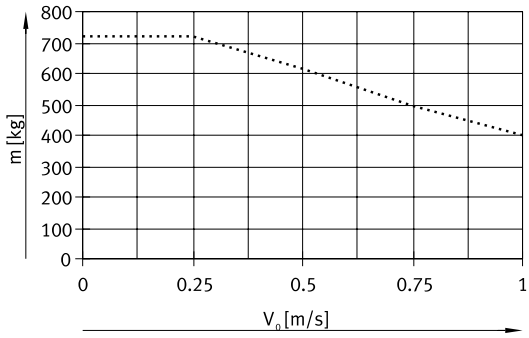


DFLG-160

**Stopping distance $sk_0$ as a function of piston speed $v_0$**

Ø 160

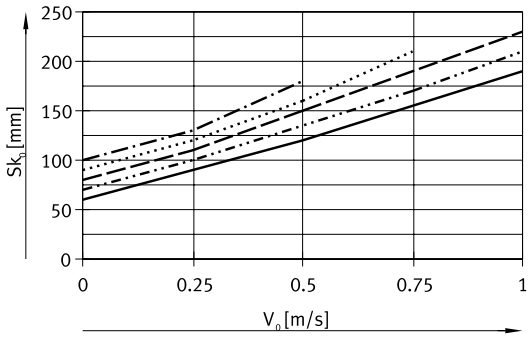


700 kg
600 kg
500 kg
400 kg
300 kg

**Note**

All data in the graphs is intended exclusively for the purposes of preselection when configuring the emergency braking function and must be checked mathematically and in practice prior to commissioning. Additional information is available at www.festo.com/sp ➔ User documentation.

# Data sheet

## Materials

Sectional view

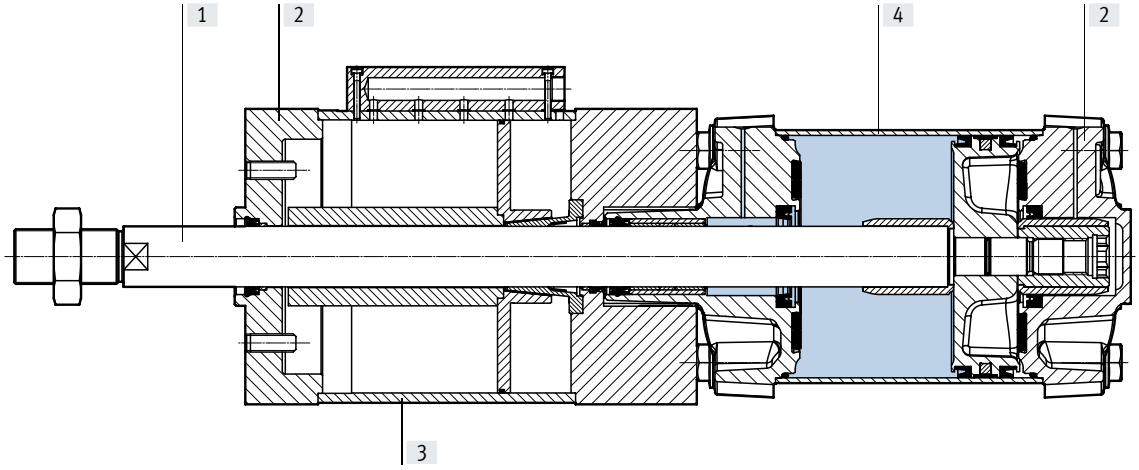


| Cylinder with holding brake | | |
|---|---|---|
| [1] | Piston rod | Hard-chrome-plated steel |
| [2] | Cover | Die-cast aluminium |
| | | Wrought aluminium alloy |
| [3] | Housing | |
| | DFLG-... | Steel |
| | DFLG-...-R3 | High-alloy stainless steel |
| [4] | Cylinder barrel | |
| | DFLG-... | Smooth-anodised wrought aluminium alloy |
| | DFLG-...-R3 | High-alloy stainless steel hochlegierter Stahl, rostfrei |
| – | Seals | NBR |
| | | TPE-U(PU) |
| | PWIS conformity | VDMA24364-B2-L |
| | Note on materials | RoHS-compliant |

# Data sheet

**Dimensions** Download CAD data ➔ www.festo.com

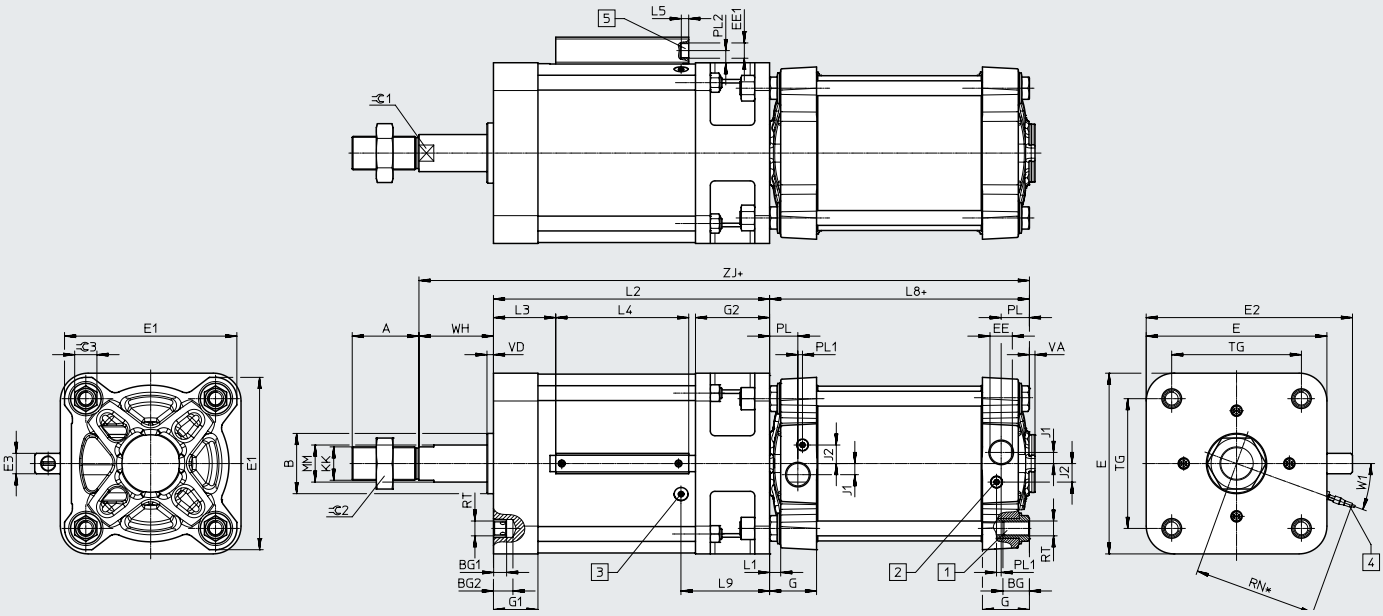


[1] Socket head screw with female thread for mounting components
[2] Adjusting screw for adjustable end-position cushioning
[3] Position for proximity switch (thread M6x0.75)
[4] Sensor kit DADG-D-F8
[5] Connection to release clamping function

+ = plus stroke length
* = installation space for sensor kit DADG-D-F8

| ø [mm] | A -0.5 | B ø d11 | BG min. | BG1 | BG2 | E ±0.8 | E1 ±0.9 | E2 ±1 | E3 | EE |
|---|---|---|---|---|---|---|---|---|---|---|
| 160 | 72 | 65 | 24 | 14 | 21 | 195 | 186 | 222.6 | 22 | G3/4 |

| ø [mm] | EE1 | G | G1 | G2 | J1 | J2 | KK | L1 | L2 ±1 | L3 |
|---|---|---|---|---|---|---|---|---|---|---|
| 160 | G3/8 | 50.7 | 48 | 80 | 12 | 20 | M36x2 | 12 | 298 | 67.2 |

| ø [mm] | L4 | L5 | L8+ ±1 | L9 | MM ø | PL | PL1 | PL2 | R | RN |
|---|---|---|---|---|---|---|---|---|---|---|
| 160 | 143.5 | 8 | 180 | 95.5 | 40 | 31 | 5 | 13.1 | R30 | 155 |

| ø [mm] | RT | TG ±1.1 | VA -1 | VD ±0.2 | W1 | WH +2.3/-2.3 | ZJ+ +2.3/-2.3 | =C1 | =C2 | =C3 |
|---|---|---|---|---|---|---|---|---|---|---|
| 160 | M16 | 140 | 6 | 7 | 20° | 80 | 558 | 36 | 55 | 24 |

## Ordering data – Modular product system

| Ordering table<br>Size | | 160 | Conditions | Code | | Enter code |
|---|---|---|---|---|---|---|
| Module no. | | 8073334 | | | | |
| Function | | Cylinder with holding brake, double-acting | | **DFLG** | | DFLG |
| Piston diameter | [mm] | 160 | | **–160** | | –160 |
| Stroke | [mm] | 10 ... 2000 | | **–...** | | |
| Cushioning | | Pneumatic cushioning, adjustable at both ends | | **–PPV** | | –PPV |
| Position sensing | | Via proximity switch | | **A** | | A |
| Corrosion protection | | Standard | | | | |
| | | High corrosion protection | | **–R3** | | |
| EU certification | | None | | | | |
| | | II 2GD | | **–EX4** | | |
| Certification | | Safety device to Machinery Directive 2006/42/EC | | **–S** | | –S |

# Accessories

**Foot mounting HNC/CRHNC**
for DFLC

Material:
HNC: galvanised steel
CRHNC: high-alloy steel
Free of copper and PTFE

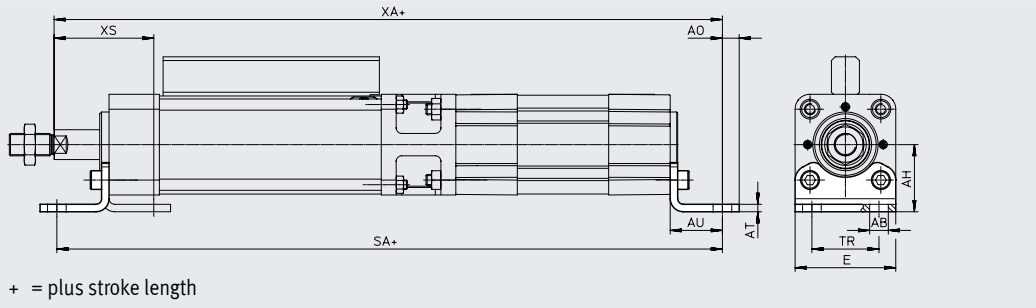


**Dimensions and ordering data**

| For diam. [mm] | AB ⌀ | AH | AO | AT | AU | E | SA | TR | XA | XS |
|---|---|---|---|---|---|---|---|---|---|---|
| 40 | 10 | 36 | 9 | 4 | 28 | 54 | 347 | 36 | 347.7 | 56.7 |
| 63 | 10 | 50 | 12.5 | 5 | 32 | 75 | 395 | 50 | 398.9 | 67.9 |
| 100 | 14.5 | 71 | 17.5 | 6 | 41 | 110 | 475 | 75 | 483.3 | 90.3 |

| For diam. [mm] | Basic type | | | | Corrosion-resistant | | | |
|---|---|---|---|---|---|---|---|---|
| | CRC[1] | Weight [g] | Part no. | Type[2] | CRC[1] | Weight [g] | Part no. | Type[2] |
| 40 | 2 | 193 | **174370** | **HNC-40** | 4 | 188 | **176938** | **CRHNC-40** |
| 63 | 2 | 436 | **174372** | **HNC-63** | 4 | 424 | **176940** | **CRHNC-63** |
| 100 | 2 | 1009 | **174374** | **HNC-100** | 4 | 990 | **176942** | **CRHNC-100** |

1) Corrosion resistance class CRC 2 to Festo standard FN 940070
Moderate corrosion stress. Indoor applications in which condensation can occur. External visible parts with primarily decorative surface requirements which are in direct contact with a normal industrial environment.
Corrosion resistance class CRC 4 to Festo standard FN 940070
Particularly high corrosion stress. Outdoor exposure under extreme corrosive conditions. Parts exposed to aggressive media, e.g. in the chemical or food industries. Such applications may need to be safeguarded by special tests (→ also FN 940082), using appropriate media.
2) Suitable for ATEX

**Foot mounting HNG**
for DFLG

Material:
Galvanised steel
Free of copper and PTFE

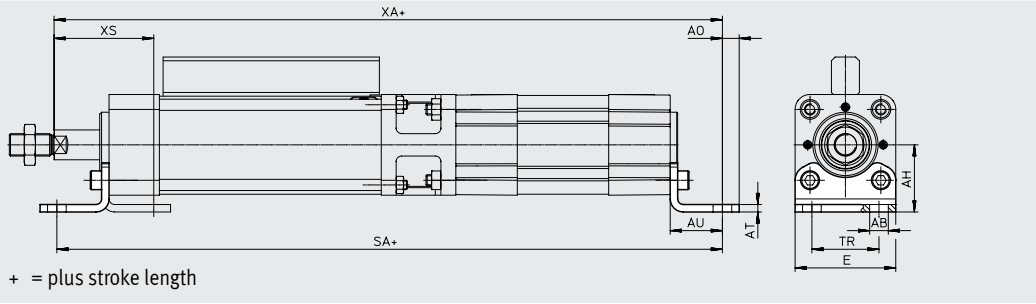


**Dimensions and ordering data**

| For diam. [mm] | AB ⌀ | AH | AO | AT | AU | E | SA | TR | XA | XS | CRC[1] | Weight [g] | Part no. | Type[2] |
|---|---|---|---|---|---|---|---|---|---|---|---|---|---|---|
| 160 | 18.5 | 115 | 20 | 10 | 60 | 169 | 598 | 115 | 618 | 140 | 2 | 3931 | **34476** | **HNG-160** |

1) Corrosion resistance class CRC 2 to Festo standard FN 940070
Moderate corrosion stress. Indoor applications in which condensation can occur. External visible parts with primarily decorative surface requirements which are in direct contact with a normal industrial environment.
2) Suitable for ATEX

# Accessories

**Flange mounting FNC/CRFNG**
for DFLC

Suitable for
emergency stop applications/
dynamic braking

Material:
FNC: galvanised steel
CRFNG: high-alloy steel
Free of copper and PTFE
RoHS-compliant

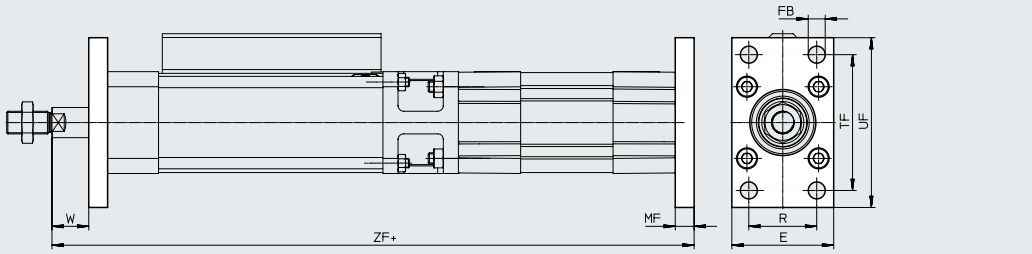


+ = plus stroke length

**Dimensions and ordering data**

| For diam. [mm] | E | FB ø H13 | MF | R | TF | UF | W | ZF |
|---|---|---|---|---|---|---|---|---|
| 40 | 54 | 9 | 10 | 36 | 72 | 90 | 18.7 | 329.7 |
| 63 | 75 | 9 | 12 | 50 | 100 | 120 | 23.9 | 378.9 |
| 100 | 110 | 14 | 16 | 75 | 150 | 175 | 33.3 | 458.3 |

| For diam. [mm] | Basic type | | | | Corrosion-resistant | | | |
|---|---|---|---|---|---|---|---|---|
| | CRC[1] | Weight [g] | Part no. | Type[2] | CRC[1] | Weight [g] | Part no. | Type[2] |
| 40 | 1 | 291 | **174377** | **FNC-40** | 4 | 291 | **161847** | **CRFNG-40** |
| 63 | 1 | 679 | **174379** | **FNC-63** | 4 | 680 | **161849** | **CRFNG-63** |
| 100 | 1 | 2041 | **174381** | **FNC-100** | 4 | 2054 | **161851** | **CRFNG-100** |

1) Corrosion resistance class CRC 1 to Festo standard FN 940070
Low corrosion stress. Dry internal application or transport and storage protection. Also applies to parts behind coverings, in the non-visible interior area, and parts which are covered in the application (e.g. drive trunnions).
Corrosion resistance class CRC 4 to Festo standard FN 940070
Particularly high corrosion stress. Outdoor exposure under extreme corrosive conditions. Parts exposed to aggressive media, e.g. in the chemical or food industries. Such applications may need to be safeguarded by special tests (➔ also FN 940082), using appropriate media.
2) Suitable for ATEX

# Accessories

**Flange mounting FNG**
for DFLG

Suitable for
emergency stop applications/
dynamic braking

Material:
Painted spheroidal graphite cast iron
Free of copper and PTFE
RoHS-compliant

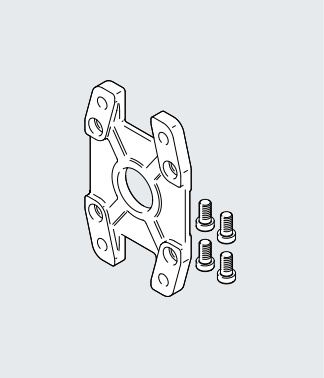

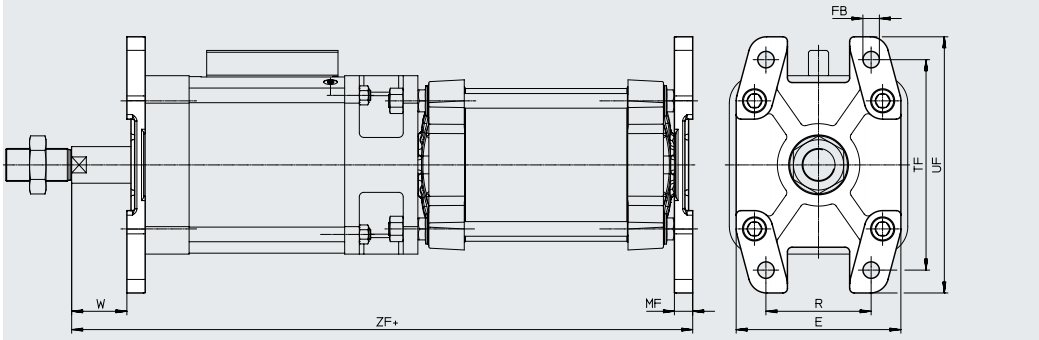


+ = plus stroke length

**Dimensions and ordering data**

| For diam. [mm] | E | FB ⌀ H13 | MF | R | TF | UF | W | ZF | CRC[1] | Weight [g] | Part no. | Type[2] |
|---|---|---|---|---|---|---|---|---|---|---|---|---|
| 160 | 180 | 18 | 20 | 115 | 230 | 280 | 60 | 578 | 1 | 3550 | **34478** | **FNG-160** |

1) Corrosion resistance class CRC 1 to Festo standard FN 940070
Low corrosion stress. Dry internal application or transport and storage protection. Also applies to parts behind coverings, in the non-visible interior area, and parts which are covered in the application (e.g. drive trunnions).
2) Suitable for ATEX

# Accessories

**Swivel flange SNC**
for DFLC

Material:
Die-cast aluminium
Free of copper and PTFE
RoHS-compliant

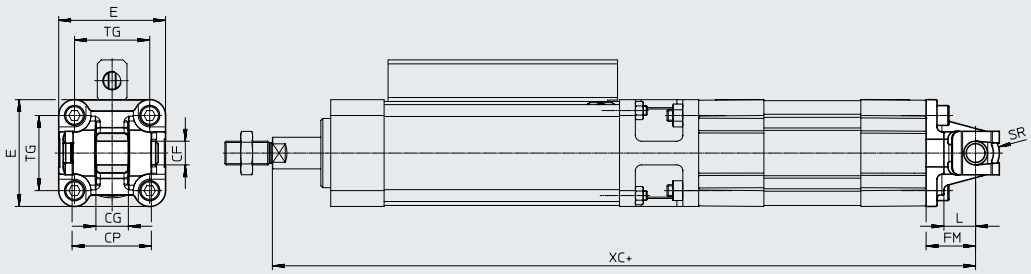


+ = plus stroke length

**Dimensions and ordering data**

| For diam. [mm] | CF ø E7/h9 | CG H14 | CP h14 | E | FM ±0.2 | L | SR |
|---|---|---|---|---|---|---|---|
| 40 | 12 | 16 | 40 | $54_{-0.5}$ | 25 | 16 | 12 |
| 63 | 16 | 21 | 51 | $75_{-0.6}$ | 32 | 21 | 16 |
| 100 | 20 | 25 | 75 | $110_{+0.3/-0.8}$ | 41 | 27 | 20 |

| For diam. [mm] | TG | XC | CRC[1)] | Weight [g] | Part no. | Type[2)] |
|---|---|---|---|---|---|---|
| 40 | 38 | 344.7 | 1 | 140 | **174384** | **SNC-40** |
| 63 | 56.5 | 398.9 | 1 | 331 | **174386** | **SNC-63** |
| 100 | 89 | 483.3 | 1 | 865 | **174388** | **SNC-100** |

1) Corrosion resistance class CRC 1 to Festo standard FN 940070
Low corrosion stress. Dry internal application or transport and storage protection. Also applies to parts behind coverings, in the non-visible interior area, and parts which are covered in the application (e.g. drive trunnions).
2) Suitable for ATEX

# Accessories

**Swivel flange**
**SNCS/SNCS-...-R3**
for DFLC

Material:
SNCS 40: die-cast aluminium
SNCS 63 ... 100:
Wrought aluminium alloy
SNCS-...-R3 100:
Wrought aluminium alloy with protective coating
RoHS-compliant

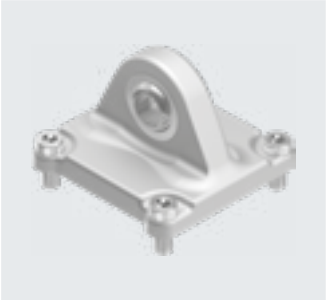

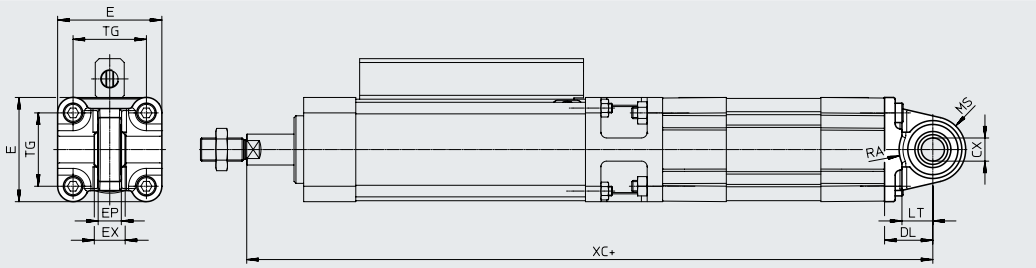


+ = plus stroke length

**Dimensions and ordering data**

| For diam. [mm] | CX | | | DL ±0.2 | E | | | EP ±0.2 |
|---|---|---|---|---|---|---|---|---|
| | | [CRSNCS] | [SNCS-...-R3] | | | [CRSNCS] | [SNCS-...-R3] | |
| 40 | $12_{+0.015}$ | $12_{+0.018/-0.04}$ | – | 25 | $54_{-0.5}$ | $54_{-0.5}$ | – | 12 |
| 63 | $16_{+0.015}$ | $16_{+0.018/-0.14}$ | – | 32 | $74.5_{\pm0.5}$ | $75_{-0.6}$ | – | 15 |
| 100 | $20_{+0.018}$ | – | $20_{+0.021/-0.04}$ | 41 | $109_{+1/-0.7}$ | – | $109_{+1/-0.7}$ | 18 |

**Dimensions and ordering data**

| For diam. [mm] | EX | LT | MS | | | RA | | | TG | XC |
|---|---|---|---|---|---|---|---|---|---|---|
| | | | | [CRSNCS] | [SNCS-...-R3] | +1 | [CRSNCS] +1 | [SNCS-...-R3] +1 | | |
| 40 | 16 | 16 | $17_{+0.5}$ | $17_{+0.5}$ | – | 17.5 | 17.5 | – | 38 | 344.7 |
| 63 | 21 | 21 | $23_{-0.5}$ | $22_{+0.5}$ | – | 23 | 23 | – | 56.5 | 398.9 |
| 100 | 25 | 27 | $30_{\pm0.5}$ | – | $30_{\pm0.5}$ | 95 | – | 100 | 89 | 483.3 |

| For diam. [mm] | Basic type | | | | High corrosion protection | | | |
|---|---|---|---|---|---|---|---|---|
| | CRC[1)] | Weight [g] | Part no. | Type | CRC[1)] | Weight [g] | Part no. | Type |
| 40 | 1 | 122 | **174398** | **SNCS-40** | 4 | 239 | **2895921** | **CRSNCS-40** |
| 63 | 2 | 281 | **174400** | **SNCS-63** | 4 | 576 | **2895923** | **CRSNCS-63** |
| 100 | 2 | 683 | **174402** | **SNCS-100** | 3 | 684 | **2895925** | **SNCS-100-R3** |

1) Corrosion resistance class CRC 1 to Festo standard FN 940070
Low corrosion stress. Dry internal application or transport and storage protection. Also applies to parts behind coverings, in the non-visible interior area, and parts which are covered in the application (e.g. drive trunnions).
Corrosion resistance class CRC 2 to Festo standard FN 940070
Moderate corrosion stress. Indoor applications in which condensation can occur. External visible parts with primarily decorative surface requirements which are in direct contact with a normal industrial environment.
Corrosion resistance class CRC 3 to Festo standard FN 940070
High corrosion stress. Outdoor exposure under moderate corrosive conditions. Externally visible parts with primarily functional surface requirements which are in direct contact with a normal industrial environment.
Corrosion resistance class CRC 4 to Festo standard FN 940070
Particularly high corrosion stress. Outdoor exposure under extreme corrosive conditions. Parts exposed to aggressive media, e.g. in the chemical or food industries. Such applications may need to be safeguarded by special tests (→ also FN 940082), using appropriate media.

# Accessories

**Swivel flange SNCL**
for DFLC

Material:
Die-cast aluminium
Free of copper and PTFE
RoHS-compliant

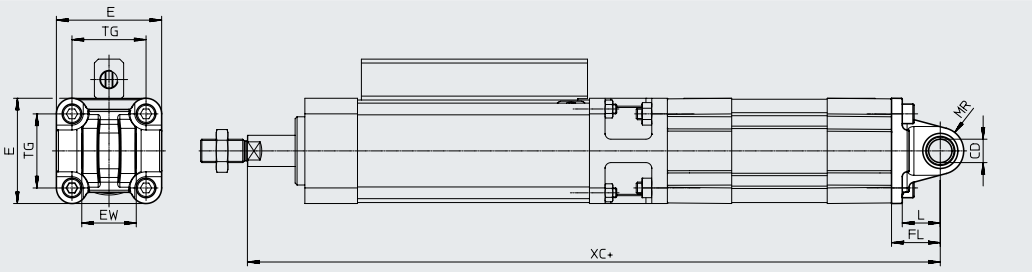


+ = plus stroke length

**Dimensions and ordering data**

| For diam. [mm] | CD ⌀ H10 | E | EW -0.2 -0.6 | FL ±0.2 | L | MR |
|---|---|---|---|---|---|---|
| 40 | 12 | $54_{-0.5}$ | 28 | 25 | 16 | 12 |
| 63 | 16 | $75_{-0.6}$ | 40 | 32 | 21 | 16 |
| 100 | 60 | 41 | 27 | 20 | 89 | 483.3 |

| For diam. [mm] | TG | XC | CRC[1] | Weight [g] | Part no. | Type |
|---|---|---|---|---|---|---|
| 40 | 38 | 344.7 | 1 | 95 | **174405** | **SNCL-40** |
| 63 | 56.5 | 398.9 | 1 | 225 | **174407** | **SNCL-63** |
| 100 | 89 | 483.3 | 1 | 606 | **174409** | **SNCL-100** |

1) Corrosion resistance class CRC 1 to Festo standard FN 940070
Low corrosion stress. Dry internal application or transport and storage protection. Also applies to parts behind coverings, in the non-visible interior area, and parts which are covered in the application (e.g. drive trunnions).

# Accessories

**Swivel flange**
**SNCB/SNCB-...-R3**
for DFLC

Material:
SNCB: die-cast aluminium
SNCB-...-R3: die-cast aluminium with protective coating
Free of copper and PTFE
RoHS-compliant

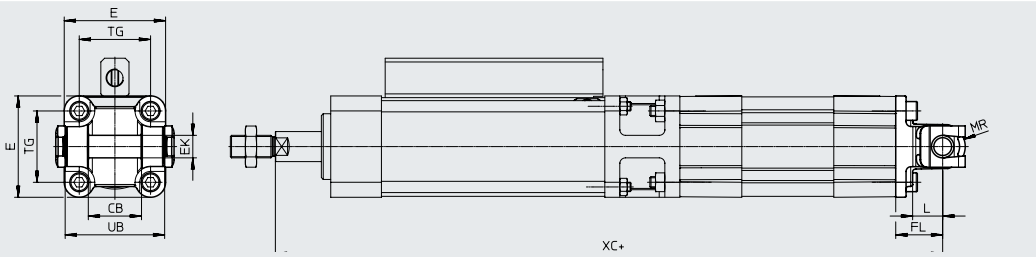


+ = plus stroke length

**Dimensions and ordering data**

| For diam. [mm] | CB H14 | E | EK ⌀ H10/e8 | FL ±0.2 | L | MR −0.5 | TG | UB h14 | XC |
|---|---|---|---|---|---|---|---|---|---|
| 40 | 28 | $54_{-0.5}$ | 12 | 25 | 16 | 12 | 38 | 52 | 344.7 |
| 63 | 40 | $75_{-0.6}$ | 16 | 32 | 21 | 16 | 56.5 | 70 | 398.9 |
| 100 | 60 | $110_{+0.3/-0.8}$ | 20 | 41 | 27 | 20 | 89 | 110 | 483.3 |

| For diam. | Basic type | | | | R3 – High corrosion protection | | | |
|---|---|---|---|---|---|---|---|---|
| [mm] | CRC[1)] | Weight [g] | Part no. | Type | CRC[1)] | Weight [g] | Part no. | Type |
| 40 | 1 | 155 | **174391** | **SNCB-40** | 3 | 151 | **176945** | **SNCB-40-R3** |
| 63 | 1 | 375 | **174393** | **SNCB-63** | 3 | 371 | **176947** | **SNCB-63-R3** |
| 100 | 1 | 1035 | **174395** | **SNCB-100** | 3 | 986 | **176949** | **SNCB-100-R3** |

1) Corrosion resistance class CRC 1 to Festo standard FN 940070
Low corrosion stress. Dry internal application or transport and storage protection. Also applies to parts behind coverings, in the non-visible interior area, and parts which are covered in the application (e.g. drive trunnions).
Corrosion resistance class CRC 3 to Festo standard FN 940070
High corrosion stress. Outdoor exposure under moderate corrosive conditions. Externally visible parts with primarily functional surface requirements which are in direct contact with a normal industrial environment.

# Accessories

**Swivel flange SNG**
for DFLG

Material:
Die-cast aluminium
Free of copper and PTFE
RoHS-compliant

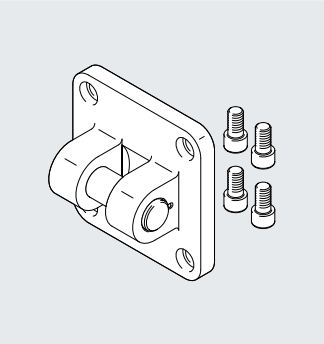

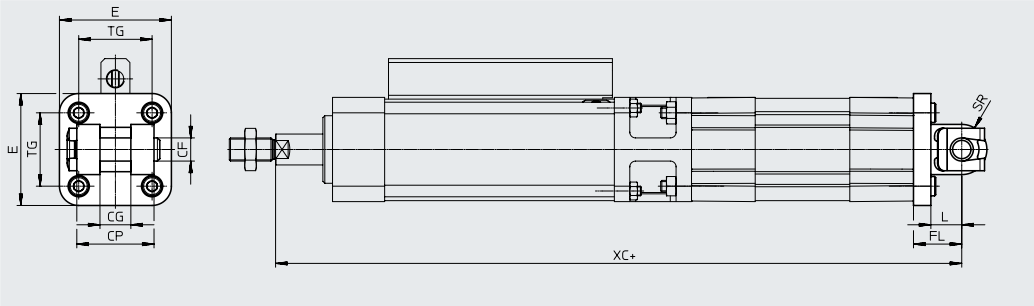


+ = plus stroke length

**Dimensions and ordering data**

| For diam. [mm] | CF F7/h9 | CG H14 | CP d12 | E max. | FL ±0.2 | L | SR max. | TG | XC | CRC[1] | Weight [g] | Part no. | Type |
|---|---|---|---|---|---|---|---|---|---|---|---|---|---|
| 160 | 35 | 43 | 122 | 186 | 55 | 35 | 32 | $140_{\pm 0.3}$ | 613 | 2 | 3577 | **152597** | **SNG-160** |

1) Corrosion resistance class CRC 2 to Festo standard FN 940070
Moderate corrosion stress. Indoor applications in which condensation can occur. External visible parts with primarily decorative surface requirements which are in direct contact with a normal industrial environment.

**Swivel flange SNGL**
for DFLG

Material:
Die-cast aluminium
Free of copper and PTFE

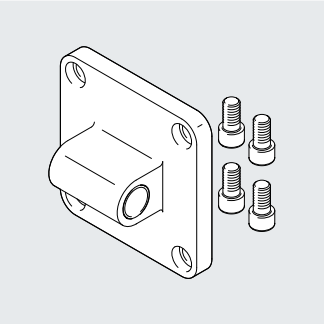

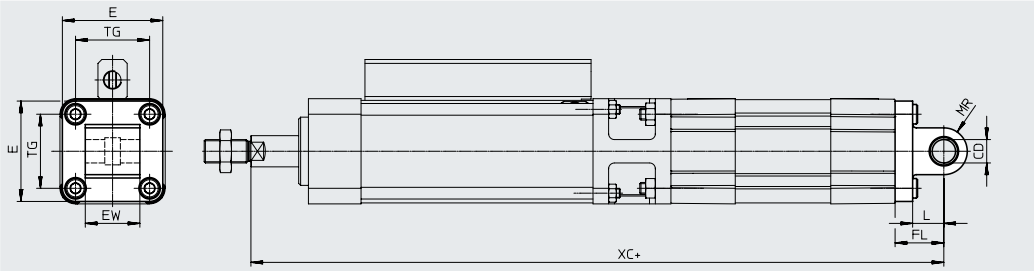


+ = plus stroke length

**Dimensions and ordering data**

| For diam. [mm] | CD ø H9 | EW | E ±0.5 | FL ±0.2 | L | MR | TG | XC | CRC[1] | Weight [g] | Part no. | Type |
|---|---|---|---|---|---|---|---|---|---|---|---|---|
| 160 | 30 | $90_{-0.5/-1.2}$ | 179.5 | 55 | 35 | 25 | 140 | 613 | 2 | 2358 | **151534** | **SNGL-160** |

1) Corrosion resistance class CRC 2 to Festo standard FN 940070
Moderate corrosion stress. Indoor applications in which condensation can occur. External visible parts with primarily decorative surface requirements which are in direct contact with a normal industrial environment.

# Accessories

**Swivel flange SNGB**
for DFLG

Material:
Die-cast aluminium
Free of copper and PTFE
RoHS-compliant

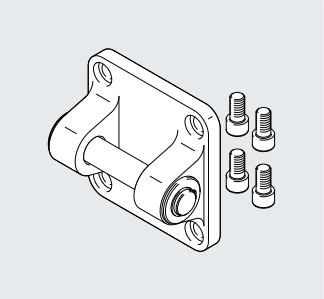

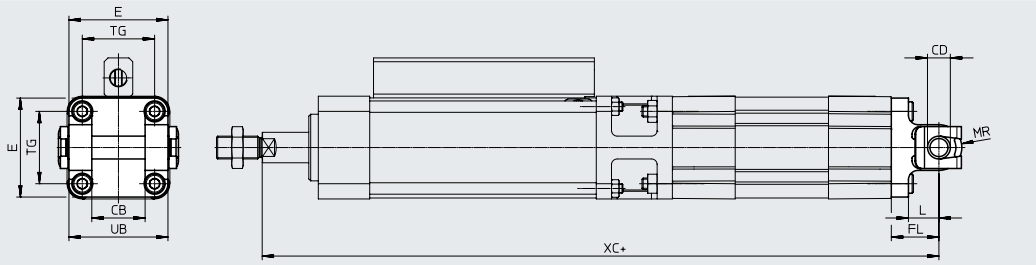


+ = plus stroke length

**Dimensions and ordering data**

| For diam. [mm] | CB H14 | CD ⌀ E10 | E ±0.5 | FL ±0.2 | L | MR | TG | UB h14 | XC | CRC[1] | Weight [g] | Part no. | Type |
|---|---|---|---|---|---|---|---|---|---|---|---|---|---|
| 160 | 90 | 30 | 179.5 | 55 | 35 | 25 | $140_{\pm 0.3}$ | 170 | 613 | 2 | 3445 | **34547** | **SNGB-160** |

1) Corrosion resistance class CRC 2 to Festo standard FN 940070
Moderate corrosion stress. Indoor applications in which condensation can occur. External visible parts with primarily decorative surface requirements which are in direct contact with a normal industrial environment.

# Accessories

**Ordering data – Mounting attachments**

Data sheets → Internet: clevis foot

| Designation | For diam. | Part no. | Type |
|---|---|---|---|
| Clevis foot LN/LNG | | | |
| 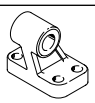 | 40 | **33891** | **LNG-40** |
| | 63 | **33893** | **LNG-63** |
| | 100 | **33895** | **LNG-100** |
| | 160 | **9037** | **LN-160** |
| Clevis foot LSNG | | | |
| 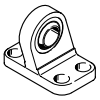 | 40 | **31741** | **LSNG-40** |
| | 63 | **31743** | **LSNG-63** |
| | 100 | **31745** | **LSNG-100** |
| | 160 | **152599** | **LSNG-160** |

| Designation | For diam. | Part no. | Type |
|---|---|---|---|
| Clevis foot LBG[1] for DFLC | | | |
| 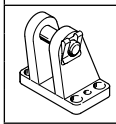 | 40 | **31762** | **LBG-40** |
| | 63 | **31764** | **LBG-63** |
| | 100 | **31766** | **LBG-100** |
| Clevis foot LSN | | | |
| 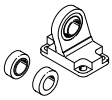 | 40 | **5562** | **LSN-40** |
| | 63 | **5564** | **LSN-63** |
| | 100 | **5566** | **LSN-100** |
| | 160 | **6988** | **LSN-160** |

1) Suitable for ATEX

**Ordering data – Mounting components, corrosion-resistant**

Data sheets → Internet: crlng

| Designation | For diam. | Part no. | Type |
|---|---|---|---|
| Clevis foot CRLNG for DFLC | | | |
| 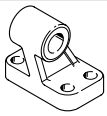 | 40 | **161841** | **CRLNG-40** |
| | 63 | **161843** | **CRLNG-63** |
| | 100 | **161845** | **CRLNG-100** |

**Ordering data – Mounting components, high corrosion protection**

Data sheets → Internet: lbg

| Designation | For diam. | Part no. | Type[1] |
|---|---|---|---|
| Clevis foot LBG-R3 for DFLC | | | |
| 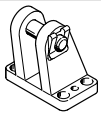 | 40 | **2078792** | **LBG-40-R3** |
| | 63 | **2078795** | **LBG-63-R3** |
| | 100 | **2078799** | **LBG-100-R3** |

1) Suitable for ATEX

# Accessories

**Ordering data – Piston rod attachments**

Data sheets → Internet: piston rod attachment

| Designation | For diam. | Part no. | Type |
|---|---|---|---|
| Rod eye SGS | | | |
| 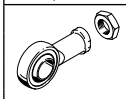 | 40 | **9262** | **SGS-M12x1.25** |
| | 63 | **9263** | **SGS-M16x1.5** |
| | 100 | **9264** | **SGS-M20x1.5** |
| | 160 | **10775** | **SGS-M36x2** |
| Rod clevis SG[1] | | | |
| 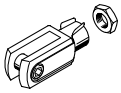 | 40 | **6145** | **SG-M12x1.25** |
| | 63 | **6146** | **SG-M16x1.5** |
| 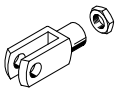 | 100 | **6147** | **SG-M20x1.5** |
| | 160 | **9581** | **SG-M36x2** |
| Coupling piece KSG[1] for DFLC | | | |
| 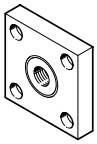 | 40 | **32964** | **KSG-M12x1.25** |
| | 63 | **32965** | **KSG-M16x1.5** |
| | 100 | **32966** | **KSG-M20x1.5** |

| Designation | For diam. | Part no. | Type |
|---|---|---|---|
| Rod clevis SGA[1] | | | |
| 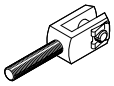 | 40 | **10767** | **SGA-M12x1.25** |
| | 63 | **10768** | **SGA-M16x1.5** |
| | 100 | **10769** | **SGA-M20x1.5** |
| | 160 | **10771** | **SGA-M36x2** |
| Self-aligning rod coupler FK[1] | | | |
| 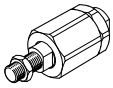 | 40 | **6141** | **FK-M12x1.25** |
| | 63 | **6142** | **FK-M16x1.5** |
| | 100 | **6143** | **FK-M20x1.5** |
| | 160 | **10746** | **FK-M36x2** |

1) Suitable for ATEX

**Ordering data – Piston-rod attachments, corrosion-resistant**

Data sheets → Internet: piston rod attachment

| Designation | For diam. | Part no. | Type |
|---|---|---|---|
| Rod eye CRSGS for DFLC | | | |
| 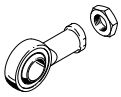 | 40 | **195583** | **CRSGS-M12x1.25** |
| | 63 | **195584** | **CRSGS-M16x1.5** |
| | 100 | **195585** | **CRSGS-M20x1.5** |
| Self-aligning rod coupler CRFK[1] for DFLC | | | |
| 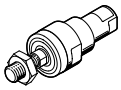 | 40 | **2305779** | **CRFK-M12x1.25** |
| | 63 | **2490673** | **CRFK-M16x1.5** |
| | 100 | **2545677** | **CRFK-M20x1.5** |

| Designation | For diam. | Part no. | Type |
|---|---|---|---|
| Rod clevis CRSG[1] for DFLC | | | |
| 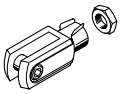 | 40 | **13570** | **CRSG-M12x1.25** |
| | 63 | **13571** | **CRSG-M16x1.5** |
| | 100 | **13572** | **CRSG-M20x1.5** |

1) Suitable for ATEX

# Accessories

## Proximity switches DADG

| General technical data | | | | |
|---|---|---|---|---|
| For diam. | | 40; 63 | 100 | 160 |
| Size | | M4 | | |
| Type of mounting | | Screwed on | | |
| Type of installation | | Flush | | |
| Housing material | | Steel | | |
| Cable sheath material | | TPE-U(PUR) | | |
| Note on materials | | Contains paint-wetting impairment substances | | |
| | | RoHS-compliant | | |
| Product weight | [g] | 26 | 30 | 32 |
| Conforms to standard | | EN 60947-5-2 | | |
| Certification | | RCM compliance mark | | |
| | | c UL us (OL) | | |
| CE marking (see declaration of conformity) | | To EU EMC Directive | | |
| Degree of protection | | IP67 | | |

| Operating and environmental conditions | | | | |
|---|---|---|---|---|
| For diam. | | 40; 63 | 100 | 160 |
| Switching output | | PNP | | |
| Switching element function | | N/O contact | | |
| Electrical connection 1, connection type | | Cable | | |
| Electrical connection 1, connection technology | | Open end | | |
| Electrical connection 1, number of pins/wires | | 3 | | |
| Cable length | [m] | 2 | | |
| Operating voltage range DC | [V] | 10 ... 30 | | |
| Max. switching frequency | | 5000 Hz | | |
| Max. switching frequency DC | | 5000 Hz | | |
| Max. output current | [mA] | 100 | | |
| No-load supply current | [mA] | ≤ 10 | | |
| Voltage drop | [V] | 2 | | |
| Residual ripple | [%] | 10 | | |
| Reverse polarity protection | | For all electrical connections | | |
| Short circuit current rating | | Pulsed | | |
| Rated operating distance | [mm] | 0.6 | | |
| Assured operating distance | [mm] | 0.64 | | |
| Reduction factors | | Aluminium = 0.55 | | |
| | | Stainless steel St 18/8 = 0.8 | | |
| | | Copper = 0.5 | | |
| | | Brass = 0.65 | | |
| | | Steel St 37 = 1.0 | | |
| Repetition accuracy | [mm] | 0.01 | | |
| Ambient temperature | [°C] | −25 ... +70 | | |

**Ordering data**

Data sheets → Internet: dadg

| | For diam. | Part no. | Type |
|---|---|---|---|
| 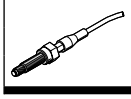 | 40; 63 | **8072857** | **DADG-D-F8-16/20** |
| | 100 | **8072858** | **DADG-D-F8-25** |
| | 160 | **8072859** | **DADG-D-F8-40** |

# Accessories

**Ordering data – Proximity switches for T-slot, magneto-resistive**

Data sheets → Internet: smt

| | Type of mounting | Switching output | Electrical connection | Cable length [m] | Part no. | Type |
|---|---|---|---|---|---|---|
| **N/O contact** | | | | | | |
| 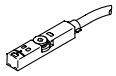 | Insertable in the slot from above, flush with cylinder profile, short design | PNP | Cable, 3-wire | 2.5 | **574335** | **SMT-8M-A-PS-24V-E-2.5-OE** |
| | | | Plug M8x1, 3-pin | 0.3 | **574334** | **SMT-8M-A-PS-24V-E-0.3-M8D** |
| | | NPN | Cable, 3-wire | 2.5 | **574338** | **SMT-8M-A-NS-24V-E-2.5-OE** |
| | | | Plug M8x1, 3-pin | 0.3 | **574339** | **SMT-8M-A-NS-24V-E-0.3-M8D** |
| **N/C contact** | | | | | | |
| 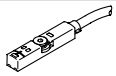 | Insertable in the slot from above, flush with cylinder profile, short design | PNP | Cable, 3-wire | 7.5 | **574340** | **SMT-8M-A-PO-24V-E-7.5-OE** |

**Ordering data – Proximity switches for T-slot, NAMUR**

Data sheets → Internet: sdbt

| | Type of mounting | Switching output | Electrical connection | Cable length [m] | Part no. | Type |
|---|---|---|---|---|---|---|
| **N/O contact** | | | | | | |
| 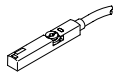 | Insertable in the slot from above, flush with cylinder profile | NAMUR | Cable, 2-wire | 5 | **579071** | **SDBT-MS-20NL-ZN-E-5-LE-EX6** |
| | | | | 10 | **579072** | **SDBT-MS-20NL-ZN-E-10-LE-EX6** |

**Ordering data – Connecting cables**

Data sheets → Internet: nebu

| | Electrical connection, left | Electrical connection, right | Cable length [m] | Part no. | Type |
|---|---|---|---|---|---|
|  | Straight socket, M8x1, 3-pin | Cable, open end, 3-wire | 2.5 | **541333** | **NEBU-M8G3-K-2.5-LE3** |
| | | | 5 | **541334** | **NEBU-M8G3-K-5-LE3** |
|  | Angled socket, M8x1, 4-pin | Cable, open end, 3-wire | 2.5 | **541338** | **NEBU-M8W3-K-2.5-LE3** |
| | | | 5 | **541341** | **NEBU-M8W3-K-5-LE3** |

# Accessories

## Position transmitter

The position transmitter continuously senses the position of the piston.
It has an analogue output with an output signal in proportion to the piston position.

**Ordering data – Position transmitter for T-slot**

Data sheets → Internet: sdat

| | Position measuring range | Analogue output [mA] | Type of mounting | Electrical connection | Cable length [m] | Part no. | Type |
|---|---|---|---|---|---|---|---|
| 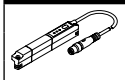 | 0 ... 50 | 4 ... 20 | Insertable in the slot from above | Plug M8x1, 4-pin, in-line | 0.3 | **1531265** | **SDAT-MHS-M50-1L-SA-E-0.3-M8** |
| | 0 ... 80 | | | | | **1531266** | **SDAT-MHS-M80-1L-SA-E-0.3-M8** |
| | 0 ... 100 | | | | | **1531267** | **SDAT-MHS-M100-1L-SA-E-0.3-M8** |
| | 0 ... 125 | | | | | **1531268** | **SDAT-MHS-M125-1L-SA-E-0.3-M8** |
| | 0 ... 160 | | | | | **1531269** | **SDAT-MHS-M160-1L-SA-E-0.3-M8** |

**Ordering data – Sensor bracket for proximity switch SMT-8M and position transmitter SMAT-8M**
for DFLG

Data sheets → Internet: dasp

| | For diam. | Materials | Part no. | Type |
|---|---|---|---|---|
| 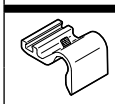 | 160 | Rail: anodised wrought aluminium alloy<br>Screws: high-alloy stainless steel | **1553813** | **DASP-M4-160-A** |

**Ordering data – Connecting cables**

Data sheets → Internet: nebu

| | Electrical connection, left | Electrical connection, right | Cable length [m] | Part no. | Type |
|---|---|---|---|---|---|
| 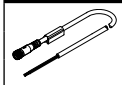 | Straight socket, M8x1, 4-pin | Cable, open end, 4-wire | 2.5 | **541342** | **NEBU-M8G4-K-2.5-LE4** |
| | | | 5 | **541343** | **NEBU-M8G4-K-5-LE4** |
| 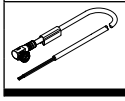 | Angled socket, M8x1, 4-pin | Cable, open end, 4-wire | 2.5 | **541344** | **NEBU-M8W4-K-2.5-LE4** |
| | | | 5 | **541345** | **NEBU-M8W4-K-5-LE4** |

**Ordering data – One-way flow control valves**

Data sheets → Internet: grla

| | Connection | | Material | Part no. | Type |
|---|---|---|---|---|---|
| | Thread | For tubing O.D. | | | |
| For exhaust air | | | | | |
| 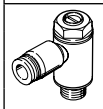 | G1/8 | 4 | Metal version | **193143** | **GRLA-1/8-QS-4-D** |
| | | 6 | | **193144** | **GRLA-1/8-QS-6-D** |
| | | 8 | | **193145** | **GRLA-1/8-QS-8-D** |
| | G1/4 | 6 | | **193146** | **GRLA-1/4-QS-6-D** |
| | | 8 | | **193147** | **GRLA-1/4-QS-8-D** |
| | | 10 | | **193148** | **GRLA-1/4QS-10-D** |
| | G3/8 | 6 | | **193149** | **GRLA-3/8-QS-6-D** |
| | | 8 | | **193150** | **GRLA-3/8-QS-8-D** |
| | | 10 | | **193151** | **GRLA-3/8-QS-10-D** |
| | G1/2 | 12 | | **193152** | **GRLA-1/2-QS-12-D** |