Multiple single solenoid valves

with manual override

Two 3/2-way valves in manifold design:

Type BMFH-2-3-M5

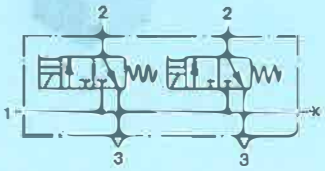

Three 3/2-way valves in manifold design:

Type BMFH-3-3-M5

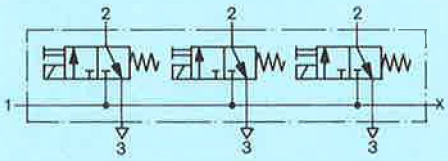

When the solenoid is energized, the valve is actuated and remains actuated until the solenoid is deenergized. The valve manifolds can be interconnected by means of manifold connector Type BX-M5.

The solenoid valve manifolds cannot be used with explosion-proof solenoid coils.

Accessories:
For sockets and accessories, see sheets 2.594 to 2.598.

Manifold connector:
Order code 4524 BX-M5

Type BMFH-2-3-M5 (dimensions in brackets)
BMFH-3-3-M5

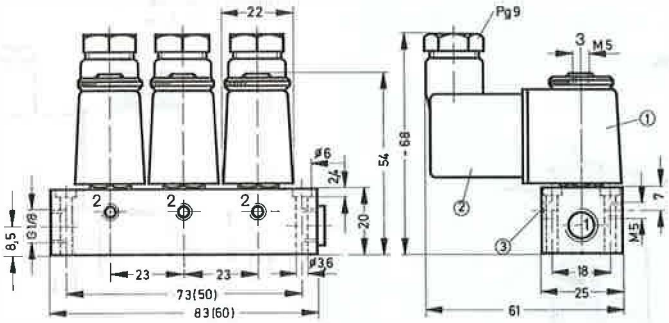

Permissible tightening torque for the securing nut of the solenoid coil = 150 Ncm (15 kpcm)

① Solenoid coil can be rotated
② Plug can be repositioned by 180°
③ Manual override

1 (P) = Supply port
2 (A) = Working or outlet line
3 (R) = Exhaust

Order code Part No./Type	with socket	4522 BMFH-2-3-M5 + voltage data	4523 BMFH-3-3-M5 + voltage data
	without socket	*Order example: 4522 BMFH-2-3-M5 + voltage data – OD*	
Medium		Compressed air, filtered (lubricated or unlubricated)	
Design		Poppet valve, directly actuated in one direction with return spring	
Mounting		Through-holes in housing	
Connection		P: G 1/8, A, R: M5	
Nominal size		1.3 mm	
Standard nominal flow rate (P → A)		50 l/min	
Pressure range		0 to 8 bar; 0 to 0,8 MPa	
Response time at 6 bar		On: 15 ms, Off: 22 ms – 5 to +40 °C	
Ambient temperature			
Medium temperature		–10 to +60 °C	
Materials		Housing: blue-anodized aluminium; seals: Perbunan	
Weight		0.245 kg	0.350 kg
DC	Standard voltages	12, 24 V	Solenoid coils, see sheets 2.591, 2.591.1
	Special voltages	12 to 220 V	
AC	Standard voltages	24, 42, 110, 220 V/50 Hz or 50 and 60 Hz	
	Special voltages	12 to 240 V/50 or 60 Hz	
Power consumption	DC	4.5 W	
	AC	Hold 6 VA, pull 7.5 VA	
Duty cycle		100%	
Degree of protection		IP 65 (DIN 40050)	