# Push-in fittings CRQS, stainless steel

# Key features

## Application

Choosing the right fitting is effortless. With a system that includes well over 1000 types of standard and function fittings, Festo offers the right solution for every connection.

## Summary of tubing/fitting combinations

| Applications | Fitting | Tubing | Description |
|---|---|---|---|
| Standard | QS | PEN | Suitable for a wide range of tasks and attractively priced. Flexible thanks to highly resistant materials, easy to install thanks to optimised bending radii. High level of abrasion resistance in dynamic applications. |
| | QS | PUN | Maximum flexibility in standard applications thanks to an extremely wide range of options for combining the different types. |
| | QS | PAN | Meets all requirements, even for standard applications with increased pressure and temperature ranges. |
| High pressures | NPQM | PAN-MF | Meets DIN standard 73378: ideal for use in mobile pneumatics. Suitable for increased temperature ranges combined with high pressure ranges. |
| | NPQH | PAN-R | Powerful in pressure ranges up to 20 bar, for example in applications with the pressure booster DPA. |
| | NPQR | PUN-H-SF | Use in areas with higher pressure ranges and humidity. Tubing PUN-H-SF is resistant to kinking and hydrolysis and is suitable for water applications. |
| Resistant to chemicals and hydrolysis | NPQP | PLN | Resistant to cleaning agents, FDA-compliant and economical. Can be used instead of the combination with stainless steel fittings. |
| | NPKA | PUN-H | Hydrolysis-resistant and suitable for water applications. Combination suitable for use in cleanrooms, FDA-compliant and corrosion-resistant because it's 100% polymer. Very easy to install with the "one-click principle". |
| | NPQR | PFAN/PTFEN | Optimised design, fewer edges where dirt can collect – all at an attractive price. For high temperatures up to 150 °C. Pressure range up to 16 bar. Maximum corrosion resistance (CRC 4). |
| | NPCK | PFAN/PTFEN | Easy to clean thanks to the union nut's edge-free design. Maximum corrosion resistance (CRC 4) and FDA-compliant. Suitable for a wide range of media. |
| | CRQS | PFAN/PTFEN | Maximum corrosion resistance (CRC 4) and maximum resistance to aggressive acids and alkalis. |
| Resistant to chemicals and hydrolysis, food-safe | NPQR | PUN-H-F/PFAN | Food-safe to Regulation (EC) No. 1935/2004 and FDA-listed materials. Can be used in the food and packaging industry in combination with PUN-H-F and PFAN. |
| | NPQH | PFAN/PTFEN | For high temperatures up to 150 °C. Food-safe to Regulation (EC) No. 1935/2004, FDA-listed materials and resistant to cleaning agents. |
| Antistatic | NPQM | PUN-CM | Anti-static tubing plus solid metal fitting: maximum protection for electrical and electronic components. |
| Flame-retardant | NPQM | PUN-V0 | Very safe in areas where there is a risk of fire thanks to flame-retardant properties. The tubing has been tested to DIN 5510-2. |
| Resistant to welding spatter | NPQH | PUN-V0-C | Ideal for applications involving welding spatter. Reliable thanks to a tubing wall thickness of 2 mm for all diameters. |
| | QS-V0 | PAN-V0 | Safe even in the immediate vicinity of welding spatter thanks to double-walled tubing with special fitting. |
| Battery production | NPQE-F1A[1)] | PUN-H | Suitable in battery production areas. |

1) F1A = Free of copper, zinc and nickel

# Key features

**Push-in fittings – Product range**

QSM, mini series — Datasheets ➔ Internet: qsm

Compact push-in fittings for maximum component density in confined spaces. For pneumatic applications with a temperature range up to 80 °C and a pressure range up to 14 bar.
Tubing O.D. of 2, 3, 4 and 6 mm with connecting threads M3, M5, M6, M7, R1/8 and G1/8.

QS, standard series — Datasheets ➔ Internet: qs

Wide selection of push-in fittings for pneumatic applications with a temperature range up to 80 °C and a pressure range up to 14 bar.
Tubing O.D. of 4, 6, 8, 10, 12, 16 and 22 mm with connecting thread R1/8 ... R1/2 and G1/8 ... G3/4.

CRQS, stainless steel — Datasheets ➔ Internet: crqs

Stainless steel push-in fitting. Maximum corrosion resistance CRC4 and chemical resistance with approval for use in the food and packaging industry. For pneumatic applications with a temperature range up to 120 °C and a pressure range up to 10 bar.
Tubing O.D. of 4, 6, 8, 10, 12 and 16 mm with connecting thread M5 and R1/8 ... R1/2.

QS-V0, resistant to welding spatter — Datasheets ➔ Internet: qs-v0

Flame-retardant push-in fitting for use in all areas where there is a risk of fire, for example welding systems in the automotive industry, and in the construction industry. For pneumatic applications with a temperature range up to 60 °C and a pressure range up to 10 bar.
Tubing O.D. of 4, 6, 8, 10 and 12 mm with connecting thread R1/8 ... R1/2 and G1/8 ... G1/2.

NPQH — Datasheets ➔ Internet: npqh

All metal push-in fitting made of chemically nickel-plated brass. High corrosion resistance CRC3 and chemical resistance. For pneumatic applications with a temperature range up to 150 °C and a pressure range up to 20 bar.
Tubing O.D. of 4, 6, 8, 10, 12 and 14 mm with connecting thread M5, M7 and G1/8 ... G1/2.

NPQM — Datasheets ➔ Internet: npqm

Attractively priced metal push-in fitting for pneumatic applications with a temperature range up to 70 °C and a pressure range up to 16 bar.
Tubing O.D. of 3, 4, 6, 8, 10, 12 and 14 mm with connecting thread M5, M7 and G1/8... G1/2.

NPQP — Datasheets ➔ Internet: npqp

Polypropylene fitting for use in applications with extreme media influences. For pneumatic applications with a temperature range up to 60 °C and a pressure range up to 10 bar.
Tubing O.D. of 4, 6, 8, 10 and 12 mm with connecting thread R1/8 ... R1/2.

NPQR, stainless steel — Datasheets ➔ Internet: npqr

Stainless steel push-in fitting. Maximum corrosion resistance CRC4 and chemical resistance. For pneumatic applications with a temperature range up to 150 °C and a pressure range up to 16 bar.
Tubing O.D. of 4, 6, 8, 10 and 12 mm with connecting thread M5, M7 and G1/8 ... G1/2.

# Key features

**Functional push-in fittings – Product range**

QSK, Datasheets ➔ Internet: qsk
push-in fitting, self-sealing

Push-in fitting that blocks the air flow after the tubing is disconnected. For pneumatic applications with a temperature range up to 60 °C and a pressure range up to 14 bar.
Tubing O.D. of 4, 6, 8, 10 and 12 mm with connecting thread M5, R1/8 ... R1/2 and G1/8 ... G1/2.

QSR, Datasheets ➔ Internet: qsr
push-in fitting, rotatable

Push-in fitting with swivel joint, rotatable by 360°. The ball bearing enables rotating movements in the application up to max. 500 rpm. For pneumatic applications with a temperature range up to 60 °C and a pressure range up to 14 bar.
Tubing O.D. of 4, 6, 8, 10 and 12 mm with connecting thread M5, R1/8 ... R1/2 and G1/8 ... G1/2.

**Quick connectors – Product range**

NPCK Datasheets ➔ Internet: npck

Stainless steel fitting for use in areas subject to intensive cleaning. Maximum corrosion resistance CRC4. For pneumatic applications with a temperature range up to 120 °C and a pressure range up to 12 bar.
Tubing O.D. 4, 6, 8 and 10 mm with connecting thread M5 and G1/8 ... G3/8.

**Click fittings – Product range**

NPKA Datasheets ➔ Internet: npka

Polymer fitting for easy installation with one hand. Hydrolysis-resistant, FDA-compliant and easy to clean. For pneumatic applications with a temperature range up to 60 °C and a pressure range up to 10 bar.
Tubing O.D. of 6 mm with connecting thread G1/8.

# Key features

## CRQS, the stainless steel fitting

**Highest process reliability in every case**
Maximum corrosion resistance and resilience:
The CRQS remains tightly sealed, even under the most demanding requirements in terms of temperature, pressure and resistance.

**Unlimited use in the food industry**
The push-in fitting CRQS can be used in combination with the food-safe plastic tubing PFAN in all areas of the food & packaging industry, e.g. in areas where the use of stainless steel is stipulated. Used together, they easily resist all cleaning agents and lubricants.

## Simply "plug and work"

The stainless steel retaining claw holds the tubing securely without damaging its surface.
Vibration and pressure surges are absorbed.

## Reliably connected

A fluoro elastomer sealing ring guarantees a perfect seal between the standard tubing and the body of the fitting.
The standard tubing combined with the Festo push-in connector is suitable for compressed air and vacuum.

## Rotatable

It can be rotated once it has been fitted.

## Mounting/dismounting the tubing

### Mounting

The prerequisite for ensuring that the inner seal [3] is securely held and protected against damage is that the tube is cut into straight lengths and deburred.

1) Pull out releasing ring [1].
2) Insert tubing as far as the stop [2].
   It is important to ensure that the tubing is inserted into the inner seal [3]. Depending on the tolerance between the tubing and the seal, the contact of the tubing with the seal may be incorrectly interpreted as the stop.
3) Check that the tubing connection is secure by pulling gently on the tube.

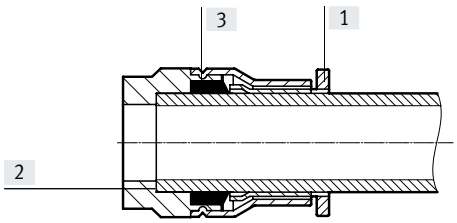


### Dismounting

1) The tubing can be detached easily by pressing and holding down the releasing ring [1]. Carefully remove the tubing from the fitting.
2) Before re-using the tubing, remove the damaged part by cutting it off.

# Key features

**Which fitting fits which thread?**

**Metric thread**

- Shorter thread
- Constant installation depth
- Replaceable sealing ring
- Sealing at the front
- Can be re-used a number of times thanks to replaceable sealing ring.
- Sealing is guaranteed as the O-ring sits in a groove that seals against the tube.

**R thread to EN 10226-1 and ISO 7/1**

- Self-sealing thread
- No additional sealing surface required
- Smaller installation dimensions since there is no need for an offset for the sealing surface
- Can be reused up to 5 times.

**Note**

A suitable sealing agent is required to seal the push-in fitting CRQS with R-thread.

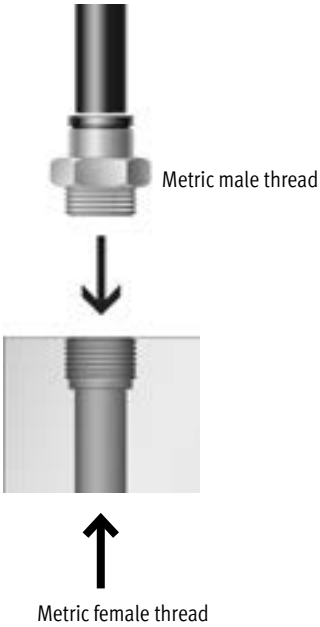


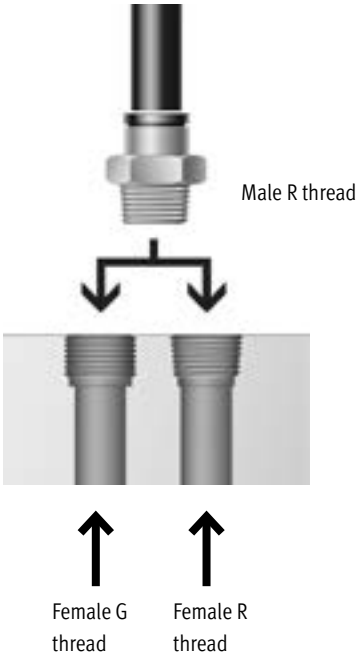

# Technical data

| General technical data | |
|---|---|
| Size | Standard |
| Design | Push-pull principle |
| Mounting position | Any |
| Type of seal on screwed trunnion | Sealing ring (metric thread only) |
| Usable lines | PFAN |

| Operating and environmental conditions | | |
|---|---|---|
| Operating pressure for full temperature range | [MPa] | –0.095 ... +1 |
| | [bar] | –0.95 ... +10 |
| | [psi] | –13.775 ... +145 |
| Note on operating pressure | | Water: max. 0.6 MPa at max. 50°C |
| Operating medium | | Compressed air to ISO 8573-1:2010 [7:-:-]<br>Water (liquid, ice-free) |
| Note on the operating/ pilot medium | | Lubricated operation possible |
| Ambient temperature | [°C] | –15 ... +120 |
| Corrosion resistance class CRC[1] | | 4 - Particularly high corrosion stress |
| Food-safe | | See supplementary material information[2] |

1) More information www.festo.com/x/topic/crc
2) More information: www.festo.com/catalogue/crqs → Support/Downloads.

## Materials

Sectional view

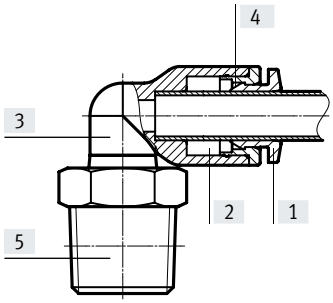


| Push-in fitting CRQS | | |
|---|---|---|
| [1] | Releasing ring | High-alloy stainless steel |
| [2] | Tubing seal | FPM |
| [3] | Housing | High-alloy stainless steel |
| [4] | Tube clamping segment | High-alloy stainless steel |
| [5] | Threaded coupling | High-alloy stainless steel |
| – | Thrust ring | High-alloy stainless steel |
| – | Screwed trunnion<br>(push-in fittings only) | High-alloy stainless steel |
| – | Thread seal<br>(push-in fittings M5 only) | FPM<br>High-alloy stainless steel |
| – | Nut<br>(push-in bulkhead connector CRQSS only) | High-alloy stainless steel |
| Note on materials | | RoHS-compliant |
| LABS (PWIS) conformity | | VDMA24364-B1/B2-L |

# Technical data

## Tubing insertion depth

| Tubing O.D. [mm] | | 4 | 6 | 8 | 10 | 12 | 16 |
|---|---|---|---|---|---|---|---|
| Tubing insertion depth | [mm] | 18 | 19.5 | 21.5 | 25.5 | 27 | 32 |

## Recommended tightening torque

When using push-in fittings with internal hex, ensure that the Allen key is not inserted too far into the fitting when tightening it, to prevent the risk of damage to components behind the fitting.

| Connecting thread | Nominal tightening torque [Nm] |
|---|---|
| **M thread** | |
| M5 | 1.33 ±20% |

**Note**

A suitable sealing material is required to seal the R-thread. This coating replaces the conventional sealing ring.
Simply screw in the R thread by hand and tighten it by turning it 1 or 2 times using an open-ended spanner. The fitting can be reinstalled up to five times. When screwing in R threads several times, you must make sure that the abraded particles from the sealing material coating cannot enter the compressed air system.

**Possible push-in fitting/tubing combinations**

| Thread | Tubing O.D. [mm] | | | | | |
|---|---|---|---|---|---|---|
| | 4 | 6 | 8 | 10 | 12 | 16 |
| M5 | ++ | + | – | – | – | – |
| R1/8 | + | ++ | + | – | – | – |
| R1/4 | – | + | ++ | + | – | – |
| R3/8 | – | – | – | ++ | + | – |
| R1/2 | – | – | – | – | ++ | + |

\+ Possible thread/tubing O.D. combinations
++ Optimum thread/tubing O.D. combination (for the flow rate)

# Product range overview

| Design | Version | Type | Connection D1 | | | Connection D2 | → Page |
|---|---|---|---|---|---|---|---|
| | | | M thread | R thread | Tubing O.D. | Tubing O.D. | |
| **Straight shape** | **Push-in fitting - Male thread with internal/external hex** | | | | | | |
| |  | **CRQS** | M5x0.8 | – | – | 4, 6 | 11 |
| | | | – | R1/8 | | 4, 6, 8 | |
| | | | | R1/4 | | 6, 8, 10 | |
| | | | | R3/8 | | 10, 12 | |
| | | | | R1/2 | | 12, 16 | |
| | **Push-in connector** | | | | | | |
| |  | **CRQS** | – | – | 4 | 4 | 13 |
| | | | | | 6 | 6 | |
| | | | | | 8 | 8 | |
| | | | | | 10 | 10 | |
| | | | | | 12 | 12 | |
| | | | | | 16 | 16 | |
| | 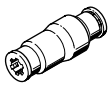 | **CRQS** Reducing | – | – | 6 | 4 | 13 |
| | | | | | 8 | 6 | |
| | | | | | 10 | 8 | |
| | | | | | 12 | 10 | |
| | | | | | 16 | 12 | |
| **Bulkhead** | **Push-in bulkhead connector** | | | | | | |
| |  | **CRQSS** | – | – | 4 | 4 | 13 |
| | | | | | 6 | 6 | |
| | | | | | 8 | 8 | |
| | | | | | 10 | 10 | |
| | | | | | 12 | 12 | |
| | | | | | 16 | 16 | |
| **L-shape** | **Push-in L-fitting, rotatable – Male thread with external hex** | | | | | | |
| | 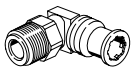 | **CRQSL** | M5x0.8 | – | – | 4, 6 | 14 |
| | | | – | R1/8 | | 4, 6, 8 | |
| | | | | R1/4 | | 6, 8, 10 | |
| | | | | R3/8 | | 10, 12 | |
| | | | | R1/2 | | 12, 16 | |
| | **Push-in L-connector** | | | | | | |
| |  | **CRQSL** | – | – | 4 | – | 15 |
| | | | | | 6 | | |
| | | | | | 8 | | |
| | | | | | 10 | | |
| | | | | | 12 | | |
| | | | | | 16 | | |

# Product range overview

| Design | Version | Type | Connection D1 | | | Connection D2 | → Page |
|---|---|---|---|---|---|---|---|
| | | | M thread | R thread | Tubing O.D. | Tubing O.D. | |
| T-shape | Push-in T-fitting, rotatable – Male thread with external hex | | | | | | |
| | 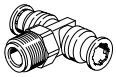 | CRQST | M5x0.8 | – | – | 4, 6 | 16 |
| | | | – | R1/8 | | 6, 8 | |
| | | | | R1/4 | | 8, 10 | |
| | | | | R3/8 | | 10, 12 | |
| | | | | R1/2 | | 12, 16 | |
| | Push-in T-connector | | | | | | |
| |  | CRQST | – | – | 4 | – | 17 |
| | | | | | 6 | | |
| | | | | | 8 | | |
| | | | | | 10 | | |
| | | | | | 12 | | |
| | | | | | 16 | | |
| Y-shape | Push-in Y-connector | | | | | | |
| |  | CRQSY | – | – | 4 | – | 17 |
| | | | | | 6 | | |
| | | | | | 8 | | |
| | | | | | 10 | | |
| | | | | | 12 | | |
| | | | | | 16 | | |

# Datasheet

**Push-in fitting CRQS**
Male thread with external hex

Design:
Straight shape

M thread

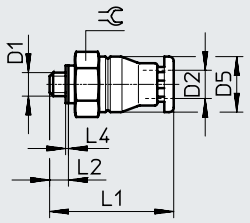


R thread

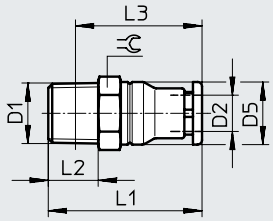


**Dimensions and ordering data**

| Pneumatic connection | | Nominal width | Dimensions [mm] | | | | | | Weight/ piece | Part no. | Type | PU[1] |
|---|---|---|---|---|---|---|---|---|---|---|---|---|
| Male thread<br>D1 | For tubing O.D.<br>D2 | [mm] | D5<br>ø | L1 | L2 | L3 | L4 | ⌀ | [g] | | | |
| **Metric thread with sealing ring** | | | | | | | | | | | | |
| M5x0.8 | 4 | 2 | 9.8 | 24.4 | 3 | – | 0.5 | 10 | 6 | **162860** | **CRQS-M5-4** | **1** |
| | 6 | 2 | 11.8 | 25.6 | 3 | – | 0.5 | 12 | 8.4 | **162861** | **CRQS-M5-6** | **1** |
| **R thread** | | | | | | | | | | | | |
| R1/8 | 4 | 2.5 | 9.8 | 27.4 | 8 | 23.4 | – | 10 | 8.7 | **132643** | **CRQS-1/8-4** | **1** |
| | 6 | 4.1 | 11.8 | 27.6 | 8 | 23.7 | – | 12 | 9.9 | **162862** | **CRQS-1/8-6** | **1** |
| | 8 | 5.1 | 13.8 | 30.9 | 8 | 27 | – | 14 | 12 | **162863** | **CRQS-1/8-8** | **1** |
| R1/4 | 6 | 4.2 | 11.8 | 31.6 | 11 | 25.6 | – | 14 | 18 | **132644** | **CRQS-1/4-6** | **1** |
| | 8 | 5.8 | 13.8 | 33.9 | 11 | 27.9 | – | 14 | 18 | **162864** | **CRQS-1/4-8** | **1** |
| | 10 | 5.9 | 16.8 | 36 | 11 | 30 | – | 17 | 22 | **162865** | **CRQS-1/4-10** | **1** |
| R3/8 | 10 | 6 | 16.8 | 38 | 12 | 31.7 | – | 17 | 29 | **162866** | **CRQS-3/8-10** | **1** |
| | 12 | 7.6 | 19.8 | 39.9 | 12 | 33.6 | – | 21 | 37 | **162867** | **CRQS-3/8-12** | **1** |
| R1/2 | 12 | 8.1 | 19.8 | 42.9 | 15 | 34.7 | – | 22 | 55 | **162868** | **CRQS-1/2-12** | **1** |
| | 16 | 10.1 | 23.7 | 49.7 | 15 | 41.6 | – | 24 | 59 | **162869** | **CRQS-1/2-16** | **1** |

1) Packaging unit.

# Datasheet

**Push-in fitting CRQS-...-I**
Male thread with internal hex

Design:
Straight shape

M thread

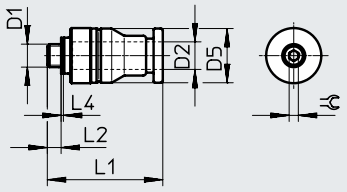


R thread

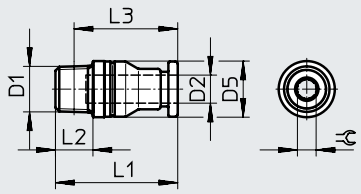


| **Dimensions and ordering data** | | | | | | | | | | | | |
|---|---|---|---|---|---|---|---|---|---|---|---|---|
| Pneumatic connection | | Nominal width | Dimensions [mm] | | | | | | Weight/ piece | Part no. | Type | PU[1] |
| Male thread<br>D1 | For tubing O.D.<br>D2 | [mm] | D5<br>ø | L1 | L2 | L3 | L4 | ⬡ | [g] | | | |
| **Metric thread with sealing ring** | | | | | | | | | | | | |
| M5 | 4 | 2 | 10 | 22.9 | 3 | – | 0.5 | 2 | 5 | **132328** | **CRQS-M5-4-I** | **1** |
| | 6 | 2 | 12 | 25.1 | 3 | – | 0.5 | 2 | 7.7 | **132329** | **CRQS-M5-6-I** | **1** |
| **R thread** | | | | | | | | | | | | |
| R1/8 | 6 | 4.1 | 12 | 26.1 | 8 | 22.2 | – | 4 | 8.4 | **132330** | **CRQS-1/8-6-I** | **1** |
| | 8 | 5.1 | 14 | 30.4 | 8 | 26.5 | – | 5 | 12 | **132331** | **CRQS-1/8-8-I** | **1** |
| R1/4 | 8 | 5.8 | 14 | 31.4 | 11 | 25.4 | – | 6 | 15 | **132332** | **CRQS-1/4-8-I** | **1** |
| | 10 | 5.9 | 17 | 36 | 11 | 30 | – | 6 | 21 | **132333** | **CRQS-1/4-10-I** | **1** |
| R3/8 | 10 | 6 | 17 | 34 | 12 | 27.7 | – | 6 | 24 | **132334** | **CRQS-3/8-10-I** | **1** |
| | 12 | 7.6 | 20 | 36.4 | 12 | 30.1 | – | 8 | 28 | **132335** | **CRQS-3/8-12-I** | **1** |
| R1/2 | 12 | 8.1 | 22 | 39.4 | 15 | 31.2 | – | 8 | 45 | **132336** | **CRQS-1/2-12-I** | **1** |
| | 16 | 10.1 | 24 | 46.7 | 15 | 38.6 | – | 12 | 47 | **132337** | **CRQS-1/2-16-I** | **1** |

1) Packaging unit.

# Datasheet

**Push-in connector CRQS**

Design:
Straight shape

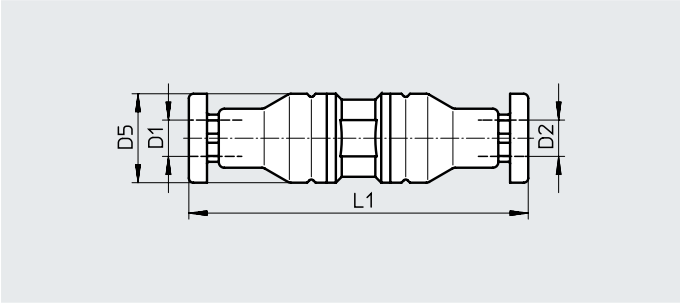


| Dimensions and ordering data | | | | | | | | |
|---|---|---|---|---|---|---|---|---|
| Pneumatic connection | | Nominal width | Dimensions [mm] | | Weight/ piece | Part no. | Type | PU[1] |
| For tubing O.D. D1 | For tubing O.D. D2 | [mm] | D5 ⌀ | L1 | [g] | | | |
| 4 | 4 | 2.4 | 9.8 | 37.7 | 9.1 | **130645** | **CRQS-4** | **1** |
| 6 | 6 | 3.7 | 11.8 | 40.3 | 14 | **130646** | **CRQS-6** | **1** |
| 8 | 8 | 5.8 | 13.8 | 44.9 | 18 | **130647** | **CRQS-8** | **1** |
| 10 | 10 | 6.6 | 16.8 | 52 | 29 | **130648** | **CRQS-10** | **1** |
| 12 | 12 | 7.9 | 19.8 | 55.8 | 44 | **130649** | **CRQS-12** | **1** |
| 16 | 16 | 10.5 | 23.7 | 66.5 | 63 | **130650** | **CRQS-16** | **1** |
| **Reducing** | | | | | | | | |
| 6 | 4 | 2.4 | 12 | 38.8 | 11 | **130651** | **CRQS-6-4** | **1** |
| 8 | 6 | 3.7 | 14 | 42.4 | 15 | **130652** | **CRQS-8-6** | **1** |
| 10 | 8 | 5.8 | 17 | 48.5 | 22 | **130653** | **CRQS-10-8** | **1** |
| 12 | 10 | 6.6 | 20 | 53.9 | 35 | **130654** | **CRQS-12-10** | **1** |
| 16 | 12 | 7.9 | 24 | 61.1 | 50 | **130655** | **CRQS-16-12** | **1** |

1) Packaging unit.

**Push-in bulkhead connector CRQSS**

Design:
Bulkhead

M thread

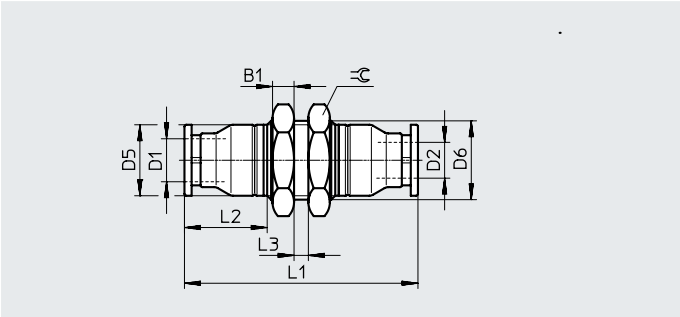


| Dimensions and ordering data | | | | | | | | | | | | | |
|---|---|---|---|---|---|---|---|---|---|---|---|---|---|
| Pneumatic connection | | Nominal width | Dimensions [mm] | | | | | | | Weight/piece | Part no. | Type | PU[1] |
| For tubing O.D. D1 | For tubing O.D. D2 | [mm] | B1 | D5 ⌀ | D6 ⌀ | L1 | L2 | L3 max. | ⌲ | [g] | | | |
| 4 | 4 | 2.4 | 4 | 9.8 | M12x1 | 43.7 | 15.4 | 4 | 14 | 19 | **164210** | **CRQSS-4** | **1** |
| 6 | 6 | 3.7 | 4 | 11.8 | M14x1 | 46.3 | 15.6 | 6 | 17 | 27 | **164211** | **CRQSS-6** | **1** |
| 8 | 8 | 5.7 | 4 | 13.8 | M16x1 | 50.9 | 17.9 | 6 | 19 | 35 | **164213** | **CRQSS-8** | **1** |
| 10 | 10 | 6.7 | 5 | 16.8 | M20x1 | 57 | 20 | 6 | 24 | 60 | **164215** | **CRQSS-10** | **1** |
| 12 | 12 | 7.9 | 6 | 19.8 | M22x1 | 62.8 | 21.9 | 6 | 27 | 87 | **164217** | **CRQSS-12** | **1** |
| 16 | 16 | 10.4 | 6 | 23.7 | M27x1.5 | 72.6 | 26.7 | 6 | 32 | 118 | **164219** | **CRQSS-16** | **1** |

1) Packaging unit.

# Datasheet

**Push-in L-fitting CRQSL**
Rotatable
Male thread with external hex

Design:
L-shape

M thread

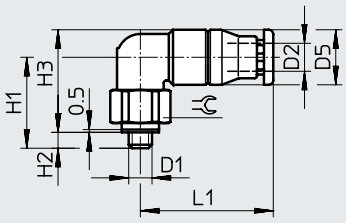


R thread

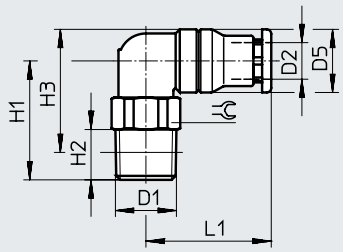


**Dimensions and ordering data**

| Pneumatic connection | | Nominal width | Dimensions [mm] | | | | | | | Weight/piece | Part no. | Type | PU[1] |
|---|---|---|---|---|---|---|---|---|---|---|---|---|---|
| Male thread<br>D1 | For tubing O.D.<br>D2 | [mm] | D5<br>⌀ | H1 | H2 | H3 | H4 | L1 | ⬡ | [g] | | | |
| **Metric thread with sealing ring** | | | | | | | | | | | | | |
| M5x0.8 | 4 | 2 | 9.8 | 17 | 3 | 18.9 | 0.5 | 22.4 | 10 | 12 | **162870** | **CRQSL-M5-4** | **1** |
| | 6 | 2 | 11.8 | 19 | 3 | 21.9 | 0.5 | 23.6 | 12 | 18 | **162871** | **CRQSL-M5-6** | **1** |
| **R thread** | | | | | | | | | | | | | |
| R1/8 | 4 | 2.2 | 9.8 | 19 | 8 | 19.9 | – | 22.4 | 10 | 14 | **132598** | **CRQSL-1/8-4** | **1** |
| | 6 | 3.9 | 11.8 | 20.5 | 8 | 22.4 | – | 23.6 | 12 | 19 | **162872** | **CRQSL-1/8-6** | **1** |
| | 8 | 5.2 | 13.8 | 23 | 8 | 25.9 | – | 26.4 | 14 | 26 | **162873** | **CRQSL-1/8-8** | **1** |
| R1/4 | 6 | 3.6 | 11.8 | 23 | 11 | 22.9 | – | 23.6 | 14 | 26 | **132599** | **CRQSL-1/4-6** | **1** |
| | 8 | 5.1 | 13.8 | 25 | 11 | 25.9 | – | 26.4 | 14 | 30 | **162874** | **CRQSL-1/4-8** | **1** |
| | 10 | 6 | 16.8 | 28.5 | 11 | 30.9 | – | 30.5 | 17 | 42 | **162875** | **CRQSL-1/4-10** | **1** |
| R3/8 | 10 | 6 | 16.8 | 28.5 | 12 | 30.6 | – | 30.5 | 17 | 49 | **162876** | **CRQSL-3/8-10** | **1** |
| | 12 | 8.1 | 19.8 | 30 | 12 | 33.6 | – | 33.4 | 21 | 65 | **162877** | **CRQSL-3/8-12** | **1** |
| R1/2 | 12 | 7.9 | 19.8 | 34 | 15 | 35.7 | – | 33.4 | 22 | 85 | **162878** | **CRQSL-1/2-12** | **1** |
| | 16 | 9.4 | 23.7 | 36 | 15 | 39.7 | – | 40.7 | 24 | 99 | **162879** | **CRQSL-1/2-16** | **1** |

1) Packaging unit.

# Datasheet

**Push-in L-connector CRQSL**

Design:
L-shape

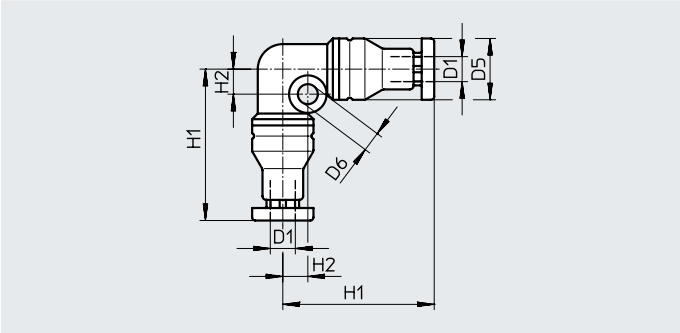


**Dimensions and ordering data**

| Pneumatic connection<br>For tubing O.D.<br>D1 | Nominal width<br>[mm] | Dimensions [mm]<br>D5<br>Ø | D6<br>Ø | H1 | H2 | Weight/ piece<br>[g] | Part no. | Type | PU[1] |
|---|---|---|---|---|---|---|---|---|---|
| 4 | 2.1 | 9.8 | 3.2 | 24.4 | 4 | 13 | **130662** | **CRQSL-4** | **1** |
| 6 | 3.5 | 11.8 | 3.2 | 26.6 | 5 | 20 | **130663** | **CRQSL-6** | **1** |
| 8 | 5.1 | 13.8 | 3.2 | 29.9 | 6 | 27 | **130664** | **CRQSL-8** | **1** |
| 10 | 6.1 | 16.8 | 4.2 | 35 | 7 | 42 | **130665** | **CRQSL-10** | **1** |
| 12 | 7.8 | 19.8 | 4.2 | 37.9 | 8 | 62 | **130666** | **CRQSL-12** | **1** |
| 16 | 9.4 | 23.7 | 4.2 | 45.2 | 9.5 | 91 | **130667** | **CRQSL-16** | **1** |

1) Packaging unit.

# Datasheet

**Push-in T-fitting CRQST**
Rotatable
Male thread with external hex

Design:
T-shape


M thread

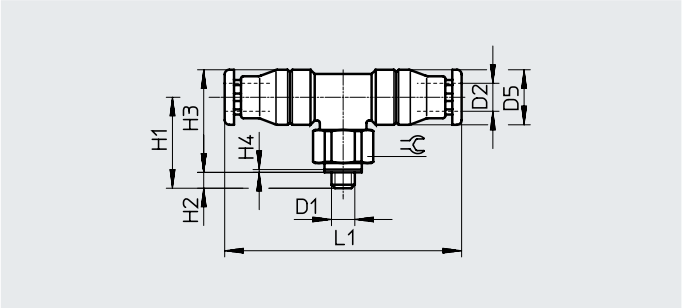



R thread

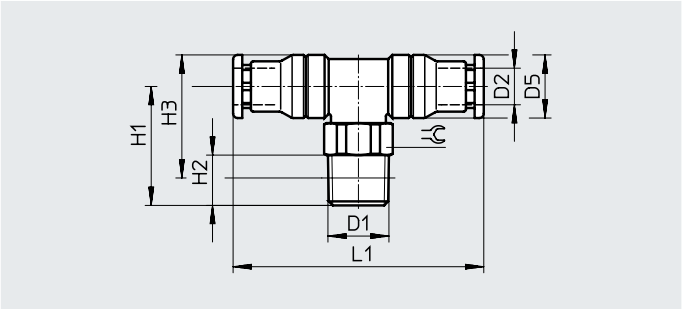


**Dimensions and ordering data**

| Pneumatic connection | | Nominal width | Dimensions [mm] | | | | | | | Weight/piece | Part no. | Type | PU[1] |
|---|---|---|---|---|---|---|---|---|---|---|---|---|---|
| Male thread | For tubing O.D. | | D5 ⌀ | H1 | H2 | H3 | H4 | L1 | ⬡ | | | | |
| D1 | D2 | [mm] | | | | | | | | [g] | | | |
| **Metric thread with sealing ring** | | | | | | | | | | | | | |
| M5x0.8 | 4 | 2 | 9.8 | 17 | 3 | 18.9 | 0.5 | 44.4 | 10 | 17 | **164200** | **CRQST-M5-4** | **1** |
| | 6 | 2 | 11.8 | 19 | 3 | 21.9 | 0.5 | 47.3 | 12 | 24 | **164201** | **CRQST-M5-6** | **1** |
| **R thread** | | | | | | | | | | | | | |
| R1/8 | 6 | 3.7 | 11.8 | 20.5 | 8 | 22.4 | – | 47.3 | 12 | 25 | **164202** | **CRQST-1/8-6** | **1** |
| | 8 | 5 | 13.8 | 23 | 8 | 25.9 | – | 52.5 | 14 | 33 | **164203** | **CRQST-1/8-8** | **1** |
| R1/4 | 8 | 5 | 13.8 | 25 | 11 | 25.9 | – | 52.5 | 14 | 38 | **164204** | **CRQST-1/4-8** | **1** |
| | 10 | 5.9 | 16.8 | 28.5 | 11 | 30.9 | – | 61 | 17 | 56 | **164205** | **CRQST-1/4-10** | **1** |
| R3/8 | 10 | 5.9 | 16.8 | 28.5 | 12 | 30.6 | – | 61 | 17 | 62 | **164206** | **CRQST-3/8-10** | **1** |
| | 12 | 8.1 | 19.8 | 30 | 12 | 33.6 | – | 66.6 | 21 | 85 | **164207** | **CRQST-3/8-12** | **1** |
| R1/2 | 12 | 8.1 | 19.8 | 34 | 15 | 35.7 | – | 66.6 | 22 | 105 | **164208** | **CRQST-1/2-12** | **1** |
| | 16 | 9.5 | 23.7 | 36 | 15 | 39.7 | – | 81.4 | 24 | 128 | **164209** | **CRQST-1/2-16** | **1** |

1) Packaging unit.

# Datasheet

**Push-in T-connector CRQST**

Design:
T-shape

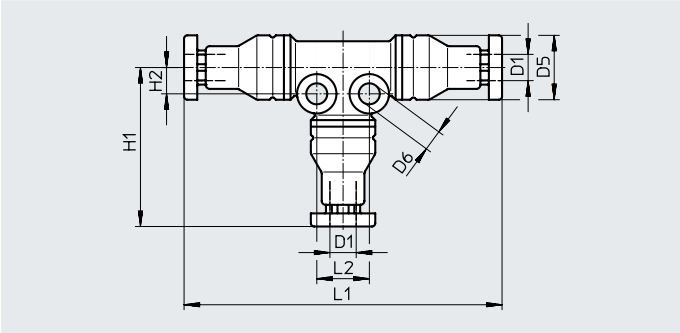


**Dimensions and ordering data**

| Pneumatic connection For tubing O.D. D1 | Nominal width [mm] | Dimensions [mm] D5 ⌀ | D6 ⌀ | H1 | H2 | L1 | L2 | Weight/ piece [g] | Part no. | Type | PU[1)] |
|---|---|---|---|---|---|---|---|---|---|---|---|
| 4 | 2.1 | 9.8 | 3.2 | 24.4 | 4 | 48.4 | 8 | 18 | **130668** | **CRQST-4** | **1** |
| 6 | 3.5 | 11.8 | 3.2 | 26.6 | 5 | 53.3 | 10 | 27 | **130669** | **CRQST-6** | **1** |
| 8 | 5 | 13.8 | 3.2 | 29.9 | 6 | 59.5 | 12 | 37 | **130670** | **CRQST-8** | **1** |
| 10 | 6.1 | 16.8 | 4.2 | 35 | 7 | 69.9 | 14 | 59 | **130671** | **CRQST-10** | **1** |
| 12 | 8 | 19.8 | 4.2 | 37.9 | 8 | 75.6 | 16 | 87 | **130672** | **CRQST-12** | **1** |
| 16 | 9.7 | 23.7 | 4.2 | 45.2 | 9.5 | 90.4 | 19 | 126 | **130673** | **CRQST-16** | **1** |

1) Packaging unit.

**Push-in Y-connector CRQSY**

Design:
Y-shape

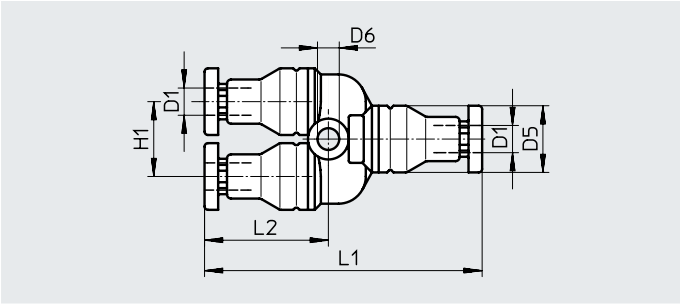


**Dimensions and ordering data**

| Pneumatic connection For tubing O.D. D1 | Nominal width [mm] | Dimensions [mm] D5 ⌀ | D6 ⌀ | H1 | L1 | L2 | Weight/piece [g] | Part no. | Type | PU[1)] |
|---|---|---|---|---|---|---|---|---|---|---|
| 4 | 2 | 9.8 | 3.2 | 11 | 41.1 | 18.4 | 15 | **130656** | **CRQSY-4** | **1** |
| 6 | 3.3 | 11.8 | 3.2 | 13 | 44.3 | 18.6 | 24 | **130657** | **CRQSY-6** | **1** |
| 8 | 4.9 | 13.8 | 3.2 | 15 | 51.4 | 20.9 | 34 | **130658** | **CRQSY-8** | **1** |
| 10 | 5.6 | 16.8 | 4.3 | 18 | 58.5 | 23.5 | 52 | **130659** | **CRQSY-10** | **1** |
| 12 | 7 | 19.8 | 4.3 | 21 | 64.8 | 25.4 | 80 | **130660** | **CRQSY-12** | **1** |
| 16 | 8.2 | 23.7 | 4.3 | 25 | 78.5 | 30.2 | 121 | **130661** | **CRQSY-16** | **1** |

1) Packaging unit