# Flat cylinders EZH/DZF/DZH

- Extremely flat design
- Protected against torsion thanks to special piston shape
- Compact assembly with block mounting
- Wide variety of mounting options

# Flat cylinders EZH/DZF/DZH

Product range overview

| Function | Design | Type | Piston ∅ [mm] | Stroke [mm] | |
|---|---|---|---|---|---|
| **Single-acting** | **EZH** | | | | |
| | 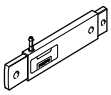 | **EZH** Single-ended piston rod | 1.5x6.5 | 10 | |
| | | | 2.5x9 | 10, 20 | |
| | | | 5x20 | 25, 50 | |
| | | | 10x40 | 40 | |
| | | | | | |
| **Double-acting** | **DZF** | | | | |
| | 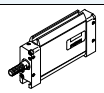 | **DZF** Single-ended piston rod | 12, 18, 25 | 10, 25, 40, 50, 80, 100, 125, 160, 200 | 1 … 200 |
| | | | 32, 40, 50, 63 | 10, 25, 40, 50, 80, 100, 125, 160, 200, 250, 320 | 1 … 320 |
| | 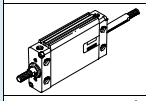 | **DZF-…-S2** Through piston rod | 12, 18, 25 | – | 1 … 200 |
| | | | 32, 40, 50, 63 | – | 1 … 320 |
| | 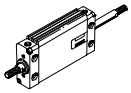 | **DZF-…-S20** Through, hellow piston rod | 12, 18, 25 | – | 1 … 200 |
| | | | 32, 40, 50, 63 | – | 1 … 320 |
| | | | | | |
| **Double-acting** | **DZH** | | | | |
| | 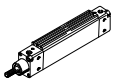 | **DZH** Single-ended piston rod | 16 | 25, 40, 50, 80, 100, 125, 160, 200 | 1 … 200 |
| | | | 20 | 25, 40, 50, 80, 100, 125, 160, 200, 250, 320 | 1 … 320 |
| | | | 25 | 25, 40, 50, 80, 100, 125, 160, 200, 250, 320, 400, 500 | 1 … 500 |
| | | | 32, 40, 50, 63 | 25, 40, 50, 80, 100, 125, 160, 200, 250, 300 | 1 … 1000 |
| | 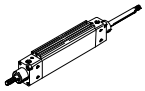 | **DZH-…-S2** Through piston rod | 16 | – | 1 … 200 |
| | | | 20 | – | 1 … 320 |
| | | | 25 | – | 1 … 500 |
| | | | 32, 40, 50, 63 | – | 1 … 1000 |
| | 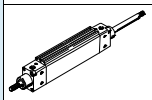 | **DZH-…-S20** Through, hellow piston rod | 16 | – | 1 … 200 |
| | | | 20 | – | 1 … 320 |
| | | | 25 | – | 1 … 500 |

# Flat cylinders EZH/DZF/DZH

Product range overview

| Type | Position sensing | Piston rod | | Non-rotating | S6 Heat resistant seals up to 120 °C | ➔ Page/Internet |
|---|---|---|---|---|---|---|
| | | with female thread | with male thread | | | |
| | | | | | | |
| **EZH** Single-ended piston rod | ■ for 10x40 | – | – | ■ | – | 4 |
| | | | | | | |
| | | | | | | |
| **DZF** Single-ended piston rod | ■ | ■ | ■ | ■ | ■ | 8 |
| **DZF-...-S2** Through piston rod | ■ | ■ | ■ | ■ | – | 8 |
| **DZF-...-S20** Through, hellow piston rod | ■ | – | ■ | ■ | – | 8 |
| | | | | | | |
| | | | | | | |
| **DZH** Single-ended piston rod | ■ | – | ■ | ■ | ■ | 22 |
| **DZH-...-S2** Through piston rod | ■ | – | ■ | ■ | – | 22 |
| **DZH-...-S20** Through, hellow piston rod | ■ | – | ■ | ■ | – | 22 |

# Flat cylinders EZH

Peripherals overview and type codes

| Piston area 1.5x6.5/2.5x9/5x20 mm | Piston area 10x40 mm |
|---|---|

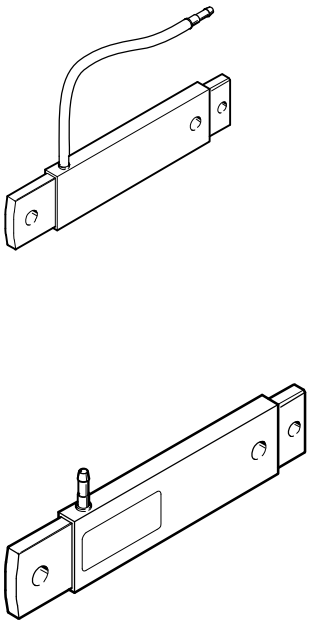

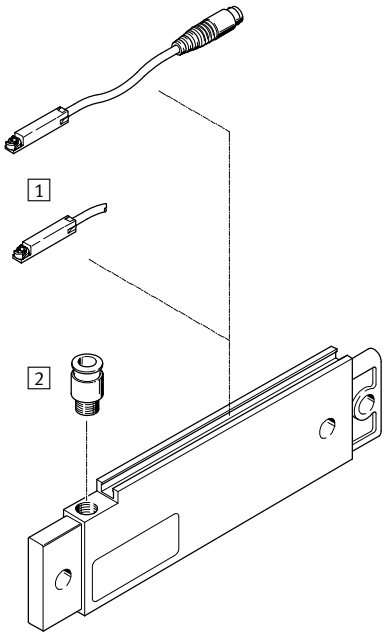


| Accessories | | | |
|---|---|---|---|
| | | Description | ➔ Page/Internet |
| 1 | Proximity sensor<br>SME/SMT-8 | Can be integrated in the cylinder profile barrel | 37 |
| 2 | Push-in fitting<br>QSM-G⅛-...-I, QS-G⅛-...-I | For connecting compressed air tubing with standard external diameters | qs |

| EZH | – | 2.5x9 | – | 20 | – | | – | B |
|---|---|---|---|---|---|---|---|---|

| Type | |
|---|---|
| Single-acting | |
| EZH | Flat cylinder |

| Piston area [mm] |
|---|

| Stroke [mm] |
|---|

| Position sensing | |
|---|---|
| | No position sensing |
| A | For proximity sensing |

| Generation | |
|---|---|
| | Series A |
| B | Series B |

# Flat cylinders EZH

Technical data

Function

**EZH-...**

Without end-position sensing

**EZH-...-A-B**

For end position sensing

- Ø - Diameter approx. 3 ... 22 mm
- | - Stroke length 10 ... 50 mm

EZH-5/20-...-B EZH-10/40-40-A-B

| General technical data | | | | | | |
|---|---|---|---|---|---|---|
| Piston area<br>Stroke length | 1.5x6.5<br>10 | 2.5x9<br>10 | 2.5x9<br>20 | 5x20<br>25 | 5x20<br>50 | 10x40<br>40 |
| Equivalent piston ∅ | 3 | 6 | 6 | 12 | 12 | 22 |
| Pneumatic connection | Barbed fitting PK-3 for 3 mm plastic tubing | | | | | G1/8 |
| Constructional design | Piston, piston rod | | | | | |
| Cushioning | None | | | | | |
| Position sensing | – | – | – | – | – | For proximity sensing |
| Type of mounting | With transverse bore | | | | | |
| Mounting position | Any | | | | | |

| Operating and environmental conditions | | | | | | |
|---|---|---|---|---|---|---|
| Piston area<br>Stroke length | 1.5x6.5<br>10 | 2.5x9<br>10 | 2.5x9<br>20 | 5x20<br>25 | 5x20<br>50 | 10x40<br>40 |
| Operating medium | Compressed air in accordance with ISO 8573-1:2010 [7:4:4] | | | | | |
| Note on operating/pilot medium | Operation with lubricated medium possible (in which case lubricated operation will always be required) | | | | | |
| Operating pressure [bar] | 3.0 ... 6.0 | 2.8 ... 6.0 | 2.8 ... 6.0 | 2.5 ... 6.0 | 2.5 ... 6.0 | 2.5 ... 6.0 |
| Ambient temperature[1] [°C] | 0 ... +60 | | | | | |
| Corrosion resistance class CRC[2] | 2 | | | | | |

1) Observe operating range of proximity sensors
2) Corrosion resistance class CRC 2 to Festo standard FN 940070
Moderate corrosion stress. Indoor applications in which condensation may occur. External visible parts with primarily decorative requirements for the surface and which are in direct contact with the ambient atmosphere typical for industrial applications.

| Forces [N] | | | | | | |
|---|---|---|---|---|---|---|
| Piston area<br>Stroke length | 1.5x6.5<br>10 | 2.5x9<br>10 | 2.5x9<br>20 | 5x20<br>25 | 5x20<br>50 | 10x40<br>40 |
| Theoretical force at 6 bar, advancing | 3.8 | 10 | 10 | 52 | 49 | 205 |
| Theoretical spring return force | | | | | | |
| min. | 1 | 3 | 2.8 | 8 | 10.6 | 18 |
| max. | 1.7 | 4 | 4.4 | 10.6 | 13.6 | 28 |

| Weights [g] | | | | | | |
|---|---|---|---|---|---|---|
| Piston area<br>Stroke length | 1.5x6.5<br>10 | 2.5x9<br>10 | 2.5x9<br>20 | 5x20<br>25 | 5x20<br>50 | 10x40<br>40 |
| Product weight | 4 | 11 | 17 | 108 | 145 | 242 |

## Materials

Sectional view

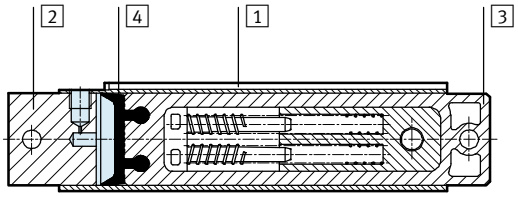


| Piston area<br>Stroke length | | 1.5x6.5<br>10 | 2.5x9<br>10 | 2.5x9<br>20 | 5x20<br>25 | 5x20<br>50 | 10x40<br>40 |
|---|---|---|---|---|---|---|---|
| 1 | Housing | Aluminium | | | | | |
| 2 | Cover | Aluminium | | | | | |
| 3 | Rectangular piston | Polyamide, reinforced | Copper-alloy, nickel-plated | | Steel, nickel-plated | | Polyamide, reinforced |
| 4 | Seal | Polyurethane | | | | | |
| – | Note on materials | Contains PWIS (paint-wetting impairment substances) | – | | | | |

## Dimensions EZH-1,5/6,5-10

Download CAD data ➔ **www.festo.com**

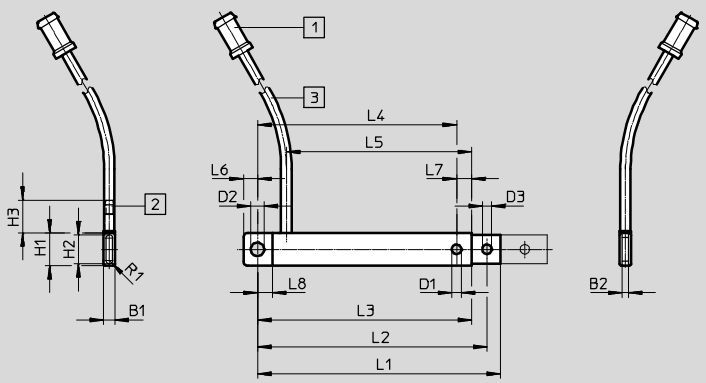


1 Barbed fittings for 3 mm plastic tubing
2 Barbed fittings for 1.5 mm plastic tubing
3 200 mm tubing length

| Type | B1<br>–0.1 | B2 | D1<br>∅ | D2<br>∅<br>H11 | D3<br>∅ | H1 | H2 | H3 | L1<br>±0.8 | L2<br>±0.9 | L3<br>±0.3 | L4<br>±0.4 | L5 | L6 | L7 | L8 | R1 |
|---|---|---|---|---|---|---|---|---|---|---|---|---|---|---|---|---|---|
| EZH-1,5/6,5-10 | 2.5 | 1.4 | 2.1 | 3 | 2.1 | 7.3 | 6.45 | 7.3 | 54 | 51 | 47.6 | 44.2 | 41.2 | 3.1 | 3.4 | 3.3 | 0.725 |

## EZH-2,5/9-... and EZH-5/20-...

Download CAD data ➔ **www.festo.com**

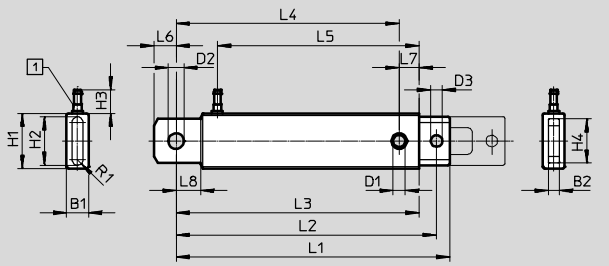


1 Barbed fittings for 3 mm plastic tubing

| Type | B1 | B2 | D1<br>∅ | D2<br>∅<br>H11 | D3<br>∅ | H1 | H2 | H3 | H4 |
|---|---|---|---|---|---|---|---|---|---|
| EZH-2,5/9-10 | $4.9_{\pm 0.05}$ | 2.5 | 3.1 | 4 | 3.1 | 12 | 9.9 | 10.7 | 9 |
| EZH-2,5/9-20 | $4.9_{\pm 0.05}$ | 2.5 | 3.1 | 4 | 3.1 | 12 | 9.9 | 10.7 | 9 |
| EZH-5/20-25 | $10_{-0.1}$ | 5 | 5.5 | 7 | 5.2 | 25 | 21.9 | 10.7 | 20 |
| EZH-5/20-50 | $10_{-0.1}$ | 5 | 5.5 | 7 | 5.2 | 25 | 21.9 | 10.7 | 20 |

| Type | L1 | L2 | L3<br>±0.3 | L4<br>±0.4 | L5 | L6 | L7 | L8 | R1 |
|---|---|---|---|---|---|---|---|---|---|
| EZH-2,5/9-10 | $62.4_{\pm 0.7}$ | $58.4_{\pm 0.8}$ | 54 | 49.5 | 43.6 | 4.5 | 4.5 | 5.5 | 1.2 |
| EZH-2,5/9-20 | $94.5_{\pm 0.7}$ | $90.5_{\pm 0.8}$ | 86.1 | 81.6 | 75.5 | 4.5 | 4.5 | 5.5 | 1.2 |
| EZH-5/20-25 | $123.9_{+0.6/-0.8}$ | $117.9_{+0.7/-0.9}$ | 110 | 101 | 91.3 | 10 | 9 | 11 | 2.45 |
| EZH-5/20-50 | $195.9_{+0.6/-0.8}$ | $189.9_{+0.7/-0.9}$ | 182 | 173 | 163.3 | 10 | 9 | 11 | 2.45 |

**Dimensions EZH-10/40-40-A-B** Download CAD data ➔ **www.festo.com**

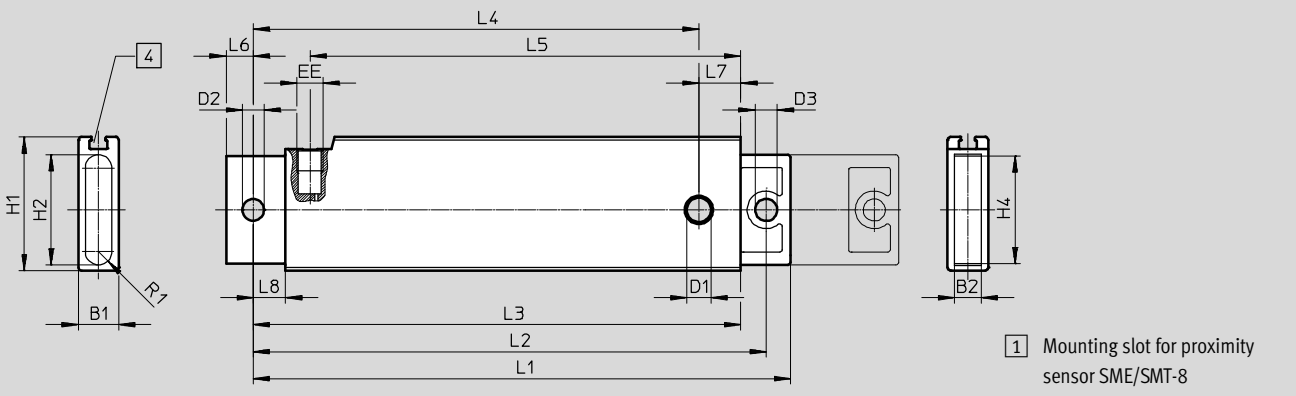


| Type | B1 | B2 | D1 | D2 | D3 | EE | H1 | H2 | H4 | L1 |
|---|---|---|---|---|---|---|---|---|---|---|
| | | | ∅ | ∅ | ∅ | | | | | |
| | –0.3 | –0.2 | | H11 | | | | | –0.1/–0.3 | +0.7/–1.4 |
| EZH-10/40-40-A-B | 15 | 10 | 8.5 | 8 | 8.2 | G⅛ | 49.5 | 40.7 | 40 | 198.9 |

| Type | L2 | L3 | L4 | L5 | L6 | L7 | L8 | R1 |
|---|---|---|---|---|---|---|---|---|
| | +0.9/–1.6 | ±0.4 | ±0.4 | | | | | |
| EZH-10/40-40-A-B | 189.9 | 180.5 | 165 | 159.5 | 10 | 15.5 | 12 | 4.925 |

**Ordering data**

| Type | Piston area [mm] | Stroke [mm] | Part No. | Type |
|---|---|---|---|---|
| Without end-position sensing | | | | |
| | 1.5x6.5 | 10 | **13009** | **EZH-1,5/6,5-10** |
| | 2.5x9 | 10 | **164991** | **EZH-2,5/9-10-B** |
| | | 20 | **164992** | **EZH-2,5/9-20-B** |
| | 5x20 | 25 | **164993** | **EZH-5/20-25-B** |
| | | 50 | **164994** | **EZH-5/20-50-B** |
| | | | | |
| For end position sensing | | | | |
| | 10x40 | 40 | **164990** | **EZH-10/40-40-A-B** |

# Flat cylinders DZF

Peripherals overview

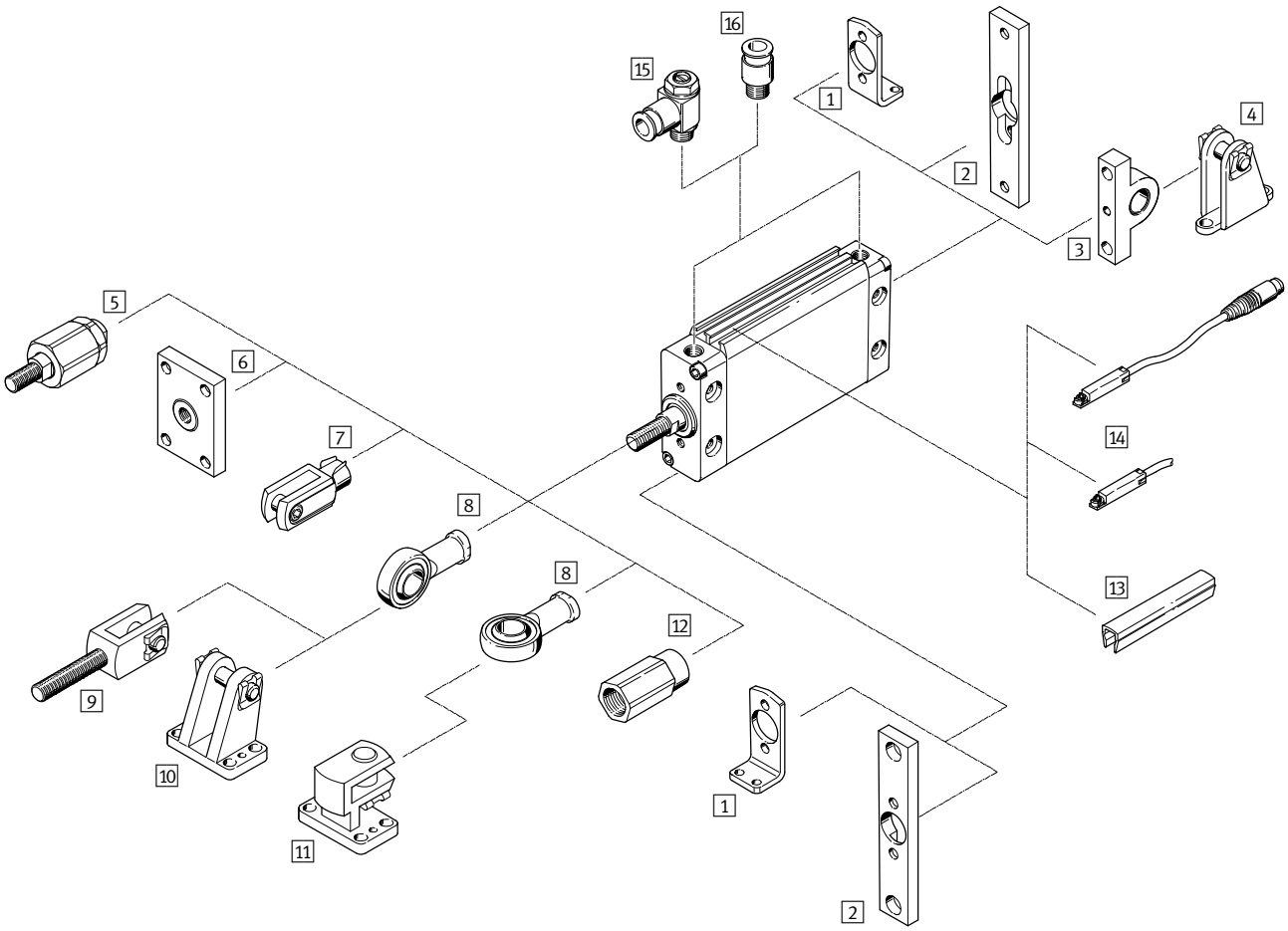

| Mounting attachments and accessories | | | | |
|---|---|---|---|---|
| | Description | Piston ∅ 16 … 40 mm | Piston ∅ 50 … 63 mm | ➔ Page/Internet |
| 1 Foot mounting HZF | for bearing and end caps | ■ | ■ | 19 |
| 2 Flange mounting FZF | for bearing and end caps | ■ | ■ | 19 |
| 3 Swivel flange SZF | for end caps | ■ | ■ | 20 |
| 4 Clevis foot LZF | – | ■ | ■ | 20 |
| 5 Self-aligning rod coupler FK | for compensating radial and angular deviations | ■ | ■ | 21 |
| 6 Coupling piece KSZ | for cylinders with a non-rotating piston rod to compensate for radial deviations | ■ | ■ | 21 |
| 7 Rod clevis SG | permits a swivelling movement of the cylinder in one plane | ■ | ■ | 21 |
| 8 Rod eye SGS | with spherical bearing | ■ | ■ | 21 |
| 9 Rod clevis SGA | with male thread | ■ | ■ | 21 |
| 10 Clevis foot LBG | – | ■ | ■ | 21 |
| 11 Right-angle clevis foot LQG | – | ■ | ■ | 21 |
| 12 Adapter AD | for a vacuum generator | ■ S20 | – | 21 |
| 13 Slot cover ABP-5-S | to protect the sensor cable and keep dirt out of the sensor slots | ■ | ■ | 37 |
| 14 Proximity sensor SME/SMT-8 | can be integrated in the cylinder profile barrel | ■ | ■ | 37 |
| 15 One-way flow control valve GRLA/GRLZ | to regulate speed | ■ | ■ | 38 |
| 16 Push-in fitting QS | for connecting compressed air tubing with standard external diameters | ■ | ■ | qs |

# Flat cylinders DZF

Type codes

| DZF | – | 25 | – | 100 | – | | – | P | – | A | – | |
|---|---|---|---|---|---|---|---|---|---|---|---|---|

| Type | |
|---|---|
| Double-acting | |
| DZF | Flat cylinder |

| Piston ∅ [mm] |
|---|

| Stroke [mm] |
|---|

| Piston rod thread | |
|---|---|
| | Female thread |
| A | Male thread |

| Cushioning | |
|---|---|
| P | Flexible cushioning rings/plates at both ends |

| Position sensing | |
|---|---|
| A | For proximity sensing |

| Variant | |
|---|---|
| S2 | Through piston rod |
| S6 | Heat resistant seals up to 120 °C |
| S20 | Through, hollow piston rod |

# Flat cylinders DZF

Technical data

Function

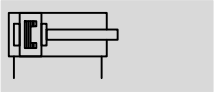

Diameter
12 … 63 mm

Stroke length
1 … 320 mm

www.festo.com

Variants



S2

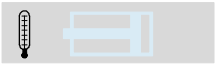

S6



S20

| General technical data | | | | | | | | |
|---|---|---|---|---|---|---|---|---|
| Piston ∅ | | 12 | 18 | 25 | 32 | 40 | 50 | 63 |
| Pneumatic connection | | M5 | M5 | M5 | G1/8 | G1/8 | G1/4 | G1/4 |
| Piston rod thread | female | M3 | M4 | M5 | M6 | M8 | M10 | M10 |
| | male | M6 | M8 | M10x1.25 | M10x1.25 | M12x1.25 | M16x1.5 | M16x1.5 |
| Constructional design | | Piston, piston rod | | | | | | |
| Cushioning | | Flexible cushioning rings/plates at both ends | | | | | | |
| Position sensing | | For proximity sensing | | | | | | |
| Type of mounting | | Via through holes | | | | | | |
| | | With female thread | | | | | | |
| | | With accessories | | | | | | |
| Mounting position | | Any | | | | | | |

| Operating pressure [bar] | | | | | | | |
|---|---|---|---|---|---|---|---|
| Piston ∅ | 12 | 18 | 25 | 32 | 40 | 50 | 63 |
| | 1.6 … 10 | 1 … 10 | | | | | |

| Ambient conditions | | |
|---|---|---|
| Flat cylinder | DZF-… | DZF-…-S6 |
| Operating medium | Compressed air in accordance with ISO 8573-1:2010 [7:4:4] | |
| Note on operating/pilot medium | Operation with lubricated medium possible (in which case lubricated operation will always be required) | |
| Ambient temperature[1] [°C] | 0 … +80 | 0 … +120 |
| Corrosion resistance class CRC[2] | 2 | 2 |

1) Observe operating range of proximity sensors
2) Corrosion resistance class CRC 2 to Festo standard FN 940070
Moderate corrosion stress. Indoor applications in which condensation may occur. External visible parts with primarily decorative requirements for the surface and which are in direct contact with the ambient atmosphere typical for industrial applications.

| Forces [N] and impact energy [J] | | | | | | | | |
|---|---|---|---|---|---|---|---|---|
| Piston ∅ | | 12 | 18 | 25 | 32 | 40 | 50 | 63 |
| Theoretical force at 6 bar, advancing | | 68 | 162 | 295 | 483 | 754 | 1178 | 1870 |
| | S2/S20 | 51 | 122 | 247 | 415 | 633 | 990 | 1682 |
| Theoretical force at 6 bar, retracting | | 51 | 122 | 247 | 415 | 633 | 990 | 1682 |
| | S2/S20 | 51 | 122 | 247 | 415 | 633 | 990 | 1682 |
| Max. impact energy at end positions | | 0.09 | 0.10 | 0.10 | 0.40 | 0.52 | 0.64 | 0.70 |

| Torque [Nm] and torsional backlash [°] | | | | | | | |
|---|---|---|---|---|---|---|---|
| Piston ∅ | 12 | 18 | 25 | 32 | 40 | 50 | 63 |
| Max. torque at the piston rod[1)] | 0.1 | 0.2 | 0.5 | 0.8 | 1.0 | 1.2 | 1.5 |
| Max. torsional backlash of the piston rod | ±2.5 | ±1.2 | ±1.0 | ±0.8 | ±0.6 | ±0.5 | ±0.4 |

1) The max. torque must also be observed when fitting mounting attachments to the piston rod

| Weights [g] | | | | | | | |
|---|---|---|---|---|---|---|---|
| Piston ∅ | 12 | 18 | 25 | 32 | 40 | 50 | 63 |
| Product weight at 0 mm stroke | 96 | 107 | 168 | 272 | 480 | 855 | 1380 |
| Additional weight per 10 mm stroke | 9 | 13 | 18 | 24 | 40 | 64 | 91 |

## Safety clearances for reliable switching function

### Cylinder – Ferritic components

If the cylinder is mounted on a ferritic component, piston position sensing is possible using proximity sensors SMT-8.

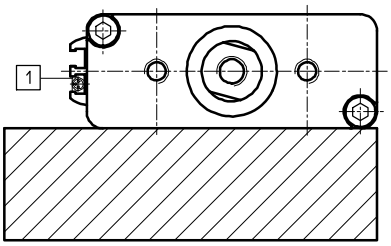


1 SMT-8...

If a proximity sensor SME-8 is used, then with piston ∅ 12 to 32 mm, a minimum clearance to the ferritic component of 10 mm must be maintained.

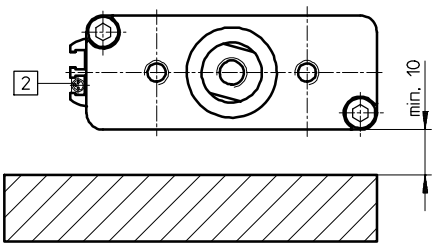


2 SME-8...

### Cylinder – Cylinder

Safety clearance X must be maintained when connecting cylinders together in series, as the stray fields of the switching magnets can result in incorrect switching.

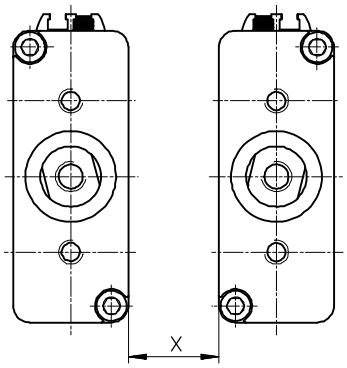


| Piston ∅ | | 12 | 18 | 25 | 32 | 40 | 50 | 63 |
|---|---|---|---|---|---|---|---|---|
| Min. safety clearance X [mm] | SMT-8... | 35 | | | 25 | 45 | | 80 |
| | SME-8... | 50 | | | 45 | 65 | | 50 |

## Materials

Sectional view

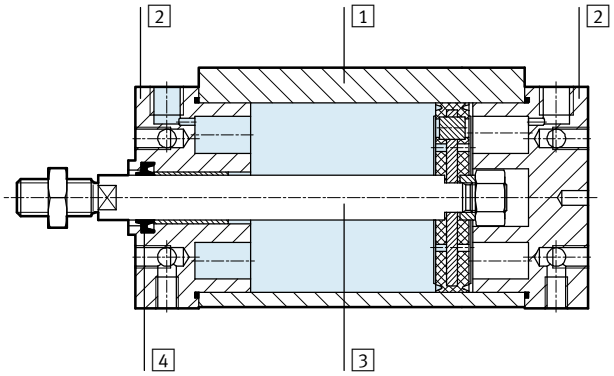


| Flat cylinder | | DZF-... | DZF-...S6 |
|---|---|---|---|
| 1 Cylinder barrel | | Wrought aluminium alloy, anodised | Wrought aluminium alloy, anodised |
| 2 Bearing end cap | | Wrought aluminium alloy | Wrought aluminium alloy |
| 3 Piston rod | ∅ 12 ... 25 | High-alloy stainless steel | High-alloy stainless steel |
| | ∅ 32 ... 63 | High-alloy steel | High-alloy steel |
| 4 Dynamic seals | | Polyurethane | Fluorocarbon rubber |

## Dimensions

Download CAD data ➔ **www.festo.com**

∅ 12, 18

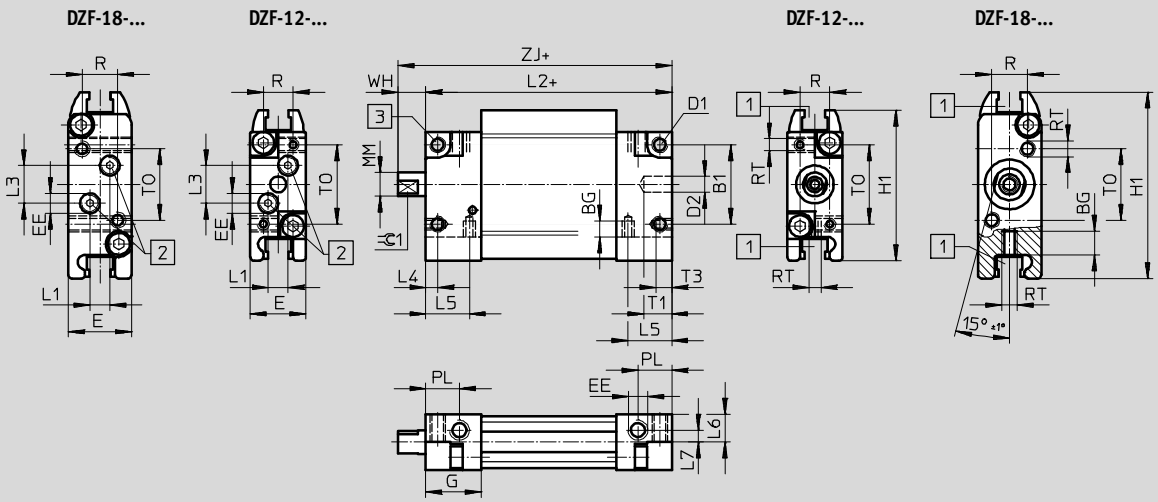


1 Mounting slot for proximity sensors

2 Additional air connections, sealed with blanking plugs

3 Max. tightening torque

\+ = plus stroke length

| ∅ [mm] | B1 | BG | D1 | D2 ∅ H9 | E | EE | G | H1 | L1 | L2 | L3 | L4 | L5 |
|---|---|---|---|---|---|---|---|---|---|---|---|---|---|
| 12 | 20 | 4 | M4 | 4 | 14 | M5 | 14 | 38 | 5 | 62 | 9.5 | 3 | 11 |
| 18 | 20 | 6 | M4 | 4 | 16 | M5 | 14 | 47 | 5 | 62 | 9.5 | 3.5 | 5 |

| ∅ [mm] | L6 | L7 | MM ∅ | PL | R | RT | T1 | T3 | TO | WH | ZJ | ⌀1 h13 | Max. tightening torque [Nm] +10% |
|---|---|---|---|---|---|---|---|---|---|---|---|---|---|
| 12 | 7 | 3 | 6 | 8.5 | 7.5 | M3 | 7 | 4 | 20 | 7 | 69 | 5 | 2.9 |
| 18 | – | – | 8 | 8.5 | 9 | M4 | 7 | 6 | 18 | 7 | 69 | 7 | 2.9 |

**Dimensions** Download CAD data ➔ **www.festo.com**

Piston ∅ 25 … 63

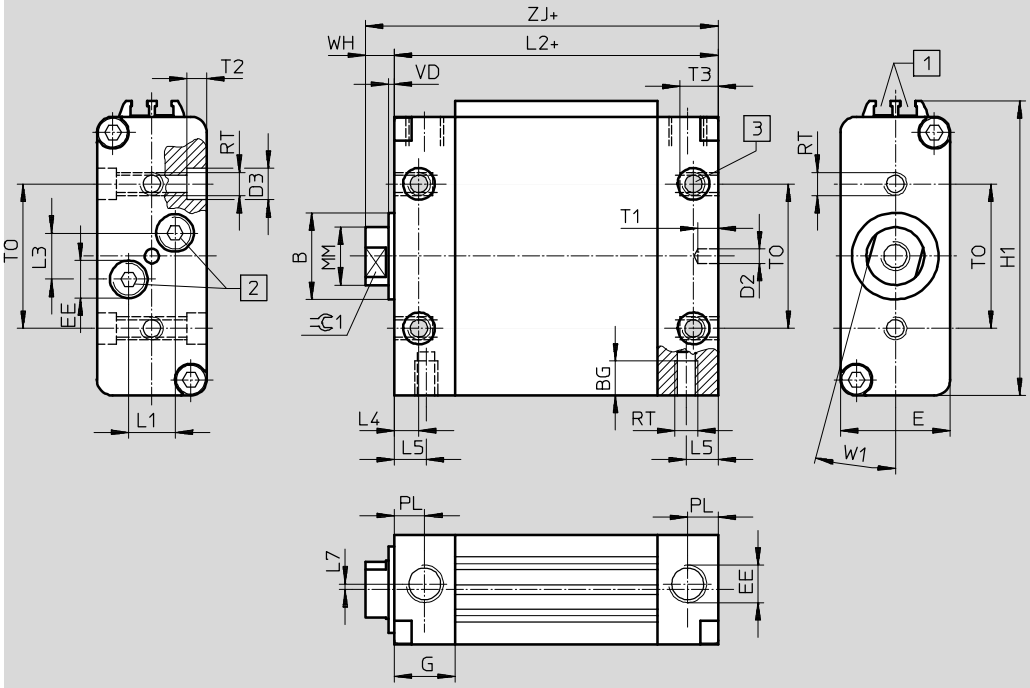


1 Mounting slot for proximity sensors

2 Additional air connections, sealed with blanking plugs

3 Max. tightening torque

\+ = plus stroke length

| ∅ [mm] | B ∅ h9 | BG | D2 ∅ H9 | D3 ∅ | E | EE | G | H1 | L1 | L2 | L3 | L4 | L5 |
|---|---|---|---|---|---|---|---|---|---|---|---|---|---|
| 25 | 16 | 8 | 4 | 8 | 20 | M5 | 12 | 56 | 6 | 62 | 10 | 5 | 5 |
| 32 | 20 | 9 | 4 | 10 | 24 | G1/8 | 17 | 65 | 7.5 | 72 | 14.5 | 8.5 | 8.5 |
| 40 | 25 | 9 | 4 | 10 | 30 | G1/8 | 17 | 82 | 7.5 | 76 | 14.5 | 8.5 | 8.5 |
| 50 | 30 | 12 | 5 | 11 | 38 | G1/4 | 21 | 102 | 16 | 82 | 16 | 8.5 | 8.5 |
| 63 | 30 | 14 | 5 | 15 | 50 | G1/4 | 21 | 126.5 | 21 | 82 | 19 | 8.5 | 8.5 |

| ∅ [mm] | L7 | MM ∅ | PL | RT | T1 | T2 | T3 | TO | VD | W1 ±1 | WH | ZJ | ⊂⊃1 h13 | Max. tightening torque [Nm] +10% |
|---|---|---|---|---|---|---|---|---|---|---|---|---|---|---|
| 25 | – | 10 | 6 | M5 | 7 | 4 | 8 | 25 | 2 | 15° | 8 | 70 | 9 | 4 |
| 32 | 1.5 | 12 | 8.5 | M6 | 7 | 4 | 9 | 32 | 2 | 15° | 8 | 80 | 10 | 9.9 |
| 40 | – | 16 | 8.5 | M6 | 7 | 5 | 9 | 40 | 2 | 15° | 9 | 85 | 13 | 9.9 |
| 50 | – | 20 | 10.5 | M8 | 7 | 6 | 12 | 50 | 2 | 15° | 10 | 92 | 17 | 20 |
| 63 | – | 20 | 10.5 | M10 | 7 | 6 | 14 | 60 | 2 | 15° | 10 | 92 | 17 | 35 |

**Dimensions – Variants** Download CAD data ➔ **www.festo.com**

Female thread

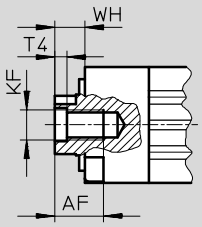


Male thread

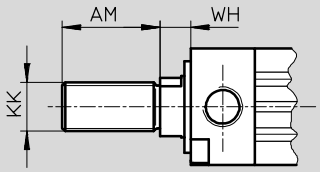


S2 – Through piston rod with female thread

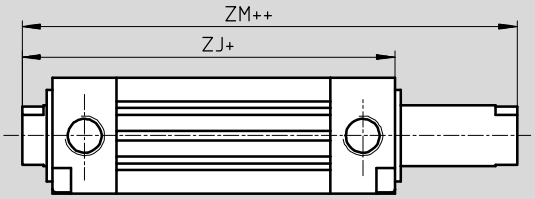


\+ = plus stroke length
++ = plus 2x stroke length

S2 – Through piston rod with male thread

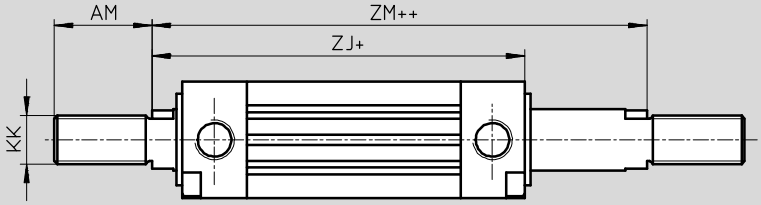


\+ = plus stroke length
++ = plus 2x stroke length

S20 – Through, hollow piston rod

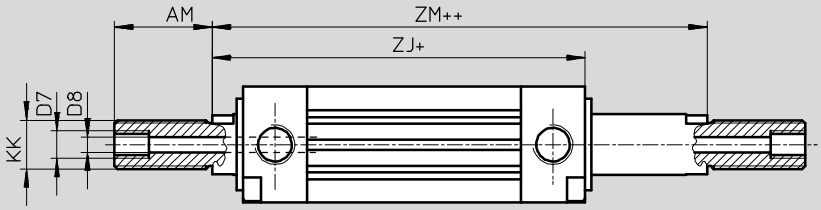


\+ = plus stroke length
++ = plus 2x stroke length

| ∅ [mm] | AF | AM | D7 | D8 ∅ | KF | KK | T4 | WH | ZJ | ZM |
|---|---|---|---|---|---|---|---|---|---|---|
| 12 | 8 | 16 | – | 1.8 | M3 | M6 | 1.5 | 7 | 69 | 76 |
| 18 | 10 | 20 | – | 2.8 | M4 | M8 | 1.5 | 7 | 69 | 76 |
| 25 | 12 | 22 | – | 3.8 | M5 | M10x1.25 | 2 | 8 | 70 | 78 |
| 32 | 14 | 22 | – | 4.5 | M6 | M10x1.25 | 2.6 | 8 | 80 | 88 |
| 40 | 16 | 24 | – | 6 | M8 | M12x1.25 | 3.3 | 9 | 85 | 94 |
| 50 | 20 | 32 | G1/8 | 8 | M10 | M16x1.5 | 4.7 | 10 | 92 | 102 |
| 63 | 20 | 32 | G1/8 | 8 | M10 | M16x1.5 | 4.7 | 10 | 92 | 102 |

| Ordering data | | | | | | |
|---|---|---|---|---|---|---|
| Type | Piston ∅ [mm] | Stroke [mm] | Piston rod with female thread | | Piston rod with male thread | |
| | | | Part No. | Type | Part No. | Type |
| | 12 | 10 | **164003** | **DZF-12-10-P-A** | **161224** | **DZF-12-10-A-P-A** |
| | | 25 | **164004** | **DZF-12-25-P-A** | **161225** | **DZF-12-25-A-P-A** |
| | | 40 | **164005** | **DZF-12-40-P-A** | **161226** | **DZF-12-40-A-P-A** |
| | | 50 | **164006** | **DZF-12-50-P-A** | **161227** | **DZF-12-50-A-P-A** |
| | | 80 | **164007** | **DZF-12-80-P-A** | **161228** | **DZF-12-80-A-P-A** |
| | | 100 | **164008** | **DZF-12-100-P-A** | **161229** | **DZF-12-100-A-P-A** |
| | | 125 | **164009** | **DZF-12-125-P-A** | **161230** | **DZF-12-125-A-P-A** |
| | | 160 | **164010** | **DZF-12-160-P-A** | **161231** | **DZF-12-160-A-P-A** |
| | | 200 | **164011** | **DZF-12-200-P-A** | **161232** | **DZF-12-200-A-P-A** |
| | 18 | 10 | **164015** | **DZF-18-10-P-A** | **161237** | **DZF-18-10-A-P-A** |
| | | 25 | **164016** | **DZF-18-25-P-A** | **161238** | **DZF-18-25-A-P-A** |
| | | 40 | **164017** | **DZF-18-40-P-A** | **161239** | **DZF-18-40-A-P-A** |
| | | 50 | **164018** | **DZF-18-50-P-A** | **161240** | **DZF-18-50-A-P-A** |
| | | 80 | **164019** | **DZF-18-80-P-A** | **161241** | **DZF-18-80-A-P-A** |
| | | 100 | **164020** | **DZF-18-100-P-A** | **161242** | **DZF-18-100-A-P-A** |
| | | 125 | **164021** | **DZF-18-125-P-A** | **161243** | **DZF-18-125-A-P-A** |
| | | 160 | **164022** | **DZF-18-160-P-A** | **161244** | **DZF-18-160-A-P-A** |
| | | 200 | **164023** | **DZF-18-200-P-A** | **161245** | **DZF-18-200-A-P-A** |
| | 25 | 10 | **164027** | **DZF-25-10-P-A** | **161250** | **DZF-25-10-A-P-A**[1] |
| | | 25 | **164028** | **DZF-25-25-P-A** | **161251** | **DZF-25-25-A-P-A**[1] |
| | | 40 | **164029** | **DZF-25-40-P-A** | **161252** | **DZF-25-40-A-P-A**[1] |
| | | 50 | **164030** | **DZF-25-50-P-A** | **161253** | **DZF-25-50-A-P-A**[1] |
| | | 80 | **164031** | **DZF-25-80-P-A** | **161254** | **DZF-25-80-A-P-A**[1] |
| | | 100 | **164032** | **DZF-25-100-P-A** | **161255** | **DZF-25-100-A-P-A**[1] |
| | | 125 | **164033** | **DZF-25-125-P-A** | **161256** | **DZF-25-125-A-P-A**[1] |
| | | 160 | **164034** | **DZF-25-160-P-A** | **161257** | **DZF-25-160-A-P-A**[1] |
| | | 200 | **164035** | **DZF-25-200-P-A** | **161258** | **DZF-25-200-A-P-A**[1] |
| | 32 | 10 | **164039** | **DZF-32-10-P-A** | **161263** | **DZF-32-10-A-P-A**[1] |
| | | 25 | **164040** | **DZF-32-25-P-A** | **161264** | **DZF-32-25-A-P-A**[1] |
| | | 40 | **164041** | **DZF-32-40-P-A** | **161265** | **DZF-32-40-A-P-A**[1] |
| | | 50 | **164042** | **DZF-32-50-P-A** | **161266** | **DZF-32-50-A-P-A**[1] |
| | | 80 | **164043** | **DZF-32-80-P-A** | **161267** | **DZF-32-80-A-P-A**[1] |
| | | 100 | **164044** | **DZF-32-100-P-A** | **161268** | **DZF-32-100-A-P-A**[1] |
| | | 125 | **164045** | **DZF-32-125-P-A** | **161269** | **DZF-32-125-A-P-A**[1] |
| | | 160 | **164046** | **DZF-32-160-P-A** | **161270** | **DZF-32-160-A-P-A**[1] |
| | | 200 | **164047** | **DZF-32-200-P-A** | **161271** | **DZF-32-200-A-P-A**[1] |
| | | 250 | **164048** | **DZF-32-250-P-A** | **161272** | **DZF-32-250-A-P-A**[1] |
| | | 320 | **164049** | **DZF-32-320-P-A** | **161273** | **DZF-32-320-A-P-A**[1] |

1) The scope of delivery includes a hexagonal nut for the piston rod thread

| Ordering data | | | | | | |
|---|---|---|---|---|---|---|
| Type | Piston ∅ [mm] | Stroke [mm] | Piston rod with female thread | | Piston rod with male thread | |
| | | | Part No. | Type | Part No. | Type |
| | 40 | 10 | **164053** | **DZF-40-10-P-A** | **161278** | **DZF-40-10-A-P-A[1)]** |
| | | 25 | **164054** | **DZF-40-25-P-A** | **161279** | **DZF-40-25-A-P-A[1)]** |
| | | 40 | **164055** | **DZF-40-40-P-A** | **161280** | **DZF-40-40-A-P-A[1)]** |
| | | 50 | **164056** | **DZF-40-50-P-A** | **161281** | **DZF-40-50-A-P-A[1)]** |
| | | 80 | **164057** | **DZF-40-80-P-A** | **161282** | **DZF-40-80-A-P-A[1)]** |
| | | 100 | **164058** | **DZF-40-100-P-A** | **161283** | **DZF-40-100-A-P-A[1)]** |
| | | 125 | **164059** | **DZF-40-125-P-A** | **161284** | **DZF-40-125-A-P-A[1)]** |
| | | 160 | **164060** | **DZF-40-160-P-A** | **161285** | **DZF-40-160-A-P-A[1)]** |
| | | 200 | **164061** | **DZF-40-200-P-A** | **161286** | **DZF-40-200-A-P-A[1)]** |
| | | 250 | **164062** | **DZF-40-250-P-A** | **161287** | **DZF-40-250-A-P-A[1)]** |
| | | 320 | **164063** | **DZF-40-320-P-A** | **161288** | **DZF-40-320-A-P-A[1)]** |
| | 50 | 10 | **164067** | **DZF-50-10-P-A** | **161293** | **DZF-50-10-A-P-A[1)]** |
| | | 25 | **164068** | **DZF-50-25-P-A** | **161294** | **DZF-50-25-A-P-A[1)]** |
| | | 40 | **164069** | **DZF-50-40-P-A** | **161295** | **DZF-50-40-A-P-A[1)]** |
| | | 50 | **164070** | **DZF-50-50-P-A** | **161296** | **DZF-50-50-A-P-A[1)]** |
| | | 80 | **164071** | **DZF-50-80-P-A** | **161297** | **DZF-50-80-A-P-A[1)]** |
| | | 100 | **164072** | **DZF-50-100-P-A** | **161298** | **DZF-50-100-A-P-A[1)]** |
| | | 125 | **164073** | **DZF-50-125-P-A** | **161299** | **DZF-50-125-A-P-A[1)]** |
| | | 160 | **164074** | **DZF-50-160-P-A** | **161300** | **DZF-50-160-A-P-A[1)]** |
| | | 200 | **164075** | **DZF-50-200-P-A** | **161301** | **DZF-50-200-A-P-A[1)]** |
| | | 250 | **164076** | **DZF-50-250-P-A** | **161302** | **DZF-50-250-A-P-A[1)]** |
| | | 320 | **164077** | **DZF-50-320-P-A** | **161303** | **DZF-50-320-A-P-A[1)]** |
| | 63 | 10 | **164081** | **DZF-63-10-P-A** | **161308** | **DZF-63-10-A-P-A[1)]** |
| | | 25 | **164082** | **DZF-63-25-P-A** | **161309** | **DZF-63-25-A-P-A[1)]** |
| | | 40 | **164083** | **DZF-63-40-P-A** | **161310** | **DZF-63-40-A-P-A[1)]** |
| | | 50 | **164084** | **DZF-63-50-P-A** | **161311** | **DZF-63-50-A-P-A[1)]** |
| | | 80 | **164085** | **DZF-63-80-P-A** | **161312** | **DZF-63-80-A-P-A[1)]** |
| | | 100 | **164086** | **DZF-63-100-P-A** | **161313** | **DZF-63-100-A-P-A[1)]** |
| | | 125 | **164087** | **DZF-63-125-P-A** | **161314** | **DZF-63-125-A-P-A[1)]** |
| | | 160 | **164088** | **DZF-63-160-P-A** | **161315** | **DZF-63-160-A-P-A[1)]** |
| | | 200 | **164089** | **DZF-63-200-P-A** | **161316** | **DZF-63-200-A-P-A[1)]** |
| | | 250 | **164090** | **DZF-63-250-P-A** | **161317** | **DZF-63-250-A-P-A[1)]** |
| | | 320 | **164091** | **DZF-63-320-P-A** | **161318** | **DZF-63-320-A-P-A[1)]** |

1) The scope of delivery includes a hexagonal nut for the piston rod thread

| Ordering data – Variants | | | | | | |
|---|---|---|---|---|---|---|
| Type | Piston ∅ [mm] | Stroke [mm] | Piston rod with female thread | | Piston rod with male thread | |
| | | | Part No. | Type | Part No. | Type |
| Variable stroke | | | | | | |
| | 12 | 1 … 200 | **164000** | **DZF-12-…-P-A** | **161220** | **DZF-12-…-A-P-A** |
| | 18 | 1 … 200 | **164012** | **DZF-18-…-P-A** | **161233** | **DZF-18-…-A-P-A** |
| | 25 | 1 … 200 | **164024** | **DZF-25-…-P-A** | **161246** | **DZF-25-…-A-P-A[1)]** |
| | 32 | 1 … 320 | **164036** | **DZF-32-…-P-A** | **161259** | **DZF-32-…-A-P-A[1)]** |
| | 40 | 1 … 320 | **164050** | **DZF-40-…-P-A** | **161274** | **DZF-40-…-A-P-A[1)]** |
| | 50 | 1 … 320 | **164064** | **DZF-50-…-P-A** | **161289** | **DZF-50-…-A-P-A[1)]** |
| | 63 | 1 … 320 | **164078** | **DZF-63-…-P-A** | **161304** | **DZF-63-…-A-P-A[1)]** |
| S2 – Through piston rod | | | | | | |
| | 12 | 1 … 200 | **164001** | **DZF-12-…-P-A-S2** | **161221** | **DZF-12-…-A-P-A-S2** |
| | 18 | 1 … 200 | **164013** | **DZF-18-…-P-A-S2** | **161234** | **DZF-18-…-A-P-A-S2** |
| | 25 | 1 … 200 | **164025** | **DZF-25-…-P-A-S2** | **161247** | **DZF-25-…-A-P-A-S2[1)]** |
| | 32 | 1 … 320 | **164037** | **DZF-32-…-P-A-S2** | **161260** | **DZF-32-…-A-P-A-S2[1)]** |
| | 40 | 1 … 320 | **164051** | **DZF-40-…-P-A-S2** | **161275** | **DZF-40-…-A-P-A-S2[1)]** |
| | 50 | 1 … 320 | **164065** | **DZF-50-…-P-A-S2** | **161290** | **DZF-50-…-A-P-A-S2[1)]** |
| | 63 | 1 … 320 | **164079** | **DZF-63-…-P-A-S2** | **161305** | **DZF-63-…-A-P-A-S2[1)]** |
| S6 – Heat resistant seals up to 120 °C | | | | | | |
| | 12 | 1 … 200 | **164002** | **DZF-12-…-P-A-S6** | **161223** | **DZF-12-…-A-P-A-S6** |
| | 18 | 1 … 200 | **164014** | **DZF-18-…-P-A-S6** | **161236** | **DZF-18-…-A-P-A-S6** |
| | 25 | 1 … 200 | **164026** | **DZF-25-…-P-A-S6** | **161249** | **DZF-25-…-A-P-A-S6[1)]** |
| | 32 | 1 … 320 | **164038** | **DZF-32-…-P-A-S6** | **161262** | **DZF-32-…-A-P-A-S6[1)]** |
| | 40 | 1 … 320 | **164052** | **DZF-40-…-P-A-S6** | **161277** | **DZF-40-…-A-P-A-S6[1)]** |
| | 50 | 1 … 320 | **164066** | **DZF-50-…-P-A-S6** | **161292** | **DZF-50-…-A-P-A-S6[1)]** |
| | 63 | 1 … 320 | **164080** | **DZF-63-…-P-A-S6** | **161307** | **DZF-63-…-A-P-A-S6[1)]** |
| S20 – Through, hollow piston rod | | | | | | |
| | 12 | 1 … 200 | – | – | **161222** | **DZF-12-…-A-P-A-S20** |
| | 18 | 1 … 200 | | | **161235** | **DZF-18-…-A-P-A-S20** |
| | 25 | 1 … 200 | | | **161248** | **DZF-25-…-A-P-A-S20[1)]** |
| | 32 | 1 … 320 | | | **161261** | **DZF-32-…-A-P-A-S20[1)]** |
| | 40 | 1 … 320 | | | **161276** | **DZF-40-…-A-P-A-S20[1)]** |
| | 50 | 1 … 320 | | | **161291** | **DZF-50-…-A-P-A-S20[1)]** |
| | 63 | 1 … 320 | | | **161306** | **DZF-63-…-A-P-A-S20[1)]** |

1) The scope of delivery includes a hexagonal nut for the piston rod thread

### Foot mounting HZF

Material:
Steel

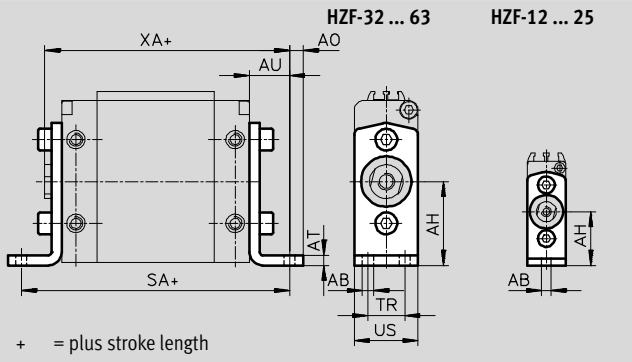


| Dimensions and ordering data | | | | | | | | | | | | | |
|---|---|---|---|---|---|---|---|---|---|---|---|---|---|
| For ∅ | AB ∅ | AH | AO | AT | AU | SA | TR | US | XA | CRC[1] | Weight [g] | Part No. | Type |
| 12 | 4.5 | 25 | 5 | 2 | 13 | 88 | – | 14 | 82 | 1 | 21 | **161804** | **HZF-12** |
| 18 | 5.5 | 29 | 5 | 2 | 17 | 96 | – | 16 | 86 | 1 | 30 | **161805** | **HZF-18** |
| 25 | 5.5 | 28 | 6 | 3 | 16 | 94 | – | 20 | 86 | 1 | 58 | **161806** | **HZF-25** |
| 32 | 5.5 | 32 | 5.5 | 3 | 18 | 108 | 13 | 24 | 98 | 1 | 82 | **161807** | **HZF-32** |
| 40 | 5.5 | 40 | 7 | 4 | 20 | 116 | 16 | 30 | 105 | 1 | 142 | **161808** | **HZF-40** |
| 50 | 6.6 | 50 | 8 | 4 | 24 | 130 | 22 | 38 | 116 | 1 | 249 | **161809** | **HZF-50** |
| 63 | 9 | 63 | 10 | 4 | 27 | 136 | 30 | 50 | 119 | 1 | 436 | **161810** | **HZF-63** |

1) Corrosion resistance class CRC 1 to Festo standard FN 940070
Low corrosion stress. For dry indoor applications or transport and storage protection. Also applies to parts behind covers, in the non-visible interior area, and parts which are covered in the application (e.g. drive trunnions).

### Flange mounting FZF

Material:
Wrought aluminium alloy

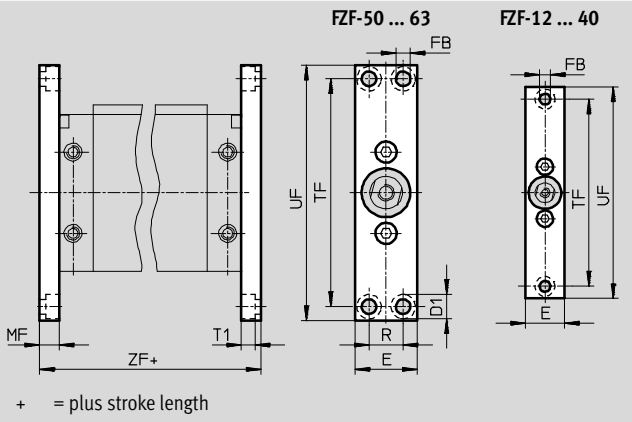


| Dimensions and ordering data | | | | | | | | | | | | | |
|---|---|---|---|---|---|---|---|---|---|---|---|---|---|
| For ∅ | D1 ∅ | E | FB ∅ | MF | R | T1 | TF | UF | ZF | CRC[1] | Weight [g] | Part No. | Type |
| 12 | 8 | 14 | 4.5 | 8 | – | 4.5 | 75 | 90 | 78 | 2 | 23 | **161811** | **FZF-12** |
| 18 | 8 | 16 | 4.5 | 8 | – | 4.5 | 80 | 94 | 78 | 2 | 28 | **161812** | **FZF-18** |
| 25 | 10 | 20 | 5.5 | 10 | – | 5.7 | 100 | 112 | 82 | 2 | 56 | **161813** | **FZF-25** |
| 32 | 11 | 24 | 6.6 | 10 | – | 6.5 | 115 | 130 | 92 | 2 | 78 | **161814** | **FZF-32** |
| 40 | 11 | 30 | 6.6 | 10 | – | 6.3 | 132 | 146 | 96 | 2 | 109 | **161815** | **FZF-40** |
| 50 | 15 | 38 | 9 | 12 | 21 | 8.3 | 140 | 157 | 106 | 2 | 167 | **161816** | **FZF-50** |
| 63 | 15 | 50 | 9 | 15 | 33 | 8.3 | 140 | 157 | 112 | 2 | 299 | **161817** | **FZF-63** |

1) Corrosion resistance class CRC 2 to Festo standard FN 940070
Moderate corrosion stress. Indoor applications in which condensation may occur. External visible parts with primarily decorative requirements for the surface and which are in direct contact with the ambient atmosphere typical for industrial applications.

## Swivel flange SZF

Material:
High-alloy steel

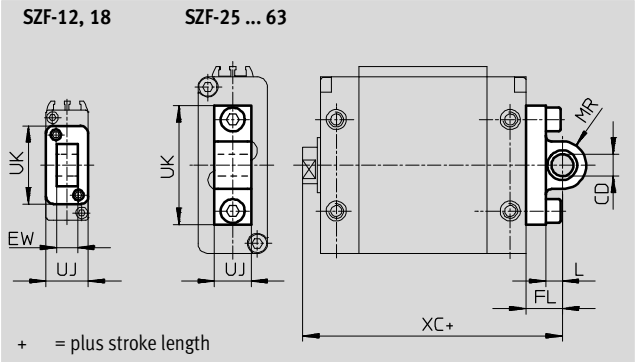


| Dimensions and ordering data | | | | | | | | | | | | |
|---|---|---|---|---|---|---|---|---|---|---|---|---|
| For ∅ | CD ∅ H9 | EW h12 | FL | L | MR | UJ | UK | XC | CRC[1] | Weight [g] | Part No. | Type |
| 12 | 8 | 7 | 16 | 13 | 7 | 14 | 26 | 85 | 2 | 20 | **161818** | **SZF-12** |
| 18 | 8 | 7 | 18 | 15 | 7 | 16 | 26 | 87 | 2 | 25 | **161819** | **SZF-18** |
| 25 | 8 | – | 14 | 8 | 7.5 | 9 | 37 | 84 | 2 | 25 | **161820** | **SZF-25** |
| 32 | 10 | – | 15 | 6 | 10 | 10.5 | 44 | 95 | 2 | 45 | **161821** | **SZF-32** |
| 40 | 12 | – | 18 | 9 | 13 | 10.5 | 52 | 103 | 2 | 65 | **161822** | **SZF-40** |
| 50 | 12 | – | 20 | 9 | 13 | 20 | 65 | 112 | 2 | 175 | **161823** | **SZF-50** |
| 63 | 16 | – | 24 | 13 | 17 | 25 | 78 | 116 | 2 | 255 | **161824** | **SZF-63** |

1) Corrosion resistance class CRC 2 to Festo standard FN 940070
Moderate corrosion stress. Indoor applications in which condensation may occur. External visible parts with primarily decorative requirements for the surface and which are in direct contact with the ambient atmosphere typical for industrial applications.

## Clevis foot LZF

Material:
Steel

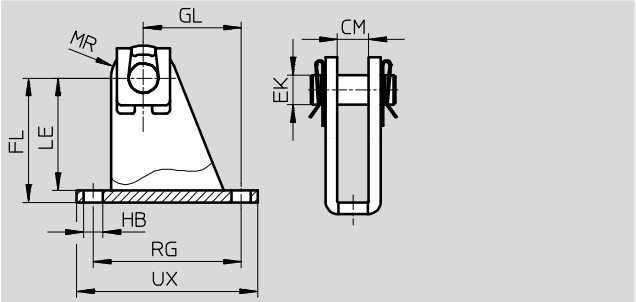


| Dimensions and ordering data | | | | | | | | | | | | |
|---|---|---|---|---|---|---|---|---|---|---|---|---|
| For ∅ | CM | EK ∅ H8 | FL | GL | HB ∅ | LE | MR | RG | UX | Weight [g] | Part No. | Type |
| 12 | $7.1_{+0.4}$ | 8 | $32_{+0.4/-0.2}$ | 18 | 4.5 | 29 | 8 | 30 | 37 | 45 | **163962** | **LZF-12/18** |
| 18 | $7.1_{+0.4}$ | 8 | $32_{+0.4/-0.2}$ | 18 | 4.5 | 29 | 8 | 30 | 37 | 45 | **163962** | **LZF-12/18** |
| 25 | $9.1_{+0.4}$ | 8 | $35_{+0.4/-0.2}$ | 25.5 | 5.5 | 32 | 9.5 | 40 | 49 | 64 | **163963** | **LZF-25** |
| 32 | $10.6_{+0.4}$ | 10 | $42_{+0.4/-0.2}$ | 33 | 6.6 | 38 | 11 | 50 | 60 | 123 | **163964** | **LZF-32** |
| 40 | $10.6_{+0.4}$ | 12 | $51_{+0.4/-0.2}$ | 29.5 | 6.6 | 47 | 14 | 50 | 60 | 163 | **163965** | **LZF-40** |
| 50 | $20.1_{+0.5}$ | 12 | $55_{+0.6/-0.2}$ | 24 | 9 | 50 | 14 | 30 | 46 | 246 | **163966** | **LZF-50** |
| 63 | $25.1_{+0.5}$ | 16 | $68_{+0.6/-0.2}$ | 32 | 11 | 63 | 18 | 40 | 60 | 413 | **163967** | **LZF-63** |

**Ordering data – Mounting attachments**

Technical data ➔ Internet: clevis foot

| Designation | For ∅ | Part No. | Type |
|---|---|---|---|
| Clevis foot LBG | | | |
| 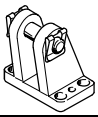 | 32 | **31761** | **LBG-32** |
| | 40 | **31762** | **LBG-40** |
| | 50 | **31763** | **LBG-50** |
| | 63 | **31764** | **LBG-63** |

| Designation | For ∅ | Part No. | Type |
|---|---|---|---|
| Right-angle clevis foot LQG | | | |
| 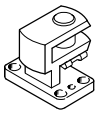 | 32 | **31768** | **LQG-32** |
| | 40 | **31769** | **LQG-40** |
| | 50 | **31770** | **LQG-50** |
| | 63 | **31771** | **LQG-63** |

**Ordering data – Piston rod attachments**

Technical data ➔ Internet: piston-rod attachment

| Designation | For ∅ | Part No. | Type |
|---|---|---|---|
| Rod eye SGS | | | |
| | 12 | **9254** | **SGS-M6** |
| | 18 | **9255** | **SGS-M8** |
| | 25 | **9261** | **SGS-M10x1,25** |
| | 32 | | |
| | 40 | **9262** | **SGS-M12x1,25** |
| | 50 | **9263** | **SGS-M16x1,5** |
| | 63 | | |
| Rod clevis SG | | | |
| | 12 | **3110** | **SG-M6** |
| | 18 | **3111** | **SG-M8** |
| | 25 | **6144** | **SG-M10x1,25** |
| | 32 | | |
| | 40 | **6145** | **SG-M12x1,25** |
| | 50 | **6146** | **SG-M16x1,5** |
| | 63 | | |
| Coupling piece KSZ | | | |
| 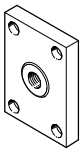 | 12 | **36123** | **KSZ-M6** |
| | 18 | **36124** | **KSZ-M8** |
| | 25 | **36125** | **KSZ-M10x1,25** |
| | 32 | | |
| | 40 | **36126** | **KSZ-M12x1,25** |
| | 50 | **36127** | **KSZ-M16x1,5** |
| | 63 | | |

| Designation | For ∅ | Part No. | Type |
|---|---|---|---|
| Rod clevis SGA | | | |
| | 12 | – | – |
| | 18 | – | – |
| | 25 | **32954** | **SGA-M10x1,25** |
| | 32 | | |
| | 40 | **10767** | **SGA-M12x1,25** |
| | 50 | **10768** | **SGA-M16x1,5** |
| | 63 | | |
| Self-aligning rod coupler FK | | | |
| | 12 | **2061** | **FK-M6** |
| | 18 | **2062** | **FK-M8** |
| | 25 | **6140** | **FK-M10x1,25** |
| | 32 | | |
| | 40 | **6141** | **FK-M12x1,25** |
| | 50 | **6142** | **FK-M16x1,5** |
| | 63 | | |
| Adapter AD | | | |
| | 12 | **157328** | **AD-M6-M5** |
| | | **157329** | **AD-M6-1/8** |
| | | **157330** | **AD-M6-1/4** |
| | 18 | **157331** | **AD-M8-1/8** |
| | | **157332** | **AD-M8-1/4** |
| | 25 | **157333** | **AD-M10x1,25-1/8** |
| | 32 | **157334** | **AD-M10x1,25-1/4** |
| | 40 | **160256** | **AD-M12x1,25-1/4** |
| | | **160257** | **AD-M12x1,25-3/8** |

# Flat cylinders DZH

Peripherals overview

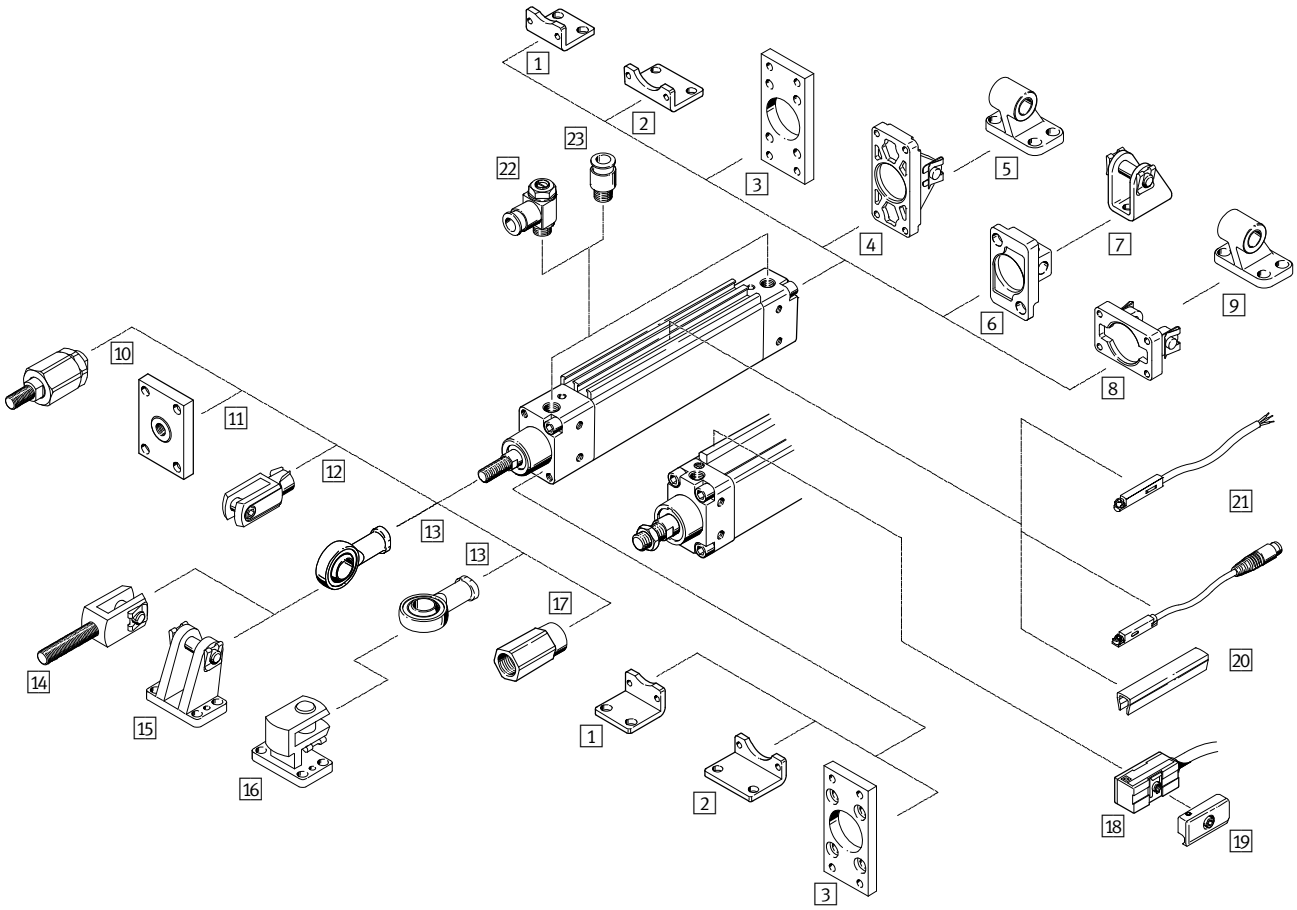

| Mounting attachments and accessories | | | | | |
|---|---|---|---|---|---|
| | Description | Piston ∅ 16 … 20 | Piston ∅ 25 | Piston ∅ 32 … 63 | ➔ Page/Internet |
| 1 Foot mounting, narrow HZS | for bearing and end caps | ■ | ■ | ■ | 31 |
| 2 Foot mounting, wide HZB | for bearing and end caps | ■ | ■ | ■ | 32 |
| 3 Flange mounting FZS | for bearing and end caps | ■ | ■ | ■ | 31 |
| 4 Swivel flange, narrow SZS | for end caps | – | – | ■ | 33 |
| 5 Clevis foot LBZB/LBZS | – | – | – | ■ | 34 |
| 6 Swivel flange, narrow SZSB | for end caps | ■ | ■ | – | 32 |
| 7 Clevis foot LBN | – | ■ | ■ | – | 35 |
| 8 Swivel flange, wide SZB | for end caps | – | – | ■ | 33 |
| 9 Clevis foot LN | – | – | – | ■ | 35 |
| 10 Self-aligning rod coupler FK | for compensating radial and angular deviations | ■ | ■ | ■ | 35 |
| 11 Coupling piece KSZ | for cylinders with a non-rotating piston rod to compensate for radial deviations | ■ | ■ | ■ | 35 |
| 12 Rod clevis SG | permits a swivelling movement of the cylinder in one plane | ■ | ■ | ■ | 35 |
| 13 Rod eye SGS | with spherical bearing | ■ | ■ | ■ | 35 |
| 14 Rod clevis SGA | with male thread | ■ | ■ | ■ | 35 |
| 15 Clevis foot LBG | – | ■ | ■ | ■ | 35 |
| 16 Right-angle clevis foot LQG | – | ■ | ■ | ■ | 35 |
| 17 Adapter AD | for the vacuum generator | ■ S20 | ■ S20 | – | 35 |
| 18 Proximity sensors SMEO-1/SMTO-1/SMPO-1 | – | – | – | ■ | 36 |
| 19 Mounting kit SMB-1 | – | – | – | ■ | 36 |
| 20 Slot cover ABP-5-S | to protect the sensor cable and keep dirt out of the sensor slots | ■ | ■ | – | 37 |
| 21 Proximity sensors SME/SMT-8 | can be integrated in the cylinder profile barrel | ■ | ■ | – | 37 |
| 22 One-way flow control valve GRLA/GRLZ | to regulate speed | ■ | ■ | ■ | 38 |
| 23 Push-in fitting QS | for connecting compressed air tubing with standard external diameters | ■ | ■ | ■ | qs |

# Flat cylinders DZH

Type codes

| DZH | – | 16 | – | 40 | – | PPV | – | A | – | |
|---|---|---|---|---|---|---|---|---|---|---|

| Type | |
|---|---|
| Double-acting | |
| DZH | Flat cylinder |

| Piston ∅ [mm] |
|---|

| Stroke [mm] |
|---|

| Cushioning | |
|---|---|
| PPV | Pneumatic cushioning adjustable at both ends |

| Position sensing | |
|---|---|
| A | For proximity sensing |

| Variant | |
|---|---|
| S2 | Through piston rod |
| S6 | Heat resistant seals up to 120 °C |
| S20 | Through, hollow piston rod |

# Flat cylinders DZH

Technical data

Function

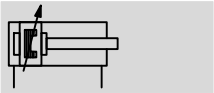

- Diameter
  16 … 63
- Stroke length
  1 … 1000
- www.festo.com

Wearing parts kits
➔ page 30

Variants

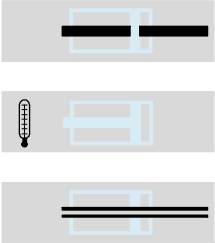

S2

S6

S20

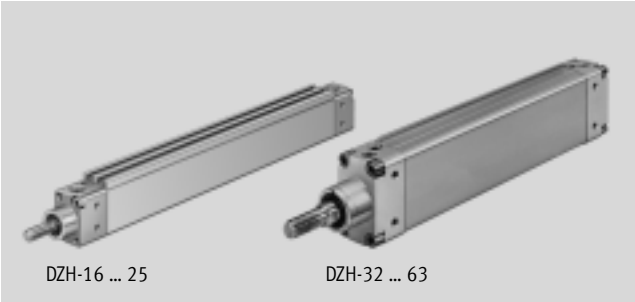


| General technical data | | | | | | | |
|---|---|---|---|---|---|---|---|
| Piston ∅ | 16 | 20 | 25 | 32 | 40 | 50 | 63 |
| Pneumatic connection | M5 | G1/8 | G1/8 | G1/8 | G1/4 | G1/4 | G3/8 |
| End of piston rod Male thread | M6 | M8 | M10x1.25 | M10x1.25 | M12x1.25 | M16x1.5 | M16x1.5 |
| Constructional design | Piston, piston rod | | | | | | |
| Protection against torsion/guide | Oval piston | | | | | | |
| Cushioning | Pneumatic cushioning adjustable at both ends | | | | | | |
| Cushioning length [mm] | 14 | 17 | 17 | 19 | 21 | 23 | 23 |
| Position sensing | For proximity sensing | | | | | | |
| Type of mounting | With female thread | | | | | | |
| | With accessories | | | | | | |
| Mounting position | Any | | | | | | |

| Operating pressure [bar] | | | | | | | |
|---|---|---|---|---|---|---|---|
| Piston ∅ | 16 | 20 | 25 | 32 | 40 | 50 | 63 |
| | 1.0 … 10 | | | 0.6 … 10 | | | |

| Ambient conditions | | |
|---|---|---|
| Flat cylinder | DZH-… | DZH-…-S6 |
| Operating medium | Compressed air in accordance with ISO 8573-1:2010 [7:4:4] | |
| Note on operating/pilot medium | Operation with lubricated medium possible (in which case lubricated operation will always be required) | |
| Ambient temperature[1] [°C] | −20 … +80 | 0 … +120 |
| Corrosion resistance class CRC[2] | 2 | 2 |

1) Observe operating range of proximity sensors
2) Corrosion resistance class CRC 2 to Festo standard FN 940070
Moderate corrosion stress. Indoor applications in which condensation may occur. External visible parts with primarily decorative requirements for the surface and which are in direct contact with the ambient atmosphere typical for industrial applications.

- Note

Sizing software
ProPneu
➔www.festo.com

| Forces [N] and torques [Nm] | | | | | | | | |
|---|---|---|---|---|---|---|---|---|
| Piston ∅ | | 16 | 20 | 25 | 32 | 40 | 50 | 63 |
| Theoretical force at 6 bar, advancing | | 121 | 188 | 295 | 483 | 754 | 1178 | 1870 |
| | S2/S20 | 104 | 158 | 247 | 415 | 633 | 989 | 1682 |
| Theoretical force at 6 bar, retracting | | 104 | 158 | 247 | 415 | 633 | 989 | 1682 |
| | S2/S20 | 104 | 158 | 247 | 415 | 633 | 989 | 1682 |
| Max. torque at the piston rod[1)] | | 0.5 | 0.6 | 0.8 | 1.0 | 1.2 | 1.7 | 2.0 |

1) The max. torque must also be observed when fitting mounting attachments to the piston rod

| Weights [g] | | | | | | | |
|---|---|---|---|---|---|---|---|
| Piston ∅ | 16 | 20 | 25 | 32 | 40 | 50 | 63 |
| Product weight at 0 mm stroke | 140 | 230 | 330 | 500 | 820 | 1200 | 1690 |
| Additional weight per 10 mm stroke | 11 | 15 | 21 | 30 | 40 | 60 | 80 |

| Minimum stroke length [mm] for contactless position sensing with one proximity sensor | | | | |
|---|---|---|---|---|
| Piston ∅ | 32 | 40 | 50 | 63 |
| SMEO-1/SMTO-1 | | | | |
| Plug | 10 | | | |
| Cable | | | | |

| Minimum stroke length [mm] for contactless position sensing with two proximity sensors | | | | | |
|---|---|---|---|---|---|
| Piston ∅ | | 32 | 40 | 50 | 63 |
| SMEO-1 | | | | | |
| Plug | outlet towards caps | 86 | 87 | 90 | 91 |
| | outlet towards center | 46 | 48 | 49 | 50 |
| Cable | outlet towards caps | 63 | 64 | 67 | 68 |
| | outlet towards center | 48 | 50 | 51 | 53 |
| | | | | | |
| SMTO-1 | | | | | |
| Plug | outlet towards caps | 105 | 107 | 106 | 107 |
| | outlet towards center | not possible as the plug would cover the pneumatic port | | | |
| Cable | outlet towards caps | 82 | 84 | 85 | 86 |
| | outlet towards center | 19 | 21 | 20 | 22 |

## Materials

Sectional view

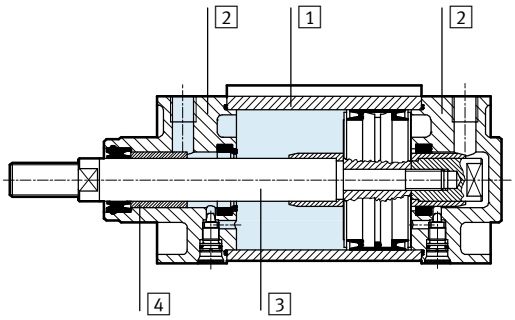


| Flat cylinder | | | DZH-... | DZH-...-S6 |
|---|---|---|---|---|
| 1 | Cylinder barrel | | Anodised aluminium | Anodised aluminium |
| 2 | Bearing end cap | | Aluminium | Aluminium |
| 3 | Piston rod | ∅ 16 ... 25 | Stainless steel | Stainless steel |
| | | ∅ 32 ... 63 | High-alloy steel | High-alloy steel |
| 4 | Dynamic seals | | Polyurethane | Fluorocarbon rubber |
| | Note on materials | | RoHS-compliant | |

**Dimensions** Download CAD data ➔ **www.festo.com**

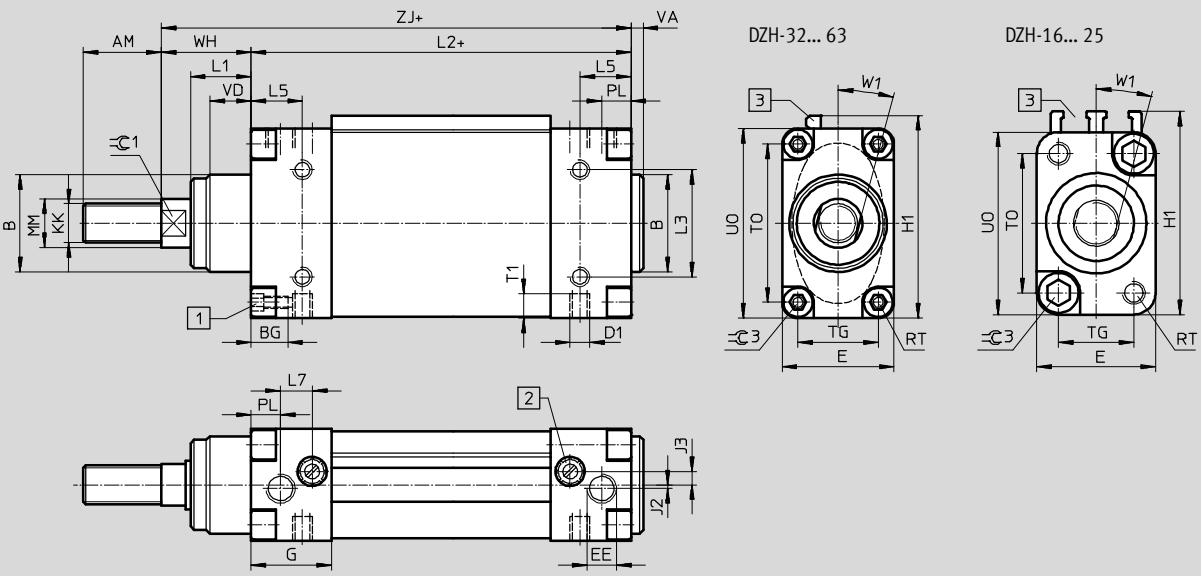


1 Socket head screw with female thread

2 Regulating screw for adjustable end-position cushioning

3 ∅ 16 ... 25:
Mounting slot for proximity sensors
∅ 32 ... 63:
Mounting rail for proximity sensor

\+ = plus stroke length

| ∅ [mm] | AM | B ∅ f10 | BG | D1 | D8 ∅ | E | EE | G | H1 | J2 | J3 | KK | L1 | L2 | L3 | L5 |
|---|---|---|---|---|---|---|---|---|---|---|---|---|---|---|---|---|
| 16 | 16 | 16 | 5.5 | M4 | 2.3 | 20 | M5 | 20.5 | 35.5 | –0.7 | 2.8 | M6 | 12 | 78.5 ±0.5 | 12 | 12 |
| 20 | 20 | 20 | 5.5 | M4 | 3.2 | 23 | G1/8 | 25 | 39.5 | –0.7 | 5 | M8 | 14 | 90.5 ±0.5 | 15 | 15 |
| 25 | 22 | 22 | 7 | M5 | 3.8 | 26 | G1/8 | 26 | 44.5 | –0.3 | 4.2 | M10x1.25 | 14 | 92.5 ±0.5 | 18 | 16 |
| 32 | 22 | 30 | 13 | M6 | – | 36 | G1/8 | 27 | 53.3 | – | 3 | M10x1.25 | 16 | 94 ±0.7 | 18 | 13 |
| 40 | 24 | 35 | 13 | M6 | – | 40 | G1/4 | 33 | 66.3 | – | 6 | M12x1.25 | 20 | 105 ±0.7 | 32 | 16.5 |
| 50 | 32 | 40 | 15 | M8 | – | 46 | G1/4 | 32.5 | 82.3 | 2.5 | 3 | M16x1.5 | 25 | 106 ±0.7 | 44 | 21 |
| 63 | 32 | 42 | 15 | M10 | – | 54 | G3/8 | 36.5 | 108.3 | 4 | 5 | M16x1.5 | 28 | 115 ±0.7 | 64 | 22.5 |

| ∅ [mm] | L7 | MM ∅ | PL | RT | T1 | TG | TO | UO | VA | VD | WH ±1 | W1 | ZJ | ZM | ⌯1 | ⌯3 |
|---|---|---|---|---|---|---|---|---|---|---|---|---|---|---|---|---|
| 16 | 8.5 | 6 | 7.5 | M4 | 5.5 | 12 | 23 | 31 | 2.5 | 12 | 17.5 | 15° | 96 | 114.4 ±0.4 | 5 | 4 |
| 20 | 10.5 | 8 | 9.3 | M4 | 5.5 | 15 | 27 | 35 | 2.5 | 14 | 18.5 | 15° | 109 | 128 ±0.4 | 7 | 4 |
| 25 | 10 | 10 | 10.5 | M5 | 7 | 16.5 | 30.5 | 40 | 2.5 | 14 | 20.5 | 15° | 113 | 134 ±0.4 | 9 | 5 |
| 32 | 10.2 | 12 | 9 | M5 | 9 | 24.5 | 36.5 | 48 | 4 | 16 | 26 | 15° | 120 | 147.1 ±0.5 | 10 | 6 |
| 40 | 13.2 | 16 | 11 | M5 | 9 | 28 | 50 | 62 | 5.5 | 20 | 30 | 15° | 135 | 165.3 ±0.5 | 13 | 6 |
| 50 | 14 | 20 | 10.5 | M6 | 10 | 33 | 65 | 78 | 5 | 17 | 37.5 | 15° | 143.5 | 181.5 ±0.5 | 17 | 6 |
| 63 | 14.5 | 20 | 12.5 | M6 | 12 | 40 | 90 | 104 | 6 | 20 | 40 | 15° | 155 | 195.3 ±0.5 | 17 | 6 |

Note

The maximum permissible torque must not be exceeded when additional components are screwed onto the piston rod. Counterhold by means of the spanner flats ⌯1.

**Dimensions** Download CAD data ➔ **www.festo.com**

Variant S2 – Through piston rod, S20 – Through, hollow piston rod

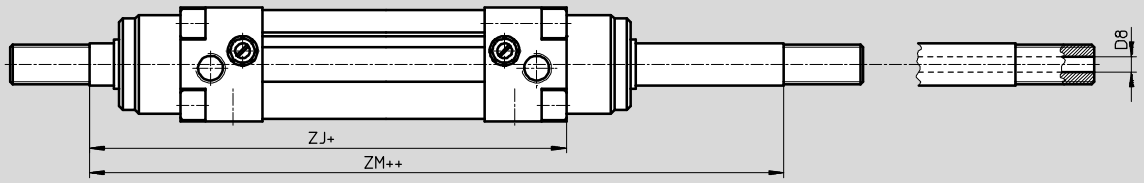


+ = plus stroke length ++ = plus 2x stroke length

| ∅ [mm] | D8 ∅ | ZJ | ZM |
|---|---|---|---|
| 16 | 2,3 | 96 | 114,4 ±0,4 |
| 20 | 3,2 | 109 | 128 ±0,4 |
| 25 | 3,8 | 113 | 134 ±0,4 |
| 32 | – | 120 | 147,1 ±0,5 |
| 40 | – | 135 | 165,3 ±0,5 |
| 50 | – | 143,5 | 181,5 ±0,5 |
| 63 | – | 155 | 195,3 ±0,5 |

**Ordering data**

| Type | Stroke [mm] | Part No. | Type | Stroke [mm] | Part No. | Type |
|---|---|---|---|---|---|---|
| | Piston ∅ 16 mm | | | Piston ∅ 20 mm | | |
| | 25 | **151145** | **DZH-16-25-PPV-A** | 25 | **151134** | **DZH-20-25-PPV-A** |
| | 40 | **151146** | **DZH-16-40-PPV-A** | 40 | **151135** | **DZH-20-40-PPV-A** |
| | 50 | **151147** | **DZH-16-50-PPV-A** | 50 | **151136** | **DZH-20-50-PPV-A** |
| | 80 | **151148** | **DZH-16-80-PPV-A** | 80 | **151137** | **DZH-20-80-PPV-A** |
| | 100 | **151149** | **DZH-16-100-PPV-A** | 100 | **151138** | **DZH-20-100-PPV-A** |
| | 125 | **151150** | **DZH-16-125-PPV-A** | 125 | **151139** | **DZH-20-125-PPV-A** |
| | 160 | **151151** | **DZH-16-160-PPV-A** | 160 | **151140** | **DZH-20-160-PPV-A** |
| | 200 | **151152** | **DZH-16-200-PPV-A** | 200 | **151141** | **DZH-20-200-PPV-A** |
| | 250 | – | – | 250 | **151142** | **DZH-20-250-PPV-A** |
| | 300 | – | – | 300 | – | – |
| | 320 | – | – | 320 | **151143** | **DZH-20-320-PPV-A** |
| | Piston ∅ 25 mm | | | Piston ∅ 32 mm | | |
| | 25 | **151121** | **DZH-25-25-PPV-A**[1] | 25 | **14041** | **DZH-32-25-PPV-A**[1] |
| | 40 | **151122** | **DZH-25-40-PPV-A**[1] | 40 | **14042** | **DZH-32-40-PPV-A**[1] |
| | 50 | **151123** | **DZH-25-50-PPV-A**[1] | 50 | **14043** | **DZH-32-50-PPV-A**[1] |
| | 80 | **151124** | **DZH-25-80-PPV-A**[1] | 80 | **14044** | **DZH-32-80-PPV-A**[1] |
| | 100 | **151125** | **DZH-25-100-PPV-A**[1] | 100 | **14045** | **DZH-32-100-PPV-A**[1] |
| | 125 | **151126** | **DZH-25-125-PPV-A**[1] | 125 | **14046** | **DZH-32-125-PPV-A**[1] |
| | 160 | **151127** | **DZH-25-160-PPV-A**[1] | 160 | **14047** | **DZH-32-160-PPV-A**[1] |
| | 200 | **151128** | **DZH-25-200-PPV-A**[1] | 200 | **14048** | **DZH-32-200-PPV-A**[1] |
| | 250 | **151129** | **DZH-25-250-PPV-A**[1] | 250 | **14049** | **DZH-32-250-PPV-A**[1] |
| | 300 | – | – | 300 | **14050** | **DZH-32-300-PPV-A**[1] |
| | 320 | **151130** | **DZH-25-320-PPV-A**[1] | 320 | – | – |
| | 400 | **151131** | **DZH-25-400-PPV-A**[1] | 400 | – | – |
| | 500 | **151132** | **DZH-25-500-PPV-A**[1] | 500 | – | – |
| | Piston ∅ 40 mm | | | Piston ∅ 50 mm | | |
| | 25 | **14052** | **DZH-40-25-PPV-A**[1] | 25 | **14063** | **DZH-50-25-PPV-A**[1] |
| | 40 | **14053** | **DZH-40-40-PPV-A**[1] | 40 | **14064** | **DZH-50-40-PPV-A**[1] |
| | 50 | **14054** | **DZH-40-50-PPV-A**[1] | 50 | **14065** | **DZH-50-50-PPV-A**[1] |
| | 80 | **14055** | **DZH-40-80-PPV-A**[1] | 80 | **14066** | **DZH-50-80-PPV-A**[1] |
| | 100 | **14056** | **DZH-40-100-PPV-A**[1] | 100 | **14067** | **DZH-50-100-PPV-A**[1] |
| | 125 | **14057** | **DZH-40-125-PPV-A**[1] | 125 | **14068** | **DZH-50-125-PPV-A**[1] |
| | 160 | **14058** | **DZH-40-160-PPV-A**[1] | 160 | **14069** | **DZH-50-160-PPV-A**[1] |
| | 200 | **14059** | **DZH-40-200-PPV-A**[1] | 200 | **14070** | **DZH-50-200-PPV-A**[1] |
| | 250 | **14060** | **DZH-40-250-PPV-A**[1] | 250 | **14071** | **DZH-50-250-PPV-A**[1] |
| | 300 | **14061** | **DZH-40-300-PPV-A**[1] | 300 | **14072** | **DZH-50-300-PPV-A**[1] |
| | Piston ∅ 63 mm | | | | | |
| | 25 | **14074** | **DZH-63-25-PPV-A**[1] | | | |
| | 40 | **14075** | **DZH-63-40-PPV-A**[1] | | | |
| | 50 | **14076** | **DZH-63-50-PPV-A**[1] | | | |
| | 80 | **14077** | **DZH-63-80-PPV-A**[1] | | | |
| | 100 | **14078** | **DZH-63-100-PPV-A**[1] | | | |
| | 125 | **14079** | **DZH-63-125-PPV-A**[1] | | | |
| | 160 | **14080** | **DZH-63-160-PPV-A**[1] | | | |
| | 200 | **14081** | **DZH-63-200-PPV-A**[1] | | | |
| | 250 | **14082** | **DZH-63-250-PPV-A**[1] | | | |
| | 300 | **14083** | **DZH-63-300-PPV-A**[1] | | | |

1) The scope of delivery includes a hexagonal nut for the piston rod thread

| Ordering data – Variants | | | | |
|---|---|---|---|---|
| Type | Piston ∅ [mm] | Stroke [mm] | Part No. | Type |
| Variable stroke | | | | |
| | 16 | 1 … 200 | **150295** | **DZH-16-…-PPV-A** |
| | 20 | 1 … 320 | **150294** | **DZH-20-…-PPV-A** |
| | 25 | 1 … 500 | **150293** | **DZH-25-…-PPV-A**[1] |
| | 32 | 1 … 1,000 | **14040** | **DZH-32-…-PPV-A**[1] |
| | 40 | 1 … 1,000 | **14051** | **DZH-40-…-PPV-A**[1] |
| | 50 | 1 … 1,000 | **14062** | **DZH-50-…-PPV-A**[1] |
| | 63 | 1 … 1,000 | **14073** | **DZH-63-…-PPV-A**[1] |
| | | | | |
| S2 – Through piston rod | | | | |
| | 16 | 1 … 200 | **151155** | **DZH-16-…-PPV-A-S2** |
| | 20 | 1 … 320 | **151154** | **DZH-20-…-PPV-A-S2** |
| | 25 | 1 … 500 | **151153** | **DZH-25-…-PPV-A-S2**[1] |
| | 32 | 1 … 1000 | **151772** | **DZH-32-…-PPV-A-S2**[1] |
| | 40 | 1 … 1000 | **151773** | **DZH-40-…-PPV-A-S2**[1] |
| | 50 | 1 … 1000 | **151774** | **DZH-50-…-PPV-A-S2**[1] |
| | 63 | 1 … 1000 | **151775** | **DZH-63-…-PPV-A-S2**[1] |
| | | | | |
| S6 – Heat resistant seals up to 120 °C | | | | |
| | 16 | 1 … 200 | **151156** | **DZH-16-…-PPV-A-S6** |
| | 20 | 1 … 320 | **151157** | **DZH-20-…-PPV-A-S6** |
| | 25 | 1 … 500 | **151158** | **DZH-25-…-PPV-A-S6**[1] |
| | 32 | 1 … 1000 | **16531** | **DZH-32-…-PPV-A-S6**[1] |
| | 40 | 1 … 1000 | **16532** | **DZH-40-…-PPV-A-S6**[1] |
| | 50 | 1 … 1000 | **16533** | **DZH-50-…-PPV-A-S6**[1] |
| | 63 | 1 … 1000 | **16534** | **DZH-63-…-PPV-A-S6**[1] |
| | | | | |
| S20 – Through, hollow piston rod | | | | |
| | 16 | 1 … 200 | **158379** | **DZH-16-…-PPV-A-S20** |
| | 20 | 1 … 320 | **158380** | **DZH-20-…-PPV-A-S20** |
| | 25 | 1 … 500 | **158381** | **DZH-25-…-PPV-A-S20**[1] |

1) The scope of delivery includes a hexagonal nut for the piston rod thread

| Ordering data – Wearing parts kits | | |
|---|---|---|
| Piston ∅ | Part No. | Type |
| 16 | **121125** | **DZH-16-PPV-A** |
| 20 | **121126** | **DZH-20-PPV-A** |
| 25 | **121127** | **DZH-25-PPV-A** |
| 32 | **108706** | **DZH-32-PPV-A** |
| 40 | **108707** | **DZH-40-PPV-A** |
| 50 | **108708** | **DZH-50-PPV-A** |
| 63 | **108709** | **DZH-63-PPV-A** |

### Foot mounting HZS, narrow

Material:
Steel

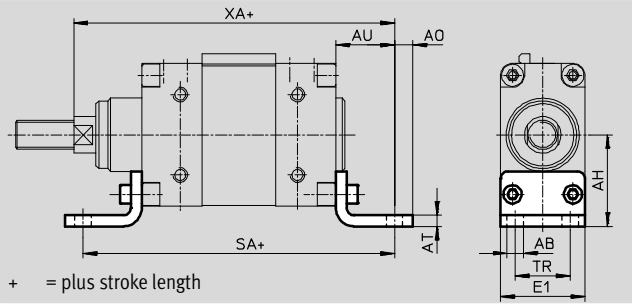


| Dimensions and ordering data | | | | | | | | | | | | | |
|---|---|---|---|---|---|---|---|---|---|---|---|---|---|
| For ∅ | AB ∅ | AH | AO | AT | AU | E1 | SA | TR | XA | CRC[1] | Weight [g] | Part No. | Type |
| 16 | 4.5 | 24.5 | 4 | 4 | 21 | 20 | 120.5 | 12 | 117 | 1 | 61 | **151933** | **HZS-16** |
| 20 | 4.5 | 27.5 | 4 | 4 | 21 | 23 | 132.5 | 15 | 130 | 1 | 72 | **151932** | **HZS-20** |
| 25 | 5.5 | 30 | 5 | 4 | 25 | 26 | 142.5 | 16.5 | 138 | 1 | 99 | **151931** | **HZS-25** |
| 32 | 7 | 32 | 8 | 4 | 24 | 36 | 142 | 24 | 144 | 1 | 114 | **14879** | **HZS-32** |
| 40 | 9 | 40 | 10 | 5 | 28 | 40 | 161 | 25 | 163 | 1 | 175 | **14880** | **HZS-40** |
| 50 | 9 | 50 | 10 | 6 | 32 | 46 | 170 | 30 | 175.5 | 1 | 283 | **14881** | **HZS-50** |
| 63 | 9 | 62 | 15 | 6 | 35 | 54 | 185 | 38 | 190 | 1 | 381 | **14882** | **HZS-63** |

1) Corrosion resistance class CRC 1 to Festo standard FN 940070
Low corrosion stress. For dry indoor applications or transport and storage protection. Also applies to parts behind covers, in the non-visible interior area, and parts which are covered in the application (e.g. drive trunnions).

### Flange mounting FZS

Material:
Wrought aluminium alloy

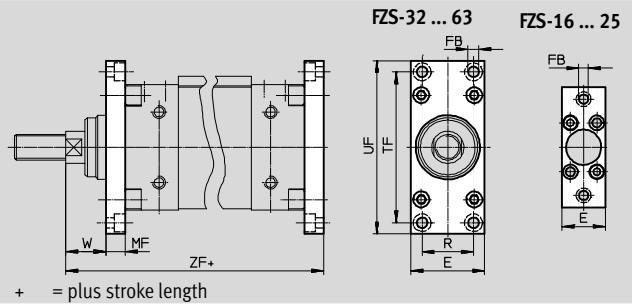


| Dimensions and ordering data | | | | | | | | | | | | |
|---|---|---|---|---|---|---|---|---|---|---|---|---|
| For ∅ | E | FB ∅ | MF | R | TF | UF | W | ZF | CRC[1] | Weight [g] | Part No. | Type |
| 16 | 21 | 4.8 | 10 | – | 48 | 60 | 7.5 | 106 | 2 | 27 | **151930** | **FZS-16** |
| 20 | 24 | 4.8 | 10 | – | 54 | 70 | 8.5 | 119 | 2 | 35 | **151929** | **FZS-20** |
| 25 | 27 | 5.8 | 10 | – | 60 | 75 | 10.5 | 123 | 2 | 43 | **151928** | **FZS-25** |
| 32 | 36 | 5.8 | 10 | 24 | 62 | 75 | 16 | 130 | 2 | 59 | **14887** | **FZS-32** |
| 40 | 40 | 5.8 | 10 | 28 | 78 | 90 | 20 | 145 | 2 | 76 | **14888** | **FZS-40** |
| 50 | 46 | 6.8 | 12 | 32 | 94 | 108 | 25.5 | 155.5 | 2 | 132 | **14889** | **FZS-50** |
| 63 | 54 | 6.8 | 15 | 40 | 120 | 134 | 25 | 170 | 2 | 248 | **14890** | **FZS-63** |

1) Corrosion resistance class CRC 2 to Festo standard FN 940070
Moderate corrosion stress. Indoor applications in which condensation may occur. External visible parts with primarily decorative requirements for the surface and which are in direct contact with the ambient atmosphere typical for industrial applications.

**Foot mounting HZB, wide**
**for piston ∅ 16 … 25 mm**

Material:
Wrought aluminium alloy

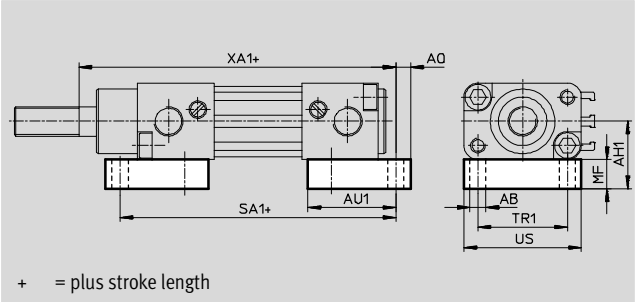


**for piston ∅ 32 … 63 mm**

Material:
Steel

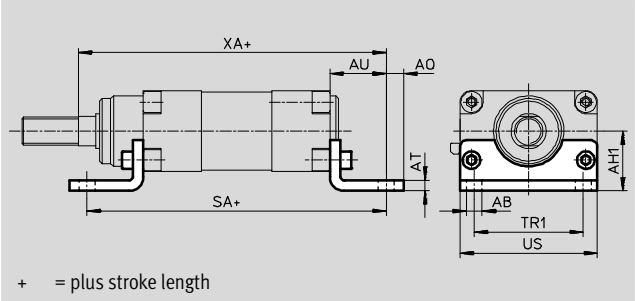


**Dimensions and ordering data**

| For ∅ | AB ∅ | AH1 | AO | AT | AU | AU1 | MF | SA | SA1 | TR1 | US | XA | XA1 | CRC[1] | Weight [g] | Part No. | Type |
|---|---|---|---|---|---|---|---|---|---|---|---|---|---|---|---|---|---|
| 16 | 4.5 | 20 | 4 | – | – | 23 | 10 | – | 88.5 | 23 | 30 | – | 101 | 2 | 48 | **151936** | **HZB-16** |
| 20 | 4.5 | 21.5 | 4 | – | – | 26 | 10 | – | 100.5 | 27 | 35 | – | 114 | 2 | 62 | **151935** | **HZB-20** |
| 25 | 5.5 | 23 | 5 | – | – | 30 | 10 | – | 104.5 | 30.5 | 40 | – | 119 | 2 | 85 | **151934** | **HZB-25** |
| 32 | 7 | 26 | 8 | 4 | 24 | – | – | 142 | – | 32 | 48 | 144 | – | 1 | 139 | **14875** | **HZB-32** |
| 40 | 9 | 29 | 10 | 5 | 28 | – | – | 161 | – | 46 | 62 | 163 | – | 1 | 243 | **14876** | **HZB-40** |
| 50 | 9 | 34 | 10 | 6 | 32 | – | – | 170 | – | 62 | 78 | 175.5 | – | 1 | 426 | **14877** | **HZB-50** |
| 63 | 9 | 38 | 15 | 6 | 35 | – | – | 185 | – | 88 | 104 | 190 | – | 1 | 673 | **14878** | **HZB-63** |

1) Corrosion resistance class CRC 1 to Festo standard FN 940070
Low corrosion stress. For dry indoor applications or transport and storage protection. Also applies to parts behind covers, in the non-visible interior area, and parts which are covered in the application (e.g. drive trunnions).
Corrosion resistance class CRC 2 to Festo standard FN 940070
Moderate corrosion stress. Indoor applications in which condensation may occur. External visible parts with primarily decorative requirements for the surface and which are in direct contact with the ambient atmosphere typical for industrial applications.

**Swivel flange SZSB, narrow/wide**
**for piston ∅ 16 … 25 mm**

Material:
High-alloy stainless steel
Free of copper and PTFE
RoHS-compliant

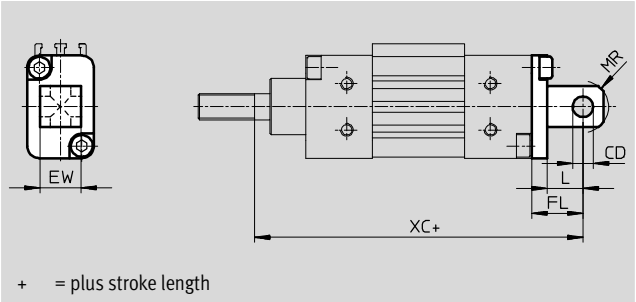


**Dimensions and ordering data**

| For ∅ | CD ∅ H8 | EW | FL | L | XC | CRC[1] | Weight [g] | Part No. | Type |
|---|---|---|---|---|---|---|---|---|---|
| 16 | 4 | 8 | 14 | 8 | 110 | 2 | 27 | **151927** | **SZSB-16** |
| 20 | 6 | 12 | 16 | 10 | 125 | 2 | 39 | **151926** | **SZSB-20** |
| 25 | 8 | 16 | 20 | 14 | 133 | 2 | 66 | **151925** | **SZSB-25** |

1) Corrosion resistance class CRC 2 to Festo standard FN 940070
Moderate corrosion stress. Indoor applications in which condensation may occur. External visible parts with primarily decorative requirements for the surface and which are in direct contact with the ambient atmosphere typical for industrial applications.

**Swivel flange SZS, narrow**
**for piston ∅ 32 … 63 mm**

Material:
Die-cast aluminium
Free of copper and PTFE
RoHS-compliant

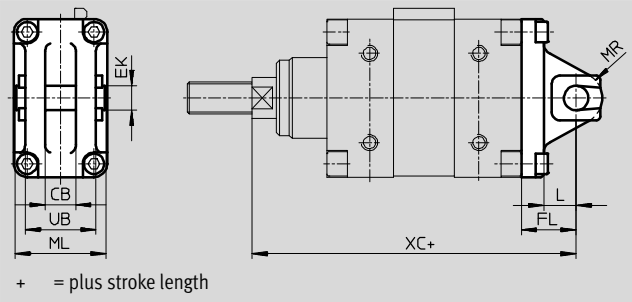


| Dimensions and ordering data | | | | | | | | | | | | |
|---|---|---|---|---|---|---|---|---|---|---|---|---|
| For ∅ | CB<br>+0.2 | EK<br>∅<br>e8 | FL | L | ML | MR | UB<br>±0.1 | XC | CRC[1] | Weight<br>[g] | Part No. | Type |
| 32 | 9.4 | 10 | 22 | 13.5 | 35.6 | 11 | 25.8 | 142 | 2 | 79 | **14883** | **SZS-32** |
| 40 | 12.4 | 12 | 25 | 15.5 | 39.6 | 13 | 28.8 | 160 | 2 | 117 | **14884** | **SZS-40** |
| 50 | 14.4 | 12 | 27 | 15.5 | 45.6 | 13 | 34.8 | 170.5 | 2 | 167 | **14885** | **SZS-50** |
| 63 | 16.4 | 16 | 35 | 22.4 | 53.6 | 17 | 40.8 | 190 | 2 | 333 | **14886** | **SZS-63** |

1) Corrosion resistance class CRC 2 to Festo standard FN 940070
Moderate corrosion stress. Indoor applications in which condensation may occur. External visible parts with primarily decorative requirements for the surface and which are in direct contact with the ambient atmosphere typical for industrial applications.

**Swivel flange SZB, wide**
**for piston ∅ 32 … 63 mm**

Material:
High-alloy stainless steel
Free of copper and PTFE
RoHS-compliant

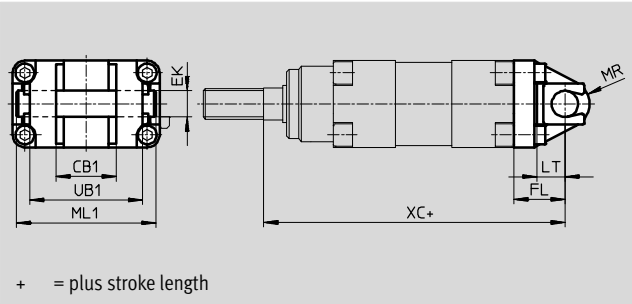


| Dimensions and ordering data | | | | | | | | | | | | |
|---|---|---|---|---|---|---|---|---|---|---|---|---|
| For ∅ | CB1<br>H14 | EK<br>∅<br>e8 | FL | LT | ML1 | MR | UB1 | XC | CRC[1] | Weight<br>[g] | Part No. | Type |
| 32 | 16 | 10 | 22 | 14 | 47 | 11 | $36_{-0.7}$ | 142 | 2 | 172 | **30798** | **SZB-32** |
| 40 | 28 | 12 | 25 | 15.5 | 61 | 13 | $52_{-1}$ | 160 | 2 | 288 | **30799** | **SZB-40** |
| 50 | 32 | 12 | 27 | 16 | 77 | 13 | $60_{-1}$ | 170.5 | 2 | 430 | **30629** | **SZB-50** |
| 63 | 40 | 16 | 35 | 23 | 103 | 17 | $70_{-1}$ | 190 | 2 | 679 | **30630** | **SZB-63** |

1) Corrosion resistance class CRC 2 to Festo standard FN 940070
Moderate corrosion stress. Indoor applications in which condensation may occur. External visible parts with primarily decorative requirements for the surface and which are in direct contact with the ambient atmosphere typical for industrial applications.

**Clevis foot LBZB**
**for piston ∅ 32 mm**

Material:
Tempered steel
Free of copper and PTFE
RoHS-compliant

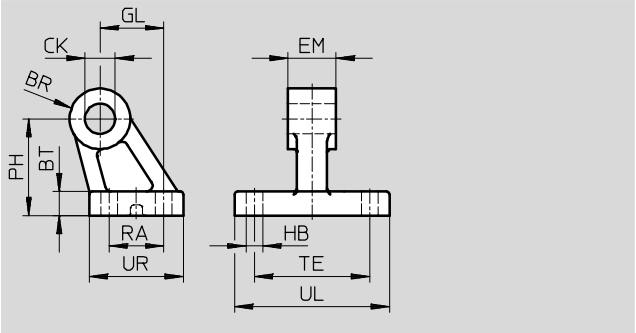


**Clevis foot LBZS**
**for piston ∅ 32 ... 63 mm**

Material:
Special steel casting
Free of copper and PTFE
RoHS-compliant

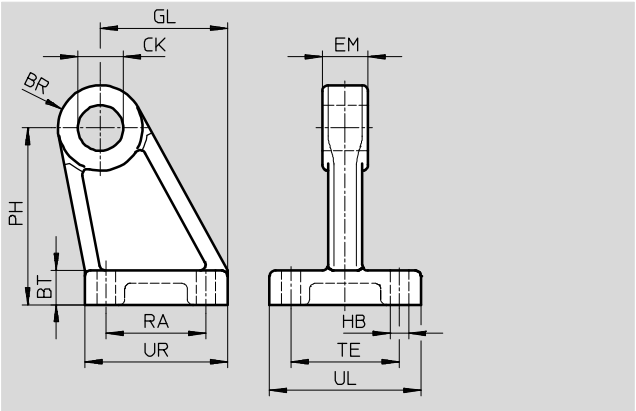


**Dimensions and ordering data**

| For ∅ | BR | BT | CK ∅ | EM −0.3 | GL | HB ∅ | PH | RA | TE | UL | UR | CRC[1] | Weight [g] | Part No. | Type |
|---|---|---|---|---|---|---|---|---|---|---|---|---|---|---|---|
| LBZB | | | | | | | | | | | | | | | |
| 32 | 10 | 8 | $10^{H9}$ | 15.8 | 21 | 5.5 | 32 | 18 | 38 | 41 | 31 | 2 | 131 | **33842** | **LBZB-32** |
| | | | | | | | | | | | | | | | |
| LBZS | | | | | | | | | | | | | | | |
| 32 | 10 | 8 | $10^{H8}$ | 9 | 21 | 5.5 | 33.5 | 18 | 24 | 35 | 31 | 2 | 92 | **33843** | **LBZS-32** |
| 40 | 11 | 10 | $12^{H8}$ | 12 | 24 | 5.5 | 40 | 22 | 28 | 39 | 35 | 2 | 138 | **33844** | **LBZS-40** |
| 50 | 13 | 12 | $12^{H8}$ | 14 | 33 | 6.6 | 51.5 | 30 | 30 | 45 | 45 | 2 | 244 | **33845** | **LBZS-50** |
| 63 | 15 | 12 | $16^{H8}$ | 16 | 37 | 6.6 | 62 | 35 | 38 | 53 | 51 | 2 | 321 | **33846** | **LBZS-63** |

1) Corrosion resistance class CRC 2 to Festo standard FN 940070
Moderate corrosion stress. Indoor applications in which condensation may occur. External visible parts with primarily decorative requirements for the surface and which are in direct contact with the ambient atmosphere typical for industrial applications.

**Ordering data – Mounting attachments** Technical data ➔ Internet: clevis foot

| Designation | For ∅ | Part No. | Type |
|---|---|---|---|
| Clevis foot LBN | | | |
| | 16 | **6058** | **LBN-12/16** |
| | 20 | **6059** | **LBN-20/25** |
| | 25 | | |
| Clevis foot LBG | | | |
| 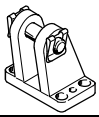 | 32 | **31761** | **LBG-32** |
| | 40 | **31762** | **LBG-40** |
| | 50 | **31763** | **LBG-50** |
| | 63 | **31764** | **LBG-63** |

| Designation | For ∅ | Part No. | Type |
|---|---|---|---|
| Clevis foot LN | | | |
| 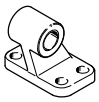 | 32 | **5147** | **LN-32** |
| | 40 | **5148** | **LN-40** |
| | 50 | **5149** | **LN-50** |
| | 63 | **5150** | **LN-63** |
| Right-angle clevis foot LQG | | | |
| 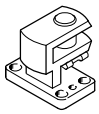 | 32 | **31768** | **LQG-32** |
| | 40 | **31769** | **LQG-40** |
| | 50 | **31770** | **LQG-50** |
| | 63 | **31771** | **LQG-63** |

**Ordering data – Piston rod attachments** Technical data ➔ Internet: piston-rod attachment

| Designation | For ∅ | Part No. | Type |
|---|---|---|---|
| Rod eye SGS | | | |
| | 16 | **9254** | **SGS-M6** |
| | 20 | **9255** | **SGS-M8** |
| | 25 | **9261** | **SGS-M10x1,25** |
| | 32 | | |
| | 40 | **9262** | **SGS-M12x1,25** |
| | 50 | **9263** | **SGS-M16x1,5** |
| | 63 | | |
| Rod clevis SG | | | |
| | 16 | **3110** | **SG-M6** |
| | 20 | **3111** | **SG-M8** |
| | 25 | **6144** | **SG-M10x1,25** |
| | 32 | | |
| | 40 | **6145** | **SG-M12x1,25** |
| | 50 | **6146** | **SG-M16x1,5** |
| | 63 | | |
| Coupling piece KSZ | | | |
| 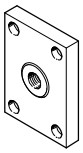 | 16 | **36123** | **KSZ-M6** |
| | 20 | **36124** | **KSZ-M8** |
| | 25 | **36125** | **KSZ-M10x1,25** |
| | 32 | | |
| | 40 | **36126** | **KSZ-M12x1,25** |
| | 50 | **36127** | **KSZ-M16x1,5** |
| | 63 | | |

| Designation | For ∅ | Part No. | Type |
|---|---|---|---|
| Rod clevis SGA | | | |
| | 16 | **–** | **–** |
| | 20 | **–** | **–** |
| | 25 | **32954** | **SGA-M10x1,25** |
| | 32 | | |
| | 40 | **10767** | **SGA-M12x1,25** |
| | 50 | **10768** | **SGA-M16x1,5** |
| | 63 | | |
| Self-aligning rod coupler FK | | | |
| | 16 | **2061** | **FK-M6** |
| | 20 | **2062** | **FK-M8** |
| | 25 | **6140** | **FK-M10x1,25** |
| | 32 | | |
| | 40 | **6141** | **FK-M12x1,25** |
| | 50 | **6142** | **FK-M16x1,5** |
| | 63 | | |
| Adapter AD | | | |
| | 16 | **157328** | **AD-M6-M5** |
| | | **157329** | **AD-M6-1/8** |
| | | **157330** | **AD-M6-1/4** |
| | 20 | **157331** | **AD-M8-1/8** |
| | | **157332** | **AD-M8-1/4** |
| | 25 | **157333** | **AD-M10x1,25-1/8** |
| | | **157334** | **AD-M10x1,25-1/4** |

| Ordering data – Block-shaped proximity sensors, magneto-resistive | | | | | | | Technical data ➔ Internet: smto |
|---|---|---|---|---|---|---|---|
| | Mounting | Switch output | Electrical connection | | Cable length [m] | Part No. | Type |
| | | | Cables | M8 plug | | | |
| NO contact | | | | | | | |
| | With accessories | PNP | 3 wires | – | 2.5 | **151683** | **SMTO-1-PS-K-LED-24-C** |
| | | | – | 3-pin | – | **151685** | **SMTO-1-PS-S-LED-24-C** |
| | | NPN | 3 wires | – | 2.5 | **151684** | **SMTO-1-NS-K-LED-24-C** |
| | | | – | 3-pin | – | **151686** | **SMTO-1-NS-S-LED-24-C** |

| Ordering data – Block-shaped proximity sensors, magnetic reed | | | | | | Technical data ➔ Internet: smeo |
|---|---|---|---|---|---|---|
| | Mounting | Electrical connection | | Cable length [m] | Part No. | Type |
| | | Cables | M8 plug | | | |
| NO contact | | | | | | |
| | With accessories | 3 wires | – | 2.5 | **30459** | **SMEO-1-LED-24-B** |
| | | 3 wires | – | 5.0 | **151672** | **SMEO-1-LED-24-K5-B** |
| | | – | 3-pin | – | **150848** | **SMEO-1-S-LED-24-B** |

| Ordering data – Block-shaped proximity sensor, pneumatic | | | | Technical data ➔ Internet: smpo |
|---|---|---|---|---|
| | Mounting | Pneumatic connection | Part No. | Type |
| 3/2-way valve, normally closed | | | | |
| 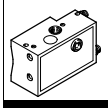 | With accessories | Barbed fitting for tubing ID of 3 mm | **31008** | **SMPO-1-H-B** |

| Ordering data – Mounting kit | | | Technical data ➔ Internet: smb |
|---|---|---|---|
| | Mounting | Part No. | Type |
| 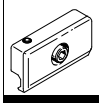 | for cylinder with tie rod ∅ 6 mm or DUO rail mounting profile | **11886** | **SMB-1** |

**Ordering data – Proximity sensors for T-slot, magneto-resistive** Technical data ➔ Internet: smt

| | Type of mounting | Switch output | Electrical connection | Cable length [m] | Part No. | Type |
|---|---|---|---|---|---|---|
| N/O contact | | | | | | |
| 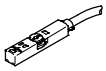 | Insertable in the slot from above, flush with cylinder profile, short design | PNP | Cable, 3-wire | 2.5 | **574335** | **SMT-8M-A-PS-24V-E-2,5-OE** |
| | | | Plug M8x1, 3-pin | 0.3 | **574334** | **SMT-8M-A-PS-24V-E-0,3-M8D** |
| | | | Plug M12x1, 3-pin | 0.3 | **574337** | **SMT-8M-A-PS-24V-E-0,3-M12** |
| | | NPN | Cable, 3-wire | 2.5 | **574338** | **SMT-8M-A-NS-24V-E-2,5-OE** |
| | | | Plug M8x1, 3-pin | 0.3 | **574339** | **SMT-8M-A-NS-24V-E-0,3-M8D** |
| N/C contact | | | | | | |
| 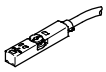 | Insertable in the slot from above, flush with cylinder profile, short design | PNP | Cable, 3-wire | 7.5 | **574340** | **SMT-8M-A-PO-24V-E-7,5-OE** |

**Ordering data – Proximity sensors for T-slot, magnetic reed** Technical data ➔ Internet: sme

| | Type of mounting | Switch output | Electrical connection | Cable length [m] | Part No. | Type |
|---|---|---|---|---|---|---|
| N/O contact | | | | | | |
| 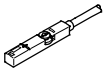 | Insertable in the slot from above, flush with cylinder profile | Contacting | Cable, 3-wire | 2.5 | **543862** | **SME-8M-DS-24V-K-2,5-OE** |
| | | | | 5.0 | **543863** | **SME-8M-DS-24V-K-5,0-OE** |
| | | | Cable, 2-wire | 2.5 | **543872** | **SME-8M-ZS-24V-K-2,5-OE** |
| | | | Plug M8x1, 3-pin | 0.3 | **543861** | **SME-8M-DS-24V-K-0,3-M8D** |
| | Insertable in the slot lengthwise, flush with the cylinder profile | Contacting | Cable, 3-wire | 2.5 | **150855** | **SME-8-K-LED-24** |
| | | | Plug M8x1, 3-pin | 0.3 | **150857** | **SME-8-S-LED-24** |
| N/C contact | | | | | | |
| | Insertable in the slot lengthwise, flush with the cylinder profile | Contacting | Cable, 3-wire | 7.5 | **160251** | **SME-8-O-K-LED-24** |

**Ordering data – Connecting cables** Technical data ➔ Internet: nebu

| | Electrical connection, left | Electrical connection, right | Cable length [m] | Part No. | Type |
|---|---|---|---|---|---|
| | Straight socket, M8x1, 3-pin | Cable, open end, 3-wire | 2.5 | **541333** | **NEBU-M8G3-K-2.5-LE3** |
| | | | 5 | **541334** | **NEBU-M8G3-K-5-LE3** |
| | Straight socket, M12x1, 5-pin | Cable, open end, 3-wire | 2.5 | **541363** | **NEBU-M12G5-K-2.5-LE3** |
| | | | 5 | **541364** | **NEBU-M12G5-K-5-LE3** |
| | Angled socket, M8x1, 3-pin | Cable, open end, 3-wire | 2.5 | **541338** | **NEBU-M8W3-K-2.5-LE3** |
| | | | 5 | **541341** | **NEBU-M8W3-K-5-LE3** |
| | Angled socket, M12x1, 5-pin | Cable, open end, 3-wire | 2.5 | **541367** | **NEBU-M12W5-K-2.5-LE3** |
| | | | 5 | **541370** | **NEBU-M12W5-K-5-LE3** |

**Ordering data – Slot cover for T-slot**

| | Mounting | Length | Part No. | Type |
|---|---|---|---|---|
| | inserted from above | 2x 0.5 m | **151680** | **ABP-5-S** |

**Ordering data – One-way flow control valves** Technical data ➔ Internet: grl

| | Connection | | Material | Part No. | Type |
|---|---|---|---|---|---|
| | Thread | For tubing OD | | | |
| for exhaust air | | | | | |
| | M5 | 3 | Metal design | **193137** | **GRLA-M5-QS-3-D** |
| | | 4 | | **193138** | **GRLA-M5-QS-4-D** |
| | | 6 | | **193139** | **GRLA-M5-QS-6-D** |
| | G1/8 | 3 | | **193142** | **GRLA-1/8-QS-3-D** |
| | | 4 | | **193143** | **GRLA-1/8-QS-4-D** |
| | | 6 | | **193144** | **GRLA-1/8-QS-6-D** |
| | | 8 | | **193145** | **GRLA-1/8-QS-8-D** |
| | G1/4 | 6 | | **193146** | **GRLA-1/4-QS-6-D** |
| | | 8 | | **193147** | **GRLA-1/4-QS-8-D** |
| | | 10 | | **193148** | **GRLA-1/4-QS-10-D** |
| | G3/8 | 6 | | **193149** | **GRLA-3/8-QS-6-D** |
| | | 8 | | **193150** | **GRLA-3/8-QS-8-D** |
| | | 10 | | **193151** | **GRLA-3/8-QS-10-D** |
| for supply air | | | | | |
| | M5 | 3 | Metal design | **193153** | **GRLZ-M5-QS-3-D** |
| | | 4 | | **193154** | **GRLZ-M5-QS-4-D** |
| | | 6 | | **193155** | **GRLZ-M5-QS-6-D** |
| | G1/8 | 3 | | **193156** | **GRLZ-1/8-QS-3-D** |
| | | 4 | | **193157** | **GRLZ-1/8-QS-4-D** |
| | | 6 | | **193158** | **GRLZ-1/8-QS-6-D** |
| | | 8 | | **193159** | **GRLZ-1/8-QS-8-D** |