On-off/soft-start valves MS-EM/EE/DL/DE, MS series

FESTO

On-off/soft-start valves MS-EM/EE/DL/DE, MS series

Product range overview – MS series service units

Type		Size	Pneumatic connection in housing	Connecting plate	Pressure regulation range [bar]						Grade of filtration [µm]			
					0.05 ... 0.7	0.05 ... 2.5	0.1 ... 4	0.3 ... 7	0.1 ... 12	0.5 ... 16	0.01	1	5	40
Code				AG...	D2	D4	D5	D6	D7	D8	A	B	C	E
Service units														
MSB-FRC	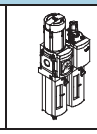	4	G⅛, G¼	G⅛, G¼, G⅜	–	–	–	■	■	–	–	–	■	■
		6	G¼, G⅜, G½	G¼, G⅜, G½, G¾	–	–	–	■	■	–	–	–	■	■
		9	–											
		12	–											
Service unit combinations (further variants can be ordered using the configurator ➔ Internet: msb4, msb6 or msb9)														
MSB	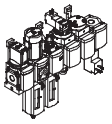	4	G¼	G⅛, G¼, G⅜	–	–	–	■	■	–	–	–	■	■
		6	G½	G¼, G⅜, G½, G¾	–	–	–	■	■	–	–	–	■	■
		9	–											
		12	–											
Individual devices														
Filter regulators **MS-LFR**	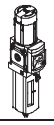	4	G⅛, G¼	G⅛, G¼, G⅜	–	–	■	■	■	–	–	–	■	■
		6	G¼, G⅜, G½	G¼, G⅜, G½, G¾	–	–	■	■	■	■	–	–	■	■
		9	G¾, G1	G½, G¾, G1, G1¼, G1½	–	–	■	■	■	■	–	–	■	■
		12	–	G1, G1¼, G1½, G2	–	–	–	■	■	■	–	–	■	■
Filters **MS-LF**	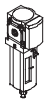	4	G⅛, G¼	G⅛, G¼, G⅜	–	–	–	–	–	–	–	–	■	■
		6	G¼, G⅜, G½	G¼, G⅜, G½, G¾	–	–	–	–	–	–	–	–	■	■
		9	G¾, G1	G½, G¾, G1, G1¼, G1½	–	–	–	–	–	–	–	–	■	■
		12	–	G1, G1¼, G1½, G2	–	–	–	–	–	–	–	–	■	■
Fine and micro filters **MS-LFM**	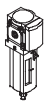	4	G⅛, G¼	G⅛, G¼, G⅜	–	–	–	–	–	–	■	■	–	–
		6	G¼, G⅜, G½	G¼, G⅜, G½, G¾	–	–	–	–	–	–	■	■	–	–
		9	G¾, G1	G½, G¾, G1, G1¼, G1½	–	–	–	–	–	–	■	■	–	–
		12	–	G1, G1¼, G1½, G2	–	–	–	–	–	–	■	■	–	–
Activated carbon filters **MS-LFX**		4	G⅛, G¼	G⅛, G¼, G⅜	–	–	–	–	–	–	–	–	–	–
		6	G¼, G⅜, G½	G¼, G⅜, G½, G¾	–	–	–	–	–	–	–	–	–	–
		9	G¾, G1	G½, G¾, G1, G1¼, G1½	–	–	–	–	–	–	–	–	–	–
		12	–	G1, G1¼, G1½, G2	–	–	–	–	–	–	–	–	–	–
Water separators **MS-LWS**	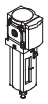	4	–											
		6	G¼, G⅜, G½	G¼, G⅜, G½, G¾	–	–	–	–	–	–	–	–	–	–
		9	G¾, G1	G½, G¾, G1, G1¼, G1½	–	–	–	–	–	–	–	–	–	–
		12	–	G1, G1¼, G1½, G2	–	–	–	–	–	–	–	–	–	–

On-off/soft-start valves MS-EM/EE/DL/DE, MS series

Product range overview – MS series service units

Type	Size	Bowl guard		Condensate drains				Pressure indicator					Security		Options		→ Page/ Internet
		Plastic bowl with plastic bowl guard	Metal bowl	Manual rotary	Semi-automatic	Fully automatic	External, fully automatic, electrical	Cover plate (without pressure gauge)	Integrated MS pressure gauge	Adapter plate for EN pressure gauge G1/8	Adapter plate for EN pressure gauge G1/4	Pressure sensor	Rotary knob with detent, lockable via accessories	Rotary knob with integrated lock	Silencer	Flow direction from right to left	
Code		R	U	M	H	V	E...	VS	AG	A8	A4	AD...	AS	E11	S	Z	
Service units																	
MSB-FRC	4	■	–	■	–	■	–	–	■	–	–	–	■	–	–	■	msb4
	6	■	■	■	–	■	–	–	■	–	–	–	■	–	–	■	msb6
	9	–															–
	12	–															–
Service unit combinations																	
MSB	4	■	■	■	–	■	–	–	■	–	–	–	■	–	–	■	msb4
	6	■	■	■	–	■	–	–	■	–	–	–	■	–	–	■	msb6
	9	–															–
	12	–															–
Individual devices																	
Filter regulators	4	■	■	■	■	■	–	■	■	■	■	■	■	■	–	■	ms4-lfr
MS-LFR	6	■	■	■	■	■	■	■	■	–	■	■	■	■	–	■	ms6-lfr
	9	–	■	■	■	■	■	■	■	–	■	■	■	■	–	■	ms9-lfr
	12	–	■	■	–	■	■	■	■	–	■	–	■	■	–	■	ms12-lfr
Filters	4	■	■	■	■	■	–	–	–	–	–	–	–	–	–	■	ms4-lf
MS-LF	6	■	■	■	■	■	■	–	–	–	–	–	–	–	–	■	ms6-lf
	9	–	■	■	■	■	■	–	–	–	–	–	–	–	–	■	ms9-lf
	12	–	■	■	–	■	■	–	–	–	–	–	–	–	–	■	ms12-lf
Fine and micro	4	■	■	■	■	■	–	–	–	–	–	–	–	–	–	■	ms4-lfm
filters	6	■	■	■	■	■	■	–	–	–	–	–	–	–	–	■	ms6-lfm
MS-LFM	9	–	■	■	■	■	■	–	–	–	–	–	–	–	–	■	ms9-lfm
	12	–	■	■	–	■	■	–	–	–	–	–	–	–	–	■	ms12-lfm
Activated carbon	4	■	■	–	–	–	–	–	–	–	–	–	–	–	–	■	ms4-lfx
filters	6	■	■	–	–	–	–	–	–	–	–	–	–	–	–	■	ms6-lfx
MS-LFX	9	–	■	–	–	–	–	–	–	–	–	–	–	–	–	■	ms9-lfx
	12	–	■	–	–	–	–	–	–	–	–	–	–	–	–	■	ms12-lfx
Water separators	4	–															–
MS-LWS	6	–	■	–	–	■	■	–	–	–	–	–	–	–	–	■	ms6-lws
	9	–	■	–	–	■	■	–	–	–	–	–	–	–	–	■	ms9-lws
	12	–	■	–	–	■	■	–	–	–	–	–	–	–	–	■	ms12-lws

On-off/soft-start valves MS-EM/EE/DL/DE, MS series

Product range overview – MS series service units

Type		Size	Pneumatic connection in housing	Connecting plate	Pressure regulation range [bar]						Supply voltage			
					0.05 ... 0.7	0.05 ... 2.5	0.1 ... 4	0.3 ... 7	0.1 ... 12	0.5 ... 16	24 V DC, connection pattern to EN 175301	24 V DC, connection M12 to IEC 61076-2-101	110 V AC, connection pattern to EN 175301	230 V AC, connection pattern to EN 175301
Code				AG...	D2	D4	D5	D6	D7	D8	V24	V24P	V110	V230
Individual devices														
Pressure regulators **MS-LR**		4	G⅛, G¼	G⅛, G¼, G⅜	–	–	■	■	■	–	–	–	–	–
		6	G¼, G⅜, G½	G¼, G⅜, G½, G¾	–	–	■	■	■	■	–	–	–	–
		9	G¾, G1	G½, G¾, G1, G1¼, G1½	–	–	■	■	■	■	–	–	–	–
		12	–	G1, G1¼, G1½, G2	–	–	–	■	■	■	–	–	–	–
Pressure regulators **MS-LRB**		4	G¼	G⅛, G¼, G⅜	–	–	■	■	■	–	–	–	–	–
		6	G½	G¼, G⅜, G½, G¾	–	–	■	■	■	■	–	–	–	–
		9	–											
		12	–											
Precision pressure regulators **MS-LRP**	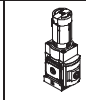	4	–											
		6	G¼, G⅜, G½	G¼, G⅜, G½, G¾	■	■	■	–	■	–	–	–	–	–
		9	–											
		12	–											
Precision pressure regulators **MS-LRPB**	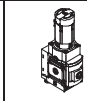	4	–											
		6	G½	G¼, G⅜, G½, G¾	■	■	■	–	■	–	–	–	–	–
		9	–											
		12	–											
Electrical pressure regulators **MS-LRE**	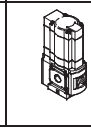	4	–											
		6	G¼, G⅜, G½	G¼, G⅜, G½, G¾	–	–	■	■	■	■	–	–	–	–
		9	–											
		12	–											
Lubricators **MS-LOE**	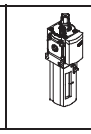	4	G⅛, G¼	G⅛, G¼, G⅜	–	–	–	–	–	–	–	–	–	–
		6	G¼, G⅜, G½	G¼, G⅜, G½, G¾	–	–	–	–	–	–	–	–	–	–
		9	G¾, G1	G½, G¾, G1, G1¼, G1½	–	–	–	–	–	–	–	–	–	–
		12	–	G1, G1¼, G1½, G2	–	–	–	–	–	–	–	–	–	–
On-off valves, manually actuated **MS-EM(1)**		4	G⅛, G¼	G⅛, G¼, G⅜	–	–	–	–	–	–	–	–	–	–
		6	G¼, G⅜, G½	G¼, G⅜, G½, G¾	–	–	–	–	–	–	–	–	–	–
		9	G¾, G1	G½, G¾, G1, G1¼, G1½	–	–	–	–	–	–	–	–	–	–
		12	–	G1, G1¼, G1½, G2	–	–	–	–	–	–	–	–	–	–
On-off valves, electrically actuated **MS-EE**	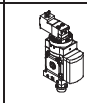	4	G⅛, G¼	G⅛, G¼, G⅜	–	–	–	–	–	–	■	–	■	■
		6	G¼, G⅜, G½	G¼, G⅜, G½, G¾	–	–	–	–	–	–	■	–	■	■
		9	G¾, G1	G½, G¾, G1, G1¼, G1½	–	–	–	–	–	–	■	■	■	■
		12	–	G1, G1¼, G1½, G2	–	–	–	–	–	–	■	■	■	■
Soft-start valves, pneumatically actuated **MS-DL**		4	G⅛, G¼	G⅛, G¼, G⅜	–	–	–	–	–	–	–	–	–	–
		6	G¼, G⅜, G½	G¼, G⅜, G½, G¾	–	–	–	–	–	–	–	–	–	–
		9	–											
		12	–	G1, G1¼, G1½, G2	–	–	–	–	–	–	–	–	–	–
Soft-start valves, electrically actuated **MS-DE**		4	G⅛, G¼	G⅛, G¼, G⅜	–	–	–	–	–	–	■	–	■	■
		6	G¼, G⅜, G½	G¼, G⅜, G½, G¾	–	–	–	–	–	–	■	–	■	■
		9	–											
		12	–	G1, G1¼, G1½, G2	–	–	–	–	–	–	■	■	■	■

On-off/soft-start valves MS-EM/EE/DL/DE, MS series

Product range overview – MS series service units

Type	Size	Bowl guard		Pressure indicator					Security		Options		→ Page/ Internet
		Plastic bowl with plastic bowl guard	Metal bowl	Cover plate (without pressure gauge)	Integrated MS pressure gauge	Adapter plate for EN pressure gauge G1/8	Adapter plate for EN pressure gauge G1/4	Pressure sensor	Rotary knob with detent, lockable via accessories	Rotary knob with integrated lock	Silencer	Flow direction from right to left	
Code		R	U	VS	AG	A8	A4	AD...	AS	E11	S	Z	
Individual devices													
Pressure regulators **MS-LR**	4	–	–	■	■	■	■	■	■	■	–	■	ms4-lr
	6	–	–	■	■	–	■	■	■	■	–	■	ms6-lr
	9	–	–	■	■	–	■	■	■	■	–	■	ms9-lr
	12	–	–	■	■	–	■	–	■	■	–	■	ms12-lr
Pressure regulators **MS-LRB**	4	–	–	■	■	■	■	■	■	■	–	■	ms4-lrb
	6	–	–	■	■	–	■	■	■	■	–	■	ms6-lrb
	9	–											–
	12	–											–
Precision pressure regulators **MS-LRP**	4	–											–
	6	–	–	■	–	■	■	■	■	■	–	■	ms6-lrp
	9	–											–
	12	–											–
Precision pressure regulators **MS-LRPB**	4	–											–
	6	–	–	■	–	■	■	■	■	■	–	■	ms6-lrpb
	9	–											–
	12	–											–
Electrical pressure regulators **MS-LRE**	4	–											–
	6	–	–	■	■	–	■	–	–	–	–	■	ms6-lre
	9	–											–
	12	–											–
Lubricators **MS-LOE**	4	■	■	–	–	–	–	–	–	–	–	■	ms4-loe
	6	■	■	–	–	–	–	–	–	–	–	■	ms6-loe
	9	–	■	–	–	–	–	–	–	–	–	■	ms9-loe
	12	–	■	–	–	–	–	–	–	–	–	■	ms12-loe
On-off valves, manually actuated **MS-EM(1)**	4	–	–	■	■	■	■	■	–	–	■	■	8
	6	–	–	■	■	–	■	■	–	–	■	■	8
	9	–	–	■	■	–	■	–	–	–	■	■	50
	12	–	–	■	■	–	■	–	–	–	■	■	68
On-off valves, electrically actuated **MS-EE**	4	–	–	■	■	■	■	■	–	–	■	■	18
	6	–	–	■	■	–	■	■	–	–	■	■	18
	9	–	–	■	■	–	■	–	–	–	■	■	58
	12	–	–	■	■	–	■	–	–	–	■	■	74
Soft-start valves, pneumatically actuated **MS-DL**	4	–	–	■	■	■	■	■	–	–	–	■	30
	6	–	–	■	■	–	■	■	–	–	–	■	30
	9	–											–
	12	–	–	■	■	–	■	–	–	–	–	■	80
Soft-start valves, electrically actuated **MS-DE**	4	–	–	■	■	■	■	■	–	–	–	■	38
	6	–	–	■	■	–	■	■	–	–	–	■	38
	9	–											–
	12	–	–	■	■	–	■	–	–	–	–	■	86

On-off/soft-start valves MS-EM/EE/DL/DE, MS series

Product range overview – MS series service units

Type		Size	Pneumatic connection in housing	Connecting plate	Performance Level		Supply voltage			
					Category 1, 1-channel	Category 4, 2-channel with self-monitoring	24 V DC, connection pattern to EN 175301	24 V DC, connection M12 to IEC 61076-2-101/ to EN 60947-5-2	110 V AC, connection pattern to EN 175301	230 V AC, connection pattern to EN 175301
Code				AG...	C	E	V24	V24P	V110	V230
Individual devices										
Soft start and exhaust valves **MS-SV-C**		4	–							
		6	G1/2	G1/4, G3/8, G1/2, G3/4	■	–	■	■	■	■
		9	G3/4, G1	G1/2, G3/4, G1, G1 1/4, G1 1/2	■	–	■	■	■	■
		12	–							
Soft start and exhaust valves **MS-SV-E**	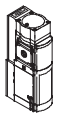	4	–							
		6	G1/2	G1/4, G3/8, G1/2, G3/4	–	■	■	–	–	–
		9	–							
		12	–							
Membrane air dryers **MS-LDM1**	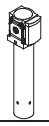	4	G1/8, G1/4	G1/8, G1/4, G3/8	–	–	–	–	–	–
		6	G1/4, G3/8, G1/2	G1/4, G3/8, G1/2, G3/4	–	–	–	–	–	–
		9	–							
		12	–							
Branching modules **MS-FRM**		4	G1/8, G1/4	G1/8, G1/4, G3/8	–	–	–	–	–	–
		6	G1/4, G3/8, G1/2	G1/4, G3/8, G1/2, G3/4	–	–	–	–	–	–
		9	G3/4, G1	G1/2, G3/4, G1, G1 1/4, G1 1/2	–	–	–	–	–	–
		12	–	G1, G1 1/4, G1 1/2, G2	–	–	–	–	–	–
Distributor blocks **MS-FRM-FRZ**		4	G1/4	–	–	–	–	–	–	–
		6	G1/2	–	–	–	–	–	–	–
		9	–							
		12	–							
Flow sensors **SFAM**		4	–							
		6	G1/2	G1/2	–	–	–	–	–	–
		9	–	G1, G1 1/2	–	–	–	–	–	–
		12	–							

On-off/soft-start valves MS-EM/EE/DL/DE, MS series

Product range overview – MS series service units

Type	Size	Bowl guard		Pressure indicator					Switch output		Options		→ Page/ Internet
		Plastic bowl with plastic bowl guard	Metal bowl	Cover plate (without pressure gauge)	Integrated MS pressure gauge	Adapter plate for EN pressure gauge G1/8	Adapter plate for EN pressure gauge G1/4	Pressure sensor	2x PNP or NPN, 1 analogue output 4 ... 20 mA	2x PNP or NPN, 1 analogue output 0 ... 10 V	Silencer	Flow direction from right to left	
Code		R	U	VS	AG	A8	A4	AD...	2SA	2SV	S	Z/R	
Individual devices													
Soft start and exhaust valves **MS-SV-C**	4	–											–
	6	–	–	■	■	–	■	■	–	–	■	■	ms6-sv
	9	–	–	■	■	–	■	■	–	–	■	■	ms9-sv
	12	–											–
Soft start and exhaust valves **MS-SV-E**	4	–											–
	6	–	–	■	■	–	■	■	–	–	■	■	ms6-sv
	9	–											–
	12	–											–
Membrane air dryers **MS-LDM1**	4	–	■	–	–	–	–	–	–	–	–	■	ms4-ldm1
	6	–	■	–	–	–	–	–	–	–	–	■	ms6-ldm1
	9	–											–
	12	–											–
Branching modules **MS-FRM**	4	–	–	■	■	■	■	■	–	–	–	■	ms4-frm
	6	–	–	■	■	–	■	■	–	–	–	■	ms6-frm
	9	–	–	■	■	–	■	■	–	–	–	■	ms9-frm
	12	–	–	■	–	–	–	–	–	–	–	–	ms12-frm
Distributor blocks **MS-FRM-FRZ**	4	–	–	–	–	–	–	–	–	–	–	■	ms4-frm
	6	–	–	–	–	–	–	–	–	–	–	■	ms6-frm
	9	–											–
	12	–											–
Flow sensors **SFAM**	4	–											–
	6	–	–	–	–	–	–	–	■	■	–	■	sfam-62
	9	–	–	–	–	–	–	–	■	■	–	■	sfam-90
	12	–											–

On-off valves MS4/MS6-EM1, MS series

Peripherals overview

FESTO

On-off valve MS4/MS6-EM1

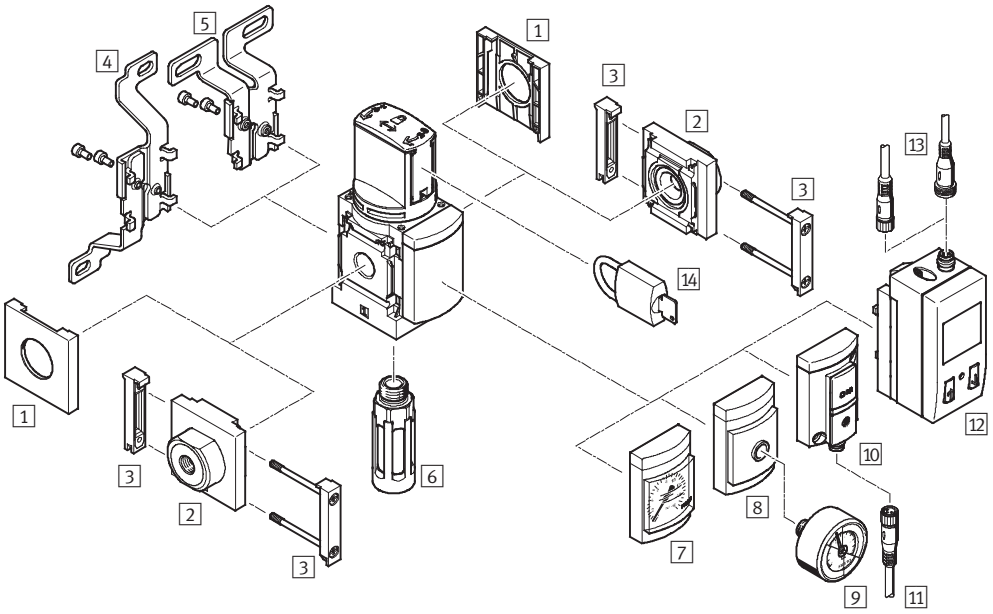

Note

Additional accessories:
- Module connector for combination with size MS4/MS6 or size MS9 ➔ Internet: amv, rmv, armv
- Adapter plate for mounting on profiles ➔ Internet: ipm-80, ipm-40-80, ipm-80-80

Mounting attachments and accessories

		Individual device		Combination		➔ Page/Internet
		Without connecting plate	With connecting plate	Without connecting plate	With connecting plate	
1	Cover cap MS4/6-END	■	–	■	–	ms4-end, ms6-end
2	Connecting plate MS4/6-AG...	–	■	–	■	ms4-ag, ms6-ag
3	Module connector MS4/6-MV	–	■	■	■	ms4-mv, ms6-mv
4	Mounting bracket MS4/6-WB	■	■	–	–	ms4-wb, ms6-wb
5	Mounting bracket MS4-WBM	■	■	–	–	ms4-wbm
6	Silencer U	■	■	■	■	93
7	MS pressure gauge AG/RG	■	■	■	■	16
8	Adapter plate for EN pressure gauge 1⁄8/1⁄4 A8/A4	■	■	■	■	16
9	Pressure gauge MA	■	■	■	■	93
10	Pressure sensor without display AD7 ... AD10	■	■	■	■	16
11	Connecting cable NEBU-M8...-LE3	■	■	■	■	93
12	Pressure sensor with display AD1 ... AD4	■	■	■	■	16
13	Connecting cable NEBU-M8...-LE3/NEBU-M12...-LE4	■	■	■	■	93
14	Padlock LRVS-D	■	■	■	■	93
–	Mounting bracket MS4/6-WP/WPB/WPE/WPM	–	■	■	■	ms4-wp, ms6-wp

On-off valves MS4/MS6-EM1, MS series

Type codes

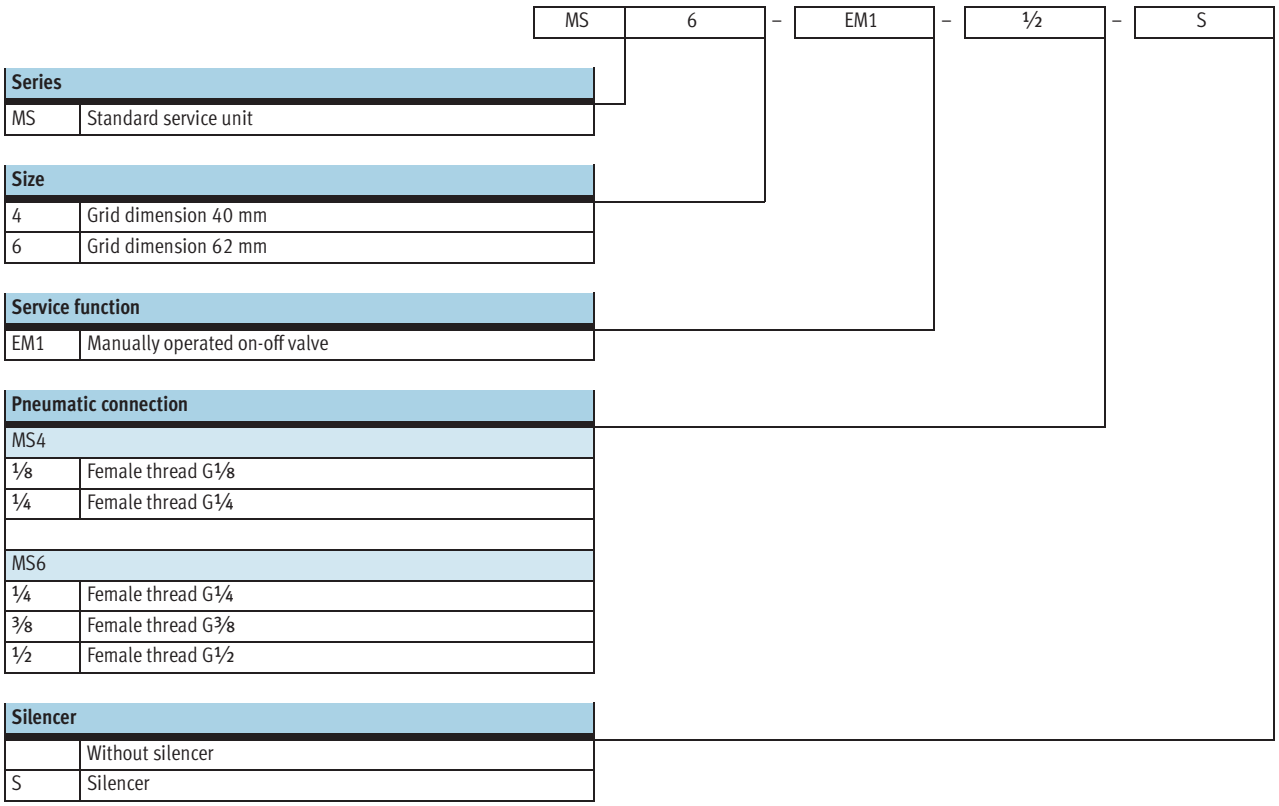

Series	
MS	Standard service unit

Size	
4	Grid dimension 40 mm
6	Grid dimension 62 mm

Service function	
EM1	Manually operated on-off valve

Pneumatic connection	
MS4	
⅛	Female thread G⅛
¼	Female thread G¼
MS6	
¼	Female thread G¼
⅜	Female thread G⅜
½	Female thread G½

Silencer	
	Without silencer
S	Silencer

Additional variants can be ordered using the modular system ➔ 16

- Connecting plates
- Pressure gauge/pressure gauge alternatives
- Alternative pressure gauge scale
- Type of mounting
- Flow direction

On-off valves MS4/MS6-EM1, MS series

Technical data

Function

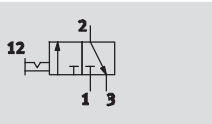

Flow rate
1,200 ... 8,700 l/min

Temperature range
–10 ... +60 °C

Pressure
0 ... 18 bar

- Manually operated on-off valve for pressurising and venting pneumatic installations
- The valve is activated by turning the rotary knob
- At connection 3 there is the facility to attach a silencer and/or to duct the exhaust air
- When the valve is closed, the rotary knob can be secured with a padlock
- Optional pressure gauge
- Optional pressure sensor

General technical data					
Size	MS4		MS6		
Pneumatic connection 1, 2	G⅛	G¼	G¼	G⅜	G½
Pneumatic connection 3	G¼		G½		
Design	Rotary slide valve				
Type of mounting	Via accessories				
	In-line installation				
Assembly position	Any				
Pressure indicator	Via pressure sensor for displaying output pressure via LCD display and electrical output				
	Via pressure sensor for displaying output pressure via operational status indicator and electrical output				
	Via pressure gauge for displaying output pressure				
	Via pressure gauge with red/green scale for displaying output pressure				
	G¼ prepared				
	G⅛ prepared		–		
Valve function	3/2-way valve, double solenoid				
Exhaust function	No flow control				
Switching position display	Knob actuator direction = flow direction				
Pilot control mode	Direct				
Direction of flow	Non-reversible				
C value [l/(s*bar)]	4.6	9.0	10.7	21.2	30.8
b value	0.51	0.39	0.56	0.49	0.57

Note: This product conforms to ISO 1179-1 and ISO 228-1

Standard nominal flow rate qnN[1] [l/min]					
Size	MS4		MS6		
Pneumatic connection	G⅛	G¼	G¼	G⅜	G½
In main flow direction 1 → 2	1,200	2,200	3,000	5,500	8,700
In relief direction 2 → 3	1,900	1,700	6,800	6,600	6,200

1) Measured at p1 = 6 bar and p2 = 5 bar, Δp = 1 bar

On-off valves MS4/MS6-EM1, MS series

Technical data

Operating and environmental conditions					
Variant		Standard		Pressure sensor AD...	
Size		MS4	MS6	MS4	MS6
Operating pressure	[bar]	0 ... 14	0 ... 18	0 ... 10	0 ... 10
Operating medium		Compressed air in accordance with ISO 8573-1:2010 [7:4:4]			
		Inert gases			
Note on operating/pilot medium		Operation with lubricated medium possible (in which case lubricated operation will always be required)			
Ambient temperature	[°C]	–10 ... +60	–10 ... +60	0 ... +50	0 ... +50
Temperature of medium	[°C]	–10 ... +60	–10 ... +60	0 ... +50	0 ... +50
Corrosion resistance	CRC[1)]	2			

1) Corrosion resistance class 2 according to Festo standard 940 070
Components requiring moderate corrosion resistance. Externally visible parts with primarily decorative surface requirements which are in direct contact with a normal industrial environment or media such as coolants or lubricating agents.

Weights [g]		
Size	MS4	MS6
On-off valve	190	580
On-off valve with silencer S	210	655

Materials

Sectional view

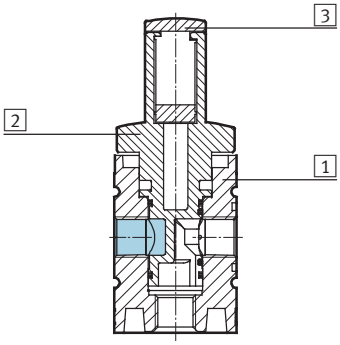

On-off valve		
1	Body	Die-cast aluminium
2	Rotary valve	PA reinforced
3	Lock slide	PA reinforced
–	Seals	NBR, TPE-U(PU)
Note on materials		RoHS-compliant
		Free of copper and PTFE (not with variants AG or AD...)

Dimensions – Basic version Download CAD Data ➔ **www.festo.com/us/cad**

With female thread, with cover plate

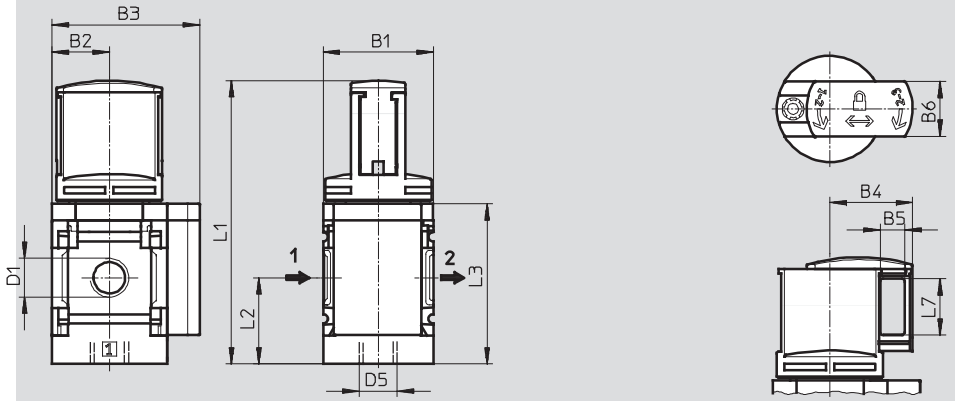

Type	B1	B2	B3	B4	B5	B6	D1	D5	L1	L2	L3	L7
MS4-EM1-⅛	40	21	54	30	9	20	G⅛	G¼	104	31.5	59	20.6
MS4-EM1-¼							G¼					
MS6-EM1-¼	62	31	76	45	10	24	G¼	G½	150.9	45.5	84.5	28.2
MS6-EM1-⅜							G⅜					
MS6-EM1-½							G½					

Note: This product conforms to ISO 1179-1 and ISO 228-1

Dimensions – Pressure gauge/pressure gauge alternatives Download CAD Data ➔ **www.festo.com/us/cad**

Integrated MS pressure gauge with standard scale AG or red-green scale RG, display unit [bar]

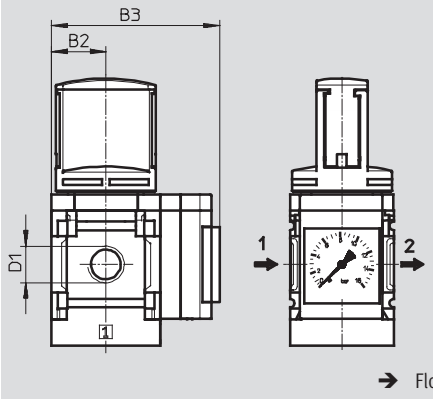

Adapter plate A8/A4 for EN pressure gauge 1⁄8/1⁄4, without pressure gauge

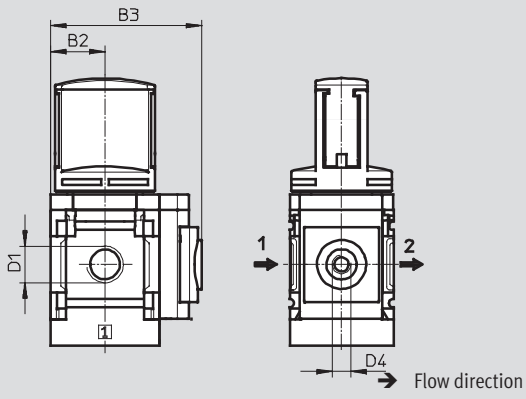

Type	B2	B3	D1	D4
MS4-EM1-1⁄8-...-AG	21	65	G1⁄8	–
MS4-EM1-1⁄4-...-AG			G1⁄4	
MS4-EM1-1⁄8-...-RG	21	66.5	G1⁄8	–
MS4-EM1-1⁄4-...-RG			G1⁄4	
MS4-EM1-1⁄8-...-A8	21	58.5	G1⁄8	G1⁄8
MS4-EM1-1⁄4-...-A8			G1⁄4	
MS4-EM1-1⁄8-...-A4	21	58.5	G1⁄8	G1⁄4
MS4-EM1-1⁄4-...-A4			G1⁄4	
MS6-EM1-1⁄4-...-AG	31	85	G1⁄4	–
MS6-EM1-3⁄8-...-AG			G3⁄8	
MS6-EM1-1⁄2-...-AG			G1⁄2	
MS6-EM1-1⁄4-...-RG	31	86.5	G1⁄4	–
MS6-EM1-3⁄8-...-RG			G3⁄8	
MS6-EM1-1⁄2-...-RG			G1⁄2	
MS6-EM1-1⁄4-...-A4	31	78.5	G1⁄4	G1⁄4
MS6-EM1-3⁄8-...-A4			G3⁄8	
MS6-EM1-1⁄2-...-A4			G1⁄2	

Note: This product conforms to ISO 1179-1 and ISO 228-1

Dimensions – Pressure gauge/pressure gauge alternatives Download CAD Data ➔ **www.festo.com/us/cad**

Pressure sensor with LCD display AD1 ... AD4 Technical data ➔ Internet: sde1

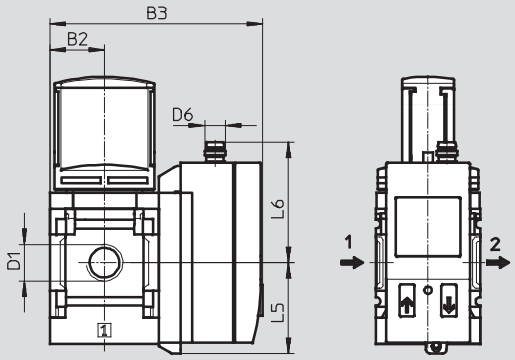

➔ Flow direction

Variant AD1:
SDE1-D10-G2-MS-L-P1-M8 with 3-pin plug M8x1, 1 switching output PNP

Variant AD2:
SDE1-D10-G2-MS-L-N1-M8 with 3-pin plug M8x1, 1 switching output NPN

Variant AD3:
SDE1-D10-G2-MS-L-PI-M12 with 4-pin plug M12x1, 1 switching output PNP and 4 ... 20 mA analogue

Variant AD4:
SDE1-D10-G2-MS-L-NI-M12 with 4-pin plug M12x1, 1 switching output NPN and 4 ... 20 mA analogue

Pressure sensor with operational status indicator AD7 ... AD10 Technical data ➔ Internet: sde5

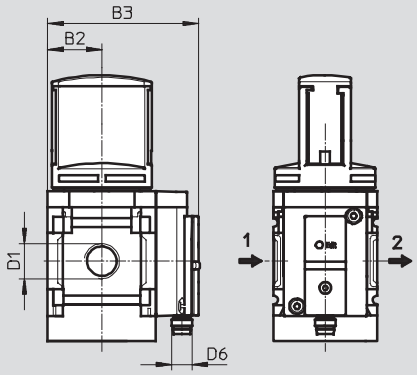

➔ Flow direction

Variant AD7:
SDE5-D10-O-...-P-M8 with 3-pin plug M8x1, threshold value comparator, 1 switching output PNP, N/O contact

Variant AD8:
SDE5-D10-C-...-P-M8 with 3-pin plug M8x1, threshold value comparator, 1 switching output PNP, N/C contact

Variant AD9:
SDE5-D10-O3-...-P-M8 with 3-pin plug M8x1, window comparator, 1 switching output PNP, N/O contact

Variant AD10:
SDE5-D10-C3-...-P-M8 with 3-pin plug M8x1, window comparator, 1 switching output PNP, N/C contact

Type	B2	B3	D1	D6	L5	L6
MS4-EM1-⅛-...-AD1/AD2	21	82.6	G⅛	M8x1	35.1	46.7
MS4-EM1-¼-...-AD1/AD2			G¼			
MS4-EM1-⅛-...-AD3/AD4	21	82.6	G⅛	M12x1	35.1	55.8
MS4-EM1-¼-...-AD3/AD4			G¼			
MS4-EM1-⅛-...-AD7/AD8/AD9/AD10	21	59.1	G⅛	M8x1	–	–
MS4-EM1-¼-...-AD7/AD8/AD9/AD10			G¼			
MS6-EM1-¼-...-AD1/AD2	31	103	G¼	M8x1	35.1	46.7
MS6-EM1-⅜-...-AD1/AD2			G⅜			
MS6-EM1-½-...-AD1/AD2			G½			
MS6-EM1-¼-...-AD3/AD4	31	103	G¼	M12x1	35.1	55.8
MS6-EM1-⅜-...-AD3/AD4			G⅜			
MS6-EM1-½-...-AD3/AD4			G½			
MS6-EM1-¼-...-AD7/AD8/AD9/AD10	31	79	G¼	M8x1	–	–
MS6-EM1-⅜-...-AD7/AD8/AD9/AD10			G⅜			
MS6-EM1-½-...-AD7/AD8/AD9/AD10			G½			

Note: This product conforms to ISO 1179-1 and ISO 228-1

On-off valves MS4/MS6-EM1, MS series

Technical data

Dimensions – Silencer Download CAD Data ➔ **www.festo.com/us/cad**

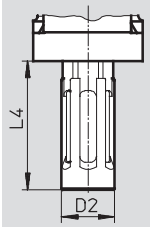

Type	D2	L4
MS4-EM1-...-S	19.5	47
MS6-EM1-...-S	28	106

Ordering data

Size	Connection	Standard		With silencer	
		Part No.	Type	Part No.	Type
MS4	G1/8	**541262**	**MS4-EM1-1/8[1)]**	**541263**	**MS4-EM1-1/8-S[1)]**
	G1/4	**541258**	**MS4-EM1-1/4[1)]**	**541259**	**MS4-EM1-1/4-S[1)]**
MS6	G1/4	**541271**	**MS6-EM1-1/4[1)]**	**541272**	**MS6-EM1-1/4-S[1)]**
	G3/8	**541275**	**MS6-EM1-3/8[1)]**	**541276**	**MS6-EM1-3/8-S[1)]**
	G1/2	**541267**	**MS6-EM1-1/2[1)]**	**541268**	**MS6-EM1-1/2-S[1)]**

1) Free of copper and PTFE

On-off valves MS4/MS6-EM1, MS series

Ordering data – Modular products

FESTO

M Mandatory data						
Module No.	**Series**	**Size**		**Function**		**Pneumatic connection**
541266 541279	MS	4 6		EM1		1/8, 1/4, 3/8, 1/2, AGA, AGB, AGC, AGD, AGE
Order example						
541266	**MS**	**4**	**–**	**EM1**	**–**	**1/4**

Ordering table							
Grid dimension [mm]		40	62	Conditions	Code		Enter code
M	Module No.	**541266**	**541279**				
	Series	Standard			**MS**		MS
	Size	4	6		**...**		
	Function	On-off valve, manual			**-EM1**		-EM1
	Pneumatic connection	Female thread G1/8	–		**-1/8**		
		Female thread G1/4	Female thread G1/4		**-1/4**		
		–	Female thread G3/8		**-3/8**		
		–	Female thread G1/2		**-1/2**		
		Connecting plate G1/8	–		**-AGA**		
		Connecting plate G1/4	Connecting plate G1/4		**-AGB**		
		Connecting plate G3/8	Connecting plate G3/8		**-AGC**		
		–	Connecting plate G1/2		**-AGD**		
↓		–	Connecting plate G3/4		**-AGE**		

Transfer order code

	MS		**–**	**EM1**	**–**	

➔ 0 **Options**

	Silencer		Pressure gauge/pressure gauge alternatives		Alternative pressure gauge scale		Type of mounting		Flow direction
	S		AG, A8, A4, RG, AD1 ... AD4, AD7 ... AD10		PSI, MPA		WP, WPM, WB, WBM		Z
–	**S**	–	**AG**	–	**PSI**	–	**WB**	–	**Z**

Ordering table

Grid dimension [mm]		40	62	Conditions	Code		Enter code
0	Silencer	Silencer			**-S**		
	Pressure gauge/pressure gauge alternatives	MS pressure gauge, bar (with adapter plate)	MS pressure gauge, bar		**-AG**		
		Adapter plate for EN pressure gauge 1⁄8, without pressure gauge	–		**-A8**		
		Adapter plate for EN pressure gauge 1⁄4, without pressure gauge			**-A4**		
		Integrated pressure gauge, red-green scale			**-RG**		
		Pressure sensor with LCD display, plug M8, 1 switching output PNP, 3-pin		1	**-AD1**		
		Pressure sensor with LCD display, plug M8, 1 switching output NPN, 3-pin		1	**-AD2**		
		Pressure sensor with LCD display, plug M12, 1 switching output PNP, 4-pin, analogue output 4 ... 20 mA		1	**-AD3**		
		Pressure sensor with LCD display, plug M12, 1 switching output NPN, 4-pin, analogue output 4 ... 20 mA		1	**-AD4**		
		Pressure sensor with operational status indicator, plug M8, threshold value comparator, PNP, N/O contact		1	**-AD7**		
		Pressure sensor with operational status indicator, plug M8, threshold value comparator, PNP, N/C contact		1	**-AD8**		
		Pressure sensor with operational status indicator, plug M8, window comparator, PNP, N/O contact		1	**-AD9**		
		Pressure sensor with operational status indicator, plug M8, window comparator, PNP, N/C contact		1	**-AD10**		
	Alternative pressure gauge scale	psi		2	**-PSI**		
		MPa		2	**-MPA**		
	Type of mounting	Mounting bracket		3	**-WP**		
		Mounting bracket		3	**-WPM**		
		Mounting bracket			**-WB**		
		Mounting bracket	–		**-WBM**		
	Flow direction	Flow direction from right to left			**-Z**		

1 **AD1 ... AD4, AD7 ... AD10** Measuring range max. 10 bar

2 **PSI, MPA** Only with pressure gauge AG or RG

3 **WP, WPM** Only with connecting plate AGA, AGB, AGC, AGD or AGE

Transfer order code

–		–		–		–		–	

On-off valves MS4/MS6-EE, MS series

Peripherals overview

FESTO

On-off valve MS4/MS6-EE

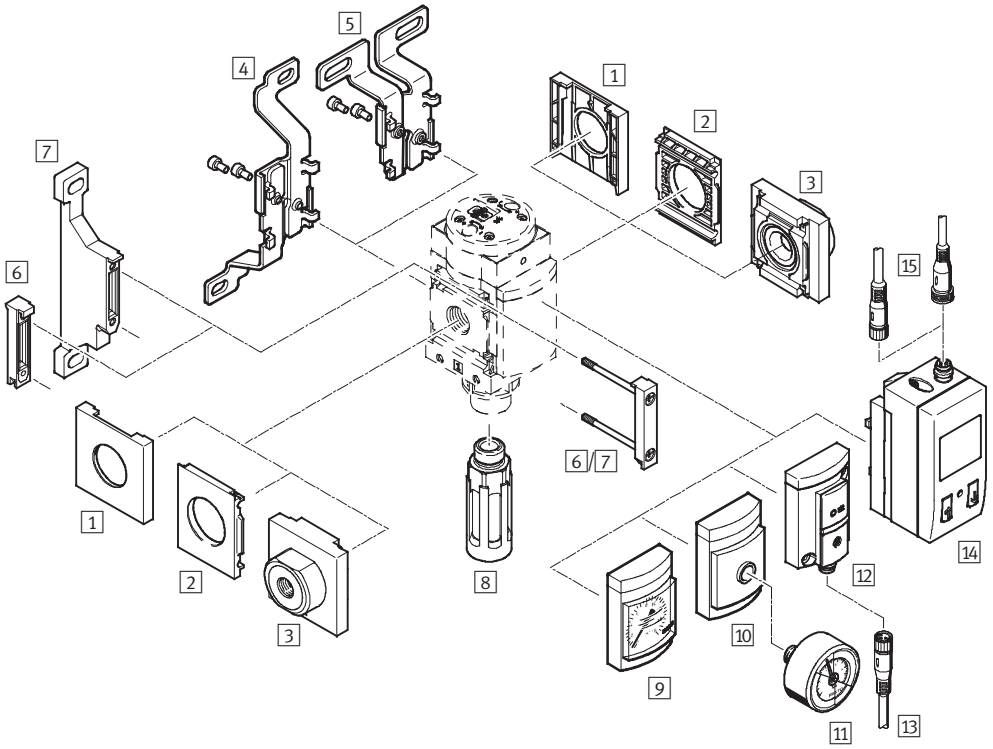

Note

Additional accessories:
- Module connector for combination with size MS4/MS6 or size MS9 ➔ Internet: amv, rmv, armv
- Adapter plate for mounting on profiles ➔ Internet: ipm-80, ipm-40-80, ipm-80-80

Supply voltage V24/10V24/V110/V230	Supply voltage 10V24P

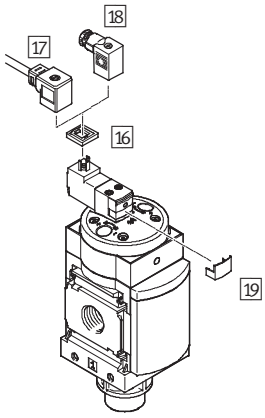

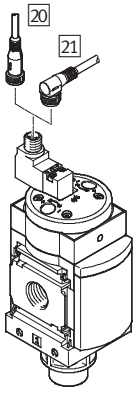

On-off valves MS4/MS6-EE, MS series

Peripherals overview

FESTO

Mounting attachments and accessories						
		Individual device		Combination		→ Page/Internet
		Without connecting plate	With connecting plate	Without connecting plate	With connecting plate	
1	Cover cap MS4/6-END	■	–	■	–	ms4-end, ms6-end
2	Mounting plate MS4/6-AEND	■1)	–	■1)	–	ms4-aend, ms6-aend
3	Connecting plate MS4/6-AG...	–	■1)	–	■1)	ms4-ag, ms6-ag
4	Mounting bracket MS4/6-WB	■	■	–	–	ms4-wb, ms6-wb
5	Mounting bracket MS4-WBM	■	■	–	–	ms4-wbm
6	Module connector MS4/6-MV	–	■	■	■	ms4-mv, ms6-mv
7	Mounting bracket MS4/6-WP	■	■	■	■	ms4-wp, ms6-wp
	Mounting bracket (not illustrated) MS4/6-WPB/WPE/WPM	■	■	■	■	ms4-wp, ms6-wp
8	Silencer U	■	■	■	■	93
9	MS pressure gauge AG/RG	■	■	■	■	28
10	Adapter plate for EN pressure gauge 1/8/1/4 A8/A4	■	■	■	■	28
11	Pressure gauge MA	■	■	■	■	93
12	Pressure sensor without display AD7 ... AD10	■	■	■	■	28
13	Connecting cable NEBU-M8...-LE3	■	■	■	■	93
14	Pressure sensor with display AD1 ... AD4	■	■	■	■	28
15	Connecting cable NEBU-M8...-LE3/NEBU-M12...-LE4	■	■	■	■	93
16	Illuminating seal MEB-LD	■	■	■	■	92
17	Plug socket with cable KMEB	■	■	■	■	92
18	Plug socket MSSD-EB	■	■	■	■	92
19	Locking clip CPV18-HV	■	■	■	■	92
20	Connecting cable NEBU-M12G5	■	■	■	■	93
21	Connecting cable NEBU-M12W5	■	■	■	■	93

1) Module connector MS4/6-MV 6 or mounting bracket MS4/6-WP/WPB/WPE/WPM 7 is required for mounting.

New
Variant 10V24P

On-off valves MS4/MS6-EE, MS series

Type codes

MS	6	–	EE	–	½	–	V110	–	

Series	
MS	Standard service unit

Size	
4	Grid dimension 40 mm
6	Grid dimension 62 mm

Service function	
EE	Solenoid actuated on-off valve

Pneumatic connection	
MS4	
⅛	Female thread G⅛
¼	Female thread G¼
MS6	
¼	Female thread G¼
⅜	Female thread G⅜
½	Female thread G½

Supply voltage	
10V24	Supply voltage 24 V DC
V110	Supply voltage 110 V AC
V230	Supply voltage 230 V AC

Silencer	
	Without silencer
S	Silencer

Additional variants can be ordered using the modular system ➔ 28

- Connecting plates
- Supply voltage
- Pressure gauge/pressure gauge alternatives
- Alternative pressure gauge scale
- Type of mounting
- EU Certification
- Flow direction

New
Variant 10V24P

On-off valves MS4/MS6-EE, MS series

Technical data

FESTO

Function

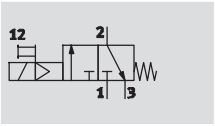

Flow rate
1,000 ... 7,000 l/min
Temperature range
–10 ... +60 °C
Pressure
4 ... 18 bar

- Solenoid actuated on-off valve for pressurising and venting pneumatic installations
- With solenoid coil without plug socket
- Three voltage ranges can be selected
- Ducted exhaust possible via a threaded connection with silencer
- Non-detenting and detenting manual override (variant 10V24: only non-detenting)
- Solenoid actuator can be repositioned by 180°
- Optional pressure sensor
- Optional device variant EX2 for use in potentially explosive areas in zones 2 and 22

General technical data						
Size	MS4		MS6			
Pneumatic connection 1, 2	G⅛	G¼	G¼	G⅜	G½	
Pneumatic connection 3	G¼		G½			
Design	Piston spool valve					
Type of mounting	Via accessories					
	In-line installation					
Assembly position	Any					
Pressure indicator	Via pressure sensor for displaying output pressure via LCD display and electrical output					
	Via pressure sensor for displaying output pressure via operational status indicator and electrical output					
	Via pressure gauge for displaying output pressure					
	Via pressure gauge with red/green scale for displaying output pressure					
	G¼ prepared					
	G⅛ prepared		–			
Valve function	3/2-way valve, single solenoid, closed					
Exhaust function	Without flow control					
Type of reset	Mechanical spring					
Switching position display	Via accessories					
Pilot control mode	Piloted					
Pilot air supply	Internal					
Direction of flow	Non-reversible					
C value [l/(s*bar)]	4.5	9.5	11.0	22.0	29.0	
b value	0.5	0.44	0.5	0.5	0.4	

Note: This product conforms to ISO 1179-1 and ISO 228-1

Electrical data		
Coil characteristics	V24	24 V DC: 1.5 W; perm. voltage fluctuations –25%/+10%
	10V24	24 V DC: 2.5 W; perm. voltage fluctuations ±10%
	10V24P	24 V DC: 1.8 W; perm. voltage fluctuations –15%/+10%
	V110	110 V AC: 50/60 Hz; pick-up power 3.0 W; holding power 2.4 W; perm. voltage fluctuations ±10%
	V230	230 V AC: 50/60 Hz; pick-up power 3.0 W; holding power 2.4 W; perm. voltage fluctuations –14%/+10%
Electrical connection	V24, 10V24, V110, V230	Plug, square design to EN 175301-803, type C
	10V24P	M12x1 to IEC 61076-2-101
Protection class for solenoid coil		IP65
Duty cycle [%]		100

New
Variant 10V24P

On-off valves MS4/MS6-EE, MS series

Technical data

Standard nominal flow rate qnN[1] [l/min]					
Size	MS4		MS6		
Pneumatic connection	G⅛	G¼	G¼	G⅜	G½
In main flow direction 1 → 2	1,000	2,000	2,600	5,500	7,000
In relief direction 2 → 3	1,600	1,600	7,000	6,200	5,500

1) Measured at p1 = 6 bar and p2 = 5 bar, Δp = 1 bar

Operating and environmental conditions							
Variant		Coil parameter V24, V110, V230		Coil parameter 10V24, 10V24P		Pressure sensor AD...	
Size		MS4	MS6	MS4	MS6	MS4	MS6
Operating pressure	[bar]	4 ... 14 (4 ... 10 with silencer S)	4 ... 18 (4 ... 10 with silencer S)	4 ... 10	4 ... 10	4 ... 10	4 ... 10
Operating medium		Compressed air in accordance with ISO 8573-1:2010 [7:4:4]					
		Inert gases					
Note on operating/pilot medium		Operation with lubricated medium possible (in which case lubricated operation will always be required)					
Ambient temperature	[°C]	–10 ... +60	–10 ... +60	–10 ... +50	–10 ... +50	0 ... +50	0 ... +50
Temperature of medium	[°C]	–10 ... +60	–10 ... +60	–10 ... +50	–10 ... +50	0 ... +50	0 ... +50
Corrosion resistance	CRC[1]	2					

1) Corrosion resistance class 2 according to Festo standard 940 070
Components requiring moderate corrosion resistance. Externally visible parts with primarily decorative surface requirements which are in direct contact with a normal industrial environment or media such as coolants or lubricating agents.

ATEX	
Variant	EX2
ATEX category gas	II 3G
Ex-ignition protection type gas	Ex nA IIC T4 X Gc
ATEX category dust	II 3D
EX-ignition protection type dust	Ex tc IIIC T105°C X Dc IP65
ATEX ambient temperature	–10 °C ≤ Ta ≤ +60 °C
CE mark (see declaration of conformity)	To EU Explosion Protection Directive (ATEX)
	To EU EMC Directive
	To EU Low Voltage Directive

Weights [g]		
Size	MS4	MS6
On-off valve	273	740
On-off valve with silencer S	289	816

Materials

Sectional view

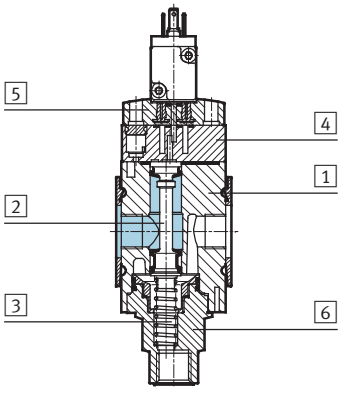

On-off valve		
1	Body	Die-cast aluminium
2	Piston spool	NBR/aluminium
3	Springs	High-alloy stainless steel
4	End cap	PA
5	Top plate	PA
6	Socket end connection	PA
–	Seals	NBR
Note on materials		RoHS-compliant
		Free of copper and PTFE (not with variants AG, 10V24, 10V24P or AD...)

On-off valves MS4/MS6-EE, MS series

Technical data

FESTO

Dimensions – Basic version Download CAD Data ➔ **www.festo.com/us/cad**

With female thread, with cover plate

Supply voltage V24/10V24/V110/V230

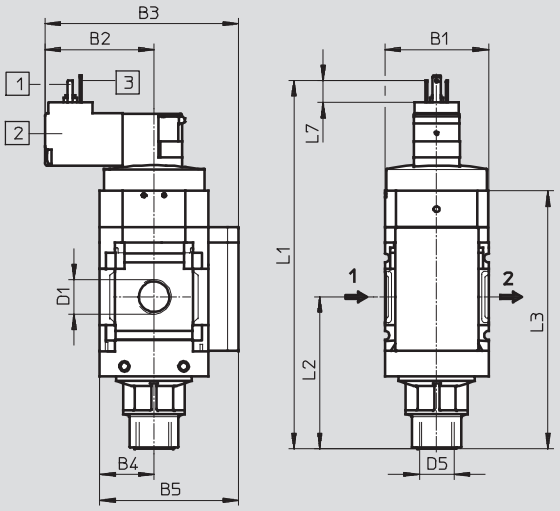

Supply voltage 10V24P

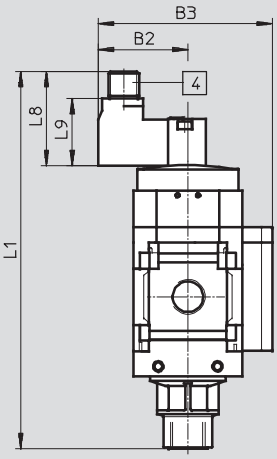

1 = Unused
2 = Unused
3 = com (–)
4 = Signal (+) solenoid 14

1 Plug connection to EN 175301-803
2 Solenoid actuator can be repositioned by 180°, i.e. solenoid points to the front
3 PIN only with solenoid actuators 110 V and 230 V
4 Electrical connection to IEC 61076-2-101, plug M12x1, 2 pin for NEBU-M12

➔ Flow direction

Supply voltage V24/V110/V230

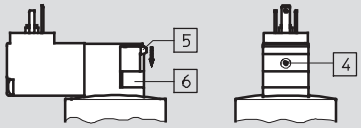

Note

For detenting manual override remove the grey cover plate 6 and press the slide 5 downwards.

Supply voltage 10V24/10V24P

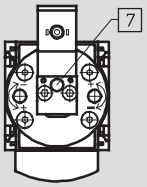

4 Manual override, non-detenting (delivery status)
5 Slide
6 Cover plate
7 Non-detenting and detenting manual override (variant 10V24: only non-detenting)

Type	B1	B2		B3		B4	B5	D1	D5
		V24/V110/V230	10V24/10V24P	V24/V110/V230	10V24/10V24P				
MS4-EE-⅛	40	42.2	34.9	75.2	67.9	21	54	G⅛	G¼
MS4-EE-¼								G¼	
MS6-EE-¼	62	52	44.7	97	89.7	31	76	G¼	G½
MS6-EE-⅜								G⅜	
MS6-EE-½								G½	

Type	L1			L2	L3	L7	L8	L9
	V24/V110/V230	10V24	10V24P					
MS4-EE-⅛	142.8	140.4	145.2	58.9	100	8.6	36.7	26.1
MS4-EE-¼								
MS6-EE-¼	185.6	183.2	188	84	143	8.6	36.7	26.1
MS6-EE-⅜								
MS6-EE-½								

Note: This product conforms to ISO 1179-1 and ISO 228-1

On-off valves MS4/MS6-EE, MS series

Technical data

FESTO

Dimensions – Pressure gauge/pressure gauge alternatives Download CAD Data ➔ **www.festo.com/us/cad**

Integrated MS pressure gauge with standard scale AG or red-green scale RG, display unit [bar]

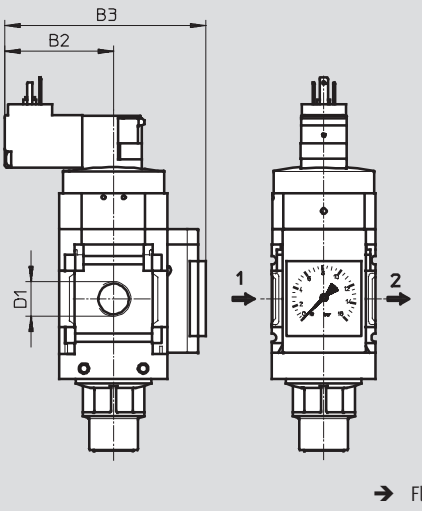

➔ Flow direction

Adapter plate A8/A4 for EN pressure gauge ⅛/¼, without pressure gauge

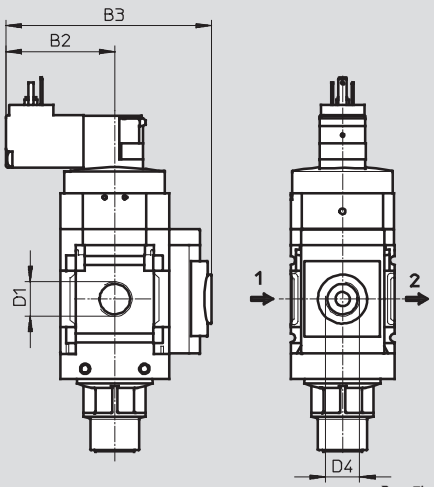

➔ Flow direction

Type	B2	B2	B3	B3	D1	D4
	V24/V110/V230	10V24/10V24P	V24/V110/V230	10V24/10V24P		
MS4-EE-⅛-...-AG	42.2	34.9	86.2	78.9	G⅛	–
MS4-EE-¼-...-AG					G¼	
MS4-EE-⅛-...-RG	42.2	34.9	87.7	80.4	G⅛	–
MS4-EE-¼-...-RG					G¼	
MS4-EE-⅛-...-A8	42.2	34.9	79.7	72.4	G⅛	G⅛
MS4-EE-¼-...-A8					G¼	
MS4-EE-⅛-...-A4	42.2	34.9	79.7	72.4	G⅛	G¼
MS4-EE-¼-...-A4					G¼	
MS6-EE-¼-...-AG	52	44.7	106	98.7	G¼	–
MS6-EE-⅜-...-AG					G⅜	
MS6-EE-½-...-AG					G½	
MS6-EE-¼-...-RG	52	44.7	107.5	100.2	G¼	–
MS6-EE-⅜-...-RG					G⅜	
MS6-EE-½-...-RG					G½	
MS6-EE-¼-...-A4	52	44.7	99.6	92.3	G¼	G¼
MS6-EE-⅜-...-A4					G⅜	
MS6-EE-½-...-A4					G½	

Note: This product conforms to ISO 1179-1 and ISO 228-1

On-off valves MS4/MS6-EE, MS series

Technical data

FESTO

Dimensions – Pressure gauge/pressure gauge alternatives Download CAD Data ➔ **www.festo.com/us/cad**

Pressure sensor with LCD display AD1 ... AD4 Technical data ➔ Internet: sde1

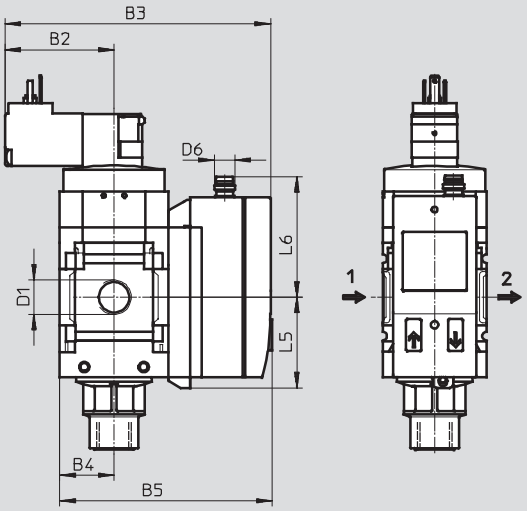

➔ Flow direction

Variant AD1:
SDE1-D10-G2-MS-L-P1-M8 with 3-pin plug M8x1, 1 switching output PNP

Variant AD2:
SDE1-D10-G2-MS-L-N1-M8 with 3-pin plug M8x1, 1 switching output NPN

Variant AD3:
SDE1-D10-G2-MS-L-PI-M12 with 4-pin plug M12x1, 1 switching output PNP and 4 ... 20 mA analogue

Variant AD4:
SDE1-D10-G2-MS-L-NI-M12 with 4-pin plug M12x1, 1 switching output NPN and 4 ... 20 mA analogue

Type	B2		B3		B4	B5	D1	D6	L5	L6
	V24/ V110/ V230	10V24/ 10V24P	V24/ V110/ V230	10V24/ 10V24P						
MS4-EE-⅛-...-AD1/AD2	42.2	34.9	103.8	96.5	21	82.6	G⅛	M8x1	35.1	46.7
MS4-EE-¼-...-AD1/AD2							G¼			
MS4-EE-⅛-...-AD3/AD4	42.2	34.9	103.8	96.5	21	82.6	G⅛	M12x1	35.1	55.8
MS4-EE-¼-...-AD3/AD4							G¼			
MS6-EE-¼-...-AD1/AD2	52	44.7	124	116.7	31	103	G¼	M8x1	35.1	46.7
MS6-EE-⅜-...-AD1/AD2							G⅜			
MS6-EE-½-...-AD1/AD2							G½			
MS6-EE-¼-...-AD3/AD4	52	44.7	124	116.7	31	103	G¼	M12x1	35.1	55.8
MS6-EE-⅜-...-AD3/AD4							G⅜			
MS6-EE-½-...-AD3/AD4							G½			

Note: This product conforms to ISO 1179-1 and ISO 228-1

On-off valves MS4/MS6-EE, MS series

Technical data

FESTO

Dimensions – Pressure gauge/pressure gauge alternatives Download CAD Data ➔ **www.festo.com/us/cad**

Pressure sensor with operational status indicator AD7 ... AD10 Technical data ➔ Internet: sde5

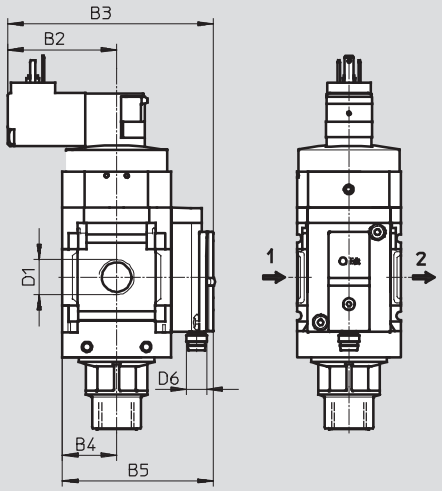

➔ Flow direction

Variant AD7:
SDE5-D10-O-...-P-M8 with 3-pin plug M8x1, threshold value comparator, 1 switching output PNP, N/O contact

Variant AD8:
SDE5-D10-C-...-P-M8 with 3-pin plug M8x1, threshold value comparator, 1 switching output PNP, N/C contact

Variant AD9:
SDE5-D10-O3-...-P-M8 with 3-pin plug M8x1, window comparator, 1 switching output PNP, N/O contact

Variant AD10:
SDE5-D10-C3-...-P-M8 with 3-pin plug M8x1, window comparator, 1 switching output PNP, N/C contact

Type	B2		B3		B4	B5	D1	D6
	V24/ V110/ V230	10V24/ 10V24P	V24/ V110/ V230	10V24/ 10V24P				
MS4-EE-⅛-...-AD7/AD8/AD9/AD10	42.2	34.9	80.3	73	21	59.1	G⅛	M8x1
MS4-EE-¼-...-AD7/AD8/AD9/AD10							G¼	
MS6-EE-¼-...-AD7/AD8/AD9/AD10	52	44.7	100.2	92.9	31	79	G¼	M8x1
MS6-EE-⅜-...-AD7/AD8/AD9/AD10							G⅜	
MS6-EE-½-...-AD7/AD8/AD9/AD10							G½	

Note: This product conforms to ISO 1179-1 and ISO 228-1

On-off valves MS4/MS6-EE, MS series

Technical data

FESTO

Dimensions – Silencer Download CAD Data ➔ **www.festo.com/us/cad**

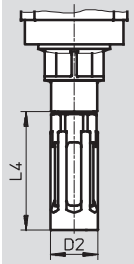

Type	D2	L4
MS4-EE-...-S	19.5	48.5
MS6-EE-...-S	28	106

Ordering data

Size	Connection	Without silencer		With silencer	
		Part No.	Type	Part No.	Type
Supply voltage 24 V DC					
MS4	G1/8	**542580**	**MS4-EE-1/8-10V24**	**542600**	**MS4-EE-1/8-10V24-S**
	G1/4	**542578**	**MS4-EE-1/4-10V24**	**542598**	**MS4-EE-1/4-10V24-S**
MS6	G1/4	**542584**	**MS6-EE-1/4-10V24**	**542604**	**MS6-EE-1/4-10V24-S**
	G3/8	**542586**	**MS6-EE-3/8-10V24**	**542606**	**MS6-EE-3/8-10V24-S**
	G1/2	**542582**	**MS6-EE-1/2-10V24**	**542602**	**MS6-EE-1/2-10V24-S**
Supply voltage 110 V AC					
MS4	G1/8	**529541**	**MS4-EE-1/8-V110**[1)]	**538725**	**MS4-EE-1/8-V110-S**[1)]
	G1/4	**529535**	**MS4-EE-1/4-V110**[1)]	**538719**	**MS4-EE-1/4-V110-S**[1)]
MS6	G1/4	**529829**	**MS6-EE-1/4-V110**[1)]	**538737**	**MS6-EE-1/4-V110-S**[1)]
	G3/8	**529835**	**MS6-EE-3/8-V110**[1)]	**538743**	**MS6-EE-3/8-V110-S**[1)]
	G1/2	**529823**	**MS6-EE-1/2-V110**[1)]	**538731**	**MS6-EE-1/2-V110-S**[1)]
Supply voltage 230 V AC					
MS4	G1/8	**529543**	**MS4-EE-1/8-V230**[1)]	**538727**	**MS4-EE-1/8-V230-S**[1)]
	G1/4	**529537**	**MS4-EE-1/4-V230**[1)]	**538721**	**MS4-EE-1/4-V230-S**[1)]
MS6	G1/4	**529831**	**MS6-EE-1/4-V230**[1)]	**538739**	**MS6-EE-1/4-V230-S**[1)]
	G3/8	**529837**	**MS6-EE-3/8-V230**[1)]	**538745**	**MS6-EE-3/8-V230-S**[1)]
	G1/2	**529825**	**MS6-EE-1/2-V230**[1)]	**538733**	**MS6-EE-1/2-V230-S**[1)]

1) Free of copper and PTFE

New
Variant 10V24P

On-off valves MS4/MS6-EE, MS series

Ordering data – Modular products

FESTO

M **Mandatory data**

Module No.	Series	Size		Function		Pneumatic connection		Supply voltage	
527709 527682	MS	4 6		EE		1/8, 1/4, 3/8, 1/2, AGA, AGB, AGC, AGD, AGE		V24, 10V24, 10V24P, V110, V230	
Order example									
527709	**MS**	**4**	**–**	**EE**	**–**	**AGB**	**–**	**V24**	**–**

Ordering table

Grid dimension [mm]		40	62	Conditions	Code		Enter code
M	Module No.	**527709**	**527682**				
	Series	Standard			**MS**		MS
	Size	4	6		**...**		
	Function	On-off valve, electrical			**-EE**		-EE
	Pneumatic connection	Female thread G1/8	–	5	**-1/8**		
		Female thread G1/4	Female thread G1/4	5	**-1/4**		
		–	Female thread G3/8	5	**-3/8**		
		–	Female thread G1/2	5	**-1/2**		
		Connecting plate G1/8	–		**-AGA**		
		Connecting plate G1/4	Connecting plate G1/4		**-AGB**		
		Connecting plate G3/8	Connecting plate G3/8		**-AGC**		
		–	Connecting plate G1/2		**-AGD**		
		–	Connecting plate G3/4		**-AGE**		
	Supply voltage	24 V DC (pin allocation to EN 175301) 4 ... 14 bar	4 ... 18 bar		**-V24**		
		24 V DC (pin allocation to EN 175301) 4 ... 10 bar	4 ... 10 bar	1 5	**-10V24**		
		24 V DC, M12 to IEC 61076-2-101 4 ... 10 bar	4 ... 10 bar	1 5	**-10V24P**		
		110 V AC (pin allocation to EN 175301) 4 ... 14 bar	4 ... 18 bar	5	**-V110**		
		230 V AC (pin allocation to EN 175301) 4 ... 14 bar	4 ... 18 bar	5	**-V230**		

1 **10V24, 10V24P**
Max. operating pressure 10 bar

Transfer order code

	MS		**–**	**EE**	**–**		**–**		

On-off valves MS4/MS6-EE, MS series

FESTO

Ordering data – Modular products

➔ [0] **Options**

	Silencer		Pressure gauge/pressure gauge alternatives		Alternative pressure gauge scale		Type of mounting		EU certification		Flow direction
	S		AG, A8, A4, RG, AD1, AD2, AD3, AD4, AD7, AD8, AD9, AD10		PSI, MPA		WP, WPM, WB, WBM		EX2		Z
–	**S**	–	**AG**	–	**PSI**	–	**WP**	–		–	**Z**

Ordering table

Grid dimension [mm]		40	62	Conditions	Code		Enter code
[0]	Silencer	Silencer			**-S**		
	Pressure gauge/pressure gauge alternatives	MS pressure gauge (with adapter plate)	MS pressure gauge		**-AG**		
		Adapter plate for EN pressure gauge 1/8, without pressure gauge	–		**-A8**		
		Adapter plate for EN pressure gauge 1/4, without pressure gauge			**-A4**		
		Integrated pressure gauge, red-green scale			**-RG**		
		Pressure sensor with LCD display, plug M8, 1 switching output PNP, 3-pin		[2] [5]	**-AD1**		
		Pressure sensor with LCD display, plug M8, 1 switching output NPN, 3-pin		[2] [5]	**-AD2**		
		Pressure sensor with LCD display, plug M12, 1 switching output PNP, 4-pin, analogue output 4 ... 20 mA		[2] [5]	**-AD3**		
		Pressure sensor with LCD display, plug M12, 1 switching output NPN, 4-pin, analogue output 4 ... 20 mA		[2] [5]	**-AD4**		
		Pressure sensor with operational status indicator, plug M8, threshold value comparator, PNP, N/O contact		[2] [5]	**-AD7**		
		Pressure sensor with operational status indicator, plug M8, threshold value comparator, PNP, N/C contact		[2] [5]	**-AD8**		
		Pressure sensor with operational status indicator, plug M8, window comparator, PNP, N/O contact		[2] [5]	**-AD9**		
		Pressure sensor with operational status indicator, plug M8, window comparator, PNP, N/C contact		[2] [5]	**-AD10**		
	Alternative pressure gauge scale	psi		[3]	**-PSI**		
		MPa		[3]	**-MPA**		
	Type of mounting	Mounting bracket		[4]	**-WP**		
		Mounting bracket		[4] [5]	**-WPM**		
		Mounting bracket			**-WB**		
		Mounting bracket	–		**-WBM**		
	EU certification	II 3GD to EU Directive 94/9/EG			**-EX2**		
	Flow direction	Flow direction from right to left			**-Z**		

[2] **AD1 ... AD4, AD7 ... AD10** Measuring range max. 10 bar

[3] **PSI, MPA** Only in combination with pressure gauge AG or RG

[4] **WP, WPM** Only with connecting plate AGA, AGB, AGC, AGD or AGE

[5] **1/8, 1/4, 3/8, 1/2, 10V24, 10V24P, V110, V230, AD1 ... AD4, AD7 ... AD10, WPM** Not with EU EX2 certification

Transfer order code

–		–		–		–		–		–	

Soft-start valves MS4/MS6-DL, MS series

Peripherals overview

Soft-start valve MS4/MS6-DL

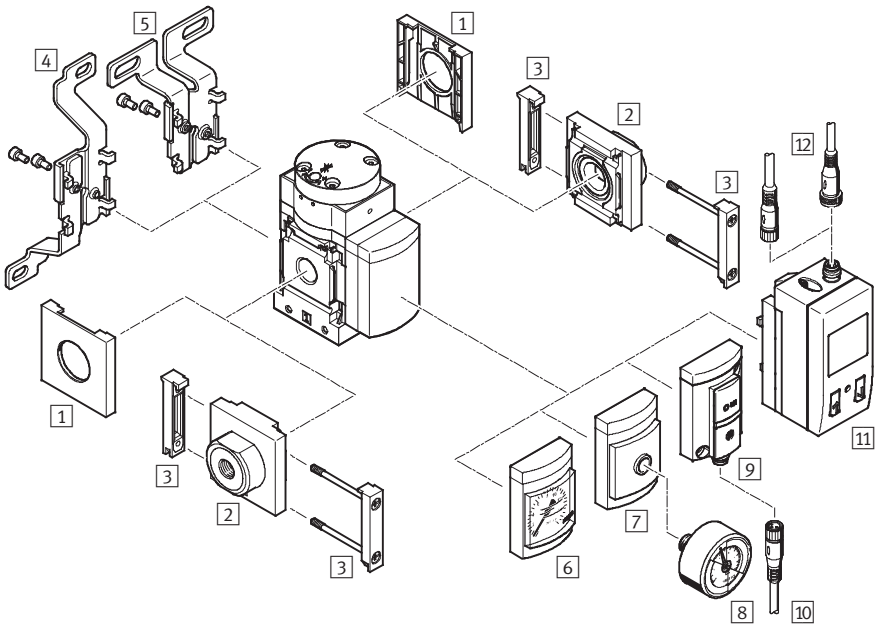

Note

Additional accessories:
- Module connector for combination with size MS4/MS6 or size MS9 ➔ Internet: amv, rmv, armv
- Adapter plate for mounting on profiles ➔ Internet: ipm-80, ipm-40-80, ipm-80-80

Mounting attachments and accessories

		Individual device		Combination		➔ Page/Internet
		Without connecting plate	With connecting plate	Without connecting plate	With connecting plate	
1	Cover cap MS4/6-END	■	–	■	–	ms4-end, ms6-end
2	Connecting plate MS4/6-AG...	–	■	–	■	ms4-ag, ms6-ag
3	Module connector MS4/6-MV	–	■	■	■	ms4-mv, ms6-mv
4	Mounting bracket MS4/6-WB	■	■	–	–	ms4-wb, ms6-wb
5	Mounting bracket MS4-WBM	■	■	–	–	ms4-wbm
6	MS pressure gauge AG/RG	■	■	■	■	36
7	Adapter plate for EN pressure gauge 1⁄8/1⁄4 A8/A4	■	■	■	■	36
8	Pressure gauge MA	■	■	■	■	93
9	Pressure sensor without display AD7 ... AD10	■	■	■	■	36
10	Connecting cable NEBU-M8...-LE3	■	■	■	■	93
11	Pressure sensor with display AD1 ... AD4	■	■	■	■	36
12	Connecting cable NEBU-M8...-LE3/NEBU-M12...-LE4	■	■	■	■	93
–	Mounting bracket MS4/6-WP/WPB/WPE/WPM	–	■	■	■	ms4-wp, ms6-wp

Soft-start valves MS4/MS6-DL, MS series

Type codes

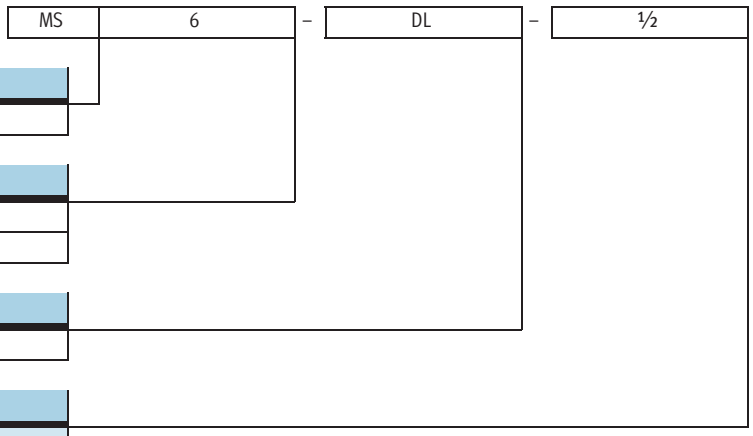

Series	
MS	Standard service unit

Size	
4	Grid dimension 40 mm
6	Grid dimension 62 mm

Service function	
DL	Pneumatically actuated soft-start valve

Pneumatic connection	
MS4	
⅛	Female thread G⅛
¼	Female thread G¼
MS6	
¼	Female thread G¼
⅜	Female thread G⅜
½	Female thread G½

Additional variants can be ordered using the modular system ➔ 36

- Connecting plates
- Pressure gauge/pressure gauge alternatives
- Alternative pressure gauge scale
- Type of mounting
- Flow direction

Soft-start valves MS4/MS6-DL, MS series

Technical data

Function

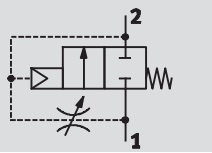

Flow rate

1,000 ... 6,450 l/min

Temperature range

–10 ... +60 °C

Pressure

4 ... 18 bar

The duration of the pressure build-up is adjusted using the restrictor attached to the valve cap.

The output pressure p2 rises slowly in accordance with the restrictor setting. The main seat opens when the switch-through pressure is reached.

- Pneumatically actuated soft-start valve for slowly pressurising and venting pneumatic installations (for use with on-off valves EM1 and EE)
- The drives advance slowly and reliably into the initial position
- Sudden and erratic movements are avoided
- Pressure switching approx. 50% of operating pressure
- Adjustable switching time delay
- Optional pressure sensor

General technical data					
Size	MS4		MS6		
Pneumatic connection 1, 2	G⅛	G¼	G¼	G⅜	G½
Design	Piston poppet valve				
Type of mounting	Via accessories				
	In-line installation				
Assembly position	Any				
Pressure indicator	Via pressure sensor for displaying output pressure via LCD display and electrical output				
	Via pressure sensor for displaying output pressure via operational status indicator and electrical output				
	Via pressure gauge for displaying output pressure				
	Via pressure gauge with red/green scale for displaying output pressure				
	G¼ prepared				
	G⅛ prepared		–		
Valve function	2/2-way valve				
Exhaust function	Flow control				
Type of reset	Mechanical spring				
Pilot control mode	Direct				
Pilot air supply	External				
Direction of flow	Non-reversible				
C value [l/(s*bar)]	4.6	9.6	11.22	21.05	28.97
b value	0.5	0.45	0.54	0.48	0.39

Note: This product conforms to ISO 1179-1 and ISO 228-1

Standard nominal flow rate qnN[1] [l/min]					
Size	MS4		MS6		
Pneumatic connection	G⅛	G¼	G¼	G⅜	G½
In main flow direction 1 → 2	1,000	2,000	2,800	5,050	6,450
In relief direction 2 → 1	1,000	2,000	2,800	5,050	6,400

1) Measured at p1 = 6 bar and p2 = 5 bar, Δp = 1 bar

Soft-start valves MS4/MS6-DL, MS series

Technical data

Operating and environmental conditions					
Variant		Standard		Pressure sensor AD...	
Size		MS4	MS6	MS4	MS6
Operating pressure	[bar]	4 ... 14	4 ... 18	4 ... 10	4 ... 10
Operating medium		Compressed air in accordance with ISO 8573-1:2010 [7:4:4]			
		Inert gases			
Note on operating/pilot medium		Operation with lubricated medium possible (in which case lubricated operation will always be required)			
Ambient temperature	[°C]	–10 ... +60	–10 ... +60	0 ... +50	0 ... +50
Temperature of medium	[°C]	–10 ... +60	–10 ... +60	0 ... +50	0 ... +50
Corrosion resistance	CRC[1)]	2			

1) Corrosion resistance class 2 according to Festo standard 940 070
Components requiring moderate corrosion resistance. Externally visible parts with primarily decorative surface requirements which are in direct contact with a normal industrial environment or media such as coolants or lubricating agents.

Weights [g]		
Size	MS4	MS6
Soft-start valve	213	650

Materials

Sectional view

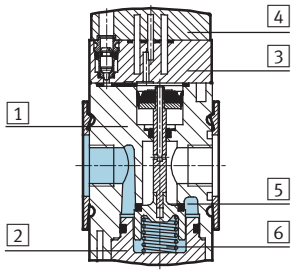

Soft-start valve	
1 Body	Die-cast aluminium
2 Base	PET
3 End cap	PA
4 Top plate	PA
5 Seat	Aluminium
6 Springs	Spring steel
– Seals	NBR
Note on materials	RoHS-compliant
	Free of copper and PTFE (not with variants AG or AD...)

Switching point – Pressure p as a function of time t

MS4

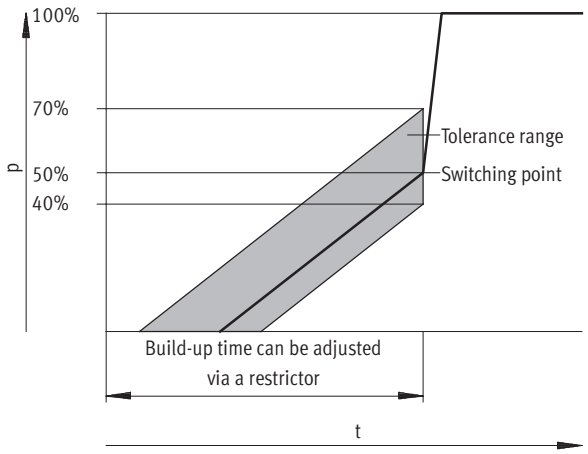

MS6

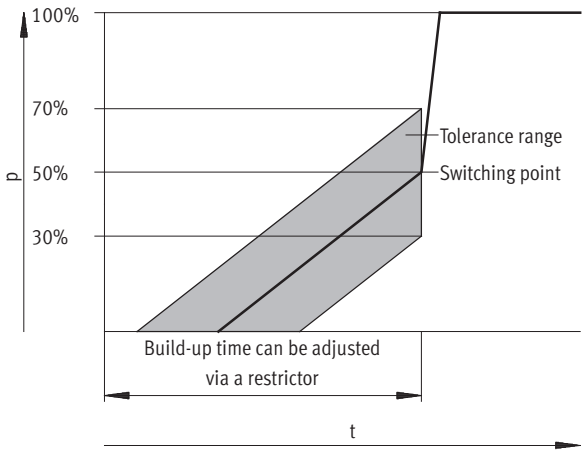

Note

The tolerance specification +20%/–10% of the switching point refers to the operating pressure p1.

Example: at an operating pressure of 4 bar a switching point of 1.6 bar to 2.8 bar is permitted.

Note

The tolerance specification +20%/–20% of the switching point refers to the operating pressure p1.

Example: at an operating pressure of 4 bar a switching point of 1.2 bar to 2.8 bar is permitted.

Dimensions – Basic version

Download CAD Data ➔ **www.festo.com/us/cad**

With female thread, with cover plate

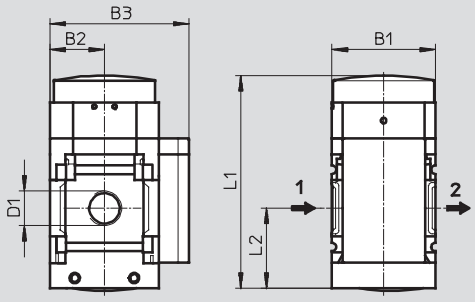

➔ Flow direction

Type	B1	B2	B3	D1	L1	L2
MS4-DL-⅛	40	21	54	G⅛	82.7	31
MS4-DL-¼				G¼		
MS6-DL-¼	62	31	76	G¼	108	45.5
MS6-DL-⅜				G⅜		
MS6-DL-½				G½		

Note: This product conforms to ISO 1179-1 and ISO 228-1

Dimensions – Pressure gauge/pressure gauge alternatives

Download CAD Data ➔ **www.festo.com/us/cad**

Integrated MS pressure gauge with standard scale AG or red-green scale RG, display unit [bar]

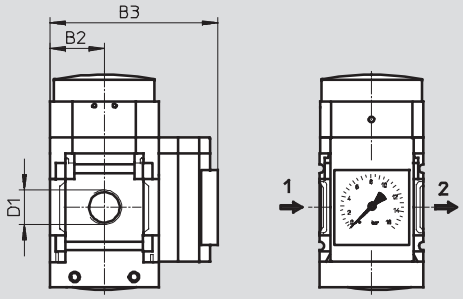

➔ Flow direction

Adapter plate A8/A4 for EN pressure gauge ⅛/¼, without pressure gauge

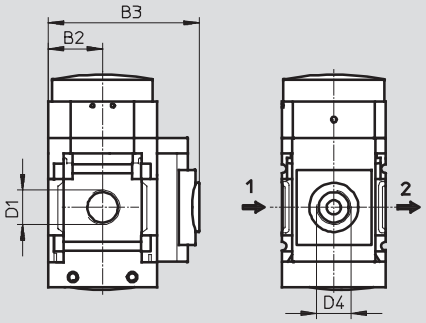

➔ Flow direction

Type	B2	B3	D1	D4
MS4-DL-⅛-...-AG	21	65	G⅛	–
MS4-DL-¼-...-AG			G¼	
MS4-DL-⅛-...-RG	21	66.5	G⅛	–
MS4-DL-¼-...-RG			G¼	
MS4-DL-⅛-...-A8	21	58.5	G⅛	G⅛
MS4-DL-¼-...-A8			G¼	
MS4-DL-⅛-...-A4	21	58.5	G⅛	G¼
MS4-DL-¼-...-A4			G¼	
MS6-DL-¼-...-AG	31	85	G¼	–
MS6-DL-⅜-...-AG			G⅜	
MS6-DL-½-...-AG			G½	
MS6-DL-¼-...-RG	31	86.5	G¼	–
MS6-DL-⅜-...-RG			G⅜	
MS6-DL-½-...-RG			G½	
MS6-DL-¼-...-A4	31	78.5	G¼	G¼
MS6-DL-⅜-...-A4			G⅜	
MS6-DL-½-...-A4			G½	

Note: This product conforms to ISO 1179-1 and ISO 228-1

Dimensions – Pressure gauge/pressure gauge alternatives Download CAD Data ➔ **www.festo.com/us/cad**

Pressure sensor with LCD display AD1 ... AD4 Technical data ➔ Internet: sde1

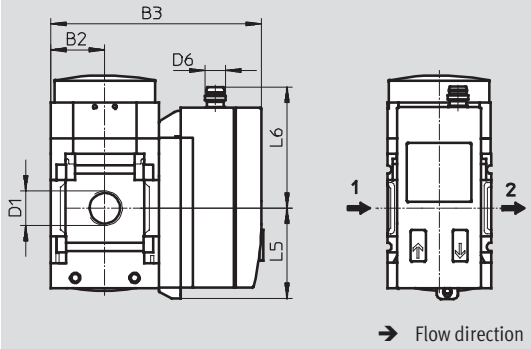

➔ Flow direction

Variant AD1:
SDE1-D10-G2-MS-L-P1-M8 with 3-pin plug M8x1, 1 switching output PNP

Variant AD2:
SDE1-D10-G2-MS-L-N1-M8 with 3-pin plug M8x1, 1 switching output NPN

Variant AD3:
SDE1-D10-G2-MS-L-PI-M12 with 4-pin plug M12x1, 1 switching output PNP and 4 ... 20 mA analogue

Variant AD4:
SDE1-D10-G2-MS-L-NI-M12 with 4-pin plug M12x1, 1 switching output NPN and 4 ... 20 mA analogue

Pressure sensor with operational status indicator AD7 ... AD10 Technical data ➔ Internet: sde5

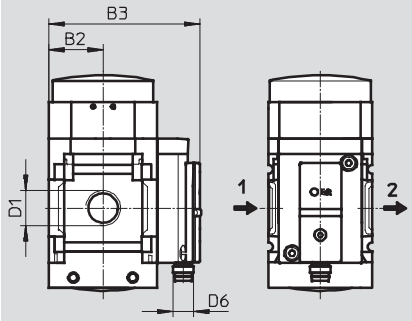

➔ Flow direction

Variant AD7:
SDE5-D10-O-...-P-M8 with 3-pin plug M8x1, threshold value comparator, 1 switching output PNP, N/O contact

Variant AD8:
SDE5-D10-C-...-P-M8 with 3-pin plug M8x1, threshold value comparator, 1 switching output PNP, N/C contact

Variant AD9:
SDE5-D10-O3-...-P-M8 with 3-pin plug M8x1, window comparator, 1 switching output PNP, N/O contact

Variant AD10:
SDE5-D10-C3-...-P-M8 with 3-pin plug M8x1, window comparator, 1 switching output PNP, N/C contact

Type	B2	B3	D1	D6	L5	L6
MS4-DL-⅛-...-AD1/AD2	21	82.6	G⅛	M8x1	35.1	46.7
MS4-DL-¼-...-AD1/AD2			G¼			
MS4-DL-⅛-...-AD3/AD4	21	82.6	G⅛	M12x1	35.1	55.8
MS4-DL-¼-...-AD3/AD4			G¼			
MS4-DL-⅛-...-AD7/AD8/AD9/AD10	21	59.1	G⅛	M8x1	–	–
MS4-DL-¼-...-AD7/AD8/AD9/AD10			G¼			
MS6-DL-¼-...-AD1/AD2	31	103	G¼	M8x1	35.1	46.7
MS6-DL-⅜-...-AD1/AD2			G⅜			
MS6-DL-½-...-AD1/AD2			G½			
MS6-DL-¼-...-AD3/AD4	31	103	G¼	M12x1	35.1	55.8
MS6-DL-⅜-...-AD3/AD4			G⅜			
MS6-DL-½-...-AD3/AD4			G½			
MS6-DL-¼-...-AD7/AD8/AD9/AD10	31	79	G¼	M8x1	–	–
MS6-DL-⅜-...-AD7/AD8/AD9/AD10			G⅜			
MS6-DL-½-...-AD7/AD8/AD9/AD10			G½			

Note: This product conforms to ISO 1179-1 and ISO 228-1

Ordering data

Size	Connection	Part No.	Type
MS4	G⅛	**529533**	**MS4-DL-⅛**[1)]
	G¼	**529531**	**MS4-DL-¼**[1)]
MS6	G¼	**529819**	**MS6-DL-¼**[1)]
	G⅜	**529821**	**MS6-DL-⅜**[1)]
	G½	**529817**	**MS6-DL-½**[1)]

1) Free of copper and PTFE

Soft-start valves MS4/MS6-DL, MS series

Ordering data – Modular products

FESTO

M Mandatory data						
Module No.	**Series**	**Size**		**Function**		**Pneumatic connection**
527711 527684	MS	4 6		DL		1/8, 1/4, 3/8, 1/2, AGA, AGB, AGC, AGD, AGE
Order example						
527711	**MS**	**4**	**–**	**DL**	**–**	**AGA**

Ordering table

Grid dimension [mm]		40	62	Conditions	Code		Enter code
M	Module No.	**527711**	**527684**				
	Series	Standard			**MS**		MS
	Size	4	6		**...**		
	Function	Soft-start valve, pneumatic			**-DL**		-DL
	Pneumatic connection	Female thread G1/8	–		**-1/8**		
		Female thread G1/4	Female thread G1/4		**-1/4**		
		–	Female thread G3/8		**-3/8**		
		–	Female thread G1/2		**-1/2**		
		Connecting plate G1/8	–		**-AGA**		
		Connecting plate G1/4	Connecting plate G1/4		**-AGB**		
		Connecting plate G3/8	Connecting plate G3/8		**-AGC**		
		–	Connecting plate G1/2		**-AGD**		
↓		–	Connecting plate G3/4		**-AGE**		

Transfer order code

	MS		**–**	**DL**	**–**	

➔ 0 **Options**

	Pressure gauge/pressure gauge alternatives		Alternative pressure gauge scale		Type of mounting		Flow direction
	AG, A8, A4, RG, AD1 ... AD4, AD7 ... AD10		PSI, MPA		WP, WPM, WB, WBM		Z
–	**AG**	–	**PSI**	–	**WB**	–	**Z**

Ordering table

Grid dimension [mm]		40	62	Conditions	Code		Enter code
0	Pressure gauge/pressure gauge alternatives	MS pressure gauge, bar (with adapter plate)	MS pressure gauge, bar		**-AG**		
		Adapter plate for EN pressure gauge ⅛, without pressure gauge	–		**-A8**		
		Adapter plate for EN pressure gauge ¼, without pressure gauge			**-A4**		
		Integrated pressure gauge, red-green scale			**-RG**		
		Pressure sensor with LCD display, plug M8, 1 switching output PNP, 3-pin		1	**-AD1**		
		Pressure sensor with LCD display, plug M8, 1 switching output NPN, 3-pin		1	**-AD2**		
		Pressure sensor with LCD display, plug M12, 1 switching output PNP, 4-pin, analogue output 4 ... 20 mA		1	**-AD3**		
		Pressure sensor with LCD display, plug M12, 1 switching output NPN, 4-pin, analogue output 4 ... 20 mA		1	**-AD4**		
		Pressure sensor with operational status indicator, plug M8, threshold value comparator, PNP, N/O contact		1	**-AD7**		
		Pressure sensor with operational status indicator, plug M8, threshold value comparator, PNP, N/C contact		1	**-AD8**		
		Pressure sensor with operational status indicator, plug M8, window comparator, PNP, N/O contact		1	**-AD9**		
		Pressure sensor with operational status indicator, plug M8, window comparator, PNP, N/C contact		1	**-AD10**		
	Alternative pressure gauge scale	psi		2	**-PSI**		
		MPa		2	**-MPA**		
	Type of mounting	Mounting bracket		3	**-WP**		
		Mounting bracket		3	**-WPM**		
		Mounting bracket			**-WB**		
		Mounting bracket	–		**-WBM**		
	Flow direction	Flow direction from right to left			**-Z**		

1 **AD1 ... AD4, AD7 ... AD10** Measuring range max. 10 bar

2 **PSI, MPA** Only with pressure gauge AG or RG

3 **WP, WPM** Only with connecting plate AGA, AGB, AGC, AGD or AGE

Transfer order code

–		–		–		–	

New
Variant 10V24P

Soft-start valves MS4/MS6-DE, MS series

Peripherals overview

FESTO

Soft-start valve MS4/MS6-DE

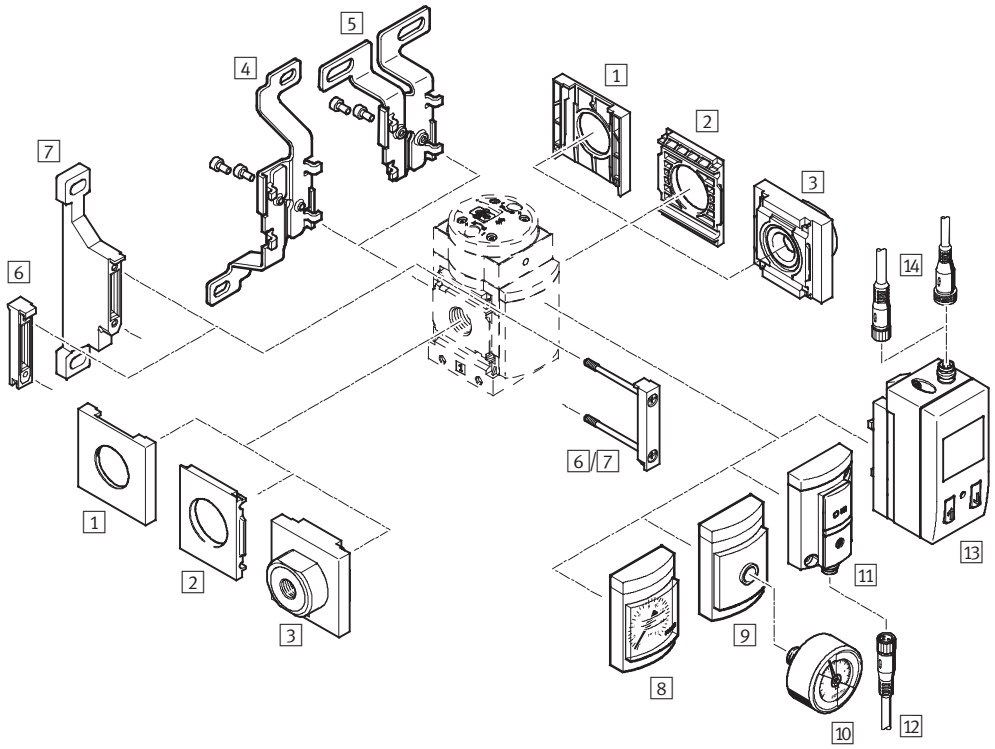

Note

Additional accessories:
- Module connector for combination with size MS4/MS6 or size MS9 ➔ Internet: amv, rmv, armv
- Adapter plate for mounting on profiles ➔ Internet: ipm-80, ipm-40-80, ipm-80-80

Supply voltage V24/10V24/V110/V230	Supply voltage 10V24P

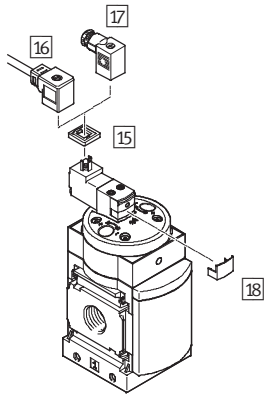

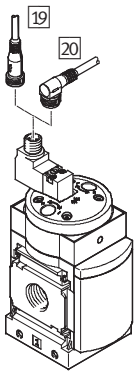

Soft-start valves MS4/MS6-DE, MS series

Peripherals overview

FESTO

Mounting attachments and accessories						
		Individual device		Combination		→ Page/Internet
		Without connecting plate	With connecting plate	Without connecting plate	With connecting plate	
1	Cover cap MS4/6-END	■	–	■	–	ms4-end, ms6-end
2	Mounting plate MS4/6-AEND	■1)	–	■1)	–	ms4-aend, ms6-aend
3	Connecting plate MS4/6-AG...	–	■1)	–	■1)	ms4-ag, ms6-ag
4	Mounting bracket MS4/6-WB	■	■	–	–	ms4-wb, ms6-wb
5	Mounting bracket MS4-WBM	■	■	–	–	ms4-wbm
6	Module connector MS4/6-MV	–	■	■	■	ms4-mv, ms6-mv
7	Mounting bracket MS4/6-WP	■	■	■	■	ms4-wp, ms6-wp
	Mounting bracket (not illustrated) MS4/6-WPB/WPE/WPM	■	■	■	■	ms4-wp, ms6-wp
8	MS pressure gauge AG/RG	■	■	■	■	48
9	Adapter plate for EN pressure gauge ⅛/¼ A8/A4	■	■	■	■	48
10	Pressure gauge MA	■	■	■	■	93
11	Pressure sensor without display AD7 ... AD10	■	■	■	■	48
12	Connecting cable NEBU-M8...-LE3	■	■	■	■	93
13	Pressure sensor with display AD1 ... AD4	■	■	■	■	48
14	Connecting cable NEBU-M8...-LE3/NEBU-M12...-LE4	■	■	■	■	93
15	Illuminating seal MEB-LD	■	■	■	■	92
16	Plug socket with cable KMEB	■	■	■	■	92
17	Plug socket MSSD-EB	■	■	■	■	92
18	Locking clip CPV18-HV	■	■	■	■	92
19	Connecting cable NEBU-M12G5	■	■	■	■	93
20	Connecting cable NEBU-M12W5	■	■	■	■	93

1) Module connector MS4/6-MV 6 or mounting bracket MS4/6-WP/WPB/WPE/WPM 7 is required for mounting.

New
Variant 10V24P

Soft-start valves MS4/MS6-DE, MS series

Type codes

MS	6	–	DE	–	½	–	V110

Series	
MS	Standard service unit

Size	
4	Grid dimension 40 mm
6	Grid dimension 62 mm

Service function	
DE	Solenoid actuated soft-start valve

Pneumatic connection	
MS4	
⅛	Female thread G⅛
¼	Female thread G¼
MS6	
¼	Female thread G¼
⅜	Female thread G⅜
½	Female thread G½

Supply voltage	
10V24	Supply voltage 24 V DC
V110	Supply voltage 110 V AC
V230	Supply voltage 230 V AC

Additional variants can be ordered using the modular system ➔ 48

- Connecting plates
- Supply voltage
- Pressure gauge/pressure gauge alternatives
- Alternative pressure gauge scale
- Type of mounting
- EU Certification
- Flow direction

New
Variant 10V24P

Soft-start valves MS4/MS6-DE, MS series

Technical data

FESTO

Function

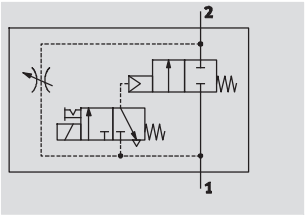

Flow rate
1,000 ... 6,450 l/min

Temperature range
–10 ... +60 °C

Pressure
4 ... 18 bar

The duration of the pressure build-up is adjusted using the restrictor attached to the valve cap.
The output pressure p2 rises slowly in accordance with the restrictor setting. Only the air flow from the restrictor is available when the solenoid valve is not actuated. The main seat is only opened by energising the solenoid valve.

When the solenoid valve is switched off, the main seat is closed and only the air flow from the flow control valve is available.
The solenoid valve should remain switched on in order to vent a system as this increases the flow rate from 2 and 1 and reduces the exhaust time.

- Solenoid actuated soft-start valve for slowly pressurising and venting pneumatic installations
- The drives advance slowly and reliably into the initial position
- Sudden and erratic movements are avoided
- With solenoid coil without plug socket
- Switch-through pressure can be precisely controlled using a solenoid valve
- Adjustable switching time delay
- Three voltage ranges can be selected
- Non-detenting and detenting manual override (variant 10V24: only non-detenting)
- Solenoid actuator can be repositioned by 180°
- Optional pressure sensor
- Optional device variant EX2 for use in potentially explosive areas in zones 2 and 22

General technical data					
Size	MS4		MS6		
Pneumatic connection 1, 2	G⅛	G¼	G¼	G⅜	G½
Design	Piston poppet valve				
Type of mounting	Via accessories				
	In-line installation				
Assembly position	Any				
Pressure indicator	Via pressure sensor for displaying output pressure via LCD display and electrical output				
	Via pressure sensor for displaying output pressure via operational status indicator and electrical output				
	Via pressure gauge for displaying output pressure				
	Via pressure gauge with red/green scale for displaying output pressure				
	G¼ prepared				
	G⅛ prepared		–		
Valve function	2/2-way valve				
Type of reset	Mechanical spring				
Switching position display	Via accessories				
Pilot control mode	Piloted				
Pilot air supply	Internal				
Direction of flow	Non-reversible				
C value [l/(s*bar)]	4.6	9.6	11.22	21.05	28.97
b value	0.5	0.45	0.54	0.48	0.39

Note: This product conforms to ISO 1179-1 and ISO 228-1

New
Variant 10V24P

Soft-start valves MS4/MS6-DE, MS series

Technical data

Electrical data		
Coil characteristics	V24	24 V DC: 1.5 W; perm. voltage fluctuations –25%/+10%
	10V24	24 V DC: 2.5 W; perm. voltage fluctuations ±10%
	10V24P	24 V DC: 1.8 W; perm. voltage fluctuations –15%/+10%
	V110	110 V AC: 50/60 Hz; pick-up power 3.0 W; holding power 2.4 W; perm. voltage fluctuations ±10%
	V230	230 V AC: 50/60 Hz; pick-up power 3.0 W; holding power 2.4 W; perm. voltage fluctuations –14%/+10%
Electrical connection	V24, 10V24, V110, V230	Plug, square design to EN 175301-803, type C
	10V24P	M12x1 to IEC 61076-2-101
Protection class solenoid coil		IP65
Duty cycle [%]		100

Standard nominal flow rate qnN[1] [l/min]					
Size	MS4		MS6		
Pneumatic connection	G⅛	G¼	G¼	G⅜	G½
In main flow direction 1 → 2	1,000	2,000	2,700	5,050	6,450
In relief direction 2 → 1[2]	1,000	2,000	2,600	5,050	6,400

1) Measured at p1 = 6 bar and p2 = 5 bar, Δp = 1 bar
2) For energised solenoid valve.

Operating and environmental conditions							
Variant		Coil parameter V24, V110, V230		Coil parameter 10V24, 10V24P		Pressure sensor AD...	
Size		MS4	MS6	MS4	MS6	MS4	MS6
Operating pressure	[bar]	4 ... 14	4 ... 18	4 ... 10	4 ... 10	4 ... 10	4 ... 10
Operating medium		Compressed air in accordance with ISO 8573-1:2010 [7:4:4]					
		Inert gases					
Note on operating/pilot medium		Operation with lubricated medium possible (in which case lubricated operation will always be required)					
Ambient temperature	[°C]	–10 ... +60	–10 ... +60	–10 ... +50	–10 ... +50	0 ... +50	0 ... +50
Temperature of medium	[°C]	–10 ... +60	–10 ... +60	–10 ... +50	–10 ... +50	0 ... +50	0 ... +50
Corrosion resistance	CRC[1]	2					

1) Corrosion resistance class 2 according to Festo standard 940 070
Components requiring moderate corrosion resistance. Externally visible parts with primarily decorative surface requirements which are in direct contact with a normal industrial environment or media such as coolants or lubricating agents.

ATEX	
Variant	EX2
ATEX category gas	II 3G
Ex-ignition protection type gas	Ex nA IIC T4 X Gc
ATEX category dust	II 3D
EX-ignition protection type dust	Ex tc IIIC T105°C X Dc IP65
ATEX ambient temperature	–10 °C ≤ Ta ≤ +60 °C
CE mark (see declaration of conformity)	To EU Explosion Protection Directive (ATEX)
	To EU EMC Directive
	To EU Low Voltage Directive

Soft-start valves MS4/MS6-DE, MS series

Technical data

Weights [g]		
Size	MS4	MS6
Soft-start valve	263	680

Materials

Sectional view

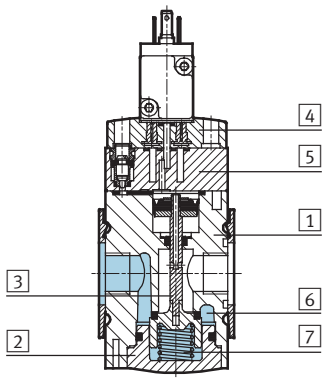

Soft-start valve	
1 Body	Die-cast aluminium
2 Base	PET
3 Valve stem	Aluminium
4 End cap	PA
5 Top plate	PA
6 Seat	Aluminium
7 Springs	Spring steel
– Seals	NBR
Note on materials	RoHS-compliant
	Free of copper and PTFE (not with variants AG, 10V24, 10V24P or AD...)

Soft-start valves MS4/MS6-DE, MS series

Technical data

FESTO

Dimensions – Basic version Download CAD Data ➔ **www.festo.com/us/cad**

With female thread, with cover plate

Supply voltage V24/10V24/V110/V230

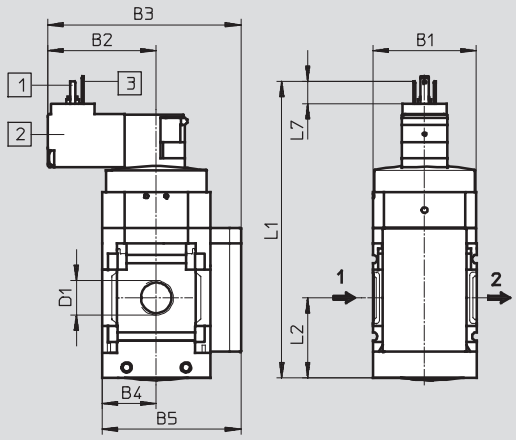

Supply voltage 10V24P

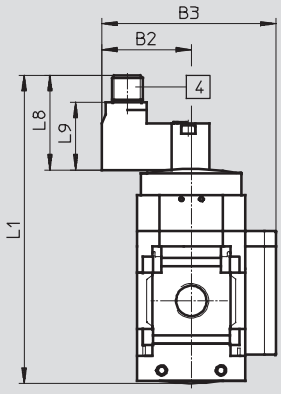

1 = Unused
2 = Unused
3 = com (–)
4 = Signal (+) solenoid 14

1 Plug connection to EN 175301-803
2 Solenoid actuator can be repositioned by 180°, i.e. solenoid points to the front
3 PIN only with solenoid actuators 110 V and 230 V
4 Electrical connection to IEC 61076-2-101, plug M12x1, 2 pin for NEBU-M12

➔ Flow direction

Supply voltage V24/V110/V230

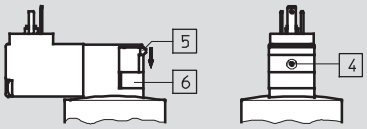

Note

For detenting manual override remove the grey cover plate 6 and press the slide 5 downwards.

Supply voltage 10V24/10V24P

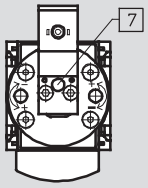

4 Manual override, non-detenting (delivery status)
5 Slide
6 Cover plate
7 Non-detenting and detenting manual override (variant 10V24: only non-detenting)

Type	B1	B2		B3		B4	B5	D1
		V24/ V110/ V230	10V24/ 10V24P	V24/ V110/ V230	10V24/ 10V24P			
MS4-DE-⅛	40	42.2	34.9	75.2	67.9	21	54	G⅛
MS4-DE-¼								G¼
MS6-DE-¼	62	52	44.7	97	89.7	31	76	G¼
MS6-DE-⅜								G⅜
MS6-DE-½								G½

Type	L1			L2	L7	L8	L9
	V24/ V110/ V230	10V24	10V24P				
MS4-DE-⅛	115.4	112.9	117.8	31.5	8.6	36.7	26.1
MS4-DE-¼							
MS6-DE-¼	147	144.9	149.8	45.5	8.6	36.7	26.1
MS6-DE-⅜							
MS6-DE-½							

Note: This product conforms to ISO 1179-1 and ISO 228-1

Soft-start valves MS4/MS6-DE, MS series

Technical data

FESTO

Dimensions – Pressure gauge/pressure gauge alternatives Download CAD Data ➔ **www.festo.com/us/cad**

Integrated MS pressure gauge with standard scale AG or red-green scale RG, display unit [bar]

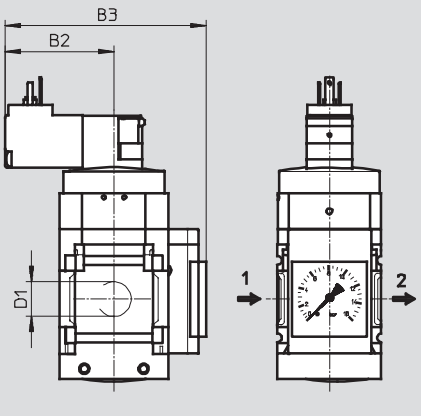

➔ Flow direction

Adapter plate A8/A4 for EN pressure gauge ⅛/¼, without pressure gauge

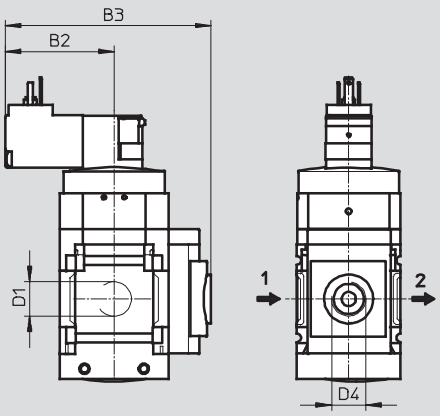

➔ Flow direction

Type	B2		B3		D1	D4
	V24/V110/V230	10V24/10V24P	V24/V110/V230	10V24/10V24P		
MS4-DE-⅛-...-AG	42.2	34.9	86.2	78.9	G⅛	–
MS4-DE-¼-...-AG					G¼	
MS4-DE-⅛-...-RG	42.2	34.9	87.7	80.4	G⅛	–
MS4-DE-¼-...-RG					G¼	
MS4-DE-⅛-...-A8	42.2	34.9	79.7	72.4	G⅛	G⅛
MS4-DE-¼-...-A8					G¼	
MS4-DE-⅛-...-A4	42.2	34.9	79.7	72.4	G⅛	G¼
MS4-DE-¼-...-A4					G¼	
MS6-DE-¼-...-AG	52	44.7	106	98.7	G¼	–
MS6-DE-⅜-...-AG					G⅜	
MS6-DE-½-...-AG					G½	
MS6-DE-¼-...-RG	52	44.7	107.5	100.2	G¼	–
MS6-DE-⅜-...-RG					G⅜	
MS6-DE-½-...-RG					G½	
MS6-DE-¼-...-A4	52	44.7	99.6	92.3	G¼	G¼
MS6-DE-⅜-...-A4					G⅜	
MS6-DE-½-...-A4					G½	

Note: This product conforms to ISO 1179-1 and ISO 228-1

Soft-start valves MS4/MS6-DE, MS series

Technical data

FESTO

Dimensions – Pressure gauge/pressure gauge alternatives Download CAD Data ➔ **www.festo.com/us/cad**

Pressure sensor with LCD display AD1 ... AD4 Technical data ➔ Internet: sde1

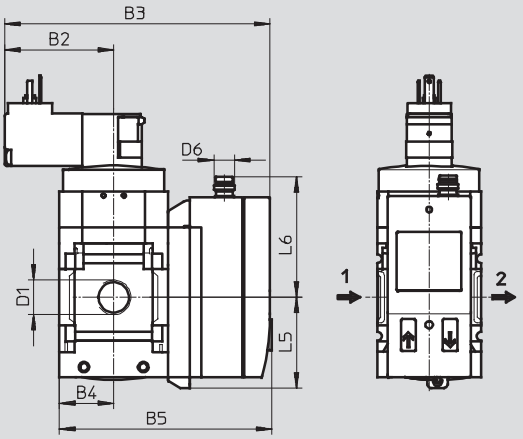

➔ Flow direction

Variant AD1:
SDE1-D10-G2-MS-L-P1-M8 with 3-pin plug M8x1, 1 switching output PNP

Variant AD2:
SDE1-D10-G2-MS-L-N1-M8 with 3-pin plug M8x1, 1 switching output NPN

Variant AD3:
SDE1-D10-G2-MS-L-PI-M12 with 4-pin plug M12x1, 1 switching output PNP and 4 ... 20 mA analogue

Variant AD4:
SDE1-D10-G2-MS-L-NI-M12 with 4-pin plug M12x1, 1 switching output NPN and 4 ... 20 mA analogue

Type	B2		B3		B4	B5	D1	D6	L5	L6
	V24/ V110/ V230	10V24/ 10V24P	V24/ V110/ V230	10V24/ 10V24P						
MS4-DE-⅛-...-AD1/AD2	42.2	34.9	103.8	96.5	21	82.6	G⅛	M8x1	35.1	46.7
MS4-DE-¼-...-AD1/AD2							G¼			
MS4-DE-⅛-...-AD3/AD4	42.2	34.9	103.8	96.5	21	82.6	G⅛	M12x1	35.1	55.8
MS4-DE-¼-...-AD3/AD4							G¼			
MS6-DE-¼-...-AD1/AD2	52	44.7	124	116.7	31	103	G¼	M8x1	35.1	46.7
MS6-DE-⅜-...-AD1/AD2							G⅜			
MS6-DE-½-...-AD1/AD2							G½			
MS6-DE-¼-...-AD3/AD4	52	44.7	124	116.7	31	103	G¼	M12x1	35.1	55.8
MS6-DE-⅜-...-AD3/AD4							G⅜			
MS6-DE-½-...-AD3/AD4							G½			

Note: This product conforms to ISO 1179-1 and ISO 228-1

Soft-start valves MS4/MS6-DE, MS series

Technical data

FESTO

Dimensions – Pressure gauge/pressure gauge alternatives Download CAD Data ➔ **www.festo.com/us/cad**

Pressure sensor with operational status indicator AD7 ... AD10 Technical data ➔ Internet: sde5

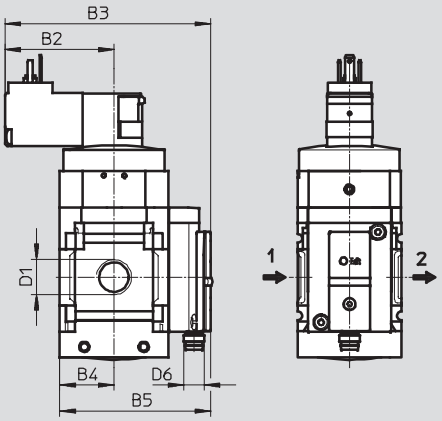

➔ Flow direction

Variant AD7:
SDE5-D10-O-...-P-M8 with 3-pin plug M8x1, threshold value comparator, 1 switching output PNP, N/O contact

Variant AD8:
SDE5-D10-C-...-P-M8 with 3-pin plug M8x1, threshold value comparator, 1 switching output PNP, N/C contact

Variant AD9:
SDE5-D10-O3-...-P-M8 with 3-pin plug M8x1, window comparator, 1 switching output PNP, N/O contact

Variant AD10:
SDE5-D10-C3-...-P-M8 with 3-pin plug M8x1, window comparator, 1 switching output PNP, N/C contact

Type	B2		B3		B4	B5	D1	D6
	V24/ V110/ V230	10V24/ 10V24P	V24/ V110/ V230	10V24/ 10V24P				
MS4-DE-⅛-...-AD7/AD8/AD9/AD10	42.2	34.9	80.3	73	21	59.1	G⅛	M8x1
MS4-DE-¼-...-AD7/AD8/AD9/AD10							G¼	
MS6-DE-¼-...-AD7/AD8/AD9/AD10	52	44.7	100.2	92.9	31	79	G¼	M8x1
MS6-DE-⅜-...-AD7/AD8/AD9/AD10							G⅜	
MS6-DE-½-...-AD7/AD8/AD9/AD10							G½	

Note: This product conforms to ISO 1179-1 and ISO 228-1

Ordering data

Size	Connection	Supply voltage 24 V DC		Supply voltage 110 V AC		Supply voltage 230 V AC	
		Part No.	Type	Part No.	Type	Part No.	Type
MS4	G⅛	**542560**	**MS4-DE-⅛-10V24**	**529525**	**MS4-DE-⅛-V110**[1)]	**529527**	**MS4-DE-⅛-V230**[1)]
	G¼	**542558**	**MS4-DE-¼-10V24**	**529519**	**MS4-DE-¼-V110**[1)]	**529521**	**MS4-DE-¼-V230**[1)]
MS6	G¼	**542564**	**MS6-DE-¼-10V24**	**529805**	**MS6-DE-¼-V110**[1)]	**529807**	**MS6-DE-¼-V230**[1)]
	G⅜	**542566**	**MS6-DE-⅜-10V24**	**529811**	**MS6-DE-⅜-V110**[1)]	**529813**	**MS6-DE-⅜-V230**[1)]
	G½	**542562**	**MS6-DE-½-10V24**	**529799**	**MS6-DE-½-V110**[1)]	**529801**	**MS6-DE-½-V230**[1)]

1) Free of copper and PTFE

New
Variant 10V24P

Soft-start valves MS4/MS6-DE, MS series

Ordering data – Modular products

FESTO

M **Mandatory data**

Module No.	Series	Size		Function		Pneumatic connection		Supply voltage	
527713 527686	MS	4 6		DE		1/8, 1/4, 3/8, 1/2, AGA, AGB, AGC, AGD, AGE		V24, 10V24, 10V24P, V110, V230	
Order example									
527713	**MS**	**4**	**–**	**DE**	**–**	**AGA**	**–**	**V110**	**–**

Ordering table

Grid dimension [mm]		40	62	Conditions	Code	Enter code
M	Module No.	**527713**	**527686**			
	Series	Standard			**MS**	MS
	Size	4	6		**...**	
	Function	Soft-start valve, electrical			**-DE**	-DE
	Pneumatic connection	Female thread G1/8	–	5	**-1/8**	
		Female thread G1/4	Female thread G1/4	5	**-1/4**	
		–	Female thread G3/8	5	**-3/8**	
		–	Female thread G1/2	5	**-1/2**	
		Connecting plate G1/8	–		**-AGA**	
		Connecting plate G1/4	Connecting plate G1/4		**-AGB**	
		Connecting plate G3/8	Connecting plate G3/8		**-AGC**	
		–	Connecting plate G1/2		**-AGD**	
		–	Connecting plate G3/4		**-AGE**	
	Supply voltage	24 V DC (pin allocation to EN 175301) 4 ... 14 bar	4 ... 18 bar		**-V24**	
		24 V DC (pin allocation to EN 175301) 4 ... 10 bar	4 ... 10 bar	1 5	**-10V24**	
		24 V DC, M12 to IEC 61076-2-101 4 ... 10 bar	4 ... 10 bar	1 5	**-10V24P**	
		110 V AC (pin allocation to EN 175301) 4 ... 14 bar	4 ... 18 bar	5	**-V110**	
		230 V AC (pin allocation to EN 175301) 4 ... 14 bar	4 ... 18 bar	5	**-V230**	

1 **10V24, 10V24P**
Max. operating pressure 10 bar

Transfer order code

	MS		**–**	**DE**	**–**		**–**		

Soft-start valves MS4/MS6-DE, MS series

FESTO

Ordering data – Modular products

➔ 0 **Options**

	Pressure gauge/pressure gauge alternatives		Alternative pressure gauge scale		Type of mounting		EU certification		Flow direction
	AG, A8, A4, RG, AD1, AD2, AD3, AD4, AD7, AD8, AD9, AD10		PSI, MPA		WP, WPM, WB, WBM		EX2		Z
–	**AG**	–	**PSI**	–	**WP**	–		–	**Z**

Ordering table

Grid dimension [mm]		40	62	Conditions	Code		Enter code
0	Pressure gauge/pressure gauge alternatives	MS pressure gauge (with adapter plate)	MS pressure gauge		-AG		
		Adapter plate for EN pressure gauge 1/8, without pressure gauge	–		-A8		
		Adapter plate for EN pressure gauge 1/4, without pressure gauge			-A4		
		Integrated pressure gauge, red-green scale			-RG		
		Pressure sensor with LCD display, plug M8, 1 switching output PNP, 3-pin		2 5	-AD1		
		Pressure sensor with LCD display, plug M8, 1 switching output NPN, 3-pin		2 5	-AD2		
		Pressure sensor with LCD display, plug M12, 1 switching output PNP, 4-pin, analogue output 4 ... 20 mA		2 5	-AD3		
		Pressure sensor with LCD display, plug M12, 1 switching output NPN, 4-pin, analogue output 4 ... 20 mA		2 5	-AD4		
		Pressure sensor with operational status indicator, plug M8, threshold value comparator, PNP, N/O contact		2 5	-AD7		
		Pressure sensor with operational status indicator, plug M8, threshold value comparator, PNP, N/C contact		2 5	-AD8		
		Pressure sensor with operational status indicator, plug M8, window comparator, PNP, N/O contact		2 5	-AD9		
		Pressure sensor with operational status indicator, plug M8, window comparator, PNP, N/C contact		2 5	-AD10		
	Alternative pressure gauge scale	psi		3	-PSI		
		MPa		3	-MPA		
	Type of mounting	Mounting bracket		4	-WP		
		Mounting bracket		4 5	-WPM		
		Mounting bracket			-WB		
		Mounting bracket	–		-WBM		
	EU certification	II 3GD to EU Directive 94/9/EG			-EX2		
	Flow direction	Flow direction from right to left			-Z		

2 **AD1 ... AD4,AD7 ... AD10** Measuring range max. 10 bar

3 **PSI, MPA** Only with pressure gauge AG or RG

4 **WP, WPM** Only with connecting plate AGA, AGB, AGC, AGD or AGE

5 **1/8, 1/4, 3/8, 1/2, 10V24, 10V24P, V110, V230, AD1 ... AD4, AD7 ... AD10, WPM** Not with EU EX2 certification

Transfer order code

–		–		–		–		–	

On-off valves MS9-EM, MS series

Peripherals overview

FESTO

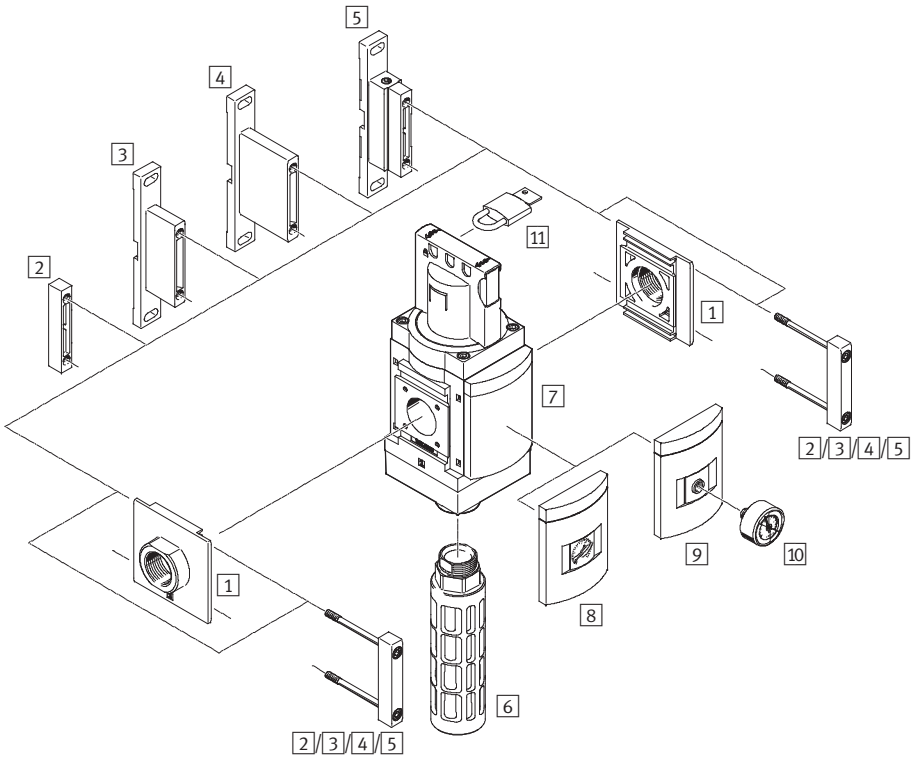

Note

Additional accessories:
- Module connector for combinations with size MS6, MS9 or size MS12
  ➔ Internet: rmv, armv

Mounting attachments and accessories					
	Individual component			Combination	➔ Page/ Internet
	With female thread ¾ or 1	With connecting plate AG...		Module without connecting thread, without connecting plate G	
		Without EU certification EX4	With EU certification EX4		
1 Connecting plate MS9-AG...	–	■	■	■	ms9-ag
2 Module connector MS9-MV	–	–	–	■	ms9-mv
3 Mounting bracket MS9-WP	■	■	■	■[1)]	ms9-wp
4 Mounting bracket MS9-WPB	■	■	■	■[1)]	ms9-wp
5 Mounting bracket MS9-WPM	■	■	–	■	ms9-wp
6 Silencer U	■	■	■	■	93
7 Cover plate VS	■	■	■	■	56
8 MS pressure gauge AG/RG	■	■	■	■	56
9 Adapter plate for EN pressure gauge ¼ A4	■	■	■	■	56
10 Pressure gauge MA	■	■	■	■	93
11 Padlock LRVS-D	■	■	■	■	93

1) The screws for the wall bracket on the reverse side are partially covered by the housing of this service unit. Depending on the configuration of the service unit combination, the screws will no longer be accessible. The mounting bracket MS9-WPM is therefore recommended for wall mounting. It can be used to attach a fully assembled combination to the pre-mounted wall bracket.

On-off valves MS9-EM, MS series

Type codes

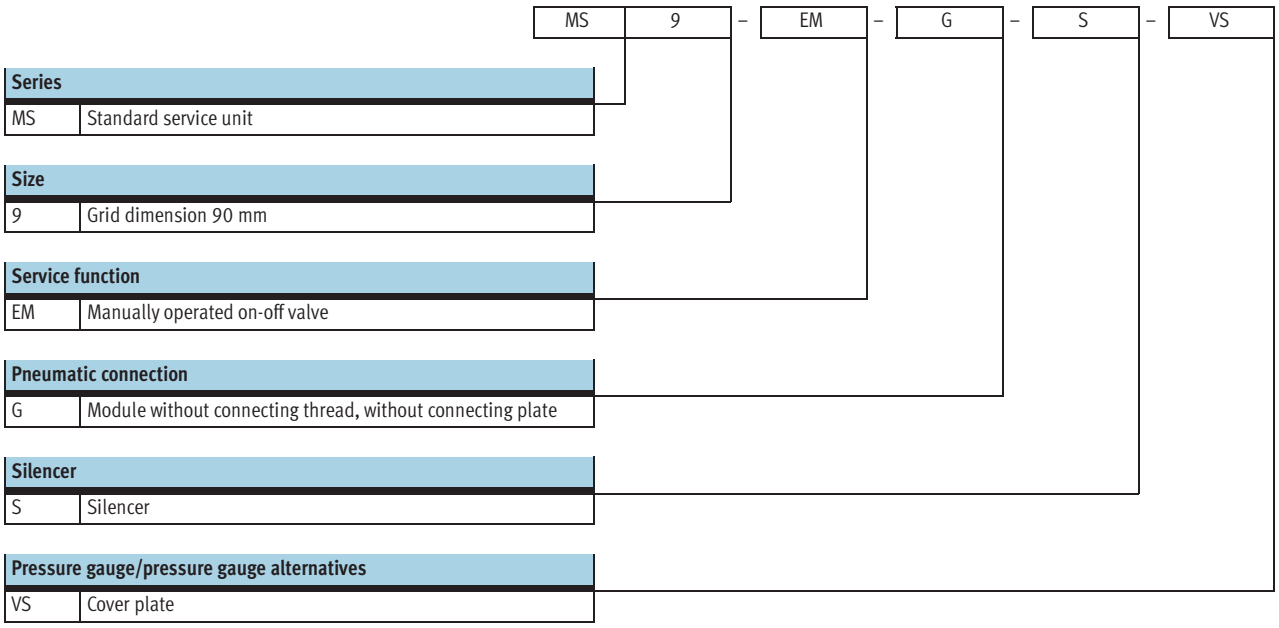

Additional variants can be ordered using the modular system ➔ 56

- Pneumatic connection
- Silencer
- Pressure gauge/pressure gauge alternatives
- Alternative pressure gauge scale
- Valve function
- Type of mounting
- EU certification
- UL certification
- Flow direction

New
Variant EX4, UL1

On-off valves MS9-EM, MS series

Technical data

FESTO

2/2-way valve, double solenoid

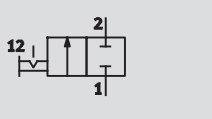

3/2-way valve, double solenoid

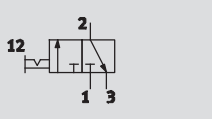

Flow rate
8,000 ... 18,000 l/min
Temperature range
–10 ... +60 °C
Pressure
0 ... 20 bar

- Manually operated on-off valve for pressurising and venting pneumatic installations
- Ducted exhaust possible via a threaded connection with silencer
- The switching position is immediately recognisable
- Actuator secured by locking the rotary knob
- Commercially available padlock can be used for security
- Optional pressure gauge
- Optional device variant EX4 for use in potentially explosive areas in zones 1, 2, 21 and 22

General technical data				
Pneumatic connection 1, 2	G¾ (Female thread)	G1 (Female thread)	G½ ... G1½ (With connecting plate AG...)	– (Module without connecting thread, without connecting plate G)
Pneumatic connection 3	G1			
Design	Piston spool valve			
Type of mounting	Via accessories			
	In-line installation			
Mounting position	Any			
Regulator lock	Rotary knob with detent			
Pressure display	Via pressure gauge for displaying output pressure			
	Via pressure gauge with red/green scale for displaying output pressure			
	G¼ prepared			
Valve function	2/2-way valve, double solenoid			
	3/2-way valve, double solenoid			
Exhaust air function	No flow control			
Reset method	Forced			
Type of control	Direct			
Sealing principle	Soft			

Note: This product conforms to ISO 1179-1 and ISO 228-1

Flow rate characteristic values								
Pneumatic connection	Female thread		Connecting plate					None
	G¾	G1	AGD	AGE	AGF	AGG	AGH	G
Standard nominal flow rate qnN[1] [l/min]								
In main flow direction 1 → 2	14,500	18,000	8,000	14,000	18,000	18,000	18,000	18,000
In relief direction 2 → 3	14,900	14,100	16,500	14,400	13,800	13,200	13,200	14,100
C value [l/s*min]								
In main flow direction 1 → 2	59.59	76.90	32.75	57.50	75.65	75.51	75.17	–
In relief direction 2 → 3	55.11	53.54	56.22	54.07	52.73	51.06	51.36	–
b value								
In main flow direction 1 → 2	0.41	0.37	0.45	0.39	0.38	0.39	0.38	–
In relief direction 2 → 3	0.50	0.48	0.60	0.49	0.47	0.45	0.44	–

1) Measured at p1 = 6 bar and p2 = 5 bar, Δp = 1 bar

On-off valves MS9-EM, MS series

Technical data

FESTO

Operating and environmental conditions		
Operating pressure	[bar]	0 ... 20
Operating medium		Compressed air in accordance with ISO 8573-1:2010 [7:4:4]
Note on operating/pilot medium		Operation with lubricated medium possible (in which case lubricated operation will always be required)
Ambient temperature	[°C]	–10 ... +60
Temperature of medium	[°C]	–10 ... +60
Corrosion resistance class CRC[1)]		2
Noise level	[dB (A)]	93[2)] with silencer
Certification (variant UL1)		cULus recognized (OL)

1) Corrosion resistance class 2 according to Festo standard 940 070
Components subject to moderate corrosion stress. Externally visible parts with primarily decorative surface requirements which are in direct contact with a normal industrial environment or media such as coolants or lubricating agents.
2) Venting at 10 bar at a distance of 1 m.

ATEX	
EU certification	EX4
ATEX category gas	II 2G
Ex-ignition protection type gas	c T6 X
ATEX category dust	II 2D
EX-ignition protection type dust	c 60 °C X
ATEX ambient temperature	–10 °C ≤ Ta ≤ +60 °C
CE mark (see declaration of conformity)	To EU Explosion Protection Directive (ATEX)

Weight [g]	
On-off valve	2,200
On-off valve with silencer S	2,400

Materials

Sectional view

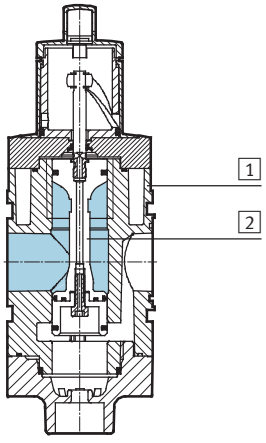

On-off valve		
1	Housing	Die-cast aluminium
2	Piston spool	POM
–	Seals	NBR
Note on materials		RoHS-compliant

On-off valves MS9-EM, MS series

Technical data

FESTO

Dimensions – Basic version

Download CAD Data ➔ **www.festo.com/us/cad**

Module without connecting thread, without connecting plate G, with cover plate VS

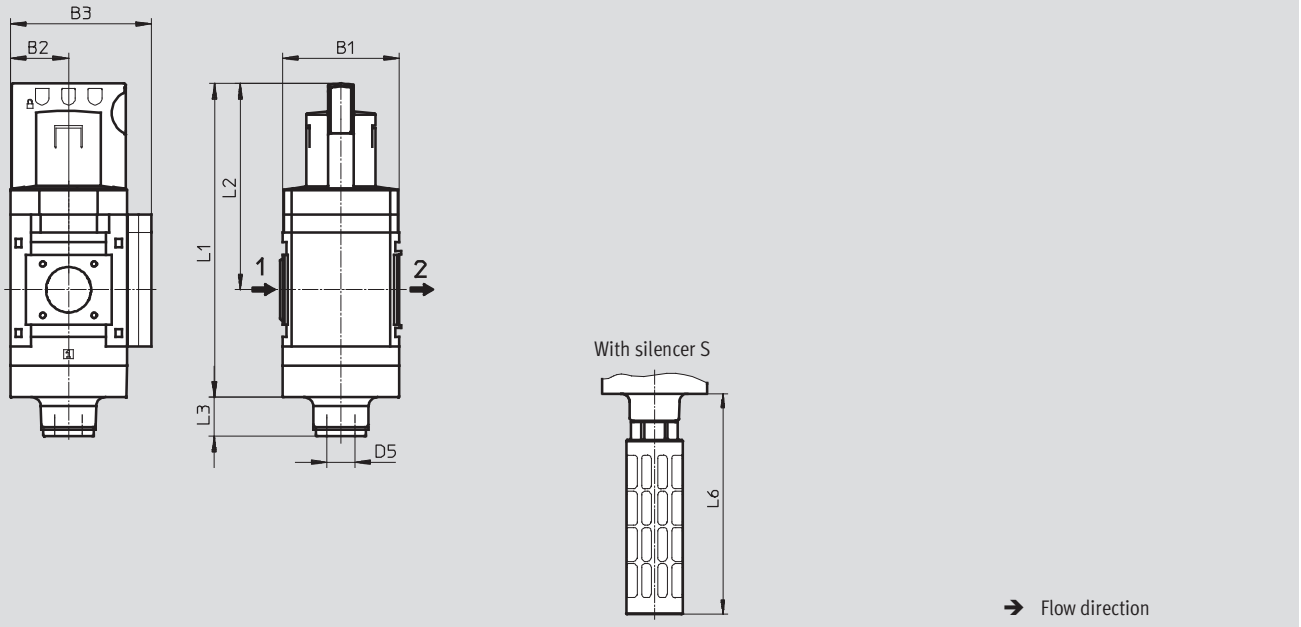

➔ Flow direction

Type	B1	B2	B3	D5	L1	L2	L3		L6
							2/2-way valve	3/2-way valve	
MS9-EM-G	90	45	109	G1	242	159	30	23	189

Dimensions – Connecting thread/connecting plate

Download CAD Data ➔ **www.festo.com/us/cad**

With female thread ¾ or 1

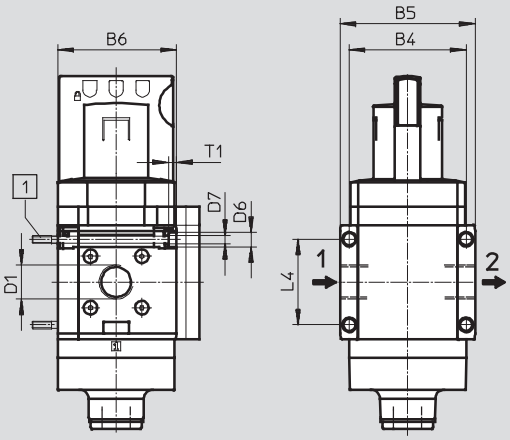

With connecting plate AG...

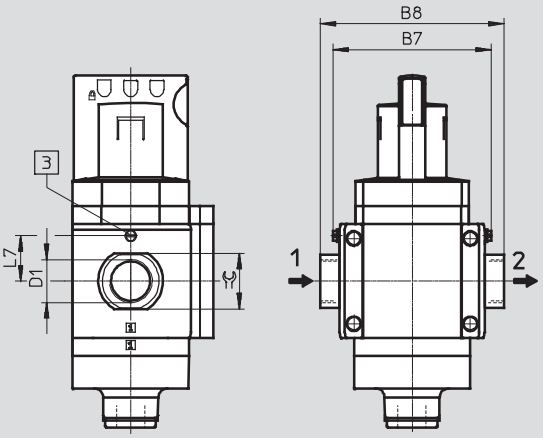

[1] Mounting screw M6xmin.90 to DIN 912 (not included in the scope of delivery) for wall mounting without mounting bracket

[3] Earthing screw M4x8 (only with MS9-...-EX4)

➔ Flow direction

Type	B4	B5	B6	B7		B8	D1	D6	D7	L4	L7	T1	⌀
					EX4						EX4		
MS9-EM-¾	90	104	91.5	–	–	–	G¾	11	6.5	66	–	6	–
MS9-EM-1							G1						
MS9-EM-AGD	–	–	–	112	122	132	G½	–	–	–	35	–	30
MS9-EM-AGE						132	G¾						36
MS9-EM-AGF						142	G1						41
MS9-EM-AGG						162	G1¼						50
MS9-EM-AGH						176	G1½						55

Note: This product conforms to ISO 1179-1 and ISO 228-1

On-off valves MS9-EM, MS series

Technical data

FESTO

Dimensions – Pressure gauge/pressure gauge alternatives Download CAD Data ➔ **www.festo.com/us/cad**

Integrated MS pressure gauge with standard scale AG or red/green scale RG

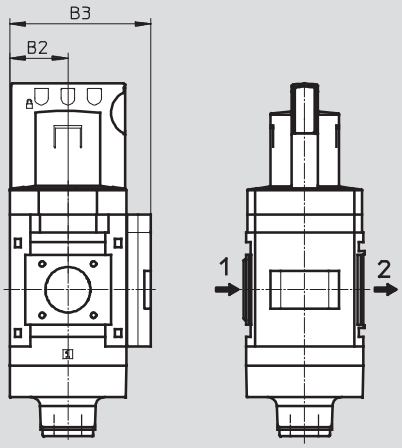

Adapter plate A4 for EN pressure gauge ¼, without pressure gauge

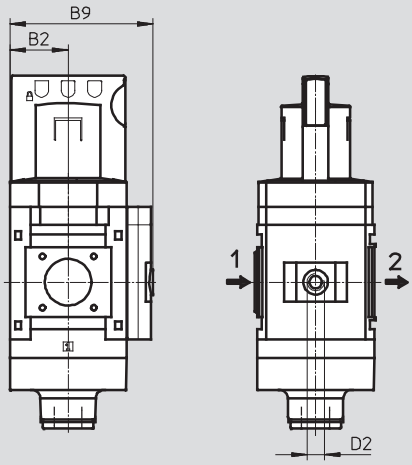

➔ Flow direction

Type	B2	B3	B9	D2
MS9-EM-...-AG/RG	45	109	–	–
MS9-EM-...-A4		–	110	G¼

Note: This product conforms to ISO 1179-1 and ISO 228-1

Ordering data

3/2-way valve, with silencer

Size	Connection	Part No.	Type
MS9	–	**562952**	**MS9-EM-G-S-VS**

On-off valves MS9-EM, MS series

Ordering data – Modular products

FESTO

M **Mandatory data**

Module No.	Series	Size		Function		Pneumatic connection
562178	MS	9		EM		¾, 1, AGD, AGE, AGF, AGG, AGH, G
Ordering example						
562178	**MS**	**9**	–	**EM**	–	**G**

Ordering table

Grid dimension [mm]		90	Conditions	Code		Enter code
M	Module No.	**562178**				
	Series	Standard		**MS**		MS
	Size	9		**9**		9
	Function	Manual on-off valve		**-EM**		-EM
	Pneumatic connection	Female thread G¾	1	**-¾**		
		Female thread G1	1	**-1**		
		Connecting plate G½		**-AGD**		
		Connecting plate G¾		**-AGE**		
		Connecting plate G1		**-AGF**		
		Connecting plate G1¼		**-AGG**		
		Connecting plate G1½		**-AGH**		
		Module without connecting thread, without connecting plate	1	**-G**		

1 **¾, 1, G, WPM** Not with EU certification EX4

Transfer order code

562178	**MS**	**9**	–	**EM**	–	

On-off valves MS9-EM, MS series

Ordering data – Modular products

FESTO

➔	O Options	M Mandatory data		O Options				
	Silencer	Pressure gauge/pressure gauge alternatives	Alternative pressure gauge scale	Valve function	Type of mounting	EU certification	UL certification	Flow direction
	S	AG, VS, A4, RG	PSI, MPA, BAR	- 2	WP, WPM, WPB	EX4	UL1	Z
–	S	AG	BAR					

Ordering table

Grid dimension [mm]		90	Conditions	Code		Enter code
O	Silencer	Silencer		-S		
M	Pressure gauge/pressure gauge alternatives	MS pressure gauge		-AG		
		Cover plate		-VS		
		Adapter plate for EN pressure gauge ¼, without pressure gauge		-A4		
		Integrated pressure gauge, red/green scale	2	-RG		
	Alternative pressure gauge scale	Psi	3	-PSI		
		MPa	3	-MPA		
		Bar	3	-BAR		
O	Valve function	Standard (3/2-way valve)		-		
		2/2-way valve	4	-2		
	Type of mounting	Mounting bracket	5	-WP		
		Mounting bracket	1 5	-WPM		
		Mounting bracket for large wall gap	5	-WPB		
	EU certification	II 2GD to EU Directive 94/9/EG		-EX4		
	UL certification	cULus, ordinary location for Canada and USA		-UL1		
	Flow direction	Flow direction from right to left		-Z		

1 **¾, 1, G, WPM** Not with EU certification EX4

2 **RG** Not with alternative pressure gauge scale PSI
PSI scale serves only as an auxiliary scale

3 **PSI, MPA, BAR** Not with pressure gauge/pressure gauge alternatives VS, A4

4 **2** Not with silencer S

5 **WP, WPM, WPB** Not with module G

Transfer order code

–		–		–		–		–		–		–	

On-off valves MS9-EE, MS series

Peripherals overview

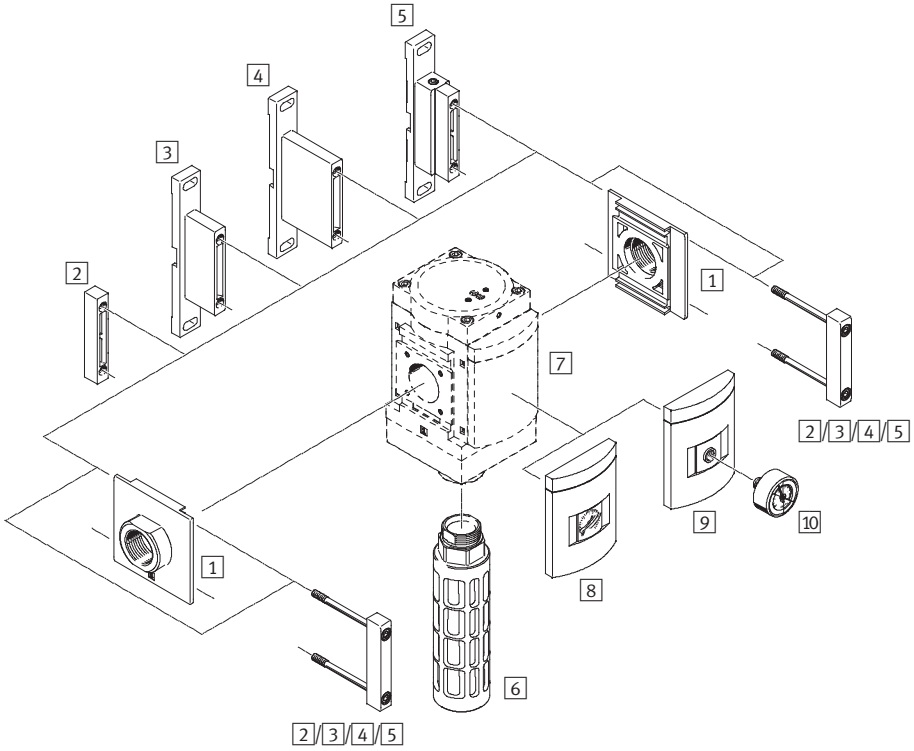

Note

Additional accessories:
- Module connector for combinations with size MS6, MS9 or size MS12
  ➔ Internet: rmv, armv

Supply voltage V24/V110/V230	Supply voltage V24P

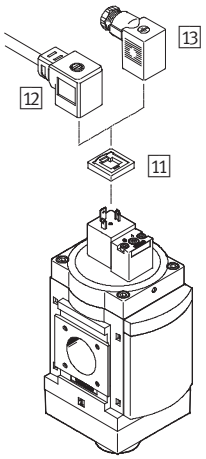

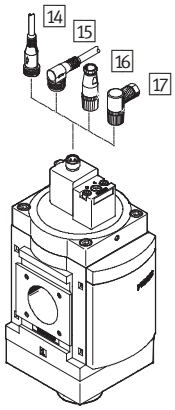

On-off valves MS9-EE, MS series

Peripherals overview

FESTO

Mounting attachments and accessories						
		Individual component			Combination	➔ Page/ Internet
		With female thread ¾ or 1	With connecting plate AG...		Module without connecting thread, without connecting plate G	
			Without EU certification EX2	With EU certification EX2		
1	Connecting plate MS9-AG...	–	■	■	■	ms9-ag
2	Module connector MS9-MV	–	–	–	■	ms9-mv
3	Mounting bracket MS9-WP	■	■	■	■[1)]	ms9-wp
4	Mounting bracket MS9-WPB	■	■	■	■[1)]	ms9-wp
5	Mounting bracket MS9-WPM	■	■	–	■	ms9-wp
6	Silencer U	■	■	■	■	93
7	Cover plate VS	■	■	■	■	66
8	MS pressure gauge AG/RG	■	■	■	■	66
9	Adapter plate for EN pressure gauge ¼ A4	■	■	■	■	66
10	Pressure gauge MA	■	■	■	■	93
11	Illuminating seal MC-LD	■	■	–	■	92
12	Plug socket with cable KMC	■	■	–	■	92
13	Plug socket MSSD-C	■	■	■ Included in scope of delivery	■	92
14	Connecting cable NEBU-M12G5	■	■	–	■	93
15	Connecting cable NEBU-M12W5	■	■	–	■	93
16	Sensor socket SIE-GD	■	■	–	■	93
17	Angled plug socket SIE-WD	■	■	–	■	93

1) The screws for the wall bracket on the reverse side are partially covered by the housing of this service unit. Depending on the configuration of the service unit combination, the screws will no longer be accessible. The mounting bracket MS9-WPM is therefore recommended for wall mounting. It can be used to attach a fully assembled combination to the pre-mounted wall bracket.

New
Variant EX2, UL1

On-off valves MS9-EE, MS series

Type codes

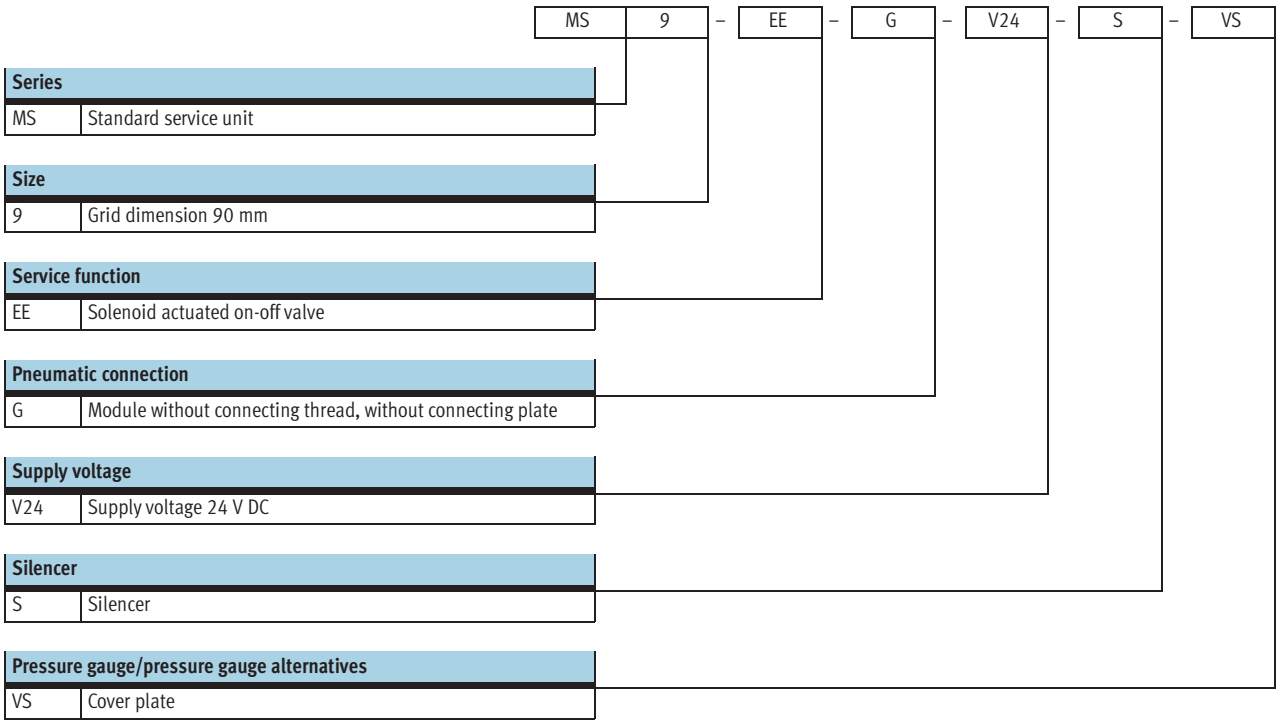

Additional variants can be ordered using the modular system ➔ 66

- Pneumatic connection
- Supply voltage
- Silencer
- Pressure gauge/pressure gauge alternatives
- Alternative pressure gauge scale
- Valve function
- Type of mounting
- EU certification
- UL certification
- Flow direction

On-off valves MS9-EE, MS series

Technical data

FESTO

2/2-way valve, single solenoid, closed

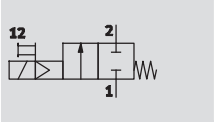

3/2-way valve, single solenoid, closed

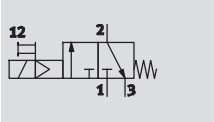

Flow rate
8,000 ... 18,000 l/min
Temperature range
–10 ... +60 °C
Pressure
3.5 ... 16 bar

- Solenoid actuated on-off valve for pressurising and venting pneumatic installations
- Ducted exhaust possible via a threaded connection with silencer
- With solenoid coil without plug socket
- 3 voltage ranges can be selected
- Non-detenting or detenting manual override
- Optional pressure gauge
- Optional device variant EX2 for use in potentially explosive areas in zones 2 and 22 (plug socket MSSD-C-24V-EX is included in the scope of delivery)

General technical data				
Pneumatic connection 1, 2	G¾ (Female thread)	G1 (Female thread)	G½ ... G1½ (With connecting plate AG...)	– (Module without connecting thread, without connecting plate G)
Pneumatic connection 3	G1			
Design	Piston spool valve			
Type of mounting	Via accessories			
	In-line installation			
Mounting position	Any			
Pressure display	Via pressure gauge for displaying output pressure			
	Via pressure gauge with red/green scale for displaying output pressure			
	G¼ prepared			
Valve function	2/2-way valve, single solenoid, closed			
	3/2-way valve, single solenoid, closed			
Exhaust air function	No flow control			
Reset method	Mechanical spring			
Type of control	Piloted			
Pilot air supply	Internal			
Sealing principle	Soft			

Note: This product conforms to ISO 1179-1 and ISO 228-1

Electrical data		
Coil characteristics	V24/V24P	24 V DC: 4.5 W; perm. voltage fluctuations ±10%
	V110	110 V AC: 50 Hz; pick-up power 11.5 W; holding power 8.9 W; perm. voltage fluctuations ±10% 110 V AC: 60 Hz; pick-up power 9.5 W; holding power 6.2 W; perm. voltage fluctuations ±10%
	V230	230 V AC: 50 Hz; pick-up power 11.5 W; holding power 9.1 W; perm. voltage fluctuations ±10% 230 V AC: 60 Hz; pick-up power 9.5 W; holding power 6.4 W; perm. voltage fluctuations ±10%
Electrical connection	V24/V110/V230	Plug socket, square design to EN 175301-803, type A
	V24P	Plug M12, 4-pin to DESINA
Protection class for solenoid coil		IP65
Duty cycle [%]		100

On-off valves MS9-EE, MS series

Technical data

FESTO

Flow rate characteristic values								
Pneumatic connection	Female thread		Connecting plate					None
	G¾	G1	AGD	AGE	AGF	AGG	AGH	G
Standard nominal flow rate qnN[1] [l/min]								
In main flow direction 1 → 2	14,500	18,000	8,000	14,000	18,000	18,000	18,000	18,000
In relief direction 2 → 3	14,900	14,100	16,500	14,400	13,800	13,200	13,200	14,100
C value [l/s*min]								
In main flow direction 1 → 2	59.59	76.90	32.75	57.50	75.65	75.51	75.17	–
In relief direction 2 → 3	55.11	53.54	56.22	54.07	52.73	51.06	51.36	–
b value								
In main flow direction 1 → 2	0.41	0.37	0.45	0.39	0.38	0.39	0.38	–
In relief direction 2 → 3	0.50	0.48	0.60	0.49	0.47	0.45	0.44	–

1) Measured at p1 = 6 bar and p2 = 5 bar, Δp = 1 bar

Operating and environmental conditions		
Operating pressure	[bar]	3.5 ... 16
Operating medium		Compressed air in accordance with ISO 8573-1:2010 [7:4:4]
Note on operating/pilot medium		Operation with lubricated medium possible (in which case lubricated operation will always be required)
Ambient temperature	[°C]	–10 ... +60
Temperature of medium	[°C]	–10 ... +60
Corrosion resistance class CRC[1]		2
Noise level	[dB (A)]	93[2] with silencer
Certification (variant UL1)		cULus recognized (OL)

1) Corrosion resistance class 2 according to Festo standard 940 070
Components subject to moderate corrosion stress. Externally visible parts with primarily decorative surface requirements which are in direct contact with a normal industrial environment or media such as coolants or lubricating agents.
2) Venting at 10 bar at a distance of 1 m.

ATEX	
EU certification	EX2
ATEX category gas	II 3G
Ex-ignition protection type gas	Ex nA IIC T5 X Gc
ATEX category dust	II 3D
EX-ignition protection type dust	Ex tc IIIC T85°C X Dc IP65
ATEX ambient temperature	–10 °C ≤ Ta ≤ +50 °C
CE mark (see declaration of conformity)	To EU Explosion Protection Directive (ATEX)

Weight [g]	
On-off valve	2,100
On-off valve with silencer S	2,300

On-off valves MS9-EE, MS series

Technical data

FESTO

Materials

Sectional view

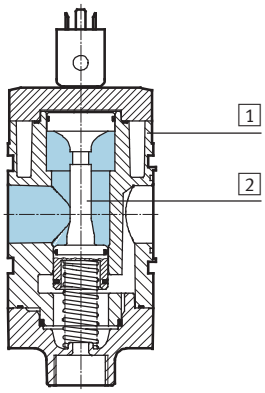

On-off valve	
1 Housing	Die-cast aluminium
2 Piston spool	POM
– Seals	NBR
Note on materials	RoHS-compliant

Dimensions – Basic version

Download CAD Data ➔ **www.festo.com/us/cad**

Module without connecting thread, without connecting plate G, with cover plate VS

Supply voltage V24/V110/V230

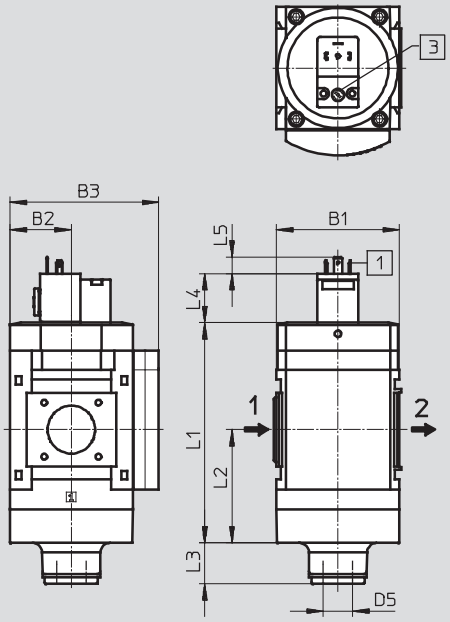

Supply voltage V24P

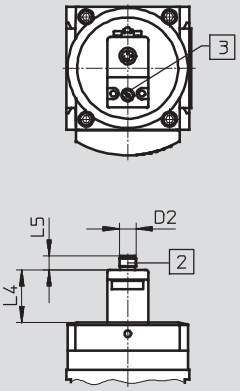

With silencer S

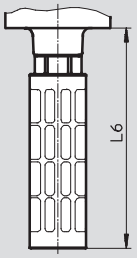

1 Plug connection to EN 175301-803
2 Plug connection M12, 4-pin to DESINA
3 Manual override

➔ Flow direction

Type	B1	B2	B3	D2	D5	L1	L2	L3		L4	L5	L6
								2/2-way valve	3/2-way valve			
MS9-EE-G-V24/V110/V230	90	45	109	–	G1	161	83	30	23	36	12	189
MS9-EE-G-V24P				M12x1						39	10	

On-off valves MS9-EE, MS series

Technical data

FESTO

Dimensions – Connecting thread/connecting plate Download CAD Data ➔ **www.festo.com/us/cad**

With female thread ¾ or 1

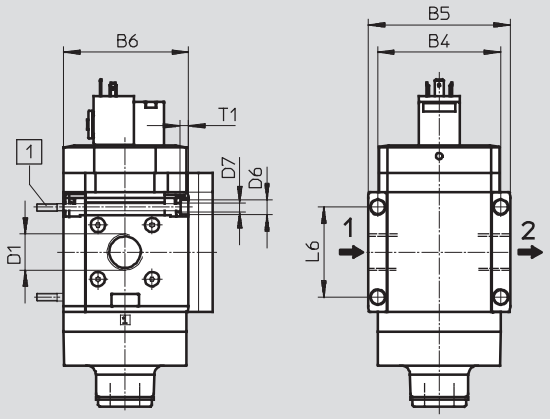

With connecting plate AG...

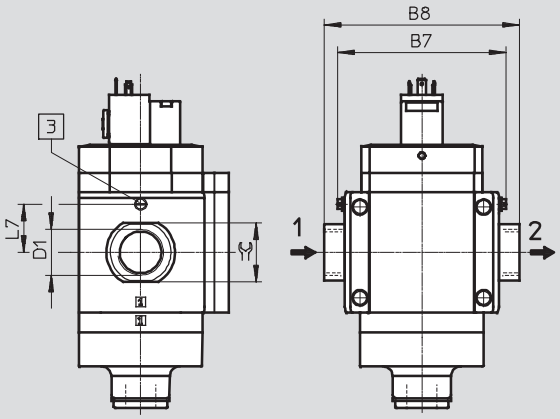

[1] Mounting screw M6xmin.90 to DIN 912 (not included in the scope of delivery) for wall mounting without mounting bracket

[3] Earthing screw M4x8 (only with MS9-...-EX2)

➔ Flow direction

Type	B4	B5	B6	B7		B8	D1	D6	D7	L6	L7	T1	⌀
					EX2						EX2		
MS9-EE-¾	90	104	91.5	–	–	–	G¾	11	6.5	66	–	6	–
MS9-EE-1							G1						
MS9-EE-AGD	–	–	–	112	122	132	G½	–	–	–	35	–	30
MS9-EE-AGE						132	G¾						36
MS9-EE-AGF						142	G1						41
MS9-EE-AGG						162	G1¼						50
MS9-EE-AGH						176	G1½						55

Note: This product conforms to ISO 1179-1 and ISO 228-1

On-off valves MS9-EE, MS series

Technical data

FESTO

Dimensions – Pressure gauge/pressure gauge alternatives Download CAD Data ➔ **www.festo.com/us/cad**

Integrated MS pressure gauge with standard scale AG or red/green scale RG

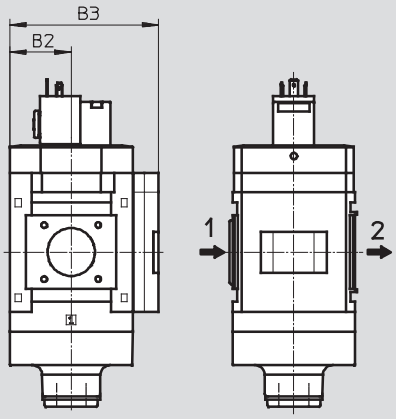

Adapter plate A4 for EN pressure gauge ¼, without pressure gauge

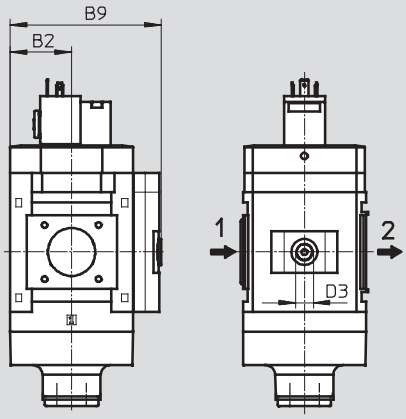

➔ Flow direction

Type	B2	B3	B9	D3
MS9-EE-...-AG/RG	45	109	–	–
MS9-EE-...-A4		–	110	G¼

Note: This product conforms to ISO 1179-1 and ISO 228-1

Ordering data

3/2-way valve, with silencer, supply voltage 24 V DC

Size	Connection	Part No.	Type
MS9	–	**562940**	**MS9-EE-G-V24-S-VS**

On-off valves MS9-EE, MS series

Ordering data – Modular products

FESTO

M **Mandatory data**

Module No.	Series	Size		Function		Pneumatic connection		Supply voltage
562177	MS	9		EE		¾, 1, AGD, AGE, AGF, AGG, AGH, G		V24, V24P, V110, V230
Ordering example								
562177	**MS**	**9**	–	**EE**	–	**1**	–	**V24**

Ordering table

Grid dimension [mm]		90	Conditions	Code		Enter code
M	Module No.	**562177**				
	Series	Standard		**MS**		MS
	Size	9		**9**		9
	Function	Electrical on-off valve		**-EE**		-EE
	Pneumatic connection	Female thread G¾	1	**-¾**		
		Female thread G1	1	**-1**		
		Connecting plate G½		**-AGD**		
		Connecting plate G¾		**-AGE**		
		Connecting plate G1		**-AGF**		
		Connecting plate G1¼		**-AGG**		
		Connecting plate G1½		**-AGH**		
		Module without connecting thread, without connecting plate	1	**-G**		
	Supply voltage	24 V DC (pin allocation to EN 175301), 16 bar		**V24**		
		24 V DC plug (connection pattern M12 to DESINA), 16 bar	1	**V24P**		
		110 V AC (pin allocation to EN 175301), 16 bar	1	**V110**		
		230 V AC (pin allocation to EN 175301), 16 bar	1	**V230**		

1 **¾, 1, G, V24P, V110, V230, WPM**
Not with EU certification EX2

Transfer order code

562177	**MS**	**9**	–	**EE**	–		–	

On-off valves MS9-EE, MS series

FESTO

Ordering data – Modular products

➔	0 Options	M Mandatory data		0 Options				
	Silencer	Pressure gauge/pressure gauge alternatives	Alternative pressure gauge scale	Valve function	Type of mounting	EU certification	UL certification	Flow direction
	S	AG, VS, A4, RG	PSI, MPA, BAR	- 2	WP, WPM, WPB	EX2	UL1	Z
–	S	AG	BAR					

Ordering table

Grid dimension [mm]		90	Conditions	Code	Enter code
0	Silencer	Silencer		-S	
M	Pressure gauge/pressure gauge alternatives	MS pressure gauge		-AG	
		Cover plate		-VS	
		Adapter plate for EN pressure gauge ¼, without pressure gauge		-A4	
		Integrated pressure gauge, red/green scale	2	-RG	
	Alternative pressure gauge scale	Psi	3	-PSI	
		MPa	3	-MPA	
		Bar	3	-BAR	
0	Valve function	Standard (3/2-way valve)		-	
		2/2-way valve	4	-2	
	Type of mounting	Mounting bracket	5	-WP	
		Mounting bracket	1 5	-WPM	
		Mounting bracket for large wall gap	5	-WPB	
	EU certification	II 3GD to EU Directive 94/9/EG		-EX2	
	UL certification	cULus, ordinary location for Canada and USA	6	-UL1	
	Flow direction	Flow direction from right to left		-Z	

1 **¾, 1, G, V24P, V110, V230, WPM** Not with EU certification EX2

2 **RG** Not with alternative pressure gauge scale PSI
PSI scale serves only as an auxiliary scale

3 **PSI, MPA, BAR** Not with pressure gauge/pressure gauge alternatives VS, A4

4 **2** Not with silencer S

5 **WP, WPM, WPB** Not with module G

6 **UL1** Not with supply voltage V110, V230

Transfer order code

–			–		–		–		–		–		–	

On-off valves MS12-EM, MS series

Peripherals overview

On-off valves MS12-EM

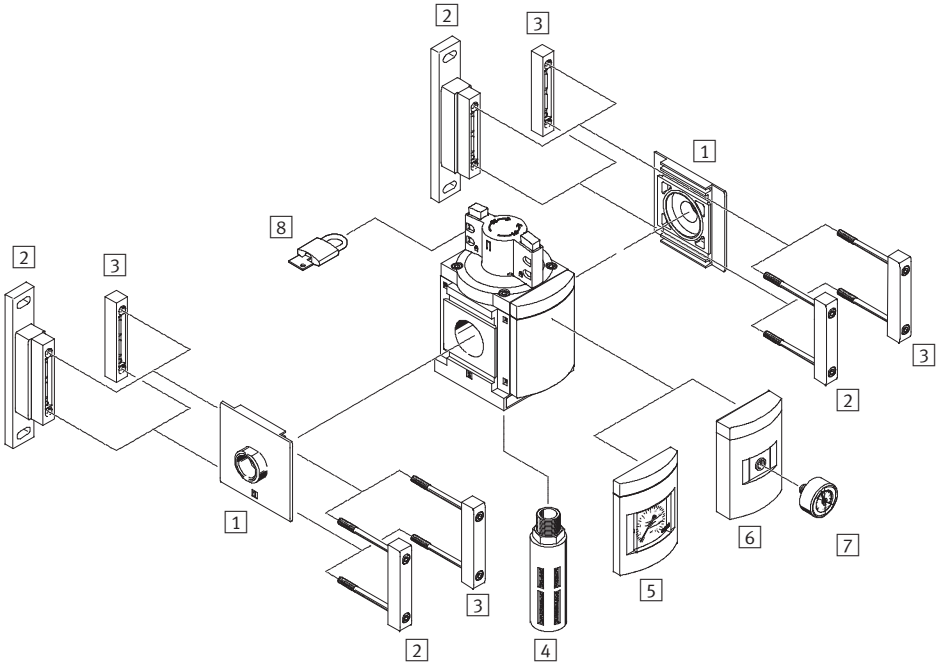

Note

Additional accessories:
- Module connector for combination with size MS9 ➔ Internet: armv

Mounting attachments and accessories

		➔ Page/Internet
1	Connecting plate MS12-AG...	ms12-ag
2	Mounting bracket MS12-WP	ms12-wp
3	Module connector MS12-MV	ms12-mv
4	Silencer U	93
5	MS pressure gauge AG	73
6	Adapter for EN pressure gauge ¼ A4	73
7	Pressure gauge MA	93
8	Padlock LRVS-D	93

On-off valves MS12-EM, MS series

Type codes

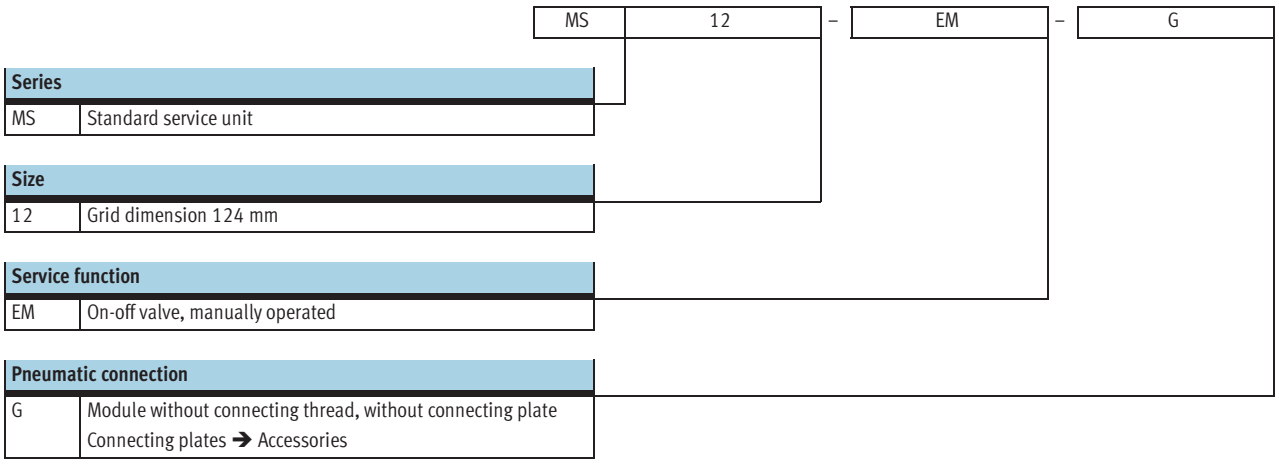

Series	
MS	Standard service unit

Size	
12	Grid dimension 124 mm

Service function	
EM	On-off valve, manually operated

Pneumatic connection	
G	Module without connecting thread, without connecting plate Connecting plates ➔ Accessories

Further variants can be ordered using the modular system ➔ 73

- Pneumatic connection
- Silencer
- Pressure gauge/pressure gauge alternatives
- Alternative pressure gauge scale
- Type of mounting
- Flow direction

On-off valves MS12-EM, MS series

Technical data

Function

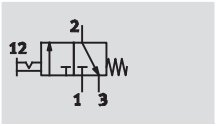

Flow rate

25,000 ... 32,000 l/min

Temperature range

–10 ... +60 °C

Pressure

0 ... 20 bar

- Manually operated on-off valve for pressurising and venting pneumatic installations
- Ducted exhaust possible via a threaded connection with silencer
- The switching position is immediately recognisable
- Actuator secured by locking the rotary knob
- Commercially available padlock can be used for security

General technical data		
Pneumatic connection 1, 2	G1 ... G2 (With connecting plate AG...)	– (Module without connecting thread, without connecting plate G)
Pneumatic connection 3	G1	
Design	Piston spool valve	
Type of mounting	Via accessories	
	In-line installation	
Assembly position	Any	
Valve function	3/2-way valve, double solenoid	
Exhaust function	Without flow control	
Switching position display	Knob actuator direction = flow direction	
Type of actuation	Direct	
Direction of flow	Non-reversible	

Note: This product conforms to ISO 1179-1 and ISO 228-1

Standard nominal flow rate qnN[1] [l/min]	
In main flow direction 1 → 2	25,000 ... 32,000
In relief direction 2 → 3	13,000

1) Measured at p1 = 6 bar and Δp = 1 bar

Operating and environmental conditions		
Operating pressure	[bar]	0 ... 20
Operating medium		Compressed air in accordance with ISO 8573-1:2010 [–:–:–]
Ambient temperature	[°C]	–10 ... +60
Temperature of medium	[°C]	–10 ... +60
Corrosion resistance	CRC[1]	2

1) Corrosion resistance class 2 according to Festo standard 940 070
Components requiring moderate corrosion resistance. Externally visible parts with primarily decorative surface requirements which are in direct contact with a normal industrial environment or media such as coolants or lubricating agents.

On-off valves MS12-EM, MS series

Technical data

Weights [g]	
On-off valve	3,900
On-off valve with silencer S	4,000

Materials

Sectional view

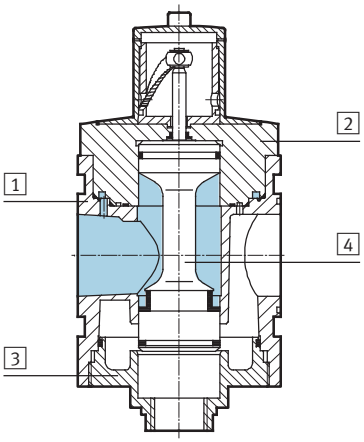

On-off valve		
1	Body	Die-cast aluminium
2	Cap, top	Aluminium
3	Cap, bottom	Aluminium
4	Valve spool	Stainless steel, POM, NBR
–	Springs	Steel
–	Covers/cover plates	PA
–	Seals	NBR
–	Connecting plate, module connector, mounting bracket	Die-cast aluminium
Note on materials		Free of copper and PTFE (not with variant AG)

Dimensions – Basic version

Download CAD Data ➔ **www.festo.com/us/cad**

Module without connecting thread, without connecting plate G, with cover plate

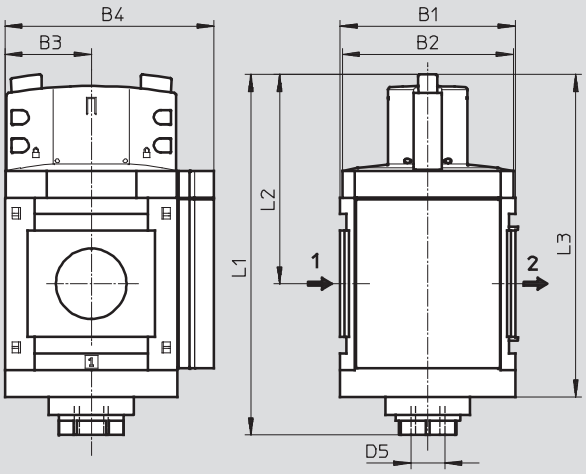

➔ Flow direction

Type	B1	B2	B3	B4	L1	L2	L3	D5
MS12-EM-G	124	122	61	148	255	148	228	G1

Dimensions – Silencer Download CAD Data ➔ **www.festo.com/us/cad**

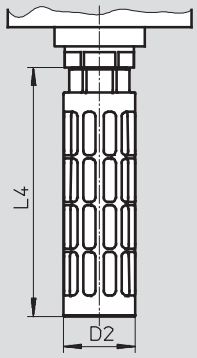

Type	D2 ∅	L4
MS12-EM-...-S	47.8	165.5

Dimensions – Pressure gauge/pressure gauge alternatives Download CAD Data ➔ **www.festo.com/us/cad**

Integrated MS pressure gauge AG, display unit [bar]

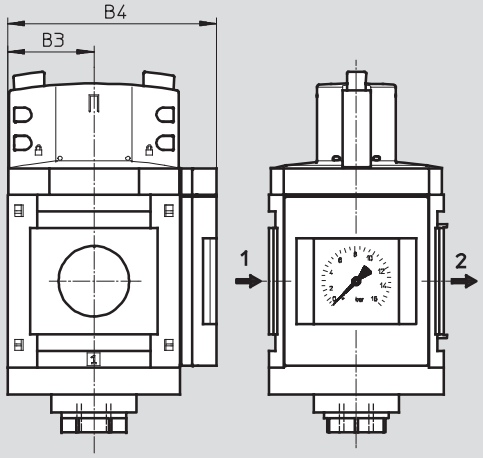

Adapter A4 for EN pressure gauge ¼, without pressure gauge

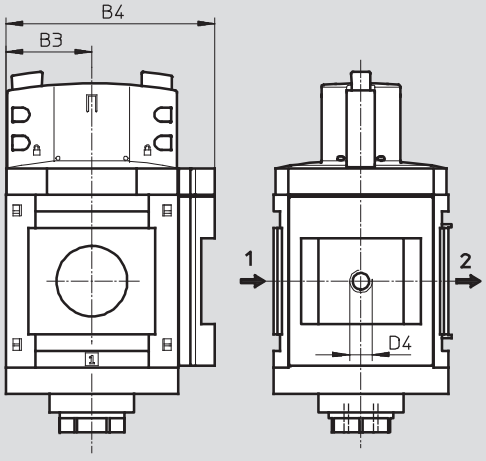

➔ Flow direction

Type	B3	B4	D4
MS12-EM-...-AG	61	148	–
MS12-EM-...-A4	61	148	G¼

Note: This product conforms to ISO 1179-1 and ISO 228-1

Ordering data

Size	Connection	Part No.	Type
MS12	–	**541495**	**MS12-EM-G**[1)]

1) Free of copper and PTFE

Note: This product conforms to ISO 1179-1 and ISO 228-1

On-off valves MS12-EM, MS series

Ordering data – Modular products

FESTO

M Mandatory data					O Options				
Module No.	Series	Size	Function	Pneumatic connection	Silencer	Pressure gauge/pressure gauge alternatives	Alternative pressure gauge scale	Type of mounting	Flow direction
535031	MS	12	EM	AGF, AGG, AGH, AGI, G	S	AG, A4	PSI, MPA	WP	Z
Order example									
535031	MS	12	EM	G	S	AG	PSI		Z

Ordering table

Grid dimension [mm]		124	Conditions	Code		Enter code
M	Module No.	535031				
	Series	Standard		MS		MS
	Size	12		12		12
	Function	On-off valve, manual		-EM		-EM
	Pneumatic connection	Connecting plate G1		-AGF		
		Connecting plate G1¼		-AGG		
		Connecting plate G1½		-AGH		
		Connecting plate G2		-AGI		
		Module without connecting thread, without connecting plate		-G		
O	Silencer	Silencer		-S		
	Pressure gauge/pressure gauge alternatives	MS pressure gauge, bar		-AG		
		Adapter plate for EN pressure gauge ¼, without pressure gauge		-A4		
	Alternative pressure gauge scale	psi	1	-PSI		
		MPa	1	-MPA		
	Type of mounting	Mounting bracket	2	-WP		
	Flow direction	Flow direction from right to left		-Z		

1 **PSI, MPA** Only with pressure gauge AG.

2 **WP** Only with connecting plate AGF, AGG, AGH or AGI.

Transfer order code

535031	MS	12	–	EM	–		–		–		–		–		–	

On-off valves MS12-EE, MS series

Peripherals overview

On-off valves MS12-EE

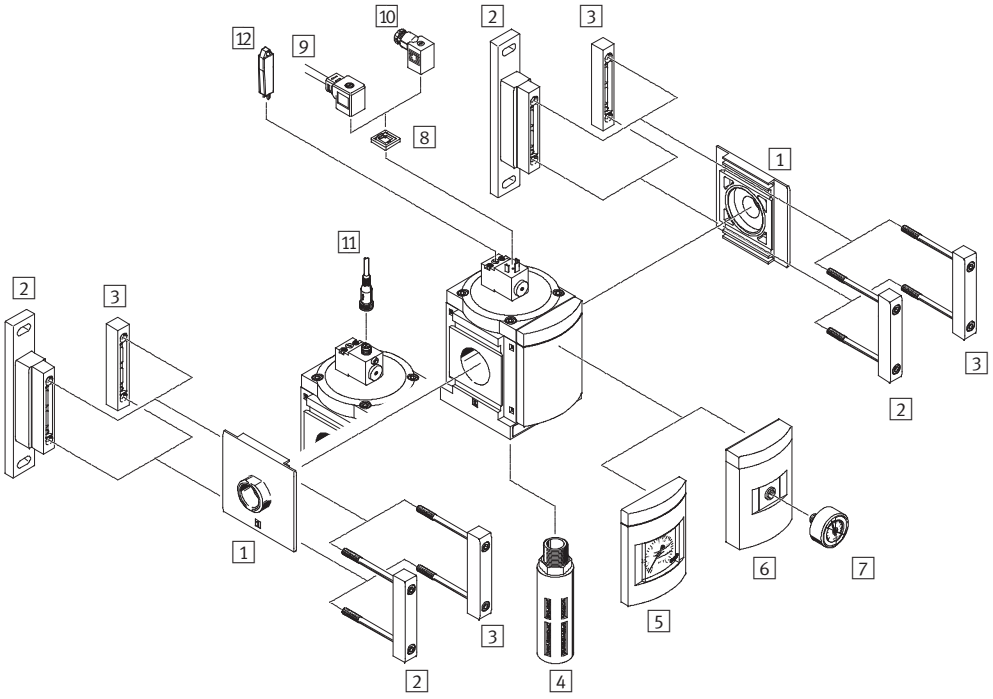

Note

Additional accessories:
- Module connector for combination with size MS9 ➔ Internet: armv

Mounting attachments and accessories

		➔ Page/Internet
1	Connecting plate MS12-AG...	ms12-ag
2	Mounting bracket MS12-WP	ms12-wp
3	Module connector MS12-MV	ms12-mv
4	Silencer U	93
5	MS pressure gauge AG	79
6	Adapter for EN pressure gauge ¼ A4	79
7	Pressure gauge MA	93
8	Illuminating seal MC-LD	92
9	Plug socket with cable KMC	92
10	Plug socket MSSD-C	92
11	Connecting cable NEBU-M12...-LE4	93
12	Manual override AHB-MD/MF/MV	92

On-off valves MS12-EE, MS series

Type codes

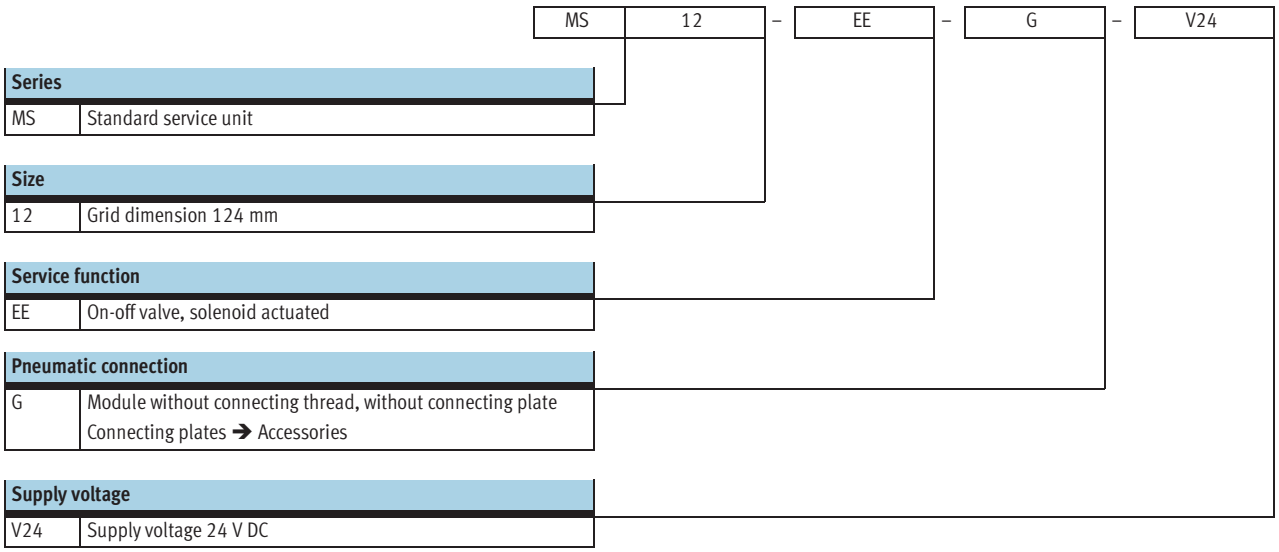

Further variants can be ordered using the modular system ➔ 79

- Pneumatic connection
- Supply voltage
- Silencer
- Pressure gauge/pressure gauge alternatives
- Alternative pressure gauge scale
- Type of mounting
- Flow direction

On-off valves MS12-EE, MS series

Technical data

Function

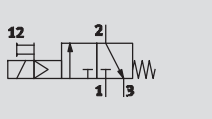

Flow rate
25,000 ... 32,000 l/min
Temperature range
–10 ... +50 °C
Pressure
3 ... 16 bar

- Solenoid actuated on-off valve for pressurising and venting pneumatic installations
- With solenoid coil without plug socket
- Three voltage ranges can be selected
- Ducted exhaust possible via a threaded connection with silencer
- Non-detenting and detenting manual override

General technical data		
Pneumatic connection 1, 2	G1 ... G2 (With connecting plate AG...)	– (Module without connecting thread, without connecting plate G)
Pneumatic connection 3	G1	
Design	Piston spool valve	
Type of mounting	Via accessories	
	In-line installation	
Assembly position	Any	
Valve function	3/2-way valve, single solenoid, closed	
Exhaust function	Without flow control	
Type of reset	Mechanical spring	
Switching position display	Via accessories	
	LED (with variant V24P)	
Type of actuation	Piloted	
Pilot air supply	Internal	
Direction of flow	Non-reversible	

Note: This product conforms to ISO 1179-1 and ISO 228-1

Electrical data		
Coil characteristics	V24/V24P	24 V DC: 4.5 W; perm. voltage fluctuations ±10%
	V110	110 V AC: 50 Hz; pick-up power 11.5 W; holding power 8.9 W; perm. voltage fluctuations ±10%
		110 V AC: 60 Hz; pick-up power 9.5 W; holding power 6.2 W; perm. voltage fluctuations ±10%
	V230	230 V AC: 50 Hz; pick-up power 11.5 W; holding power 9.1 W; perm. voltage fluctuations ±10%
		230 V AC: 60 Hz; pick-up power 9.5 W; holding power 6.4 W; perm. voltage fluctuations ±10%
Electrical connection	V24/V110/V230	Plug, square design to EN 175301-803, type A
	V24P	Plug M12, 4-pin to DESINA
Protection class for solenoid coil		IP65
Duty cycle [%]		100

Standard nominal flow rate qnN[1] [l/min]	
In main flow direction 1 ⇢ 2	25,000 ... 32,000
In relief direction 2 ⇢ 3	8,900

1) Measured at p1 = 6 bar and Δp = 1 bar

On-off valves MS12-EE, MS series

Technical data

Operating and environmental conditions		
Operating pressure	[bar]	3 ... 16
Operating medium		Compressed air in accordance with ISO 8573-1:2010 [7:4:4]
		Inert gases
Note on operating/pilot medium		Operation with lubricated medium possible (in which case lubricated operation will always be required)
Ambient temperature	[°C]	–10 ... +50
Temperature of medium	[°C]	–10 ... +50
Corrosion resistance	CRC[1)]	2

1) Corrosion resistance class 2 according to Festo standard 940 070
Components requiring moderate corrosion resistance. Externally visible parts with primarily decorative surface requirements which are in direct contact with a normal industrial environment or media such as coolants or lubricating agents.

Weights [g]	
On-off valve	3,800
On-off valve with silencer S	3,900

Materials

Sectional view

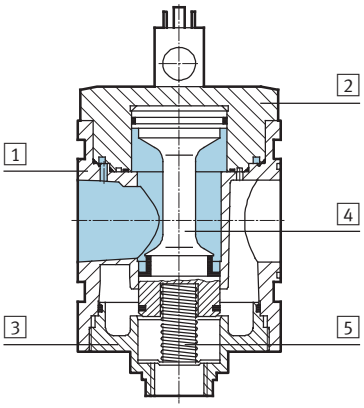

On-off valve		
1	Body	Die-cast aluminium
2	Cap, top	Aluminium
3	Cap, bottom	Aluminium
4	Valve spool	Stainless steel, POM, NBR
5	Springs	Steel
–	Covers/cover plates	PA
–	Seals	NBR
–	Connecting plate, module connector, mounting bracket	Die-cast aluminium
Note on materials		Free of copper and PTFE (not with variant AG)

Dimensions – Basic version

Download CAD Data ➔ **www.festo.com/us/cad**

Module without connecting thread, without connecting plate G, with cover plate

MS12-EE-G-V24/V110/V230

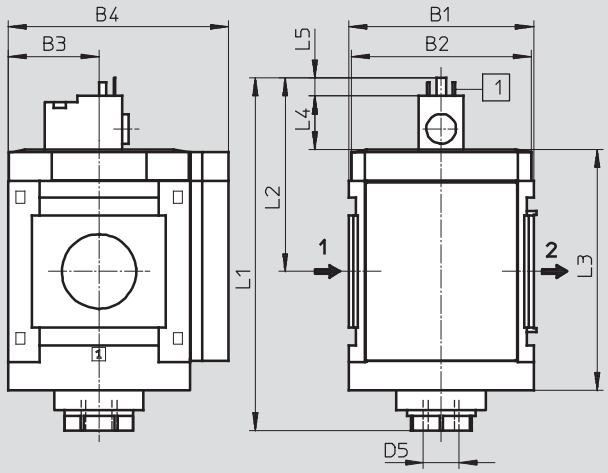

MS12-EE-G-V24P

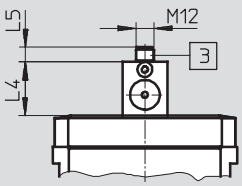

1 Plug connection to EN 175301-803
3 Plug connection M12, 4-pin to DESINA

➔ Flow direction

Type	B1	B2	B3	B4	L1	L2	L3	L4	L5	D5
MS12-EE-G-V24/V110/V230	124	122	61	148	237	130	162	35.7	12.3	G1
MS12-EE-G-V24P								36	10	

Dimensions – Silencer Download CAD Data ➔ **www.festo.com/us/cad**

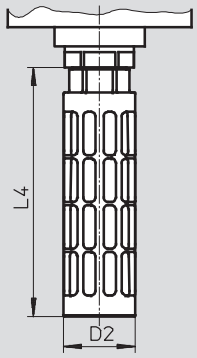

Type	D2 ∅	L4
MS12-EE-...-S	47.8	165.5

Dimensions – Pressure gauge/pressure gauge alternatives Download CAD Data ➔ **www.festo.com/us/cad**

Integrated MS pressure gauge AG, display unit [bar]

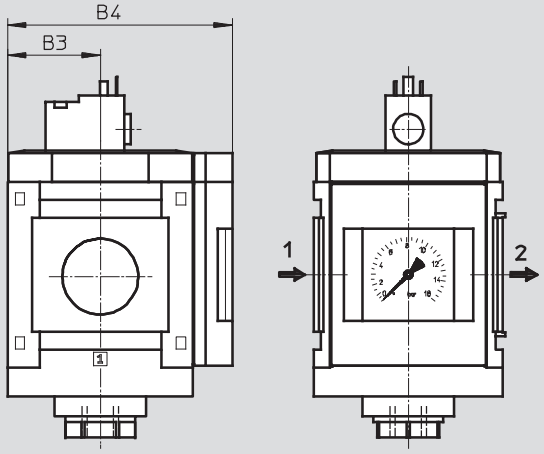

Adapter A4 for EN pressure gauge ¼, without pressure gauge

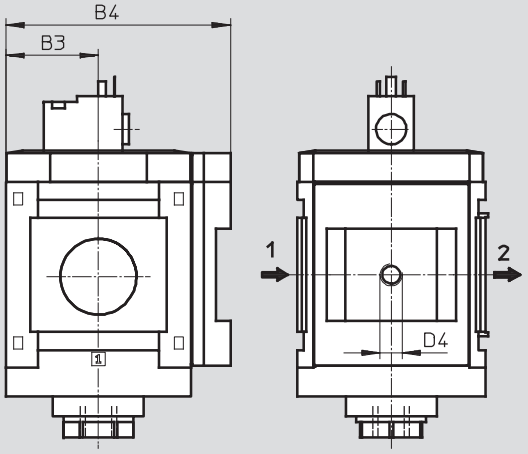

➔ Flow direction

Type	B3	B4	D4
MS12-EE-...-AG	61	148	–
MS12-EE-...-A4	61	148	G¼

Note: This product conforms to ISO 1179-1 and ISO 228-1

Ordering data

Size	Connection	Supply voltage 24 V DC	
		Part No.	Type
MS12	–	**541496**	**MS12-EE-G-V24**[1)]

1) Free of copper and PTFE

Note: This product conforms to ISO 1179-1 and ISO 228-1

On-off valves MS12-EE, MS series

Ordering data – Modular products

FESTO

M Mandatory data						O Options				
Module No.	Series	Size	Function	Pneumatic connection	Supply voltage	Silencer	Pressure gauge/pressure gauge alternatives	Alternative pressure gauge scale	Type of mounting	Flow direction
535032	MS	12	EE	AGF, AGG, AGH, AGI, G	V24, V24P, V110, V230	S	AG, A4	PSI, MPA	WP	Z
Order example										
535032	MS	12	EE	AGI	V110	S	AG	MPA	WP	

Ordering table

Grid dimension [mm]		124	Conditions	Code		Enter code
M	Module No.	535032				
	Series	Standard		MS		MS
	Size	12		12		12
	Function	On-off valve, electrical		-EE		-EE
	Pneumatic connection	Connecting plate G1		-AGF		
		Connecting plate G1¼		-AGG		
		Connecting plate G1½		-AGH		
		Connecting plate G2		-AGI		
		Module without connecting thread, without connecting plate		G		
	Supply voltage	24 V DC (connection pattern to EN 175301), 16 bar		-V24		
		24 V DC plug (connection pattern M12 to DESINA), 16 bar		-V24P		
		110 V AC (connection pattern to EN 175301), 16 bar		-V110		
		230 V AC (connection pattern to EN 175301), 16 bar		-V230		
O	Silencer	Silencer		-S		
	Pressure gauge/pressure gauge alternatives	MS pressure gauge, bar		-AG		
		Adapter plate for EN pressure gauge ¼, without pressure gauge		-A4		
	Alternative pressure gauge scale	psi	1	-PSI		
		MPa	1	-MPA		
	Type of mounting	Mounting bracket	2	-WP		
	Flow direction	Flow direction from right to left		-Z		

1 **PSI, MPA** Only with pressure gauge AG.

2 **WP** Only with connecting plate AGF, AGG, AGH or AGI.

Transfer order code

535032	MS	12	–	EE	–		–		–		–		–		–	

Soft-start valves MS12-DL, MS series

Peripherals overview

Soft-start valves MS12-DL

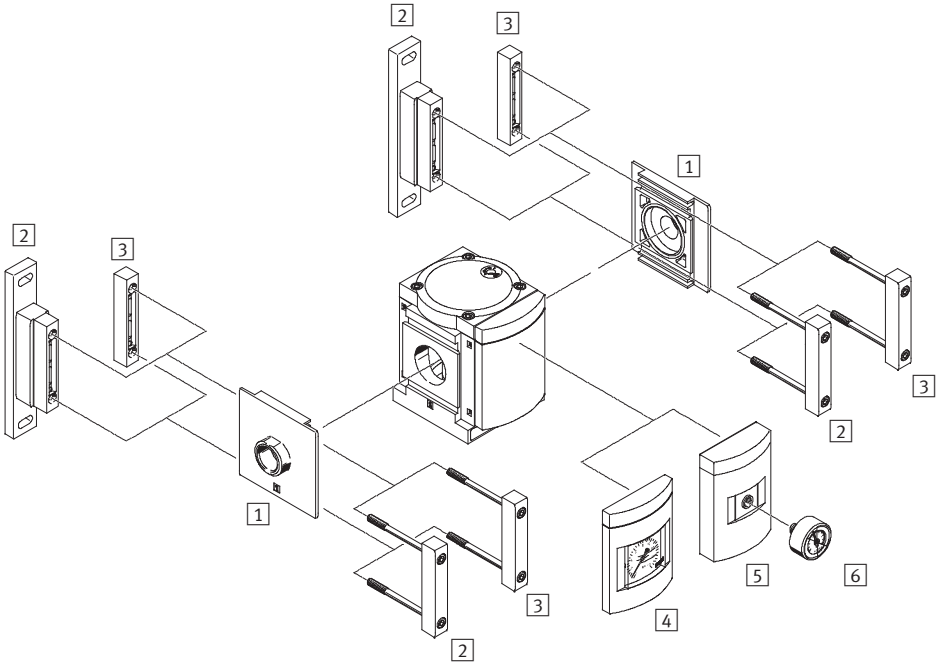

Note

Additional accessories:
- Module connector for combination with size MS9 ➔ Internet: armv

Mounting attachments and accessories

		➔ Page/Internet
1	Connecting plate MS12-AG...	ms12-ag
2	Mounting bracket MS12-WP	ms12-wp
3	Module connector MS12-MV	ms12-mv
4	MS pressure gauge AG	85
5	Adapter for EN pressure gauge ¼ A4	85
6	Pressure gauge MA	93

Soft-start valves MS12-DL, MS series

Type codes

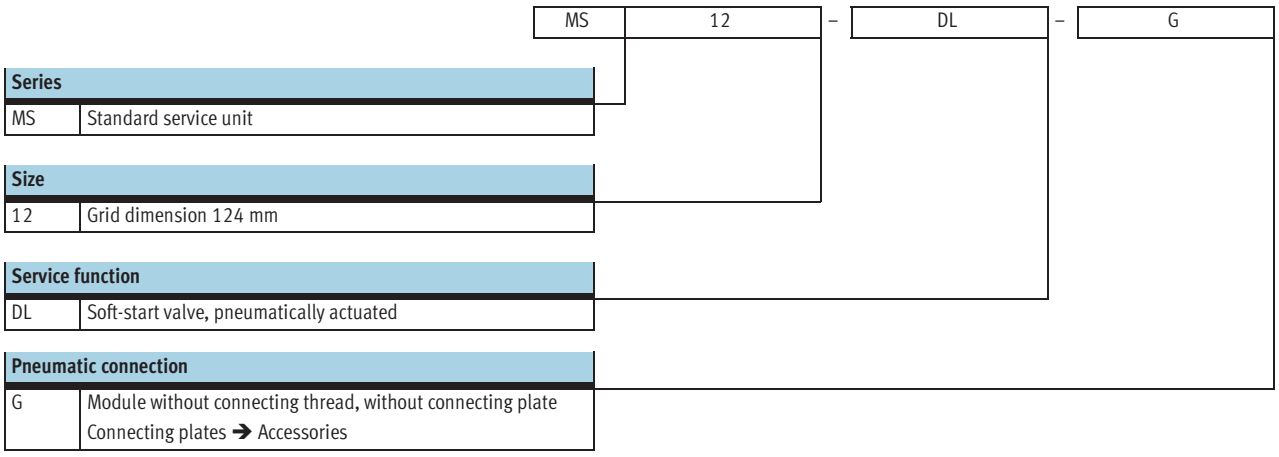

Series	
MS	Standard service unit

Size	
12	Grid dimension 124 mm

Service function	
DL	Soft-start valve, pneumatically actuated

Pneumatic connection	
G	Module without connecting thread, without connecting plate Connecting plates ➔ Accessories

Further variants can be ordered using the modular system ➔ 85

- Pneumatic connection
- Pressure gauge/pressure gauge alternatives
- Alternative pressure gauge scale
- Type of mounting
- Flow direction

Soft-start valves MS12-DL, MS series

Technical data

Function

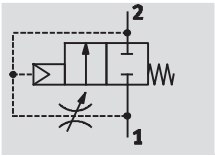

Flow rate

25,000 ... 42,000 l/min

Temperature range

–10 ... +60 °C

Pressure

2 ... 20 bar

The duration of the pressure build-up is adjusted using the restrictor attached to the valve cap.

The output pressure p2 rises slowly in accordance with the restrictor setting. The main seat opens when the switch-through pressure is reached.

- Pneumatically actuated soft-start valve for slowly pressurising and venting pneumatic installations (for use with on-off valves EM and EE)
- The drives advance slowly and reliably into the initial position
- Sudden and erratic movements are avoided
- Pressure switching approx. 50% of operating pressure
- Adjustable switching time delay

General technical data		
Pneumatic connection 1, 2	G1 ... G2 (With connecting plate AG...)	– (Module without connecting thread, without connecting plate G)
Design	Piston poppet valve	
Type of mounting	Via accessories	
	In-line installation	
Assembly position	Any	
Valve function	2/2-way valve	
Exhaust function	Flow control	
Type of reset	Mechanical spring	
Type of actuation	Direct	
Pilot air supply	Internal	
Direction of flow	Non-reversible	

Note: This product conforms to ISO 1179-1 and ISO 228-1

Standard nominal flow rate qnN[1] [l/min]	
In main flow direction 1 ⇢ 2	25,000 ... 42,000
In relief direction 2 ⇢ 1	25,000 ... 42,000

1) Measured at p1 = 6 bar and p2 = 5 bar, Δp = 1 bar

Soft-start valves MS12-DL, MS series

Technical data

Operating and environmental conditions		
Operating pressure	[bar]	2 ... 20
Operating medium		Compressed air in accordance with ISO 8573-1:2010 [7:–:–]
Ambient temperature	[°C]	–10 ... +60
Temperature of medium	[°C]	–10 ... +60
Corrosion resistance	CRC[1)]	2

1) Corrosion resistance class 2 according to Festo standard 940 070
Components requiring moderate corrosion resistance. Externally visible parts with primarily decorative surface requirements which are in direct contact with a normal industrial environment or media such as coolants or lubricating agents.

Weights [g]	
Soft-start valve	3,600

Materials

Sectional view

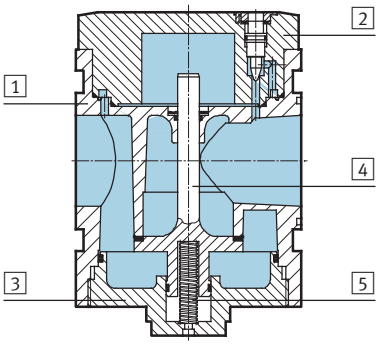

Soft-start valve		
1	Body	Die-cast aluminium
2	Cap, top	Aluminium
3	Cap, bottom	Aluminium
4	Valve stem	Aluminium, NBR
5	Springs	Steel
–	Covers/cover plates	PA
–	Seals	NBR
–	Connecting plate, module connector, mounting bracket	Die-cast aluminium
Note on materials		Free of copper and PTFE (not with variant AG)

Switching point – Pressure p as a function of time t

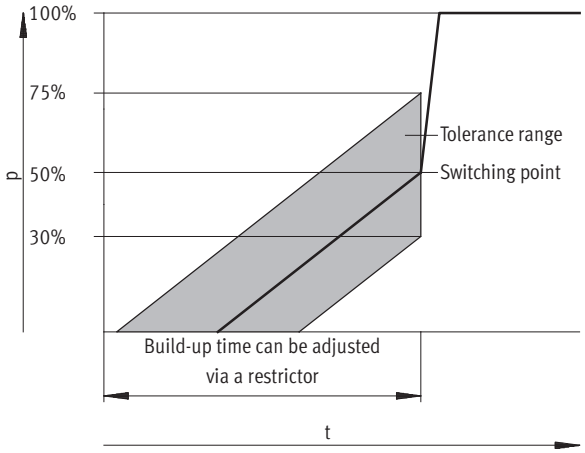

Note

The tolerance specification +25%/–20% of the switching point refers to the operating pressure p1.

Example: at an operating pressure of 4 bar a switching point of 1.2 bar to 3.0 bar is permitted.

Dimensions – Basic version Download CAD Data ➔ **www.festo.com/us/cad**

Module without connecting thread, without connecting plate G, with cover plate

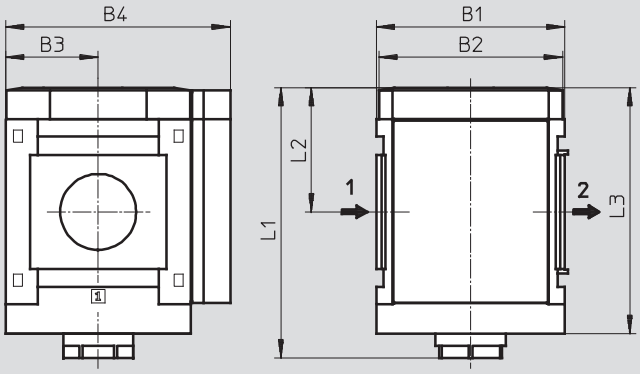

➔ Flow direction

Type	B1	B2	B3	B4	L1	L2	L3
MS12-DL-G	124	122	61	148	178	82	162

Dimensions – Pressure gauge/pressure gauge alternatives Download CAD Data ➔ **www.festo.com/us/cad**

Integrated MS pressure gauge AG, display unit [bar]

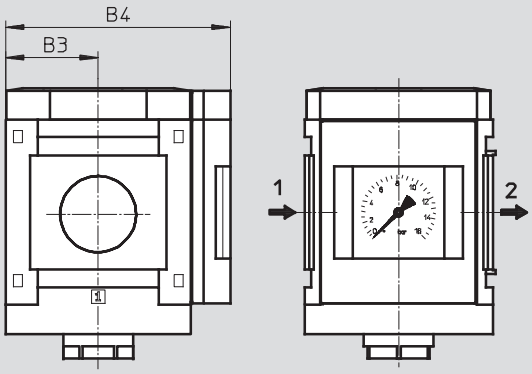

Adapter A4 for EN pressure gauge ¼, without pressure gauge

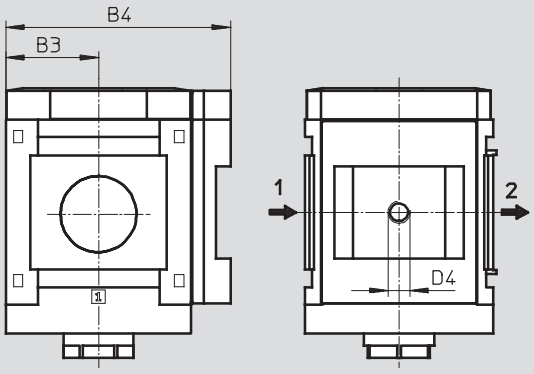

➔ Flow direction

Type	B3	B4	D4
MS12-DL-...-AG	61	148	–
MS12-DL-...-A4	61	148	G¼

Note: This product conforms to ISO 1179-1 and ISO 228-1

Ordering data

Size	Connection	Part No.	Type
MS12	–	**541497**	**MS12-DL-G**[1)]

1) Free of copper and PTFE

Note: This product conforms to ISO 1179-1 and ISO 228-1

Soft-start valves MS12-DL, MS series

Ordering data – Modular products

FESTO

M Mandatory data					O Options			
Module No.	**Series**	**Size**	**Function**	**Pneumatic connection**	**Pressure gauge/pressure gauge alternatives**	**Alternative pressure gauge scale**	**Type of mounting**	**Flow direction**
535033	MS	12	DL	AGF, AGG, AGH, AGI, G	AG, A4	PSI, MPA	WP	Z
Order example								
535033	**MS**	**12** –	**DL** –	**AGI** –	**AG** –	**MPA** –	**WP** –	**Z**

Ordering table

Grid dimension [mm]		124	Conditions	Code		Enter code
M	Module No.	**535033**				
	Series	Standard		**MS**		MS
	Size	12		**12**		12
	Function	Soft-start valve, pneumatic		**-DL**		-DL
	Pneumatic connection	Connecting plate G1		**-AGF**		
		Connecting plate G1¼		**-AGG**		
		Connecting plate G1½		**-AGH**		
		Connecting plate G2		**-AGI**		
		Module without connecting thread, without connecting plate		**-G**		
O	Pressure gauge/pressure gauge alternatives	MS pressure gauge, bar		**-AG**		
		Adapter plate for EN pressure gauge ¼, without pressure gauge		**-A4**		
	Alternative pressure gauge scale	psi	1	**-PSI**		
		MPa	1	**-MPA**		
	Type of mounting	Mounting bracket	2	**-WP**		
	Flow direction	Flow direction from right to left		**-Z**		

1 **PSI, MPA** Only with pressure gauge AG.

2 **WP** Only with connecting plate AGF, AGG, AGH or AGI.

Transfer order code

535033	**MS**	**12**	–	**DL**	–		–		–		–		–

Soft-start valves MS12-DE, MS series

Peripherals overview

Soft-start valves MS12-DE

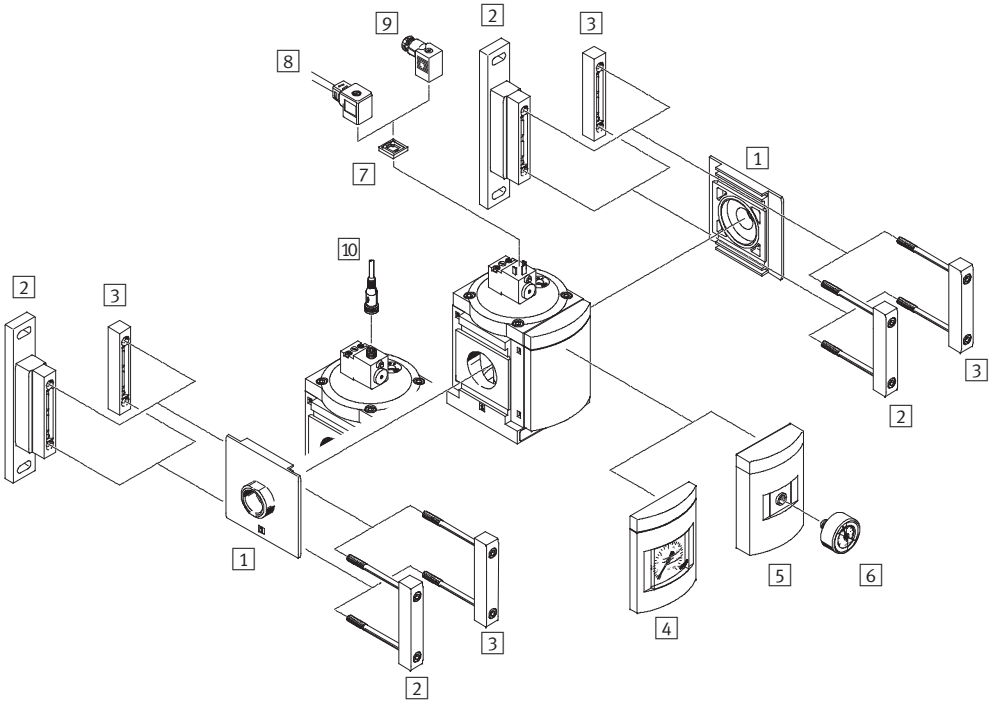

Note

Additional accessories:
- Module connector for combination with size MS9 ➔ Internet: armv

Mounting attachments and accessories		
		➔ Page/Internet
1	Connecting plate MS12-AG...	ms12-ag
2	Mounting bracket MS12-WP	ms12-wp
3	Module connector MS12-MV	ms12-mv
4	MS pressure gauge AG	91
5	Adapter for EN pressure gauge ¼ A4	91
6	Pressure gauge MA	93
7	Illuminating seal MC-LD	92
8	Plug socket with cable KMC	92
9	Plug socket MSSD-C	92
10	Connecting cable NEBU-M12...-LE4	93

Soft-start valves MS12-DE, MS series

Type codes

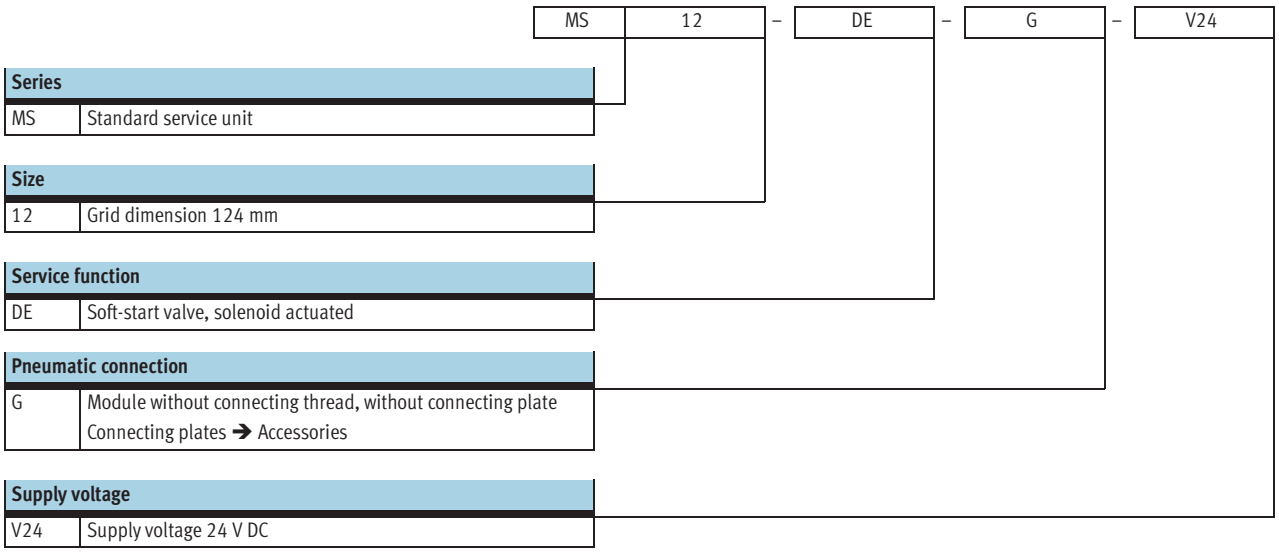

Further variants can be ordered using the modular system ➔ 91

- Pneumatic connection
- Supply voltage
- Pressure gauge/pressure gauge alternatives
- Alternative pressure gauge scale
- Type of mounting
- Flow direction

Soft-start valves MS12-DE, MS series

Technical data

Function

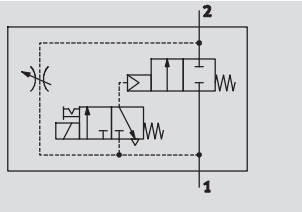

Flow rate
25,000 ... 42,000 l/min
Temperature range
–10 ... +50 °C
Pressure
3 ... 16 bar

The duration of the pressure build-up is adjusted using the restrictor attached to the valve cap.
The output pressure p2 rises slowly in accordance with the restrictor setting. Only the air flow from the restrictor is available when the solenoid valve is not actuated. The main seat is only opened by energising the solenoid valve.

When the solenoid valve is switched off, the main seat is closed and only the air flow from the flow control valve is available.
The solenoid valve should remain switched on in order to vent a system as this increases the flow rate from 2 and 1 and reduces the exhaust time.

- Solenoid actuated soft-start valve for slowly pressurising and venting pneumatic installations
- The drives advance slowly and reliably into the initial position
- Sudden and erratic movements are avoided
- With solenoid coil without plug socket
- Switch-through pressure can be exactly controlled using a solenoid valve
- Adjustable switching time delay
- Three voltage ranges can be selected
- Non-detenting and detenting manual override

General technical data		
Pneumatic connection 1, 2	G1 ... G2 (With connecting plate AG...)	– (Module without connecting thread, without connecting plate G)
Design	Piston poppet valve	
Type of mounting	Via accessories	
	In-line installation	
Assembly position	Any	
Valve function	2/2-way valve	
Exhaust function	Flow control	
Type of reset	Mechanical spring	
Switching position display	Via accessories	
	LED (with variant V24P)	
Type of actuation	Piloted	
Pilot air supply	Internal	
Direction of flow	Non-reversible	

Note: This product conforms to ISO 1179-1 and ISO 228-1

Electrical data		
Coil characteristics	V24	24 V DC
	V24P	24 V DC
	V110	110 V AC
	V230	230 V AC
Electrical connection	V24/V110/V230	Plug, square design to EN 175301-803, type A
	V24P	Plug M12, 4-pin to DESINA
Protection class for solenoid coil		IP65
Duty cycle [%]		100

Soft-start valves MS12-DE, MS series

Technical data

Standard nominal flow rate qnN[1] [l/min]	
In main flow direction 1 → 2	25,000 ... 42,000
In relief direction 2 → 1[2]	25,000 ... 42,000

1) Measured at p1 = 6 bar and p2 = 5 bar, Δp = 1 bar
2) For energised solenoid valve

Operating and environmental conditions		
Operating pressure	[bar]	3 ... 16
Operating medium		Compressed air in accordance with ISO 8573-1:2010 [–:–:–]
Ambient temperature	[°C]	–10 ... +50
Temperature of medium	[°C]	–10 ... +50
Corrosion resistance	CRC[1]	2

1) Corrosion resistance class 2 according to Festo standard 940 070
Components requiring moderate corrosion resistance. Externally visible parts with primarily decorative surface requirements which are in direct contact with a normal industrial environment or media such as coolants or lubricating agents.

Weights [g]	
Soft-start valve	3,800

Materials

Sectional view

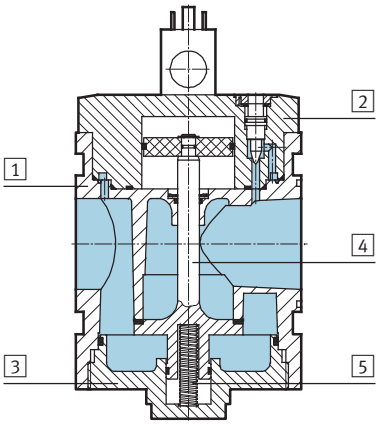

Soft-start valve		
1	Body	Die-cast aluminium
2	Cap, top	Aluminium
3	Cap, bottom	Aluminium
4	Valve stem	Aluminium, NBR
5	Springs	Steel
–	Covers/cover plates	PA
–	Seals	NBR
–	Connecting plate, module connector, mounting bracket	Die-cast aluminium
Note on materials		Free of copper and PTFE (not with variant AG)

Dimensions – Basic version

Download CAD Data ➔ **www.festo.com/us/cad**

Module without connecting thread, without connecting plate G, with cover plate

MS12-DE-G-V24/V110/V230

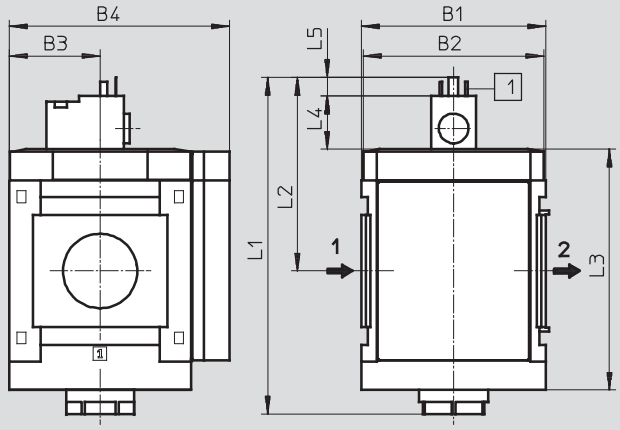

MS12-DE-G-V24P

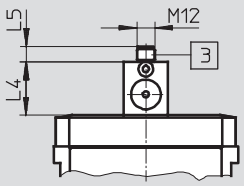

1 Plug connection to EN 175301-803

3 Plug connection M12, 4-pin to DESINA

➔ Flow direction

Type	B1	B2	B3	B4	L1	L2	L3	L4	L5
MS12-DE-G-V24/V110/V230	124	122	61	148	226	130	162	35.7	12.3
MS12-DE-G-V24P								36	10

Dimensions – Pressure gauge/pressure gauge alternatives

Download CAD Data ➔ **www.festo.com/us/cad**

Integrated MS pressure gauge AG, display unit [bar]

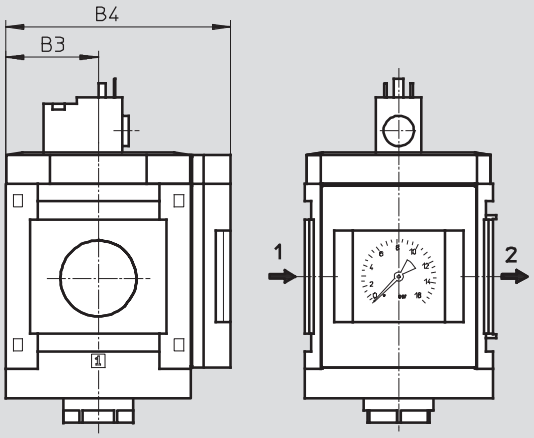

Adapter A4 for EN pressure gauge ¼, without pressure gauge

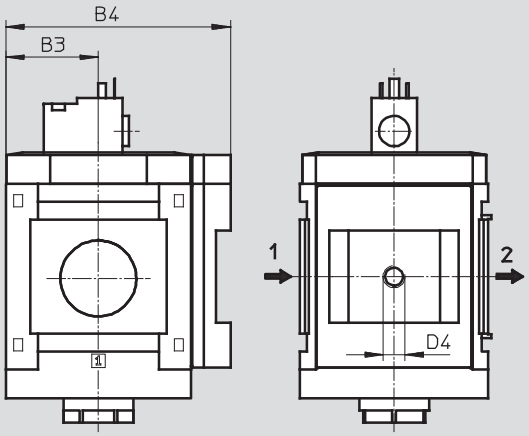

➔ Flow direction

Type	B3	B4	D4
MS12-DE-...-AG	61	148	–
MS12-DE-...-A4	61	148	G¼

Note: This product conforms to ISO 1179-1 and ISO 228-1

Ordering data

Size	Connection	Supply voltage 24 V DC	
		Part No.	Type
MS12	–	**541498**	**MS12-DE-G-V24**[1)]

1) Free of copper and PTFE

Note: This product conforms to ISO 1179-1 and ISO 228-1

Soft-start valves MS12-DE, MS series

Ordering data – Modular products

FESTO

M Mandatory data							O Options			
Module No.	Series	Size	Function	Pneumatic connection	Supply voltage	Pressure gauge/pressure gauge alternatives	Alternative pressure gauge scale	Type of mounting	Flow direction
535034	MS	12	DE	AGF, AGG, AGH, AGI, G	V24, V24P, V110, V230	AG, A4	PSI, MPA	WP	Z
Order example									
535034	MS	12	DE	AGH	V230	A4		WP	Z

Ordering table

	Grid dimension [mm]	124	Conditions	Code		Enter code
M	Module No.	535034				
	Series	Standard		MS		MS
	Size	12		12		12
	Function	Soft-start valve, electrical		-DE		-DE
	Pneumatic connection	Connecting plate G1		-AGF		
		Connecting plate G1¼		-AGG		
		Connecting plate G1½		-AGH		
		Connecting plate G2		-AGI		
		Module without connecting thread, without connecting plate		-G		
	Supply voltage	24 V DC (connection pattern to EN 175301), 16 bar		-V24		
		24 V DC plug (connection pattern M12 to DESINA), 16 bar		-V24P		
		110 V AC (connection pattern to EN 175301), 16 bar		-V110		
		230 V AC (connection pattern to EN 175301), 16 bar		-V230		
O	Pressure gauge/pressure gauge alternatives	MS pressure gauge, bar		-AG		
		Adapter plate for EN pressure gauge ¼, without pressure gauge		-A4		
	Alternative pressure gauge scale	psi	1	-PSI		
		MPa	1	-MPA		
	Type of mounting	Mounting bracket	2	-WP		
	Flow direction	Flow direction from right to left		-Z		

1 **PSI, MPA** Only with pressure gauge AG.

2 **WP** Only with connecting plate AGF, AGG, AGH or AGI.

Transfer order code

535034	MS	12	–	DE	–		–		–		–		–		–	

Ordering data – Plug socket MSSD — Technical data ➔ Internet: mssd

	Description		Electrical connection	Type of mounting cable connection	Part No.	Type
	for MS4/6-EE/DE	–	3-pin	Clamping screws	**151687**	**MSSD-EB**
			4-pin	Insulation displacement technology	**192745**	**MSSD-EB-S-M14**
		For use in the explosion protection area	3-pin	Clamping screws	**539712**	**MSSD-EB-M12**
	for MS9-EE, for MS12-EE/DE	–	3-pin	Clamping screws	**34583**	**MSSD-C**
			4-pin	Insulation displacement technology	**192748**	**MSSD-C-S-M16**

Ordering data – Plug socket with cable KMEB/KMC — Technical data ➔ Internet: kmeb, kmc

	Description	Operating voltage range	Electrical connection	Switching status display	Cable length [m]	Part No.	Type
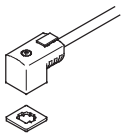	for MS4/6-EE/DE	24 V DC	2-pin	LED	2.5	**547268**	**KMEB-3-24-2,5-LED**
					5	**547269**	**KMEB-3-24-5-LED**
				–	2.5	**547270**	**KMEB-3-24-2,5**
					5	**547271**	**KMEB-3-24-5**
			3-pin	LED	2.5	**151688**	**KMEB-1-24-2,5-LED**
					5	**151689**	**KMEB-1-24-5-LED**
					10	**193457**	**KMEB-1-24-10-LED**
		230 V AC	3-pin	–	2.5	**151690**	**KMEB-1-230AC-2,5**
					5	**151691**	**KMEB-1-230AC-5**
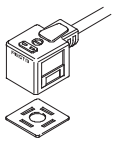	for MS9-EE, for MS12-EE/DE	24 V DC	3-pin	LED	2.5	**30931**	**KMC-1-24DC-2,5-LED**
					5	**30933**	**KMC-1-24DC-5-LED**
					10	**193459**	**KMC-1-24-10-LED**
		230 V AC	3-pin	–	2.5	**30932**	**KMC-1-230AC-2,5**
					5	**30934**	**KMC-1-230AC-5**

Ordering data – Illuminating seal MEB-LD/MC-LD — Technical data ➔ Internet: meb, mc

	Description	Operating voltage range	Part No.	Type
	for plug socket with cable KMEB and plug socket MSSD-EB	12 ... 24 V DC	**151717**	**MEB-LD-12-24DC**
		230 V DC/AC ±10%	**151718**	**MEB-LD-230AC**
	for plug socket with cable KMC and plug socket MSSD-C	12 ... 24 V DC	**19145**	**MC-LD-12-24DC**
		230 V DC/AC ±10%	**19146**	**MC-LD-230AC**

Ordering data – Locking clip CPV18-HV — Technical data ➔ Internet: cpv18-hv

	Description		Part No.	Type	PU[1]
	for MS4/6-EE/DE-...-V24	Cover for manual override, the clip prevents actuation	**530056**	**CPV18-HV**	**10**

1) Packaging unit quantity

Ordering data – Manual override AHB-MD/MF/MV — Technical data ➔ Internet: ahb

	Description		Part No.	Type
	for MS12-EE	Turn 90° to actuate and lock manual override	**157651**	**AHB-MD/MF/MV**

Ordering data – Connecting cable NEBU-M8 — Technical data ➔ Internet: nebu

	Electrical connection	Number of wires	Cable length [m]	Part No.	Type
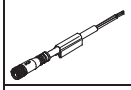	M8x1, straight socket	3	2.5	**541333**	**NEBU-M8G3-K-2.5-LE3**
			5	**541334**	**NEBU-M8G3-K-5-LE3**
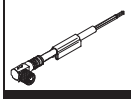	M8x1, angled socket	3	2.5	**541338**	**NEBU-M8W3-K-2.5-LE3**
			5	**541341**	**NEBU-M8W3-K-5-LE3**

Ordering data – Connecting cable NEBU-M12 — Technical data ➔ Internet: nebu

	Electrical connection	Number of wires	Cable length [m]	Part No.	Type
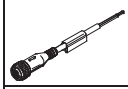	M12x1, straight socket	4	2.5	**550326**	**NEBU-M12G5-K-2.5-LE4**
			5	**541328**	**NEBU-M12G5-K-5-LE4**
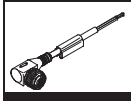	M12x1, angled socket	4	2.5	**550325**	**NEBU-M12W5-K-2.5-LE4**
			5	**541329**	**NEBU-M12W5-K-5-LE4**

Ordering data – Sensor socket SIE-GD — Technical data ➔ Internet: sie-gd

	Electrical connection	Part No.	Type
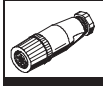	M12x1, 4-pin	**18494**	**SIE-GD**

Ordering data – Angled plug socket SIE-WD — Technical data ➔ Internet: sie-wd

	Electrical connection	Part No.	Type
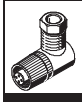	M12x1, 4-pin	**12956**	**SIE-WD-TR**

Ordering data – Silencer U — Technical data ➔ Internet: u

	Description	Pneumatic connection	Part No.	Type
	for MS4-EM1/EE	G¼	**6842**	**U-¼-B**
	for MS6-EM1/EE	G½	**6844**	**U-½-B**
	for MS9/12-EM/EE	G1	**151990**	**U-1-B**

Ordering data – Pressure gauge MA

	Nominal size	Pneumatic connection	Indicating range [bar]	Indicating range [psi]	Part No.	Type
	Pressure gauge MA, EN 837-1				Technical data ➔ Internet: ma	
	40	R¼	0 ... 16	0 ... 232	**187080**	**MA-40-16-R¼-EN**
			0 ... 25	0 ... 360	**187081**	**MA-40-25-R¼-EN**
		G¼	0 ... 16	0 ... 232	**183901**	**MA-40-16-G¼-EN**
	Pressure gauge MA, EN 837-1, with red-green range				Technical data ➔ Internet: ma	
	40	R⅛	0 ... 16	–	**525726**	**MA-40-16-R⅛-E-RG**
	50	R¼	0 ... 16	–	**525729**	**MA-50-16-R¼-E-RG**

Ordering data – Padlock LRVS-D

	Weight [g]	Part No.	Type
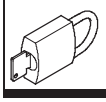	120	**193786**	**LRVS-D**

Product Range and Company Overview

A Complete Suite of Automation Services

Our experienced engineers provide complete support at every stage of your development process, including: conceptualization, analysis, engineering, design, assembly, documentation, validation, and production.

Custom Automation Components
Complete custom engineered solutions

Custom Control Cabinets
Comprehensive engineering support and on-site services

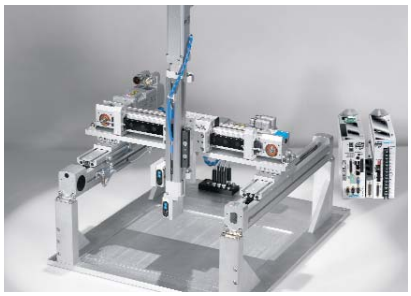

Complete Systems
Shipment, stocking and storage services

The Broadest Range of Automation Components

With a comprehensive line of more than 30,000 automation components, Festo is capable of solving the most complex automation requirements.

Electromechanical
Electromechanical actuators, motors, controllers & drives

Pneumatics
Pneumatic linear and rotary actuators, valves, and air supply

PLCs and I/O Devices
PLC's, operator interfaces, sensors and I/O devices

Supporting Advanced Automation... As No One Else Can!
Festo is a leading global manufacturer of pneumatic and electromechanical systems, components and controls for industrial automation, with more than 12,000 employees in 56 national headquarters serving more than 180 countries. For more than 80 years, Festo has continuously elevated the state of manufacturing with innovations and optimized motion control solutions that deliver higher performing, more profitable automated manufacturing and processing equipment. Our dedication to the advancement of automation extends beyond technology to the education and development of current and future automation and robotics designers with simulation tools, teaching programs, and on-site services.

Quality Assurance, ISO 9001 and ISO 14001 Certifications

Festo Corporation is committed to supply all Festo products and services that will meet or exceed our customers' requirements in product quality, delivery, customer service and satisfaction.

To meet this commitment, we strive to ensure a consistent, integrated, and systematic approach to management that will meet or exceed the requirements of the ISO 9001 standard for Quality Management and the ISO 14001 standard for Environmental Management.

© Copyright 2008, Festo Corporation. While every effort is made to ensure that all dimensions and specifications are correct, Festo cannot guarantee that publications are completely free of any error, in particular typing or printing errors. Accordingly, Festo cannot be held responsible for the same. For Liability and Warranty conditions, refer to our "Terms and Conditions of Sale", available from your local Festo office. All rights reserved. No part of this publication may be reproduced, distributed, or transmitted in any form or by any means, electronic, mechanical, photocopying or otherwise, without the prior written permission of Festo. All technical data subject to change according to technical update.

Printed on recycled paper at New Horizon Graphic, Inc., FSC certified as an environmentally friendly printing plant.

Festo North America

Festo Regional Contact Center

5300 Explorer Drive
Mississauga, Ontario L4W 5G4
Canada

USA Customers:

For ordering assistance,
Call: 1.800.99.FESTO (1.800.993.3786)
Fax: 1.800.96.FESTO (1.800.963.3786)
Email: customer.service@us.festo.com

For technical support,
Call: 1.866.GO.FESTO (1.866.463.3786)
Fax: 1.800.96.FESTO (1.800.963.3786)
Email: product.support@us.festo.com

Canadian Customers:

Call: 1.877.GO.FESTO (1.877.463.3786)
Fax: 1.877.FX.FESTO (1.877.393.3786)
Email: festo.canada@ca.festo.com

USA Headquarters

Festo Corporation
395 Moreland Road
P.O. Box 18023
Hauppauge, NY 11788, USA
www.festo.com/us

USA Sales Offices

Appleton
North 922 Tower View Drive, Suite N
Greenville, WI 54942, USA

Boston
120 Presidential Way, Suite 330
Woburn, MA 01801, USA

Chicago
1441 East Business Center Drive
Mt. Prospect, IL 60056, USA

Dallas
1825 Lakeway Drive, Suite 600
Lewisville, TX 75057, USA

Detroit – Automotive Engineering Center
2601 Cambridge Court, Suite 320
Auburn Hills, MI 48326, USA

New York
395 Moreland Road
Hauppauge, NY 11788, USA

Silicon Valley
4935 Southfront Road, Suite F
Livermore, CA 94550, USA

United States

USA Headquarters, East: Festo Corp., 395 Moreland Road, Hauppauge, NY 11788
Phone: 1.631.435.0800; Fax: 1.631.435.8026;
Email: info@festo-usa.com **www.festo.com/us**

Canada

Headquarters: Festo Inc., 5300 Explorer Drive, Mississauga, Ontario L4W 5G4
Phone: 1.905.624.9000; Fax: 1.905.624.9001;
Email: festo.canada@ca.festo.com **www.festo.ca**

Mexico

Headquarters: Festo Pneumatic, S.A., Av. Ceylán 3, Col. Tequesquinahuac,
54020 Tlalnepantla, Edo. de México
Phone: 011 52 [55] 53 21 66 00; Fax: 011 52 [55] 53 21 66 65;
Email: festo.mexico@mx.festo.com **www.festo.com/mx**

Central USA
Festo Corporation
1441 East Business
Center Drive
Mt. Prospect, IL 60056, USA
Phone: 1.847.759.2600
Fax: 1.847.768.9480

Western USA
Festo Corporation
4935 Southfront Road,
Suite F
Livermore, CA 94550, USA
Phone: 1.925.371.1099
Fax: 1.925.245.1286

Festo Worldwide

Argentina Australia Austria Belarus Belgium Brazil Bulgaria Canada Chile China Colombia Croatia Czech Republic Denmark Estonia Finland France Germany Great Britain Greece Hong Kong Hungary India Indonesia Iran Ireland Israel Italy Japan Latvia Lithuania Malaysia Mexico Netherlands New Zealand Norway Peru Philippines Poland Romania Russia Serbia Singapore Slovakia Slovenia South Africa South Korea Spain Sweden Switzerland Taiwan Thailand Turkey Ukraine United States Venezuela

www.festo.com