Flat cylinders EZH/DZF/DZH

FESTO

- Extremely flat design
- Protected against torsion thanks to special piston shape
- Compact assembly with block mounting
- Wide variety of mounting options

Flat cylinders EZH/DZF/DZH

Product range overview

Function	Design	Type	Piston ∅ [mm]	Stroke [mm]	
Single-acting	EZH				
	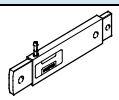	**EZH** Single-ended piston rod	1.5x6.5	10	
			2.5x9	10, 20	
			5x20	25, 50	
			10x40	40	
Double-acting	DZF				
	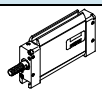	**DZF** Single-ended piston rod	12, 18, 25	10, 25, 40, 50, 80, 100, 125, 160, 200	10 … 200
			32, 40, 50, 63	10, 25, 40, 50, 80, 100, 125, 160, 200, 250, 320	10 … 320
	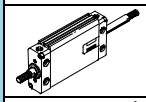	**DZF-…-S2** Through piston rod	12, 18, 25	–	10 … 200
			32, 40, 50, 63	–	10 … 320
	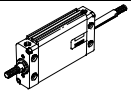	**DZF-…-S20** Through, hellow piston rod	12, 18, 25	–	10 … 200
			32, 40, 50, 63	–	10 … 320
Double-acting	DZH				
	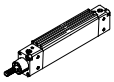	**DZH** Single-ended piston rod	16	25, 40, 50, 80, 100, 125, 160, 200	1 … 200
			20	25, 40, 50, 80, 100, 125, 160, 200, 250, 320	1 … 320
			25	25, 40, 50, 80, 100, 125, 160, 200, 250, 320, 400, 500	1 … 500
			32, 40, 50, 63	25, 40, 50, 80, 100, 125, 160, 200, 250, 300	1 … 1000
	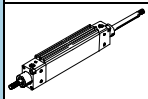	**DZH-…-S2** Through piston rod	16	–	1 … 200
			20	–	1 … 320
			25	–	1 … 500
			32, 40, 50, 63	–	1 … 1000
	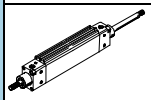	**DZH-…-S20** Through, hellow piston rod	16	–	1 … 200
			20	–	1 … 320
			25	–	1 … 500

Flat cylinders EZH/DZF/DZH

Product range overview

Type	Position sensing	Piston rod		Non-rotating	S6 Heat resistant seals up to 120 °C	➔ Page/Internet
		with female thread	with male thread			
EZH Single-ended piston rod	■ for 10x40	–	–	■	–	4
DZF Single-ended piston rod	■	■	■	■	■	8
DZF-...-S2 Through piston rod	■	■	■	■	–	8
DZF-...-S20 Through, hellow piston rod	■	–	■	■	–	8
DZH Single-ended piston rod	■	–	■	■	■	22
DZH-...-S2 Through piston rod	■	–	■	■	–	22
DZH-...-S20 Through, hellow piston rod	■	–	■	■	–	22

Flat cylinders EZH

Peripherals overview and type codes

Piston area 1.5x6.5/2.5x9/5x20 mm	Piston area 10x40 mm

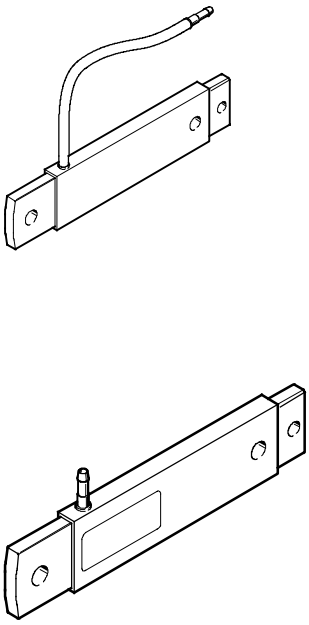

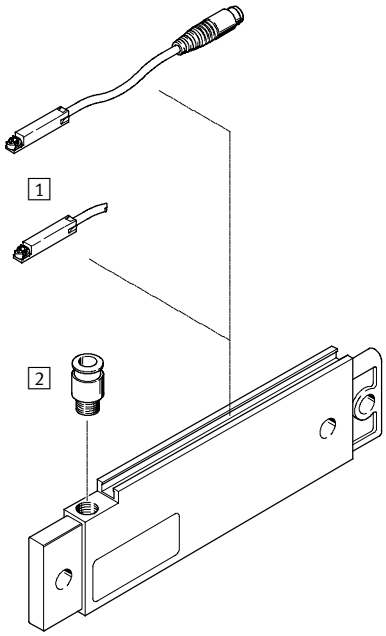

Accessories		
	Brief description	➔ Page/Internet
1 Proximity sensor SME/SMT-8	Can be integrated in the cylinder profile barrel	37
2 Push-in fitting QSM-G1/8-...-I, QS-G1/8-...-I	For connecting compressed air tubing with standard external diameters	quick star

EZH	–	2.5x9	–	20	–		–	B

Type	
Single-acting	
EZH	Flat cylinder

Piston area [mm]

Stroke [mm]

Position sensing	
	No position sensing
A	For proximity sensing

Generation	
	Series A
B	Series B

Flat cylinders EZH

Technical data

Function

EZH-...

Without end-position sensing

EZH-...-A-B

For end position sensing

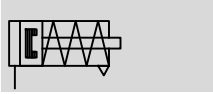

- ∅ - Diameter
  approx. 3.6 ... 22 mm
- | - Stroke length
  10 ... 50 mm

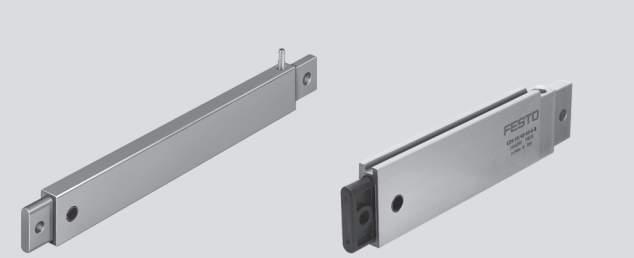

EZH-5/20-...-B EZH-10/40-40-A-B

General technical data						
Piston area Stroke length	1.5x6.5 10	2.5x9 10	2.5x9 20	5x20 25	5x20 50	10x40 40
Equivalent piston ∅	3.6	5.6	5.6	12	12	22
Pneumatic connection	Barbed fitting PK-3 for 3 mm plastic tubing					G⅛
Operating medium	Compressed air in accordance with ISO 8573-1:2010 [7:4:4]					
Note on operating/pilot medium	Operation with lubricated medium possible (in which case lubricated operation will always be required)					
Constructional design	Piston Piston rod					
Cushioning	None					
Position sensing	–	–	–	–	–	For proximity sensing
Type of mounting	With transverse bore					
Mounting position	Any					

Operating conditions						
Piston area Stroke length	1.5x6.5 10	2.5x9 10	2.5x9 20	5x20 25	5x20 50	10x40 40
Operating pressure [bar]	3.0 ... 6.0	2.5 ... 6.0	2.8 ... 6.0	2.5 ... 6.0	2.5 ... 6.0	2.5 ... 6.0
Ambient temperature[1] [°C]	0 ... +60					
Corrosion resistance class CRC[2]	2					

1) Observe operating range of proximity sensors
2) Corrosion resistance class 2 according to Festo standard 940 070
Components requiring moderate corrosion resistance. Externally visible parts with primarily decorative surface requirements which are in direct contact with a surrounding industrial atmosphere or media such as cooling or lubricating agents

Forces [N]						
Piston area Stroke length	1.5x6.5 10	2.5x9 10	2.5x9 20	5x20 25	5x20 50	10x40 40
Theoretical force at 6 bar, advancing	3.8	10	10	52	49	205
Theoretical spring return force						
min.	1	3	2.8	8	10.6	18
max.	1.7	4	4.4	10.6	13.6	28

Weights [g]						
Piston area Stroke length	1.5x6.5 10	2.5x9 10	2.5x9 20	5x20 25	5x20 50	10x40 40
Product weight	4	11	17	108	145	242

Materials

Sectional view

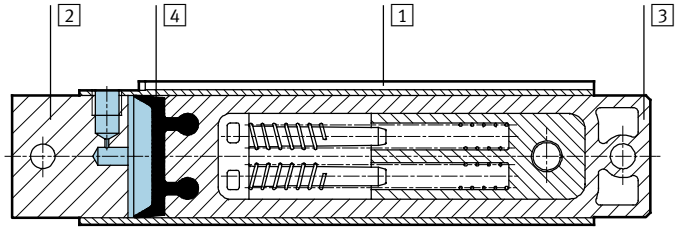

Piston area Stroke length	1.5x6.5 10	2.5x9 10	2.5x9 20	5x20 25	5x20 50	10x40 40
1 Housing	Aluminium					
2 Cover	Aluminium					
3 Rectangular piston	Polyamide, reinforced	High-alloy steel				Polyamide, reinforced
4 Seal	Polyurethane					
– Note on materials	Contains PWIS (paint-wetting impairment substances)	–				

Dimensions EZH-1,5/6,5-10

Download CAD data ➔ **www.festo.com**

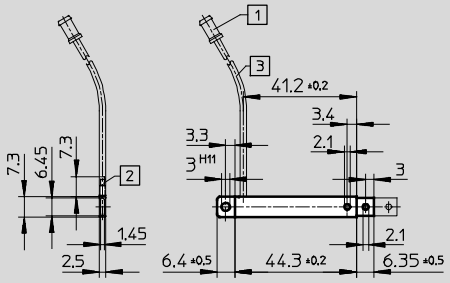

1 Barbed fittings for 3 mm plastic tubing
2 Barbed fittings for 1.5 mm plastic tubing
3 200 mm tubing length

Dimensions EZH-2,5/9-... and EZH-5/20-... Download CAD data ➔ **www.festo.com**

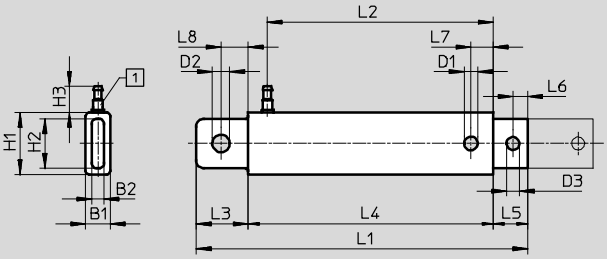

1 Barbed fittings for 3 mm plastic tubing

Type	B1	B2	D1 ∅	D2 ∅ H11	D3 ∅	H1	H2	H3
EZH-2,5/9-10	4.9	2.5	3.1	4	3.1	12	9.9	10.7
EZH-2,5/9-20	4.9	2.4	3.1	4	3.1	12	9.9	10.7
EZH-5/20-25	10	4.9	5.5	7	5.2	25	21.9	10.7
EZH-5/20-50	10	4.9	5.5	7	5.2	25	21.9	10.7

Type	L1	L2	L3	L4 +0.2	L5	L6	L7	L8
EZH-2,5/9-10	67 $_{+0.7/-0.8}$	43.6	10 $_{+0.3/-0.5}$	48.6	8.4 $_{+0.3/-0.5}$	4	4.5	5.5
EZH-2,5/9-20	99 $_{\pm 0.7}$	75.5	10 $_{+0.3/-0.5}$	80.6	8.4 $_{+0.3/-0.5}$	4	4.5	5.5
EZH-5/20-25	133.9 $_{+0.6/-0.8}$	91.3	21 $_{+0.3/-0.5}$	99	13.9 $_{+0.3/-0.5}$	6	9	11
EZH-5/20-50	205.9 $_{+0.8/-1.1}$	163.3	21 $_{+0.5/-0.7}$	171	13.9 $_{+0.3/-0.6}$	6	9	11

Dimensions EZH-10/40-40-A-B Download CAD data ➔ **www.festo.com**

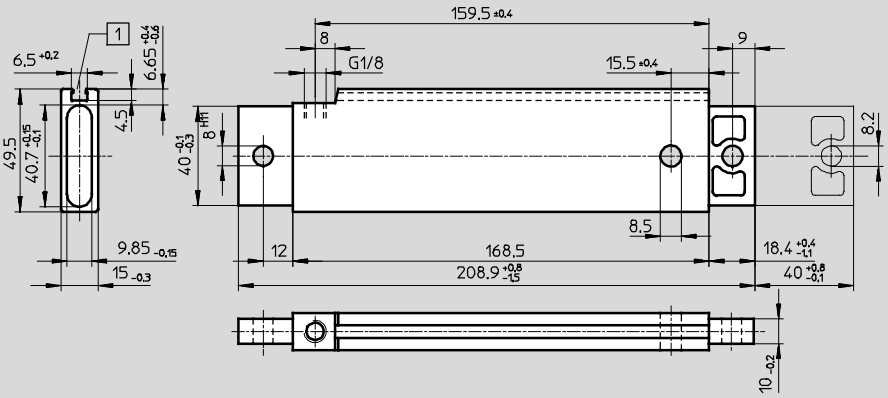

1 Mounting slot for proximity sensor SME/SMT-8

Ordering data

Type	Piston area [mm]	Stroke [mm]	Part No.	Type
Without end-position sensing				
	1.5x6.5	10	**13 009**	**EZH-1,5/6,5-10**
	2.5x9	10	**164 991**	**EZH-2,5/9-10-B**
		20	**164 992**	**EZH-2,5/9-20-B**
	5x20	25	**164 993**	**EZH-5/20-25-B**
		50	**164 994**	**EZH-5/20-50-B**
For end position sensing				
	10x40	40	**164 990**	**EZH-10/40-40-A-B**

Flat cylinders DZF

Peripherals overview

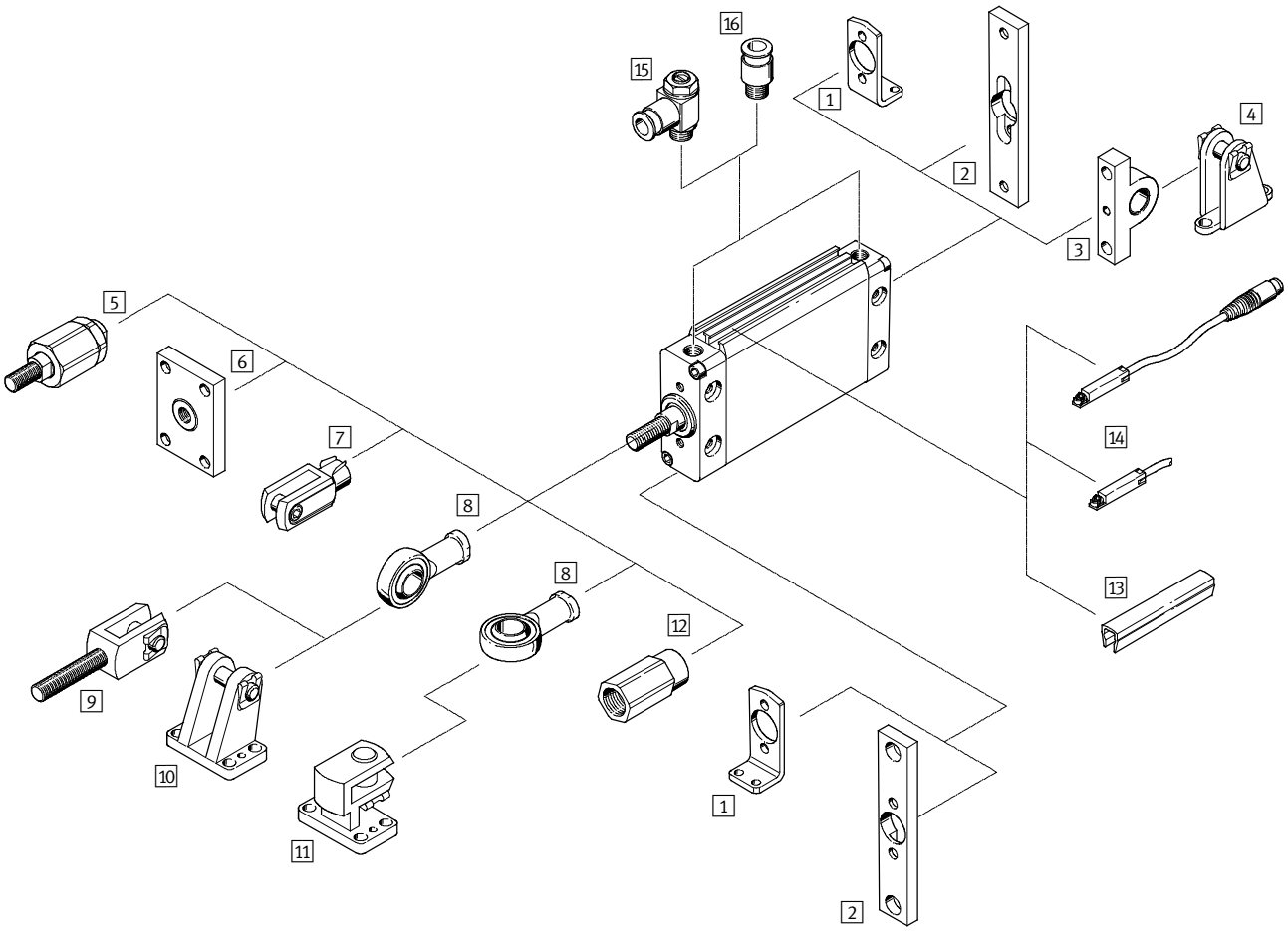

Mounting attachments and accessories				
	Brief description	Piston ∅ 16 … 40 mm	Piston ∅ 50 … 63 mm	➔ Page/Internet
1 Foot mounting HZF	for bearing and end caps	■	■	19
2 Flange mounting FZF	for bearing and end caps	■	■	19
3 Swivel flange SZF	for end caps	■	■	20
4 Clevis foot LZF	–	■	■	20
5 Self-aligning rod coupler FK	for compensating radial and angular deviations	■	■	21
6 Coupling piece KSZ	for cylinders with a non-rotating piston rod to compensate for radial deviations	■	■	21
7 Rod clevis SG	permits a swivelling movement of the cylinder in one plane	■	■	21
8 Rod eye SGS	with spherical bearing	■	■	21
9 Rod clevis SGA	with male thread	■	■	21
10 Clevis foot LBG	–	■	■	21
11 Right-angle clevis foot LQG	–	■	■	21
12 Adapter AD	for a vacuum generator	■ S20	–	21
13 Slot cover ABP-5-S	to protect the sensor cable and keep dirt out of the sensor slots	■	■	37
14 Proximity sensor SME/SMT-8	can be integrated in the cylinder profile barrel	■	■	37
15 One-way flow control valve GRLA/GRLZ	to regulate speed	■	■	38
16 Push-in fitting QS	for connecting compressed air tubing with standard external diameters	■	■	quick star

Flat cylinders DZF

Type codes

DZF	–	25	–	100	–		–	P	–	A	–	

Type	
Double-acting	
DZF	Flat cylinder

Piston ∅ [mm]

Stroke [mm]

Piston rod thread	
	Female thread
A	Male thread

Cushioning	
P	Flexible cushioning rings/plates at both ends

Position sensing	
A	For proximity sensing

Variant	
S2	Through piston rod
S6	Heat resistant seals up to 120 °C
S20	Through, hollow piston rod

Flat cylinders DZF

Technical data

Function

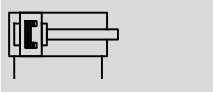

Diameter
12 ... 63 mm

Stroke length
10 ... 320 mm

www.festo.com

Variants

S2

S6

S20

General technical data								
Piston ∅		12	18	25	32	40	50	63
Pneumatic connection		M5	M5	M5	G⅛	G⅛	G¼	G¼
Piston rod thread	female	M3	M4	M5	M6	M8	M10	M10
	male	M6	M8	M10x1.25	M10x1.25	M12x1.25	M16x1.5	M16x1.5
Operating medium		Compressed air in accordance with ISO 8573-1:2010 [7:4:4]						
Note on operating/pilot medium		Operation with lubricated medium possible (in which case lubricated operation will always be required)						
Constructional design		Piston						
		Piston rod						
Cushioning		Flexible cushioning rings/plates at both ends						
Position sensing		For proximity sensing						
Type of mounting		Via through holes						
		With female thread						
		With accessories						
Mounting position		Any						

Operating pressure [bar]							
Piston ∅	12	18	25	32	40	50	63
	1.6 ... 10	1 ... 10					

Ambient conditions		
Variant	Basic version	S6
Ambient temperature[1] [°C]	0 ... +80	0 ... +120
Corrosion resistance class CRC[2]	2	2

1) Observe operating range of proximity sensors
2) Corrosion resistance class 2 according to Festo standard 940 070
Components requiring moderate corrosion resistance. Externally visible parts with primarily decorative surface requirements which are in direct contact with a surrounding industrial atmosphere or media such as cooling or lubricating agents

Forces [N] and impact energy [J]								
Piston ∅		12	18	25	32	40	50	63
Theoretical force at 6 bar, advancing		68	162	295	483	754	1,178	1,870
	S2/S20	51	122	247	415	633	990	1,682
Theoretical force at 6 bar, retracting		51	122	247	415	633	990	1,682
	S2/S20	51	122	247	415	633	990	1,682
Max. impact energy at end positions		0.09	0.10	0.10	0.40	0.52	0.64	0.70

Torque [Nm] and torsional backlash [°]							
Piston ∅	12	18	25	32	40	50	63
Max. torque at the piston rod[1)]	0.1	0.2	0.5	0.8	1.0	1.2	1.5
Max. torsional backlash of the piston rod	±2.5	±1.2	±1.0	±0.8	±0.6	±0.5	±0.4

1) The max. torque must also be observed when fitting mounting attachments to the piston rod

Weights [g]							
Piston ∅	12	18	25	32	40	50	63
Product weight at 0 mm stroke	96	107	168	272	480	855	1,380
Additional weight per 10 mm stroke	9	13	18	24	40	64	91

Safety clearances for reliable switching function

Cylinder – Ferritic components

If the cylinder is mounted on a ferritic component, piston position sensing is possible using proximity sensors SMT-8.

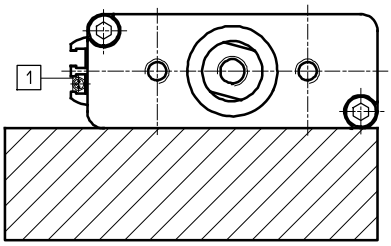

1 SMT-8...

If a proximity sensor SME-8 is used, then with piston ∅ 12 to 32 mm, a minimum clearance to the ferritic component of 10 mm must be maintained.

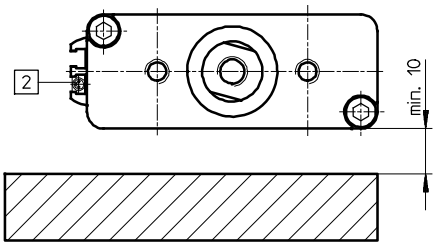

2 SME-8...

Cylinder – Cylinder

Safety clearance X must be maintained when connecting cylinders together in series, as the stray fields of the switching magnets can result in incorrect switching.

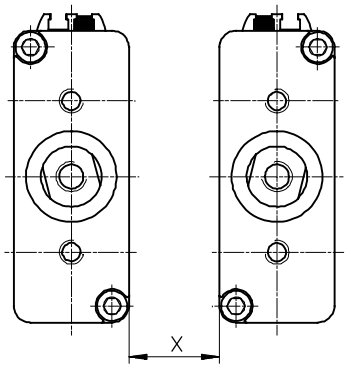

Piston ∅		12	18	25	32	40	50	63
Min. safety clearance X [mm]	SMT-8...	35			25	45		80
	SME-8...	50			45	65		50

Flat cylinders DZF

Technical data

FESTO

Materials

Sectional view

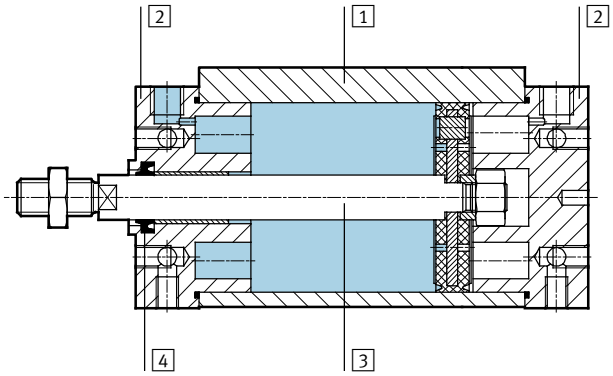

Flat cylinder		Basic version	S6
1 Cylinder barrel		Wrought aluminium alloy, anodised	Wrought aluminium alloy, anodised
2 Bearing end cap		Wrought aluminium alloy	Wrought aluminium alloy
3 Piston rod	∅ 12 ... 25	High-alloy stainless steel	High-alloy stainless steel
	∅ 32 ... 63	High-alloy steel	High-alloy steel
4 Dynamic seals		Polyurethane	Fluorocarbon rubber

Dimensions – Basic version

Download CAD data ➔ **www.festo.com**

∅ 12, 18

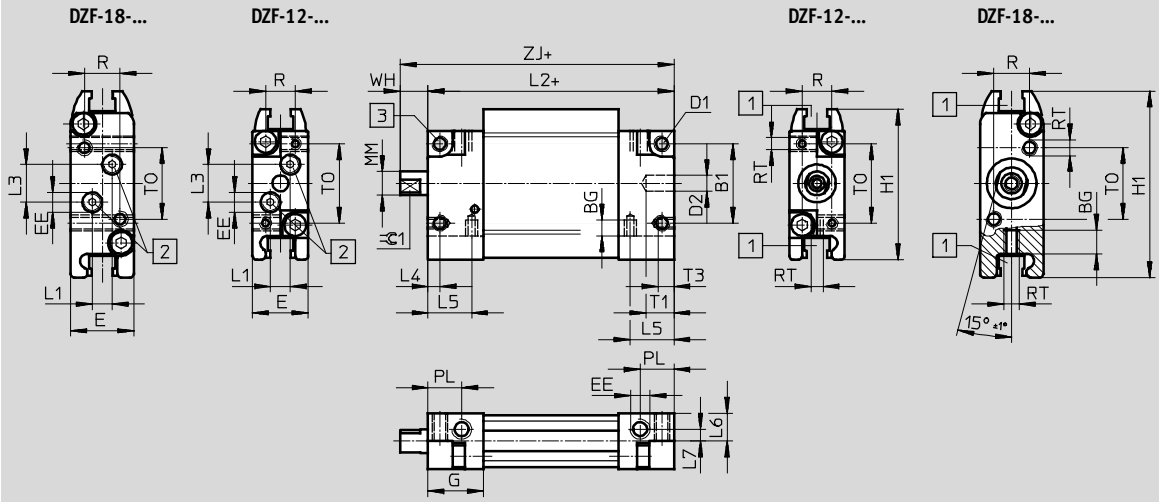

1 Mounting slot for proximity sensors

2 Additional air connections, sealed with blanking plugs

3 Max. tightening torque

\+ = plus stroke length

∅ [mm]	B1	BG	D1	D2 ∅ H9	E	EE	G	H1	L1	L2	L3	L4	L5
12	20	4	M4	4	14	M5	14	38	5	62	9.5	3	11
18	20	6	M4	4	16	M5	14	47	5	62	9.5	3.5	5

∅ [mm]	L6	L7	MM ∅	PL	R	RT	T1	T3	TO	WH	ZJ	⌯1 h13	Max. tightening torque [Nm] +10%
12	7	3	6	8.5	7.5	M3	7	4	20	7	69	5	2.9
18	–	–	8	8.5	9	M4	7	6	18	7	69	7	2.9

Dimensions – Basic version Download CAD data ➔ **www.festo.com**

Piston ∅ 25 ... 63

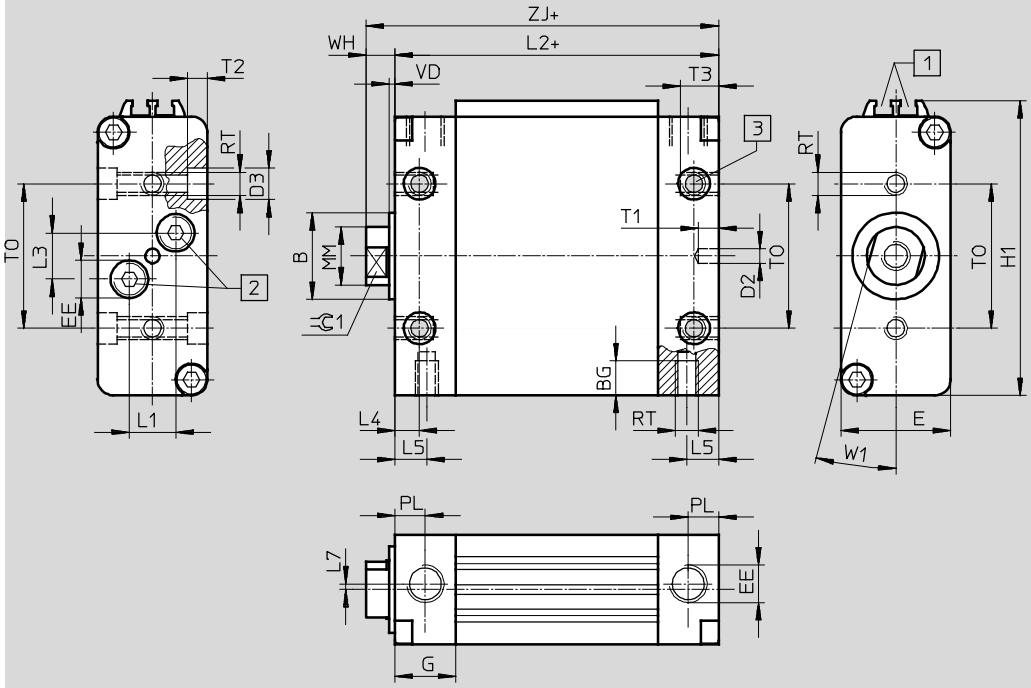

1 Mounting slot for proximity sensors

2 Additional air connections, sealed with blanking plugs

3 Max. tightening torque

+ = plus stroke length

∅ [mm]	B ∅ h9	BG	D2 ∅ H9	D3 ∅	E	EE	G	H1	L1	L2	L3	L4	L5
25	16	8	4	8	20	M5	12	56	6	62	10	5	5
32	20	9	4	10	24	G⅛	17	65	7.5	72	14.5	8.5	8.5
40	25	9	4	10	30	G⅛	17	82	7.5	76	14.5	8.5	8.5
50	30	12	5	11	38	G¼	21	102	16	82	16	8.5	8.5
63	30	14	5	15	50	G¼	21	126.5	21	82	19	8.5	8.5

∅ [mm]	L7	MM ∅	PL	RT	T1	T2	T3	TO	VD	W1 ±1	WH	ZJ	⌯1 h13	Max. tightening torque [Nm] +10%
25	–	10	6	M5	7	4	8	25	2	15°	8	70	9	4
32	1.5	12	8.5	M6	7	4	9	32	2	15°	8	80	10	9.9
40	–	16	8.5	M6	7	5	9	40	2	15°	9	85	13	9.9
50	–	20	10.5	M8	7	6	12	50	2	15°	10	92	17	20
63	–	20	10.5	M10	7	6	14	60	2	15°	10	92	17	35

Dimensions – Variants Download CAD data ➔ **www.festo.com**

Basic version with female thread

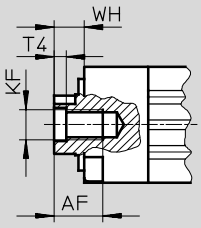

Basic version with male thread

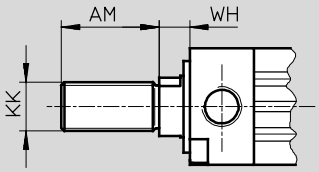

S2 – Through piston rod with female thread

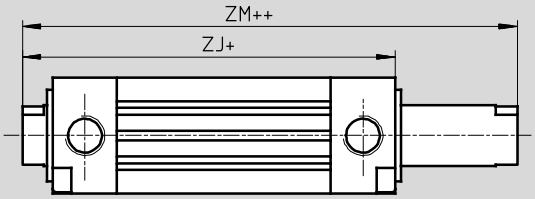

\+ = plus stroke length
++ = plus 2x stroke length

S2 – Through piston rod with male thread

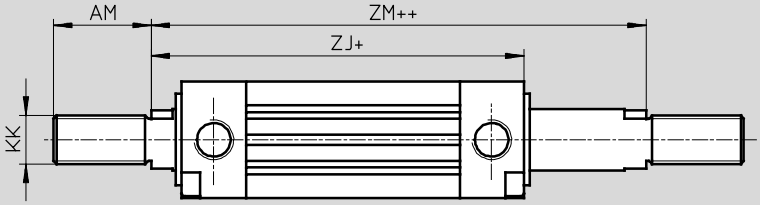

\+ = plus stroke length
++ = plus 2x stroke length

S20 – Through, hollow piston rod

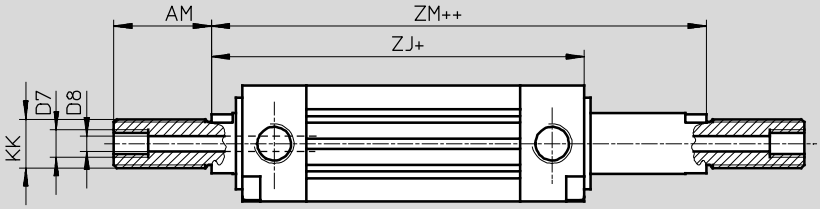

\+ = plus stroke length
++ = plus 2x stroke length

∅ [mm]	AF	AM	D7	D8 ∅	KF	KK	T4	WH	ZJ	ZM
12	8	16	–	1.8	M3	M6	1.5	7	69	76
18	10	20	–	2.8	M4	M8	1.5	7	69	76
25	12	22	–	3.8	M5	M10x1.25	2	8	70	78
32	14	22	–	4.5	M6	M10x1.25	2.6	8	80	88
40	16	24	–	6	M8	M12x1.25	3.3	9	85	94
50	20	32	G⅛	8	M10	M16x1.5	4.7	10	92	102
63	20	32	G⅛	8	M10	M16x1.5	4.7	10	92	102

Ordering data – Basic version						
Type	Piston ∅ [mm]	Stroke [mm]	Piston rod with female thread			Piston rod with male thread	
			Part No.	Type		Part No.	Type
	12	10	**164 003**	**DZF-12-10-P-A**		**161 224**	**DZF-12-10-A-P-A**
		25	**164 004**	**DZF-12-25-P-A**		**161 225**	**DZF-12-25-A-P-A**
		40	**164 005**	**DZF-12-40-P-A**		**161 226**	**DZF-12-40-A-P-A**
		50	**164 006**	**DZF-12-50-P-A**		**161 227**	**DZF-12-50-A-P-A**
		80	**164 007**	**DZF-12-80-P-A**		**161 228**	**DZF-12-80-A-P-A**
		100	**164 008**	**DZF-12-100-P-A**		**161 229**	**DZF-12-100-A-P-A**
		125	**164 009**	**DZF-12-125-P-A**		**161 230**	**DZF-12-125-A-P-A**
		160	**164 010**	**DZF-12-160-P-A**		**161 231**	**DZF-12-160-A-P-A**
		200	**164 011**	**DZF-12-200-P-A**		**161 232**	**DZF-12-200-A-P-A**
	18	10	**164 015**	**DZF-18-10-P-A**		**161 237**	**DZF-18-10-A-P-A**
		25	**164 016**	**DZF-18-25-P-A**		**161 238**	**DZF-18-25-A-P-A**
		40	**164 017**	**DZF-18-40-P-A**		**161 239**	**DZF-18-40-A-P-A**
		50	**164 018**	**DZF-18-50-P-A**		**161 240**	**DZF-18-50-A-P-A**
		80	**164 019**	**DZF-18-80-P-A**		**161 241**	**DZF-18-80-A-P-A**
		100	**164 020**	**DZF-18-100-P-A**		**161 242**	**DZF-18-100-A-P-A**
		125	**164 021**	**DZF-18-125-P-A**		**161 243**	**DZF-18-125-A-P-A**
		160	**164 022**	**DZF-18-160-P-A**		**161 244**	**DZF-18-160-A-P-A**
		200	**164 023**	**DZF-18-200-P-A**		**161 245**	**DZF-18-200-A-P-A**
	25	10	**164 027**	**DZF-25-10-P-A**		**161 250**	**DZF-25-10-A-P-A**[1]
		25	**164 028**	**DZF-25-25-P-A**		**161 251**	**DZF-25-25-A-P-A**[1]
		40	**164 029**	**DZF-25-40-P-A**		**161 252**	**DZF-25-40-A-P-A**[1]
		50	**164 030**	**DZF-25-50-P-A**		**161 253**	**DZF-25-50-A-P-A**[1]
		80	**164 031**	**DZF-25-80-P-A**		**161 254**	**DZF-25-80-A-P-A**[1]
		100	**164 032**	**DZF-25-100-P-A**		**161 255**	**DZF-25-100-A-P-A**[1]
		125	**164 033**	**DZF-25-125-P-A**		**161 256**	**DZF-25-125-A-P-A**[1]
		160	**164 034**	**DZF-25-160-P-A**		**161 257**	**DZF-25-160-A-P-A**[1]
		200	**164 035**	**DZF-25-200-P-A**		**161 258**	**DZF-25-200-A-P-A**[1]
	32	10	**164 039**	**DZF-32-10-P-A**		**161 263**	**DZF-32-10-A-P-A**[1]
		25	**164 040**	**DZF-32-25-P-A**		**161 264**	**DZF-32-25-A-P-A**[1]
		40	**164 041**	**DZF-32-40-P-A**		**161 265**	**DZF-32-40-A-P-A**[1]
		50	**164 042**	**DZF-32-50-P-A**		**161 266**	**DZF-32-50-A-P-A**[1]
		80	**164 043**	**DZF-32-80-P-A**		**161 267**	**DZF-32-80-A-P-A**[1]
		100	**164 044**	**DZF-32-100-P-A**		**161 268**	**DZF-32-100-A-P-A**[1]
		125	**164 045**	**DZF-32-125-P-A**		**161 269**	**DZF-32-125-A-P-A**[1]
		160	**164 046**	**DZF-32-160-P-A**		**161 270**	**DZF-32-160-A-P-A**[1]
		200	**164 047**	**DZF-32-200-P-A**		**161 271**	**DZF-32-200-A-P-A**[1]
		250	**164 048**	**DZF-32-250-P-A**		**161 272**	**DZF-32-250-A-P-A**[1]
		320	**164 049**	**DZF-32-320-P-A**		**161 273**	**DZF-32-320-A-P-A**[1]

1) The scope of delivery includes a hexagonal nut for the piston rod thread

Ordering data – Basic version						
Type	Piston ∅ [mm]	Stroke [mm]	Piston rod with female thread		Piston rod with male thread	
			Part No.	Type	Part No.	Type
	40	10	**164 053**	**DZF-40-10-P-A**	**161 278**	**DZF-40-10-A-P-A[1)]**
		25	**164 054**	**DZF-40-25-P-A**	**161 279**	**DZF-40-25-A-P-A[1)]**
		40	**164 055**	**DZF-40-40-P-A**	**161 280**	**DZF-40-40-A-P-A[1)]**
		50	**164 056**	**DZF-40-50-P-A**	**161 281**	**DZF-40-50-A-P-A[1)]**
		80	**164 057**	**DZF-40-80-P-A**	**161 282**	**DZF-40-80-A-P-A[1)]**
		100	**164 058**	**DZF-40-100-P-A**	**161 283**	**DZF-40-100-A-P-A[1)]**
		125	**164 059**	**DZF-40-125-P-A**	**161 284**	**DZF-40-125-A-P-A[1)]**
		160	**164 060**	**DZF-40-160-P-A**	**161 285**	**DZF-40-160-A-P-A[1)]**
		200	**164 061**	**DZF-40-200-P-A**	**161 286**	**DZF-40-200-A-P-A[1)]**
		250	**164 062**	**DZF-40-250-P-A**	**161 287**	**DZF-40-250-A-P-A[1)]**
		320	**164 063**	**DZF-40-320-P-A**	**161 288**	**DZF-40-320-A-P-A[1)]**
	50	10	**164 067**	**DZF-50-10-P-A**	**161 293**	**DZF-50-10-A-P-A[1)]**
		25	**164 068**	**DZF-50-25-P-A**	**161 294**	**DZF-50-25-A-P-A[1)]**
		40	**164 069**	**DZF-50-40-P-A**	**161 295**	**DZF-50-40-A-P-A[1)]**
		50	**164 070**	**DZF-50-50-P-A**	**161 296**	**DZF-50-50-A-P-A[1)]**
		80	**164 071**	**DZF-50-80-P-A**	**161 297**	**DZF-50-80-A-P-A[1)]**
		100	**164 072**	**DZF-50-100-P-A**	**161 298**	**DZF-50-100-A-P-A[1)]**
		125	**164 073**	**DZF-50-125-P-A**	**161 299**	**DZF-50-125-A-P-A[1)]**
		160	**164 074**	**DZF-50-160-P-A**	**161 300**	**DZF-50-160-A-P-A[1)]**
		200	**164 075**	**DZF-50-200-P-A**	**161 301**	**DZF-50-200-A-P-A[1)]**
		250	**164 076**	**DZF-50-250-P-A**	**161 302**	**DZF-50-250-A-P-A[1)]**
		320	**164 077**	**DZF-50-320-P-A**	**161 303**	**DZF-50-320-A-P-A[1)]**
	63	10	**164 081**	**DZF-63-10-P-A**	**161 308**	**DZF-63-10-A-P-A[1)]**
		25	**164 082**	**DZF-63-25-P-A**	**161 309**	**DZF-63-25-A-P-A[1)]**
		40	**164 083**	**DZF-63-40-P-A**	**161 310**	**DZF-63-40-A-P-A[1)]**
		50	**164 084**	**DZF-63-50-P-A**	**161 311**	**DZF-63-50-A-P-A[1)]**
		80	**164 085**	**DZF-63-80-P-A**	**161 312**	**DZF-63-80-A-P-A[1)]**
		100	**164 086**	**DZF-63-100-P-A**	**161 313**	**DZF-63-100-A-P-A[1)]**
		125	**164 087**	**DZF-63-125-P-A**	**161 314**	**DZF-63-125-A-P-A[1)]**
		160	**164 088**	**DZF-63-160-P-A**	**161 315**	**DZF-63-160-A-P-A[1)]**
		200	**164 089**	**DZF-63-200-P-A**	**161 316**	**DZF-63-200-A-P-A[1)]**
		250	**164 090**	**DZF-63-250-P-A**	**161 317**	**DZF-63-250-A-P-A[1)]**
		320	**164 091**	**DZF-63-320-P-A**	**161 318**	**DZF-63-320-A-P-A[1)]**

1) The scope of delivery includes a hexagonal nut for the piston rod thread

Ordering data – Variants						
Type	Piston ∅ [mm]	Stroke [mm]	Piston rod with female thread		Piston rod with male thread	
			Part No.	Type	Part No.	Type
Variable stroke						
	12	10 … 200	**164 000**	**DZF-12-…-P-A**	**161 220**	**DZF-12-…-A-P-A**
	18	10 … 200	**164 012**	**DZF-18-…-P-A**	**161 233**	**DZF-18-…-A-P-A**
	25	10 … 200	**164 024**	**DZF-25-…-P-A**	**161 246**	**DZF-25-…-A-P-A**[1)]
	32	10 … 320	**164 036**	**DZF-32-…-P-A**	**161 259**	**DZF-32-…-A-P-A**[1)]
	40	10 … 320	**164 050**	**DZF-40-…-P-A**	**161 274**	**DZF-40-…-A-P-A**[1)]
	50	10 … 320	**164 064**	**DZF-50-…-P-A**	**161 289**	**DZF-50-…-A-P-A**[1)]
	63	10 … 320	**164 078**	**DZF-63-…-P-A**	**161 304**	**DZF-63-…-A-P-A**[1)]
S2 – Through piston rod						
	12	10 … 200	**164 001**	**DZF-12-…-P-A-S2**	**161 221**	**DZF-12-…-A-P-A-S2**
	18	10 … 200	**164 013**	**DZF-18-…-P-A-S2**	**161 234**	**DZF-18-…-A-P-A-S2**
	25	10 … 200	**164 025**	**DZF-25-…-P-A-S2**	**161 247**	**DZF-25-…-A-P-A-S2**[1)]
	32	10 … 320	**164 037**	**DZF-32-…-P-A-S2**	**161 260**	**DZF-32-…-A-P-A-S2**[1)]
	40	10 … 320	**164 051**	**DZF-40-…-P-A-S2**	**161 275**	**DZF-40-…-A-P-A-S2**[1)]
	50	10 … 320	**164 065**	**DZF-50-…-P-A-S2**	**161 290**	**DZF-50-…-A-P-A-S2**[1)]
	63	10 … 320	**164 079**	**DZF-63-…-P-A-S2**	**161 305**	**DZF-63-…-A-P-A-S2**[1)]
S6 – Heat resistant seals up to 120 °C						
	12	10 … 200	**164 002**	**DZF-12-…-P-A-S6**	**161 223**	**DZF-12-…-A-P-A-S6**
	18	10 … 200	**164 014**	**DZF-18-…-P-A-S6**	**161 236**	**DZF-18-…-A-P-A-S6**
	25	10 … 200	**164 026**	**DZF-25-…-P-A-S6**	**161 249**	**DZF-25-…-A-P-A-S6**[1)]
	32	10 … 320	**164 038**	**DZF-32-…-P-A-S6**	**161 262**	**DZF-32-…-A-P-A-S6**[1)]
	40	10 … 320	**164 052**	**DZF-40-…-P-A-S6**	**161 277**	**DZF-40-…-A-P-A-S6**[1)]
	50	10 … 320	**164 066**	**DZF-50-…-P-A-S6**	**161 292**	**DZF-50-…-A-P-A-S6**[1)]
	63	10 … 320	**164 080**	**DZF-63-…-P-A-S6**	**161 307**	**DZF-63-…-A-P-A-S6**[1)]
S20 – Through, hollow piston rod						
	12	10 … 200	–	–	**161 222**	**DZF-12-…-A-P-A-S20**
	18	10 … 200			**161 235**	**DZF-18-…-A-P-A-S20**
	25	10 … 200			**161 248**	**DZF-25-…-A-P-A-S20**[1)]
	32	10 … 320			**161 261**	**DZF-32-…-A-P-A-S20**[1)]
	40	10 … 320			**161 276**	**DZF-40-…-A-P-A-S20**[1)]
	50	10 … 320			**161 291**	**DZF-50-…-A-P-A-S20**[1)]
	63	10 … 320			**161 306**	**DZF-63-…-A-P-A-S20**[1)]

1) The scope of delivery includes a hexagonal nut for the piston rod thread

Foot mounting HZF

Material:
Steel

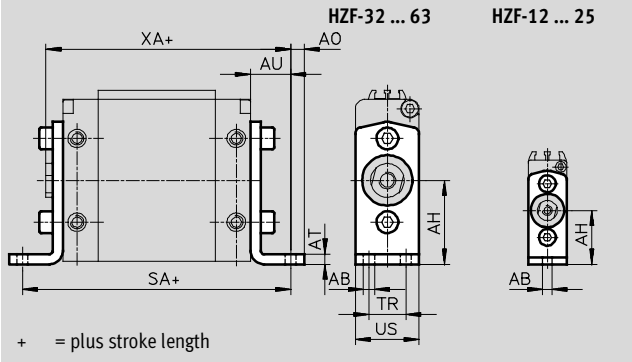

Dimensions and ordering data												
For ∅	AB ∅	AH	AO	AT	AU	SA	TR	US	XA	Weight [g]	Part No.	Type
12	4.5	25	5	2	13	88	–	14	82	8	**161 804**	**HZF-12**
18	5.5	29	5	2	17	96	–	16	86	10	**161 805**	**HZF-18**
25	5.5	28	7	3	16	94	–	20	86	21	**161 806**	**HZF-25**
32	5.5	32	5.5	3	18	108	13	24	98	27	**161 807**	**HZF-32**
40	5.5	40	7	4	20	116	16	30	105	57	**161 808**	**HZF-40**
50	6.6	50	8	4	24	130	22	38	116	97	**161 809**	**HZF-50**
63	9	63	10	4	27	136	30	50	119	167	**161 810**	**HZF-63**

Flange mounting FZF

Material:
Wrought aluminium alloy

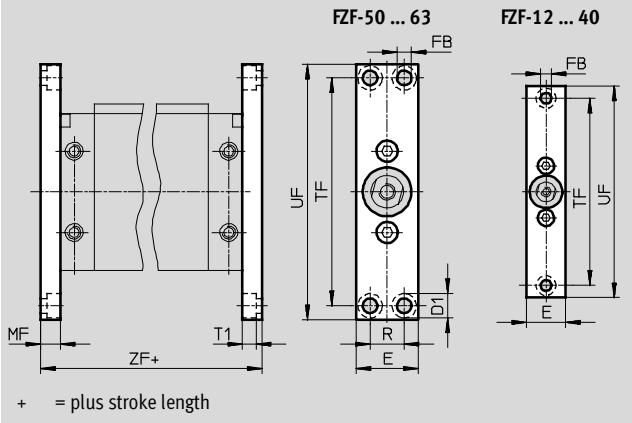

Dimensions and ordering data												
For ∅	D1 ∅	E	FB ∅	MF	R	T1	TF	UF	ZF	Weight [g]	Part No.	Type
12	8	14	4.5	8	–	4.5	75	90	78	20	**161 811**	**FZF-12**
18	8	16	4.5	8	–	4.5	80	94	78	24	**161 812**	**FZF-18**
25	10	20	5.5	10	–	5.7	100	112	82	50	**161 813**	**FZF-25**
32	11	24	6.6	10	–	6.5	115	130	92	68	**161 814**	**FZF-32**
40	11	30	6.6	10	–	6.3	132	146	96	98	**161 815**	**FZF-40**
50	15	38	9	12	21	8.3	140	157	106	147	**161 816**	**FZF-50**
63	15	50	9	15	33	8.3	140	157	112	259	**161 817**	**FZF-63**

Swivel flange SZF

Material:
High-alloy steel

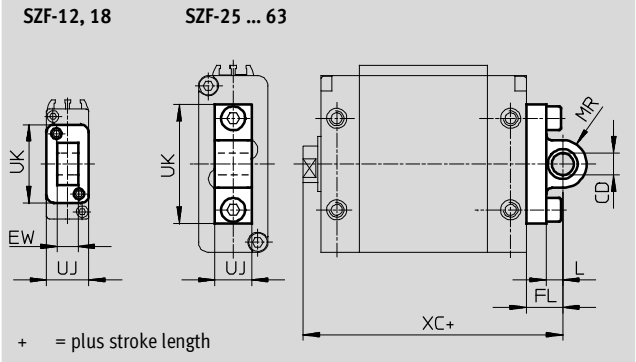

Dimensions and ordering data											
For ∅	CD ∅ H9	EW h12	FL	L	MR	UJ	UK	XC	CRC[1]	Part No.	Type
12	8	7	16	13	7	14	26	85	2	**161 818**	**SZF-12**
18	8	7	18	15	7	16	26	87	2	**161 819**	**SZF-18**
25	8	–	14	8	7.5	9	37	84	2	**161 820**	**SZF-25**
32	10	–	15	6	10	10.5	44	95	2	**161 821**	**SZF-32**
40	12	–	18	9	13	10.5	52	103	2	**161 822**	**SZF-40**
50	12	–	20	9	13	20	65	112	2	**161 823**	**SZF-50**
63	16	–	24	13	17	25	78	116	2	**161 824**	**SZF-63**

1) Corrosion resistance class 2 according to Festo standard 940 070
Components requiring moderate corrosion resistance. Externally visible parts with primarily decorative surface requirements which are in direct contact with a surrounding industrial atmosphere or media such as cooling or lubricating agents.

Clevis foot LZF

Material:
Steel

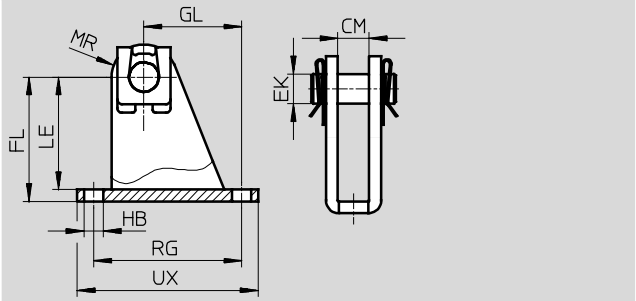

Dimensions and ordering data											
For ∅	CM	EK ∅ H8	FL	GL	HB ∅	LE	MR	RG	UX	Part No.	Type
12	$7.1_{+0.4}$	8	$32_{+0.4/-0.2}$	18	4.5	29	8	30	37	**163 962**	**LZF-12/18**
18	$7.1_{+0.4}$	8	$32_{+0.4/-0.2}$	18	4.5	29	8	30	37	**163 962**	**LZF-12/18**
25	$9.1_{+0.4}$	8	$35_{+0.4/-0.2}$	25.5	5.5	32	9.5	40	49	**163 963**	**LZF-25**
32	$10.6_{+0.4}$	10	$42_{+0.4/-0.2}$	33	6.6	38	11	50	60	**163 964**	**LZF-32**
40	$10.6_{+0.4}$	12	$51_{+0.4/-0.2}$	29.5	6.6	47	14	50	60	**163 965**	**LZF-40**
50	$20.1_{+0.5}$	12	$55_{+0.6/-0.2}$	24	9	50	14	30	46	**163 966**	**LZF-50**
63	$25.1_{+0.5}$	16	$68_{+0.6/-0.2}$	32	11	63	18	40	60	**163 967**	**LZF-63**

Ordering data – Mounting attachments Technical data ➔ Internet: clevis foot

Designation	For ∅	Part No.	Type
Clevis foot LBG			
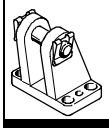	32	**31 761**	**LBG-32**
	40	**31 762**	**LBG-40**
	50	**31 763**	**LBG-50**
	63	**31 764**	**LBG-63**

Designation	For ∅	Part No.	Type
Right-angle clevis foot LQG			
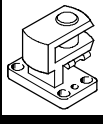	32	**31 768**	**LQG-32**
	40	**31 769**	**LQG-40**
	50	**31 770**	**LQG-50**
	63	**31 771**	**LQG-63**

Ordering data – Piston rod attachments Technical data ➔ Internet: piston-rod attachment

Designation	For ∅	Part No.	Type
Rod eye SGS			
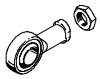	12	**9 254**	**SGS-M6**
	18	**9 255**	**SGS-M8**
	25	**9 261**	**SGS-M10x1,25**
	32		
	40	**9 262**	**SGS-M12x1,25**
	50	**9 263**	**SGS-M16x1,5**
	63		
Rod clevis SG			
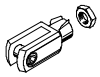	12	**3 110**	**SG-M6**
	18	**3 111**	**SG-M8**
	25	**6 144**	**SG-M10x1,25**
	32		
	40	**6 145**	**SG-M12x1,25**
	50	**6 146**	**SG-M16x1,5**
	63		
Coupling piece KSZ			
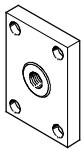	12	**36 123**	**KSZ-M6**
	18	**36 124**	**KSZ-M8**
	25	**36 125**	**KSZ-M10x1,25**
	32		
	40	**36 126**	**KSZ-M12x1,25**
	50	**36 127**	**KSZ-M16x1,5**
	63		

Designation	For ∅	Part No.	Type
Rod clevis SGA			
	12	**–**	**–**
	18	**–**	**–**
	25	**32 954**	**SGA-M10x1,25**
	32		
	40	**10 767**	**SGA-M12x1,25**
	50	**10 768**	**SGA-M16x1,5**
	63		
Self-aligning rod coupler FK			
	12	**2 061**	**FK-M6**
	18	**2 062**	**FK-M8**
	25	**6 140**	**FK-M10x1,25**
	32		
	40	**6 141**	**FK-M12x1,25**
	50	**6 142**	**FK-M16x1,5**
	63		
Adapter AD			
	12	**157 328**	**AD-M6-M5**
		157 329	**AD-M6-⅛**
		157 330	**AD-M6-¼**
	18	**157 331**	**AD-M8-⅛**
		157 332	**AD-M8-¼**
	25	**157 333**	**AD-M10x1,25-⅛**
	32	**157 334**	**AD-M10x1,25-¼**
	40	**160 256**	**AD-M12x1,25-¼**
		160 257	**AD-M12x1,25-⅜**

Flat cylinders DZH

Peripherals overview

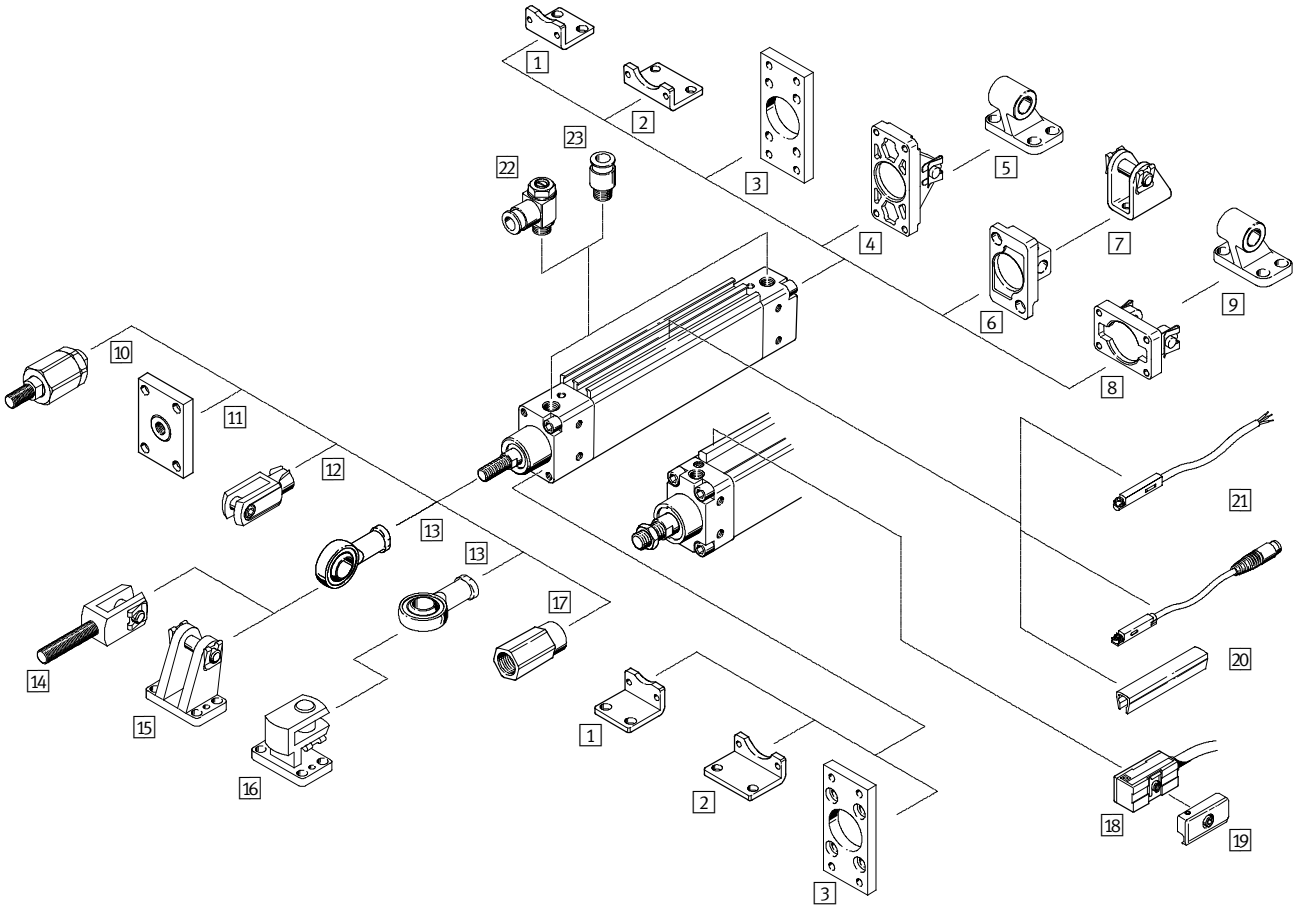

Mounting attachments and accessories					
	Brief description	Piston ∅ 16 … 20	Piston ∅ 25	Piston ∅ 32 … 63	➔ Page/Internet
1 Foot mounting, narrow HZS	for bearing and end caps	■	■	■	31
2 Foot mounting, wide HZB	for bearing and end caps	■	■	■	32
3 Flange mounting FZS	for bearing and end caps	■	■	■	31
4 Swivel flange, narrow SZS	for end caps	–	–	■	33
5 Clevis foot LBZB/LBZS	–	–	–	■	34
6 Swivel flange, narrow SZSB	for end caps	■	■	–	32
7 Clevis foot LBN	–	■	■	–	35
8 Swivel flange, wide SZB	for end caps	–	–	■	33
9 Clevis foot LN	–	–	–	■	35
10 Self-aligning rod coupler FK	for compensating radial and angular deviations	■	■	■	35
11 Coupling piece KSZ	for cylinders with a non-rotating piston rod to compensate for radial deviations	■	■	■	35
12 Rod clevis SG	permits a swivelling movement of the cylinder in one plane	■	■	■	35
13 Rod eye SGS	with spherical bearing	■	■	■	35
14 Rod clevis SGA	with male thread	■	■	■	35
15 Clevis foot LBG	–	■	■	■	35
16 Right-angle clevis foot LQG	–	■	■	■	35
17 Adapter AD	for the vacuum generator	■ S20	■ S20	–	35
18 Proximity sensors SMEO-1/SMTO-1/SMPO-1	–	–	–	■	36
19 Mounting kit SMB-1	–	–	–	■	36
20 Slot cover ABP-5-S	to protect the sensor cable and keep dirt out of the sensor slots	■	■	–	37
21 Proximity sensors SME/SMT-8	can be integrated in the cylinder profile barrel	■	■	–	37
22 One-way flow control valve GRLA/GRLZ	to regulate speed	■	■	■	38
23 Push-in fitting QS	for connecting compressed air tubing with standard external diameters	■	■	■	quick star

Flat cylinders DZH

Type codes

DZH	–	16	–	40	–	PPV	–	A	–	

Type	
Double-acting	
DZH	Flat cylinder

Piston ∅ [mm]

Stroke [mm]

Cushioning	
PPV	Pneumatic cushioning adjustable at both ends

Position sensing	
A	For proximity sensing

Variant	
S2	Through piston rod
S6	Heat resistant seals up to 120 °C
S20	Through, hollow piston rod

Flat cylinders DZH

Technical data

Function

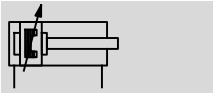

Diameter
16 … 63

Stroke length
10 … 1,000

www.festo.com

Wearing parts kits
➔ 30

Variants

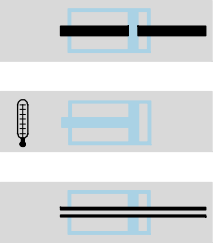

S2

S6

S20

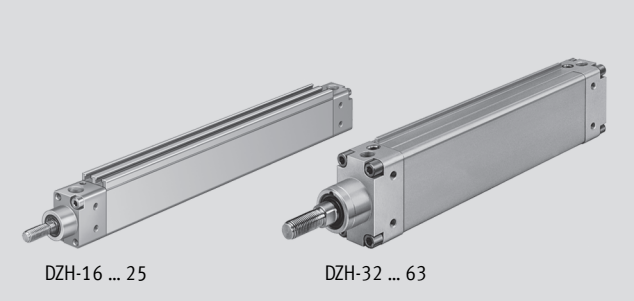

General technical data							
Piston ∅	16	20	25	32	40	50	63
Pneumatic connection	M5	G⅛	G⅛	G⅛	G¼	G¼	G⅜
End of piston rod Male thread	M6	M8	M10x1.25	M10x1.25	M12x1.25	M16x1.5	M16x1.5
Operating medium	Compressed air in accordance with ISO 8573-1:2010 [7:4:4]						
Note on operating/ pilot medium	Operation with lubricated medium possible (in which case lubricated operation will always be required)						
Constructional design	Piston						
	Piston rod						
Protection against torsion/guide	Oval piston						
Cushioning	Pneumatic cushioning adjustable at both ends						
Cushioning length [mm]	14	17	17	19	21	23	23
Position sensing	For proximity sensing						
Type of mounting	With female thread						
	With accessories						
Mounting position	Any						

Operating pressure [bar]							
Piston ∅	16	20	25	32	40	50	63
	1.0 … 10			0.6 … 10			

Ambient conditions		
Variant	Basic version	S6
Ambient temperature[1] [°C]	−20 … +80	0 … +120
Corrosion resistance class CRC[2]	2	2

1) Observe operating range of proximity sensors
2) Corrosion resistance class 2 according to Festo standard 940 070
Components requiring moderate corrosion resistance. Externally visible parts with primarily decorative surface requirements which are in direct contact with a surrounding industrial atmosphere or media such as cooling or lubricating agents

Note

Sizing software
ProPneu
➔www.festo.com

Forces [N] and torques [Nm]								
Piston ∅		16	20	25	32	40	50	63
Theoretical force at 6 bar, advancing		121	188	295	483	754	1,178	1,870
	S2/S20	104	158	247	415	633	989	1,682
Theoretical force at 6 bar, retracting		104	158	247	415	633	989	1,682
	S2/S20	104	158	247	415	633	989	1,682
Max. torque at the piston rod[1)]		0.5	0.6	0.8	1.0	1.2	1.7	2.0

1) The max. torque must also be observed when fitting mounting attachments to the piston rod

Weights [g]							
Piston ∅	16	20	25	32	40	50	63
Product weight at 0 mm stroke	140	230	330	500	820	1,200	1,690
Additional weight per 10 mm stroke	11	15	21	30	40	60	80

Minimum stroke length [mm] for contactless position sensing with one proximity sensor				
Piston ∅	32	40	50	63
SMEO-1/SMTO-1				
Plug	10			
Cable				

Minimum stroke length [mm] for contactless position sensing with two proximity sensors					
Piston ∅		32	40	50	63
SMEO-1					
Plug	outlet towards caps	86	87	90	91
	outlet towards center	46	48	49	50
Cable	outlet towards caps	63	64	67	68
	outlet towards center	48	50	51	53
SMTO-1					
Plug	outlet towards caps	105	107	106	107
	outlet towards center	not possible as the plug would cover the pneumatic port			
Cable	outlet towards caps	82	84	85	86
	outlet towards center	19	21	20	22

Materials

Sectional view

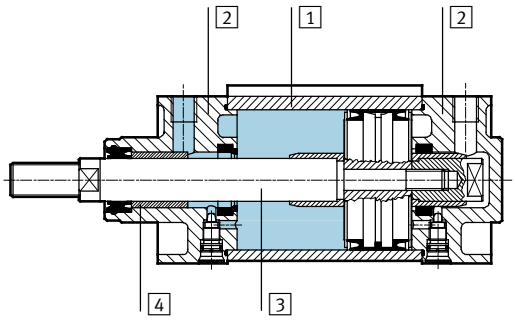

Flat cylinder			Basic version	S6
1	Cylinder barrel		Anodised aluminium	Anodised aluminium
2	Bearing end cap		Aluminium	Aluminium
3	Piston rod	∅ 16 ... 25	Stainless steel	Stainless steel
		∅ 32 ... 63	High-alloy steel	High-alloy steel
4	Dynamic seals		Polyurethane	Fluorocarbon rubber

Dimensions Download CAD data ➔ **www.festo.com**

Basic version

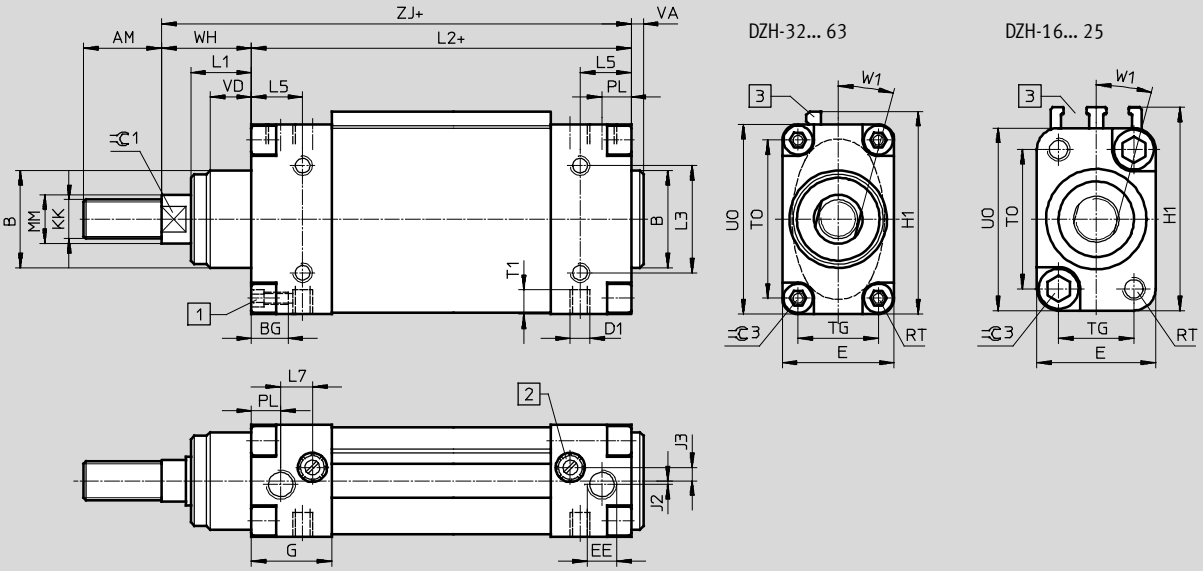

1 Socket head screw with female thread

2 Regulating screw for adjustable end-position cushioning

3 ∅ 16 ... 25: Mounting slot for proximity sensors
∅ 32 ... 63: Mounting rail for proximity sensor

\+ = plus stroke length

∅ [mm]	AM	B ∅ f10	BG	D1	D8 ∅	E	EE	G	H1	J2	J3	KK	L1	L2	L3	L5
16	16	16	5.5	M4	2.3	20	M5	20.5	35.5	–0.7	2.8	M6	12	78.5 ±0.5	12	12
20	20	20	5.5	M4	3.2	23	G⅛	25	39.5	–0.7	5	M8	14	90.5 ±0.5	15	15
25	22	22	7	M5	3.8	26	G⅛	26	44.5	–0.3	4.2	M10x1.25	14	92.5 ±0.5	18	16
32	22	30	13	M6	–	36	G⅛	27	53.3	–	3	M10x1.25	16	94 ±0.7	18	13
40	24	35	13	M6	–	40	G¼	33	66.3	–	6	M12x1.25	20	105 ±0.7	32	16.5
50	32	40	15	M8	–	46	G¼	32.5	82.3	2.5	3	M16x1.5	25	106 ±0.7	44	21
63	32	42	15	M10	–	54	G⅜	36.5	108.3	4	5	M16x1.5	28	115 ±0.7	64	22.5

∅ [mm]	L7	MM ∅	PL	RT	T1	TG	TO	UO	VA	VD	WH ±1	W1	ZJ	ZM	⌯1	⌯3
16	8.5	6	7.5	M4	5.5	12	23	31	2.5	12	17.5	15°	96	114.4 ±0.4	5	4
20	10.5	8	9.3	M4	5.5	15	27	35	2.5	14	18.5	15°	109	128 ±0.4	7	4
25	10	10	10.5	M5	7	16.5	30.5	40	2.5	14	20.5	15°	113	134 ±0.4	9	5
32	10.2	12	9	M5	9	24.5	36.5	48	4	16	26	15°	120	147.1 ±0.5	10	6
40	13.2	16	11	M5	9	28	50	62	5.5	20	30	15°	135	165.3 ±0.5	13	6
50	14	20	10.5	M6	10	33	65	78	5	17	37.5	15°	143.5	181.5 ±0.5	17	6
63	14.5	20	12.5	M6	12	40	90	104	6	20	40	15°	155	195.3 ±0.5	17	6

Note

The maximum permissible torque must not be exceeded when additional components are screwed onto the piston rod. Counterhold by means of the spanner flats ⌯1.

Dimensions Download CAD data ➔ **www.festo.com**

Variant S2 – Through piston rod, S20 – Through, hollow piston rod

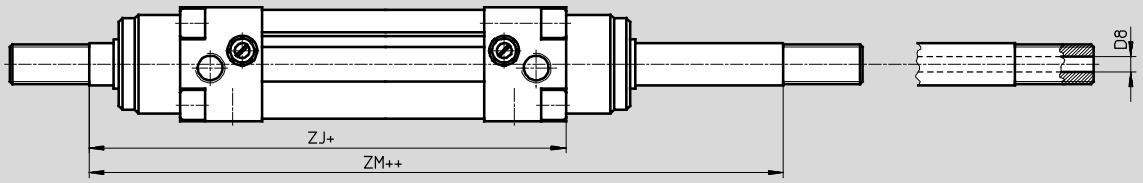

+ = plus stroke length ++ = plus 2x stroke length

∅ [mm]	D8 ∅	ZJ	ZM
16	2,3	96	114,4 ±0,4
20	3,2	109	128 ±0,4
25	3,8	113	134 ±0,4
32	–	120	147,1 ±0,5
40	–	135	165,3 ±0,5
50	–	143,5	181,5 ±0,5
63	–	155	195,3 ±0,5

Ordering data – Basic version

Type	Stroke [mm]	Part No.	Type	Stroke [mm]	Part No.	Type
	Piston ∅ 16 mm			Piston ∅ 20 mm		
	25	**151 145**	**DZH-16-25-PPV-A**	25	**151 134**	**DZH-20-25-PPV-A**
	40	**151 146**	**DZH-16-40-PPV-A**	40	**151 135**	**DZH-20-40-PPV-A**
	50	**151 147**	**DZH-16-50-PPV-A**	50	**151 136**	**DZH-20-50-PPV-A**
	80	**151 148**	**DZH-16-80-PPV-A**	80	**151 137**	**DZH-20-80-PPV-A**
	100	**151 149**	**DZH-16-100-PPV-A**	100	**151 138**	**DZH-20-100-PPV-A**
	125	**151 150**	**DZH-16-125-PPV-A**	125	**151 139**	**DZH-20-125-PPV-A**
	160	**151 151**	**DZH-16-160-PPV-A**	160	**151 140**	**DZH-20-160-PPV-A**
	200	**151 152**	**DZH-16-200-PPV-A**	200	**151 141**	**DZH-20-200-PPV-A**
	250	–	–	250	**151 142**	**DZH-20-250-PPV-A**
	300	–	–	300	–	–
	320	–	–	320	**151 143**	**DZH-20-320-PPV-A**
	Piston ∅ 25 mm			Piston ∅ 32 mm		
	25	**151 121**	**DZH-25-25-PPV-A**[1]	25	**14 041**	**DZH-32-25-PPV-A**[1]
	40	**151 122**	**DZH-25-40-PPV-A**[1]	40	**14 042**	**DZH-32-40-PPV-A**[1]
	50	**151 123**	**DZH-25-50-PPV-A**[1]	50	**14 043**	**DZH-32-50-PPV-A**[1]
	80	**151 124**	**DZH-25-80-PPV-A**[1]	80	**14 044**	**DZH-32-80-PPV-A**[1]
	100	**151 125**	**DZH-25-100-PPV-A**[1]	100	**14 045**	**DZH-32-100-PPV-A**[1]
	125	**151 126**	**DZH-25-125-PPV-A**[1]	125	**14 046**	**DZH-32-125-PPV-A**[1]
	160	**151 127**	**DZH-25-160-PPV-A**[1]	160	**14 047**	**DZH-32-160-PPV-A**[1]
	200	**151 128**	**DZH-25-200-PPV-A**[1]	200	**14 048**	**DZH-32-200-PPV-A**[1]
	250	**151 129**	**DZH-25-250-PPV-A**[1]	250	**14 049**	**DZH-32-250-PPV-A**[1]
	300	–	–	300	**14 050**	**DZH-32-300-PPV-A**[1]
	320	**151 130**	**DZH-25-320-PPV-A**[1]	320	–	–
	400	**151 131**	**DZH-25-400-PPV-A**[1]	400	–	–
	500	**151 132**	**DZH-25-500-PPV-A**[1]	500	–	–
	Piston ∅ 40 mm			Piston ∅ 50 mm		
	25	**14 052**	**DZH-40-25-PPV-A**[1]	25	**14 063**	**DZH-50-25-PPV-A**[1]
	40	**14 053**	**DZH-40-40-PPV-A**[1]	40	**14 064**	**DZH-50-40-PPV-A**[1]
	50	**14 054**	**DZH-40-50-PPV-A**[1]	50	**14 065**	**DZH-50-50-PPV-A**[1]
	80	**14 055**	**DZH-40-80-PPV-A**[1]	80	**14 066**	**DZH-50-80-PPV-A**[1]
	100	**14 056**	**DZH-40-100-PPV-A**[1]	100	**14 067**	**DZH-50-100-PPV-A**[1]
	125	**14 057**	**DZH-40-125-PPV-A**[1]	125	**14 068**	**DZH-50-125-PPV-A**[1]
	160	**14 058**	**DZH-40-160-PPV-A**[1]	160	**14 069**	**DZH-50-160-PPV-A**[1]
	200	**14 059**	**DZH-40-200-PPV-A**[1]	200	**14 070**	**DZH-50-200-PPV-A**[1]
	250	**14 060**	**DZH-40-250-PPV-A**[1]	250	**14 071**	**DZH-50-250-PPV-A**[1]
	300	**14 061**	**DZH-40-300-PPV-A**[1]	300	**14 072**	**DZH-50-300-PPV-A**[1]
	Piston ∅ 63 mm					
	25	**14 074**	**DZH-63-25-PPV-A**[1]			
	40	**14 075**	**DZH-63-40-PPV-A**[1]			
	50	**14 076**	**DZH-63-50-PPV-A**[1]			
	80	**14 077**	**DZH-63-80-PPV-A**[1]			
	100	**14 078**	**DZH-63-100-PPV-A**[1]			
	125	**14 079**	**DZH-63-125-PPV-A**[1]			
	160	**14 080**	**DZH-63-160-PPV-A**[1]			
	200	**14 081**	**DZH-63-200-PPV-A**[1]			
	250	**14 082**	**DZH-63-250-PPV-A**[1]			
	300	**14 083**	**DZH-63-300-PPV-A**[1]			

1) The scope of delivery includes a hexagonal nut for the piston rod thread

Ordering data – Variants				
Type	Piston ∅ [mm]	Stroke [mm]	Part No.	Type
Variable stroke				
	16	10 … 200	**150 295**	**DZH-16-…-PPV-A**
	20	10 … 320	**150 294**	**DZH-20-…-PPV-A**
	25	10 … 500	**150 293**	**DZH-25-…-PPV-A**[1]
	32	10 … 1,000	**14 040**	**DZH-32-…-PPV-A**[1]
	40	10 … 1,000	**14 051**	**DZH-40-…-PPV-A**[1]
	50	10 … 1,000	**14 062**	**DZH-50-…-PPV-A**[1]
	63	10 … 1,000	**14 073**	**DZH-63-…-PPV-A**[1]
S2 – Through piston rod				
	16	10 … 200	**151 155**	**DZH-16-…-PPV-A-S2**
	20	10 … 320	**151 154**	**DZH-20-…-PPV-A-S2**
	25	10 … 500	**151 153**	**DZH-25-…-PPV-A-S2**[1]
	32	10 … 1,000	**151 772**	**DZH-32-…-PPV-A-S2**[1]
	40	10 … 1,000	**151 773**	**DZH-40-…-PPV-A-S2**[1]
	50	10 … 1,000	**151 774**	**DZH-50-…-PPV-A-S2**[1]
	63	10 … 1,000	**151 775**	**DZH-63-…-PPV-A-S2**[1]
S6 – Heat resistant seals up to 120 °C				
	16	10 … 200	**151 156**	**DZH-16-…-PPV-A-S6**
	20	10 … 320	**151 157**	**DZH-20-…-PPV-A-S6**
	25	10 … 500	**151 158**	**DZH-25-…-PPV-A-S6**[1]
	32	10 … 1,000	**16 531**	**DZH-32-…-PPV-A-S6**[1]
	40	10 … 1,000	**16 532**	**DZH-40-…-PPV-A-S6**[1]
	50	10 … 1,000	**16 533**	**DZH-50-…-PPV-A-S6**[1]
	63	10 … 1,000	**16 534**	**DZH-63-…-PPV-A-S6**[1]
S20 – Through, hollow piston rod				
	16	10 … 200	**158 379**	**DZH-16-…-PPV-A-S20**
	20	10 … 320	**158 380**	**DZH-20-…-PPV-A-S20**
	25	10 … 500	**158 381**	**DZH-25-…-PPV-A-S20**[1]

1) The scope of delivery includes a hexagonal nut for the piston rod thread

Ordering data – Wearing parts kits		
Piston ∅	Part No.	Type
16	**121 125**	**DZH-16-PPV-A**
20	**121 126**	**DZH-20-PPV-A**
25	**121 127**	**DZH-25-PPV-A**
32	**108 706**	**DZH-32-PPV-A**
40	**108 707**	**DZH-40-PPV-A**
50	**108 708**	**DZH-50-PPV-A**
63	**108 709**	**DZH-63-PPV-A**

Foot mounting HZS, narrow

Material:
Steel
Free of copper, PTFE and silicone

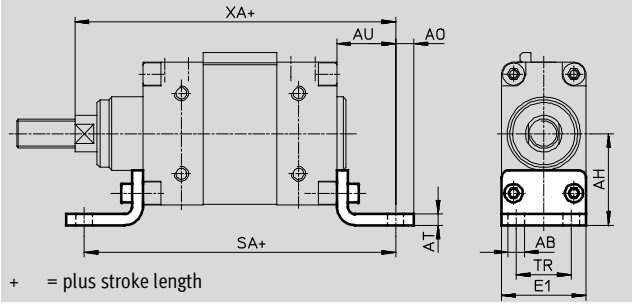

Dimensions and ordering data													
For ∅	AB ∅	AH	AO	AT	AU	E1	SA	TR	XA	CRC[1]	Weight [g]	Part No.	Type
16	4.5	24.5	4	4	21	20	120.5	12	117	2	60	**151 933**	**HZS-16**
20	4.5	27.5	4	4	21	23	132.5	15	130	2	70	**151 932**	**HZS-20**
25	5.5	30	5	4	25	26	142.5	16.5	138	2	90	**151 931**	**HZS-25**
32	7	32	8	4	24	36	142	24	144	2	105	**14 879**	**HZS-32**
40	9	40	10	5	28	40	161	25	163	2	165	**14 880**	**HZS-40**
50	9	50	10	6	32	46	170	30	175.5	2	270	**14 881**	**HZS-50**
63	9	62	15	6	35	54	185	38	190	2	365	**14 882**	**HZS-63**

1) Corrosion resistance class 2 according to Festo standard 940 070
Components requiring moderate corrosion resistance. Externally visible parts with primarily decorative surface requirements which are in direct contact with a surrounding industrial atmosphere or media such as cooling or lubricating agents.

Flange mounting FZS

Material:
Wrought aluminium alloy

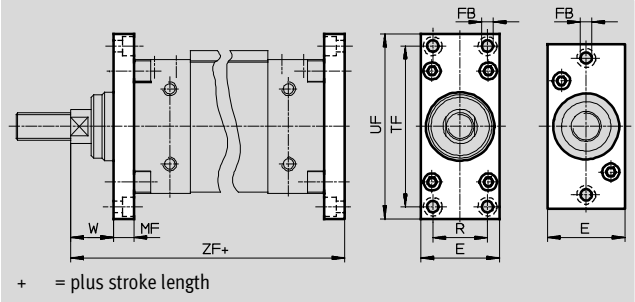

Dimensions and ordering data												
For ∅	E	FB ∅	MF	R	TF	UF	W	ZF	CRC[1]	Weight [g]	Part No.	Type
16	21	4.8	10	–	48	60	7.5	106	2	30	**151 930**	**FZS-16**
20	24	4.8	10	–	54	70	8.5	119	2	40	**151 929**	**FZS-20**
25	27	5.8	10	–	60	75	10.5	123	2	50	**151 928**	**FZS-25**
32	36	5.8	10	24	62	75	16	130	2	60	**14 887**	**FZS-32**
40	40	5.8	10	28	78	90	20	145	2	80	**14 888**	**FZS-40**
50	46	6.8	12	32	94	108	25.5	155.5	2	135	**14 889**	**FZS-50**
63	54	6.8	15	40	120	134	25	170	2	260	**14 890**	**FZS-63**

1) Corrosion resistance class 2 according to Festo standard 940 070
Components requiring moderate corrosion resistance. Externally visible parts with primarily decorative surface requirements which are in direct contact with a surrounding industrial atmosphere or media such as cooling or lubricating agents.

Foot mounting HZB, wide
for piston ∅ 16 … 25 mm

Material:
Wrought aluminium alloy

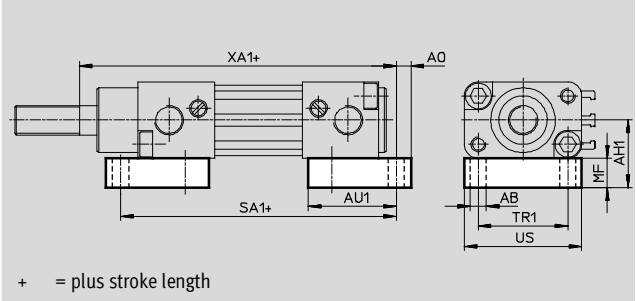

for piston ∅ 32 … 63 mm

Material:
Steel

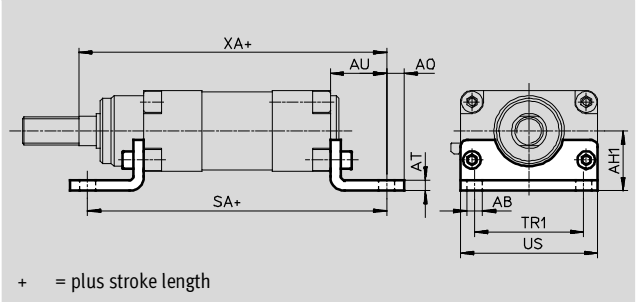

Dimensions and ordering data																	
For ∅	AB ∅	AH1	AO	AT	AU	AU1	MF	SA	SA1	TR1	US	XA	XA1	CRC[1]	Weight [g]	Part No.	Type
16	4.5	20	4	–	–	23	10	–	88.5	23	30	–	101	2	50	**151 936**	**HZB-16**
20	4.5	21.5	4	–	–	26	10	–	100.5	27	35	–	114	2	60	**151 935**	**HZB-20**
25	5.5	23	5	–	–	30	10	–	104.5	30.5	40	–	119	2	80	**151 934**	**HZB-25**
32	7	26	8	4	24	–	–	142	–	32	48	144	–	2	130	**14 875**	**HZB-32**
40	9	29	10	5	28	–	–	161	–	46	62	163	–	2	235	**14 876**	**HZB-40**
50	9	34	10	6	32	–	–	170	–	62	78	175.5	–	2	410	**14 877**	**HZB-50**
63	9	38	15	6	35	–	–	185	–	88	104	190	–	2	640	**14 878**	**HZB-63**

1) Corrosion resistance class 2 according to Festo standard 940 070
Components requiring moderate corrosion resistance. Externally visible parts with primarily decorative surface requirements which are in direct contact with a surrounding industrial atmosphere or media such as cooling or lubricating agents.

Swivel flange SZSB, narrow/wide
for piston ∅ 16 … 25 mm

Material:
High-alloy stainless steel

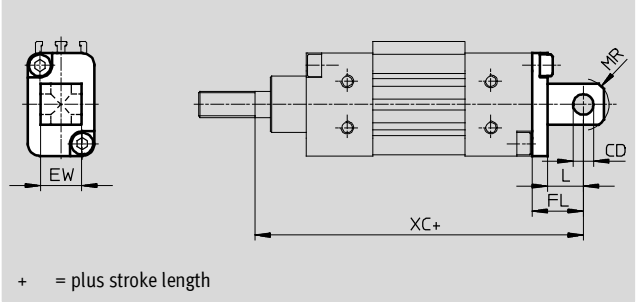

Dimensions and ordering data								
For ∅	CD ∅ H8	EW	FL	L	XC	Weight [g]	Part No.	Type
16	4	8	14	8	110	10	**151 927**	**SZSB-16**
20	6	12	16	10	125	20	**151 926**	**SZSB-20**
25	8	16	20	14	133	40	**151 925**	**SZSB-25**

Swivel flange SZS, narrow
for piston ∅ 32 … 63 mm

Material:
Die-cast aluminium

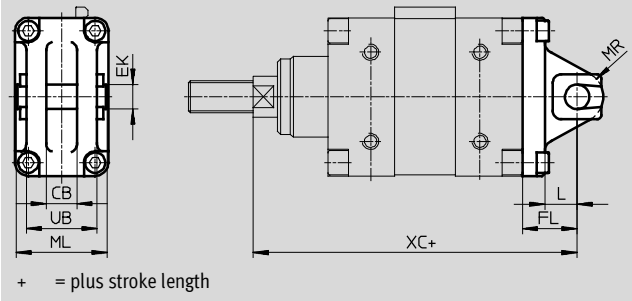

Dimensions and ordering data											
For ∅	CB +0.2	EK ∅ e8	FL	L	ML	MR	UB ±0.1	XC	Weight [g]	Part No.	Type
32	9.4	10	22	13.5	35.6	11	25.8	142	80	**14 883**	**SZS-32**
40	12.4	12	25	15.5	39.6	13	28.8	160	120	**14 884**	**SZS-40**
50	14.4	12	27	15.5	45.6	13	34.8	170.5	170	**14 885**	**SZS-50**
63	16.4	16	35	22.4	53.6	17	40.8	190	320	**14 886**	**SZS-63**

Swivel flange SZB, wide
for piston ∅ 32 … 63 mm

Material:
High-alloy stainless steel

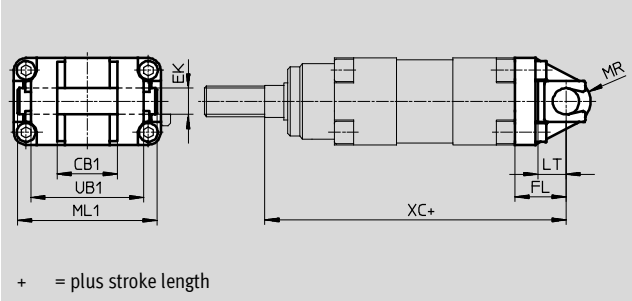

Dimensions and ordering data											
For ∅	CB1 H14	EK ∅ e8	FL	LT	ML1	MR	UB1	XC	Weight [g]	Part No.	Type
32	16	10	22	14	47	11	$36_{-0.7}$	142	170	**30 798**	**SZB-32**
40	28	12	25	15.5	61	13	52_{-1}	160	280	**30 799**	**SZB-40**
50	32	12	27	16	77	13	60_{-1}	170.5	410	**30 629**	**SZB-50**
63	40	16	35	23	103	17	70_{-1}	190	660	**30 630**	**SZB-63**

Clevis foot LBZB
for piston ∅ 32 mm

Material:
Tempered steel

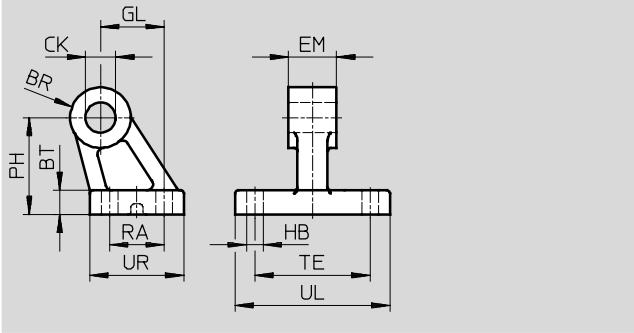

Clevis foot LBZS
for piston ∅ 32 ... 63 mm

Material:
Special steel casting

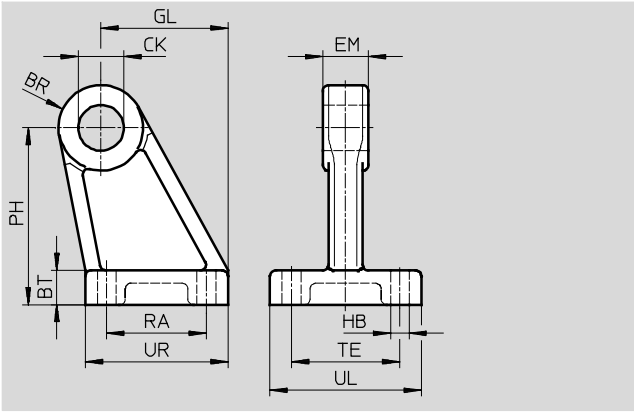

Dimensions and ordering data														
For ∅	BR	BT	CK ∅	EM −0.3	GL	HB ∅	PH	RA	TE	UL	UR	Weight [g]	Part No.	Type
LBZB														
32	10	8	10^{H9}	15.8	21	5.5	32	18	38	41	31	131	**33 842**	**LBZB-32**
LBZS														
32	10	8	10^{H8}	9	21	5.5	33.5	18	24	35	31	92	**33 843**	**LBZS-32**
40	11	10	12^{H8}	12	24	5.5	40	22	28	39	35	138	**33 844**	**LBZS-40**
50	13	12	12^{H8}	14	33	6.6	51.5	30	30	45	45	244	**33 845**	**LBZS-50**
63	15	12	16^{H8}	16	37	6.6	62	35	38	53	51	321	**33 846**	**LBZS-63**

Ordering data – Mounting attachments Technical data ➔ Internet: clevis foot

Designation	For ∅	Part No.	Type
Clevis foot LBN			
	16	**6 058**	**LBN-12/16**
	20	**6 059**	**LBN-20/25**
	25		
Clevis foot LBG			
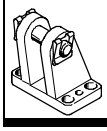	32	**31 761**	**LBG-32**
	40	**31 762**	**LBG-40**
	50	**31 763**	**LBG-50**
	63	**31 764**	**LBG-63**

Designation	For ∅	Part No.	Type
Clevis foot LN			
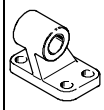	32	**5 147**	**LN-32**
	40	**5 148**	**LN-40**
	50	**5 149**	**LN-50**
	63	**5 150**	**LN-63**
Right-angle clevis foot LQG			
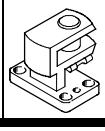	32	**31 768**	**LQG-32**
	40	**31 769**	**LQG-40**
	50	**31 770**	**LQG-50**
	63	**31 771**	**LQG-63**

Ordering data – Piston rod attachments Technical data ➔ Internet: piston-rod attachment

Designation	For ∅	Part No.	Type
Rod eye SGS			
	16	**9 254**	**SGS-M6**
	20	**9 255**	**SGS-M8**
	25	**9 261**	**SGS-M10x1,25**
	32		
	40	**9 262**	**SGS-M12x1,25**
	50	**9 263**	**SGS-M16x1,5**
	63		
Rod clevis SG			
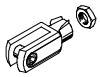	16	**3 110**	**SG-M6**
	20	**3 111**	**SG-M8**
	25	**6 144**	**SG-M10x1,25**
	32		
	40	**6 145**	**SG-M12x1,25**
	50	**6 146**	**SG-M16x1,5**
	63		
Coupling piece KSZ			
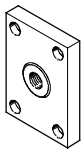	16	**36 123**	**KSZ-M6**
	20	**36 124**	**KSZ-M8**
	25	**36 125**	**KSZ-M10x1,25**
	32		
	40	**36 126**	**KSZ-M12x1,25**
	50	**36 127**	**KSZ-M16x1,5**
	63		

Designation	For ∅	Part No.	Type
Rod clevis SGA			
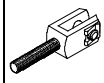	16	**–**	**–**
	20	**–**	**–**
	25	**32 954**	**SGA-M10x1,25**
	32		
	40	**10 767**	**SGA-M12x1,25**
	50	**10 768**	**SGA-M16x1,5**
	63		
Self-aligning rod coupler FK			
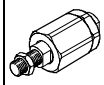	16	**2 061**	**FK-M6**
	20	**2 062**	**FK-M8**
	25	**6 140**	**FK-M10x1,25**
	32		
	40	**6 141**	**FK-M12x1,25**
	50	**6 142**	**FK-M16x1,5**
	63		
Adapter AD			
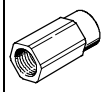	16	**157 328**	**AD-M6-M5**
		157 329	**AD-M6-⅛**
		157 330	**AD-M6-¼**
	20	**157 331**	**AD-M8-⅛**
		157 332	**AD-M8-¼**
	25	**157 333**	**AD-M10x1,25-⅛**
		157 334	**AD-M10x1,25-¼**

Ordering data – Block-shaped proximity sensors, magneto-resistive							Technical data ➔ Internet: smto
	Mounting	Switch output	Electrical connection		Cable length [m]	Part No.	Type
			Cables	M8 plug			
NO contact							
	With accessories	PNP	3 wires	–	2.5	**151 683**	**SMTO-1-PS-K-LED-24-C**
			–	3-pin	–	**151 685**	**SMTO-1-PS-S-LED-24-C**
		NPN	3 wires	–	2.5	**151 684**	**SMTO-1-NS-K-LED-24-C**
			–	3-pin	–	**151 686**	**SMTO-1-NS-S-LED-24-C**

Ordering data – Block-shaped proximity sensors, magnetic reed						Technical data ➔ Internet: smeo
	Mounting	Electrical connection		Cable length [m]	Part No.	Type
		Cables	M8 plug			
NO contact						
	With accessories	3 wires	–	2.5	**30 459**	**SMEO-1-LED-24-B**
		3 wires	–	5.0	**151 672**	**SMEO-1-LED-24-K5-B**
		–	3-pin	–	**150 848**	**SMEO-1-S-LED-24-B**

Ordering data – Block-shaped proximity sensor, pneumatic				Technical data ➔ Internet: smpo
	Mounting	Pneumatic connection	Part No.	Type
3/2-way valve, normally closed				
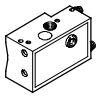	With accessories	Barbed fitting for tubing ID of 3 mm	**31 008**	**SMPO-1-H-B**

Ordering data – Mounting kit			Technical data ➔ Internet: smb
	Mounting	Part No.	Type
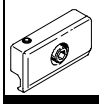	for cylinder with tie rod ∅ 6 mm or DUO rail mounting profile	**11 886**	**SMB-1**

Ordering data – Proximity sensors for T-slot, magneto-resistive Technical data ➔ Internet: smt

	Type of mounting	Switch output	Electrical connection	Cable length [m]	Part No.	Type
N/O contact						
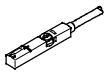	Insertable in the slot from above, flush with cylinder profile	PNP	Cable, 3-wire	2.5	**543 867**	**SMT-8M-PS-24V-K-2,5-OE**
			Plug M8x1, 3-pin	0.3	**543 866**	**SMT-8M-PS-24V-K-0,3-M8D**
			Plug M12x1, 3-pin	0.3	**543 869**	**SMT-8M-PS-24V-K-0,3-M12**
		NPN	Cable, 3-wire	2.5	**543 870**	**SMT-8M-NS-24V-K-2,5-OE**
			Plug M8x1, 3-pin	0.3	**543 871**	**SMT-8M-NS-24V-K-0,3-M8D**
	Insertable in the slot lengthwise, flush with the cylinder profile	PNP	Cable, 3-wire	2.5	**175 436**	**SMT-8-PS-K-LED-24-B**
			Plug M8x1, 3-pin	0.3	**175 484**	**SMT-8-PS-S-LED-24-B**
N/C contact						
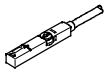	Insertable in the slot from above, flush with cylinder profile	PNP	Cable, 3-wire	7.5	**543 873**	**SMT-8M-PO-24V-K7,5-OE**

Ordering data – Proximity sensors for T-slot, magnetic reed Technical data ➔ Internet: sme

	Type of mounting	Switch output	Electrical connection	Cable length [m]	Part No.	Type
N/O contact						
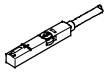	Insertable in the slot from above, flush with cylinder profile	Contacting	Cable, 3-wire	2.5	**543 862**	**SME-8M-DS-24V-K-2,5-OE**
				5.0	**543 863**	**SME-8M-DS-24V-K-5,0-OE**
			Cable, 2-wire	2.5	**543 872**	**SME-8M-ZS-24V-K-2,5-OE**
			Plug M8x1, 3-pin	0.3	**543 861**	**SME-8M-DS-24V-K-0,3-M8D**
	Insertable in the slot lengthwise, flush with the cylinder profile	Contacting	Cable, 3-wire	2.5	**150 855**	**SME-8-K-LED-24**
			Plug M8x1, 3-pin	0.3	**150 857**	**SME-8-S-LED-24**
N/C contact						
	Insertable in the slot lengthwise, flush with the cylinder profile	Contacting	Cable, 3-wire	7.5	**160 251**	**SME-8-O-K-LED-24**

Ordering data – Connecting cables Technical data ➔ Internet: nebu

	Electrical connection, left	Electrical connection, right	Cable length [m]	Part No.	Type
	Straight socket, M8x1, 3-pin	Cable, open end, 3-wire	2.5	**541 333**	**NEBU-M8G3-K-2.5-LE3**
			5	**541 334**	**NEBU-M8G3-K-5-LE3**
	Straight socket, M12x1, 5-pin	Cable, open end, 3-wire	2.5	**541 363**	**NEBU-M12G5-K-2.5-LE3**
			5	**541 364**	**NEBU-M12G5-K-5-LE3**
	Angled socket, M8x1, 3-pin	Cable, open end, 3-wire	2.5	**541 338**	**NEBU-M8W3-K-2.5-LE3**
			5	**541 341**	**NEBU-M8W3-K-5-LE3**
	Angled socket, M12x1, 5-pin	Cable, open end, 3-wire	2.5	**541 367**	**NEBU-M12W5-K-2.5-LE3**
			5	**541 370**	**NEBU-M12W5-K-5-LE3**

Ordering data – Slot cover for T-slot

	Mounting	Length	Part No.	Type
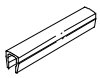	inserted from above	2x 0.5 m	**151 680**	**ABP-5-S**

Ordering data – One-way flow control valves					Technical data ➔ Internet: grl
	Connection		Material	Part No.	Type
	Thread	For tubing OD			
for exhaust air					
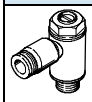	M5	3	Metal design	193 137	GRLA-M5-QS-3-D
		4		193 138	GRLA-M5-QS-4-D
		6		193 139	GRLA-M5-QS-6-D
	G1/8	3		193 142	GRLA-1/8-QS-3-D
		4		193 143	GRLA-1/8-QS-4-D
		6		193 144	GRLA-1/8-QS-6-D
		8		193 145	GRLA-1/8-QS-8-D
	G1/4	6		193 146	GRLA-1/4-QS-6-D
		8		193 147	GRLA-1/4-QS-8-D
		10		193 148	GRLA-1/4-QS-10-D
	G3/8	6		193 149	GRLA-3/8-QS-6-D
		8		193 150	GRLA-3/8-QS-8-D
		10		193 151	GRLA-3/8-QS-10-D
for supply air					
	M5	3	Metal design	193 153	GRLZ-M5-QS-3-D
		4		193 154	GRLZ-M5-QS-4-D
		6		193 155	GRLZ-M5-QS-6-D
	G1/8	3		193 156	GRLZ-1/8-QS-3-D
		4		193 157	GRLZ-1/8-QS-4-D
		6		193 158	GRLZ-1/8-QS-6-D
		8		193 159	GRLZ-1/8-QS-8-D