On-off/soft-start valves MS-EM/EE/DL/DE/SV, MS series

FESTO

On-off/soft-start valves MS-EM/EE/DL/DE/SV, MS series

Product range overview – MS series service units

Type		Size	Pneumatic connection in housing	Connecting plate	Pressure regulation range [bar] 0.05 ... 0.7	0.05 ... 2.5	0.1 ... 4	0.3 ... 7	0.1 ... 12	0.5 ... 16	Grade of filtration [µm] 0.01	1	5	40
Code				AG...	D2	D4	D5	D6	D7	D8	A	B	C	E
Service units														
MSB-FRC	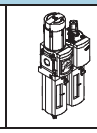	4	G1/8, G1/4	G1/8, G1/4, G3/8	–	–	–	■	■	–	–	–	■	■
		6	G1/4, G3/8, G1/2	G1/4, G3/8, G1/2, G3/4	–	–	–	■	■	–	–	–	■	■
		9	–											
		12	–											
Service unit combinations (further variants can be ordered using the configurator ➔ Internet: msb4, msb6 or msb9)														
MSB	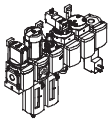	4	G1/4	G1/8, G1/4, G3/8	–	–	–	■	■	–	–	–	■	■
		6	G1/2	G1/4, G3/8, G1/2, G3/4	–	–	–	■	■	–	–	–	■	■
		9	–											
		12	–											
Individual devices														
Filter regulators **MS-LFR**	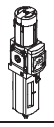	4	G1/8, G1/4	G1/8, G1/4, G3/8	–	–	■	■	■	–	–	–	■	■
		6	G1/4, G3/8, G1/2	G1/4, G3/8, G1/2, G3/4	–	–	■	■	■	■	–	–	■	■
		9	G3/4, G1	G1/2, G3/4, G1, G1 1/4, G1 1/2	–	–	■	■	–	–	–	–	■	■
		12	–	G1, G1 1/4, G1 1/2, G2	–	–	–	■	■	■	–	–	■	■
Filters **MS-LF**	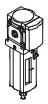	4	G1/8, G1/4	G1/8, G1/4, G3/8	–	–	–	–	–	–	–	–	■	■
		6	G1/4, G3/8, G1/2	G1/4, G3/8, G1/2, G3/4	–	–	–	–	–	–	–	–	■	■
		9	G3/4, G1	G1/2, G3/4, G1, G1 1/4, G1 1/2	–	–	–	–	–	–	–	–	■	■
		12	–	G1, G1 1/4, G1 1/2, G2	–	–	–	–	–	–	–	–	■	■
Fine and micro filters **MS-LFM**	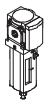	4	G1/8, G1/4	G1/8, G1/4, G3/8	–	–	–	–	–	–	■	■	–	–
		6	G1/4, G3/8, G1/2	G1/4, G3/8, G1/2, G3/4	–	–	–	–	–	–	■	■	–	–
		9	G3/4, G1	G1/2, G3/4, G1, G1 1/4, G1 1/2	–	–	–	–	–	–	■	■	–	–
		12	–	G1, G1 1/4, G1 1/2, G2	–	–	–	–	–	–	■	■	–	–
Activated carbon filters **MS-LFX**	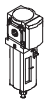	4	G1/8, G1/4	G1/8, G1/4, G3/8	–	–	–	–	–	–	–	–	–	–
		6	G1/4, G3/8, G1/2	G1/4, G3/8, G1/2, G3/4	–	–	–	–	–	–	–	–	–	–
		9	G3/4, G1	G1/2, G3/4, G1, G1 1/4, G1 1/2	–	–	–	–	–	–	–	–	–	–
		12	–	G1, G1 1/4, G1 1/2, G2	–	–	–	–	–	–	–	–	–	–
Water separators **MS-LWS**	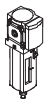	4	–											
		6	G1/4, G3/8, G1/2	G1/4, G3/8, G1/2, G3/4	–	–	–	–	–	–	–	–	–	–
		9	–											
		12	–											

On-off/soft-start valves MS-EM/EE/DL/DE/SV, MS series

Product range overview – MS series service units

Type	Size	Bowl guard		Condensate drains				Pressure indicator					Security		Options		→ Page/ Internet
		Plastic bowl with plastic bowl guard	Metal bowl	Manual rotary	Semi-automatic	Fully automatic	External, fully automatic, electrical	Cover plate (without pressure gauge)	Integrated MS pressure gauge	Adapter plate for EN pressure gauge G1/8	Adapter plate for EN pressure gauge G1/4	Pressure sensor	Rotary knob with detent, lockable via accessories	Rotary knob with integrated lock	Silencer	Flow direction from right to left	
Code		R	U	M	H	V	E...	VS	AG	A8	A4	AD...	AS	E11	S	Z	
Service units																	
MSB-FRC	4	■	–	■	–	■	–	–	■	–	–	–	■	–	–	■	msb4
	6	■	■	■	–	■	–	–	■	–	–	–	■	–	–	■	msb6
	9	–															–
	12	–															–
Service unit combinations																	
MSB	4	■	■	■	–	■	–	–	■	–	–	–	■	–	–	■	msb4
	6	■	■	■	–	■	–	–	■	–	–	–	■	–	–	■	msb6
	9	–															–
	12	–															–
Individual devices																	
Filter regulators	4	■	■	■	■	■	–	■	■	■	■	■	■	■	–	■	ms4-lfr
MS-LFR	6	■	■	■	■	■	■	■	■	–	■	■	■	■	–	■	ms6-lfr
	9	–	■	■	■	■	■	■	■	–	■	■	■	■	–	■	ms9-lfr
	12	–	■	■	–	■	■	■	■	–	■	–	■	■	–	■	ms12-lfr
Filters	4	■	■	■	■	■	–	–	–	–	–	–	–	–	–	■	ms4-lf
MS-LF	6	■	■	■	■	■	■	–	–	–	–	–	–	–	–	■	ms6-lf
	9	–	■	■	■	■	■	–	–	–	–	–	–	–	–	■	ms9-lf
	12	–	■	■	–	■	■	–	–	–	–	–	–	–	–	■	ms12-lf
Fine and micro	4	■	■	■	■	■	–	–	–	–	–	–	–	–	–	■	ms4-lfm
filters	6	■	■	■	■	■	■	–	–	–	–	–	–	–	–	■	ms6-lfm
MS-LFM	9	–	■	■	–	■	■	–	–	–	–	–	–	–	–	■	ms9-lfm
	12	–	■	■	–	■	■	–	–	–	–	–	–	–	–	■	ms12-lfm
Activated carbon	4	■	■	–	–	–	–	–	–	–	–	–	–	–	–	■	ms4-lfx
filters	6	■	■	–	–	–	–	–	–	–	–	–	–	–	–	■	ms6-lfx
MS-LFX	9	–	■	–	–	–	–	–	–	–	–	–	–	–	–	■	ms9-lfx
	12	–	■	–	–	–	–	–	–	–	–	–	–	–	–	■	ms12-lfx
Water separators	4	–															–
MS-LWS	6	–	■	–	–	■	■	–	–	–	–	–	–	–	–	■	ms6-lws
	9	–															–
	12	–															–

On-off/soft-start valves MS-EM/EE/DL/DE/SV, MS series

Product range overview – MS series service units

Type		Size	Pneumatic connection in housing	Connecting plate	Pressure regulation range [bar]						Supply voltage			
					0.05 ... 0.7	0.05 ... 2.5	0.1 ... 4	0.3 ... 7	0.1 ... 12	0.5 ... 16	24 V DC, connection pattern to EN 175301	24 V DC, connection pattern M12 to DESINA	110 V AC, connection pattern to EN 175301	230 V AC, connection pattern to EN 175301
Code				AG...	D2	D4	D5	D6	D7	D8	V24	V24P	V110	V230
Individual devices														
Pressure regulators **MS-LR**		4	G⅛, G¼	G⅛, G¼, G⅜	–	–	■	■	■	–	–	–	–	–
		6	G¼, G⅜, G½	G¼, G⅜, G½, G¾	–	–	■	■	■	■	–	–	–	–
		9	G¾, G1	G½, G¾, G1, G1¼, G1½	–	–	■	■	–	–	–	–	–	–
		12	–	G1, G1¼, G1½, G2	–	–	–	■	■	■	–	–	–	–
Pressure regulators **MS-LRB**		4	G¼	G⅛, G¼, G⅜	–	–	■	■	■	–	–	–	–	–
		6	G½	G¼, G⅜, G½, G¾	–	–	■	■	■	■	–	–	–	–
		9	–											
		12	–											
Precision pressure regulators **MS-LRP**		4	–											
		6	G¼, G⅜, G½	G¼, G⅜, G½, G¾	■	■	■	–	■	–	–	–	–	–
		9	–											
		12	–											
Precision pressure regulators **MS-LRPB**		4	–											
		6	G½	G¼, G⅜, G½, G¾	■	■	■	–	■	–	–	–	–	–
		9	–											
		12	–											
Electrical pressure regulators **MS-LRE**		4	–											
		6	G¼, G⅜, G½	G¼, G⅜, G½, G¾	–	–	■	■	■	■	–	–	–	–
		9	–											
		12	–											
Lubricators **MS-LOE**	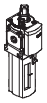	4	G⅛, G¼	G⅛, G¼, G⅜	–	–	–	–	–	–	–	–	–	–
		6	G¼, G⅜, G½	G¼, G⅜, G½, G¾	–	–	–	–	–	–	–	–	–	–
		9	–											
		12	–	G1, G1¼, G1½, G2	–	–	–	–	–	–	–	–	–	–
Electrical on-off valves **MS-EM(1)**		4	G⅛, G¼	G⅛, G¼, G⅜	–	–	–	–	–	–	–	–	–	–
		6	G¼, G⅜, G½	G¼, G⅜, G½, G¾	–	–	–	–	–	–	–	–	–	–
		9	G¾, G1	G½, G¾, G1, G1¼, G1½	–	–	–	–	–	–	–	–	–	–
		12	–	G1, G1¼, G1½, G2	–	–	–	–	–	–	–	–	–	–
Electrical on-off valves **MS-EE**		4	G⅛, G¼	G⅛, G¼, G⅜	–	–	–	–	–	–	■	–	■	■
		6	G¼, G⅜, G½	G¼, G⅜, G½, G¾	–	–	–	–	–	–	■	–	■	■
		9	G¾, G1	G½, G¾, G1, G1¼, G1½	–	–	–	–	–	–	■	■	■	■
		12	–	G1, G1¼, G1½, G2	–	–	–	–	–	–	■	■	■	■
Electrical soft-start valves **MS-DL**		4	G⅛, G¼	G⅛, G¼, G⅜	–	–	–	–	–	–	–	–	–	–
		6	G¼, G⅜, G½	G¼, G⅜, G½, G¾	–	–	–	–	–	–	–	–	–	–
		9	–											
		12	–	G1, G1¼, G1½, G2	–	–	–	–	–	–	–	–	–	–
Electrical soft-start valves **MS-DE**		4	G⅛, G¼	G⅛, G¼, G⅜	–	–	–	–	–	–	■	–	■	■
		6	G¼, G⅜, G½	G¼, G⅜, G½, G¾	–	–	–	–	–	–	■	–	■	■
		9	–											
		12	–	G1, G1¼, G1½, G2	–	–	–	–	–	–	■	■	■	■
Soft start and exhaust valves **MS-SV**		4	–											
		6	G½	G¼, G⅜, G½, G¾	–	–	–	–	–	–	■	–	–	–
		9	–											
		12	–											

On-off/soft-start valves MS-EM/EE/DL/DE/SV, MS series

Product range overview – MS series service units

Type	Size	Bowl guard		Pressure indicator					Security		Options		→ Page/ Internet
		Plastic bowl with plastic bowl guard	Metal bowl	Cover plate (without pressure gauge)	Integrated MS pressure gauge	Adapter plate for EN pressure gauge G1/8	Adapter plate for EN pressure gauge G1/4	Pressure sensor	Rotary knob with detent, lockable via accessories	Rotary knob with integrated lock	Silencer	Flow direction from right to left	
Code		R	U	VS	AG	A8	A4	AD...	AS	E11	S	Z	
Individual devices													
Pressure regulators **MS-LR**	4	–	–	■	■	■	■	■	■	■	–	■	ms4-lr
	6	–	–	■	■	–	■	■	■	■	–	■	ms6-lr
	9	–	–	■	■	–	■	■	■	■	–	■	ms9-lr
	12	–	–	■	■	–	■	–	■	■	–	■	ms12-lr
Pressure regulators **MS-LRB**	4	–	–	■	■	■	■	■	■	■	–	■	ms4-lrb
	6	–	–	■	■	–	■	■	■	■	–	■	ms6-lrb
	9	–											–
	12	–											–
Precision pressure regulators **MS-LRP**	4	–											–
	6	–	–	■	–	■	■	■	■	■	–	■	ms6-lrp
	9	–											–
	12	–											–
Precision pressure regulators **MS-LRPB**	4	–											–
	6	–	–	■	–	■	■	■	■	■	–	■	ms6-lrpb
	9	–											–
	12	–											–
Electrical pressure regulators **MS-LRE**	4	–											–
	6	–	–	■	■	–	■	–	–	–	–	■	ms6-lre
	9	–											–
	12	–											–
Lubricators **MS-LOE**	4	■	■	–	–	–	–	–	–	–	–	■	ms4-loe
	6	■	■	–	–	–	–	–	–	–	–	■	ms6-loe
	9	–											–
	12	–	■	–	–	–	–	–	–	–	–	■	ms12-loe
Electrical on-off valves **MS-EM(1)**	4	–	–	■	■	■	■	■	–	–	■	■	8
	6	–	–	■	■	–	■	■	–	–	■	■	8
	9	–	–	■	■	–	■	■	–	–	■	■	
	12	–	–	■	■	–	■	–	–	–	■	■	58
Electrical on-off valves **MS-EE**	4	–	–	■	■	■	■	■	–	–	■	■	18
	6	–	–	■	■	–	■	■	–	–	■	■	18
	9	–	–	■	■	–	■	■	–	–	■	■	
	12	–	–	■	■	–	■	–	–	–	■	■	64
Electrical soft-start valves **MS-DL**	4	–	–	■	■	■	■	■	–	–	–	■	30
	6	–	–	■	■	–	■	■	–	–	–	■	30
	9	–											–
	12	–	–	■	■	–	■	–	–	–	–	■	70
Electrical soft-start valves **MS-DE**	4	–	–	■	■	■	■	■	–	–	–	■	38
	6	–	–	■	■	–	■	■	–	–	–	■	38
	9	–											–
	12	–	–	■	■	–	■	–	–	–	–	■	76
Soft start and exhaust valves **MS-SV**	4	–											–
	6	–	–	■	■	–	■	■	–	–	■	■	48
	9	–											–
	12	–											–

On-off/soft-start valves MS-EM/EE/DL/DE/SV, MS series

Product range overview – MS series service units

Type		Size	Pneumatic connection in housing	Connecting plate	Pressure regulation range [bar]				Supply voltage			
					0.1 ... 4	0.3 ... 7	0.1 ... 12	0.5 ... 16	24 V DC, connection pattern to EN 175301	24 V DC, connection pattern M12 to DESINA	110 V AC, connection pattern to EN 175301	230 V AC, connection pattern to EN 175301
Code				AG...	D5	D6	D7	D8	V24	V24P	V110	V230
Individual devices												
Membrane air dryers **MS-LDM1**		4	G⅛, G¼	G⅛, G¼, G⅜	–	–	–	–	–	–	–	–
		6	G¼, G⅜, G½	G¼, G⅜, G½, G¾	–	–	–	–	–	–	–	–
		9	–									
		12	–									
Branching modules **MS-FRM**		4	G⅛, G¼	G⅛, G¼, G⅜	–	–	–	–	–	–	–	–
		6	G¼, G⅜, G½	G¼, G⅜, G½, G¾	–	–	–	–	–	–	–	–
		9	G¾, G1	G½, G¾, G1, G1¼, G1½	–	–	–	–	–	–	–	–
		12	–	G1, G1¼, G1½, G2	–	–	–	–	–	–	–	–
Distributor blocks **MS-FRM-FRZ**		4	G¼	–	–	–	–	–	–	–	–	–
		6	G½	–	–	–	–	–	–	–	–	–
		9	–									
		12	–									
Flow sensors **SFAM**		4	–									
		6	G½	G½	–	–	–	–	–	–	–	–
		9	–									
		12	–									

On-off/soft-start valves MS-EM/EE/DL/DE/SV, MS series

Product range overview – MS series service units

Type	Size	Bowl guard		Pressure indicator					Switch output		Options		→ Page/ Internet
		Plastic bowl with plastic bowl guard	Metal bowl	Cover plate (without pressure gauge)	Integrated MS pressure gauge	Adapter plate for EN pressure gauge G1/8	Adapter plate for EN pressure gauge G1/4	Pressure sensor	2x PNP	2x NPN	Silencer	Flow direction from right to left	
Code		R	U	VS	AG	A8	A4	AD...	P2/2S	N2/2S	S	Z/R	
Individual devices													
Membrane air dryers **MS-LDM1**	4	–	■	–	–	–	–	–	–	–	–	■	ms4-ldm1
	6	–	■	–	–	–	–	–	–	–	–	■	ms6-ldm1
	9	–											–
	12	–											–
Branching modules **MS-FRM**	4	–	–	■	■	■	■	■	–	–	–	■	ms4-frm
	6	–	–	■	■	–	■	■	–	–	–	■	ms6-frm
	9	–	–	■	■	–	■	■	–	–	–	■	ms9-frm
	12	–	–	■	–	–	–	–	–	–	–	–	ms12-frm
Distributor blocks **MS-FRM-FRZ**	4	–	–	–	–	–	–	–	–	–	–	■	ms4-frm
	6	–	–	–	–	–	–	–	–	–	–	■	ms6-frm
	9	–											–
	12	–											–
Flow sensors **SFAM**	4	–											–
	6	–	–	–	–	–	–	–	■	■	–	■	sfam
	9	–											–
	12	–											–

On-off valves MS4/MS6-EM1, MS series

Peripherals overview

FESTO

On-off valve MS4/MS6-EM1

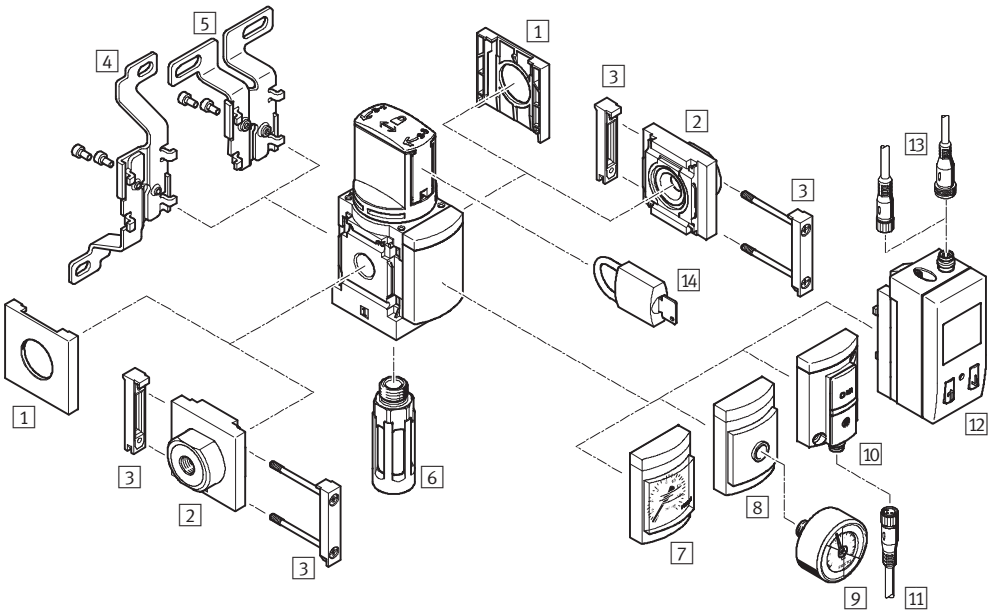

Note

Additional accessories:
- Module connector for combination with size MS4/MS6 or size MS9 ➔ Internet: amv, rmv, armv
- Adapter plate for mounting on profiles ➔ Internet: ipm-80, ipm-40-80, ipm-80-80

Mounting attachments and accessories

		Individual device		Combination		➔ Page/Internet
		Without connecting plate	With connecting plate	Without connecting plate	With connecting plate	
1	Cover cap MS4/6-END	■	–	■	–	ms4-end, ms6-end
2	Connecting plate MS4/6-AG...	–	■	–	■	ms4-ag, ms6-ag
3	Module connector MS4/6-MV	–	■	■	■	ms4-mv, ms6-mv
4	Mounting bracket MS4/6-WB	■	■	–	–	ms4-wb, ms6-wb
5	Mounting bracket MS4-WBM	■	■	–	–	ms4-wbm
6	Silencer U	■	■	■	■	83
7	MS pressure gauge AG	■	■	■	■	16
8	Adapter plate for EN pressure gauge ⅛/¼ A8/A4	■	■	■	■	16
9	Pressure gauge MA	■	■	■	■	83
10	Pressure sensor without display AD7 ... AD10	■	■	■	■	16
11	Connecting cable NEBU-M8...-LE3	■	■	■	■	83
12	Pressure sensor with display AD1 ... AD4	■	■	■	■	16
13	Connecting cable NEBU-M8...-LE3/NEBU-M12...-LE4	■	■	■	■	83
14	Padlock LRVS-D	■	■	■	■	83
–	Mounting bracket MS4/6-WP/WPB/WPE/WPM	–	■	■	■	ms4-wp, ms6-wp

On-off valves MS4/MS6-EM1, MS series

Type codes

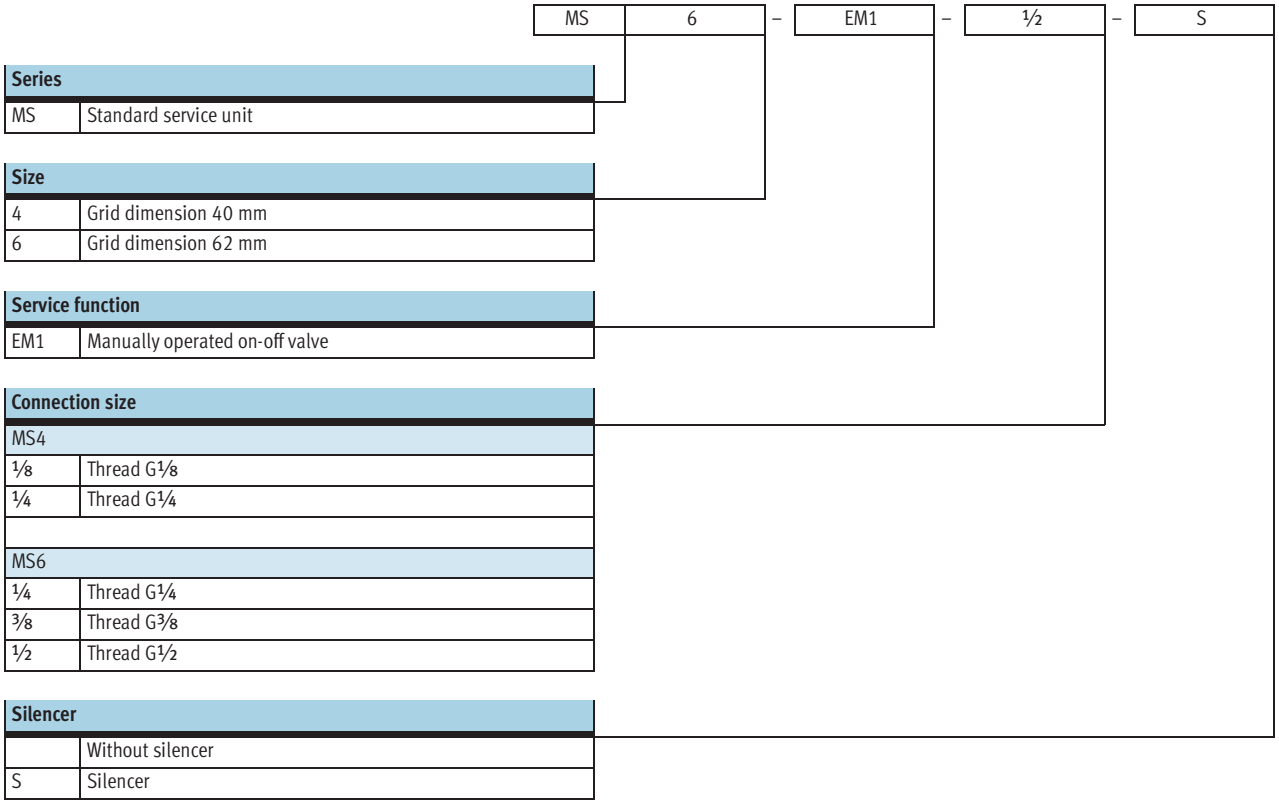

Series	
MS	Standard service unit

Size	
4	Grid dimension 40 mm
6	Grid dimension 62 mm

Service function	
EM1	Manually operated on-off valve

Connection size	
MS4	
⅛	Thread G⅛
¼	Thread G¼
MS6	
¼	Thread G¼
⅜	Thread G⅜
½	Thread G½

Silencer	
	Without silencer
S	Silencer

Additional variants can be ordered using the modular system ➔ 16

- Connecting plates
- Pressure gauge alternatives
- Alternative pressure gauge scale
- Type of mounting
- Alternative flow direction

New
Variant AD7 ... AD10

On-off valves MS4/MS6-EM1, MS series

Technical data

FESTO

Function

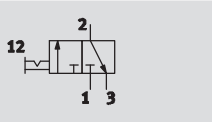

Flow rate
1,200 ... 8,700 l/min

Temperature range
–10 ... +60 °C

Operating pressure
0 ... 18 bar

- Manually operated on-off valve for pressurising and venting pneumatic installations
- The valve is activated by turning the rotary knob
- At connection 3 there is the facility to attach a silencer and/or to duct the exhaust air
- When the valve is closed, the rotary knob can be secured with a padlock
- Optional pressure gauge
- Optional pressure sensor

General technical data						
Size	MS4		MS6			
Pneumatic connection 1, 2	G⅛	G¼	G¼	G⅜	G½	
Pneumatic connection 3	G¼		G½			
Design	Rotary slide valve					
Type of mounting	Via accessories					
	In-line installation					
Assembly position	Any					
Pressure indicator	Via pressure sensor for displaying output pressure via LCD display and electrical output					
	Via pressure sensor for displaying output pressure via operational status indicator and electrical output					
	Via pressure gauge for displaying output pressure					
Valve function	3/2-way valve, double solenoid					
Exhaust function	No flow control					
Switching position display	Knob actuator direction = flow direction					
Pilot control mode	Direct					
Direction of flow	Non-reversible					
C value [l/(s*bar)]	4.6	9.0	10.7	21.2	30.8	
b value	0.51	0.39	0.56	0.49	0.57	

Note: This product conforms to ISO 1179-1 and to ISO 228-1

Standard nominal flow rate qnN[1] [l/min]					
Size	MS4		MS6		
Pneumatic connection	G⅛	G¼	G¼	G⅜	G½
In main flow direction 1 → 2	1,200	2,200	3,000	5,500	8,700
In relief direction 2 → 3	1,900	1,700	6,800	6,600	6,200

1) Measured at p1 = 6 bar and p2 = 5 bar, Δp = 1 bar

On-off valves MS4/MS6-EM1, MS series

Technical data

FESTO

Operating and environmental conditions					
Variant		Standard		Pressure sensor AD...	
Size		MS4	MS6	MS4	MS6
Operating pressure	[bar]	0 ... 14	0 ... 18	0 ... 10	0 ... 10
Operating medium		Compressed air		Filtered compressed air, lubricated or unlubricated, grade of filtration 40 µm	
Ambient temperature	[°C]	–10 ... +60	–10 ... +60	0 ... +50	0 ... +50
Temperature of medium	[°C]	–10 ... +60	–10 ... +60	0 ... +50	0 ... +50
Corrosion resistance	CRC[1)]	2			

1) Corrosion resistance class 2 according to Festo standard 940 070
Components requiring moderate corrosion resistance. Externally visible parts with primarily decorative surface requirements which are in direct contact with a normal industrial environment or media such as coolants or lubricating agents.

Weights [g]		
Size	MS4	MS6
On-off valve	190	580
On-off valve with silencer S	210	655

Materials

Sectional view

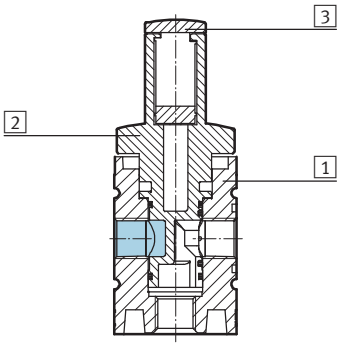

On-off valve		
1	Body	Die-cast aluminium
2	Rotary valve	Reinforced polyamide
3	Lock slide	Reinforced polyamide
–	Seals	Nitrile rubber, polyurethane
	Note on materials	Free of copper and PTFE (not with variants AG or AD...)

On-off valves MS4/MS6-EM1, MS series

Technical data

FESTO

Dimensions – Standard Download CAD data ➔ **www.festo.com**

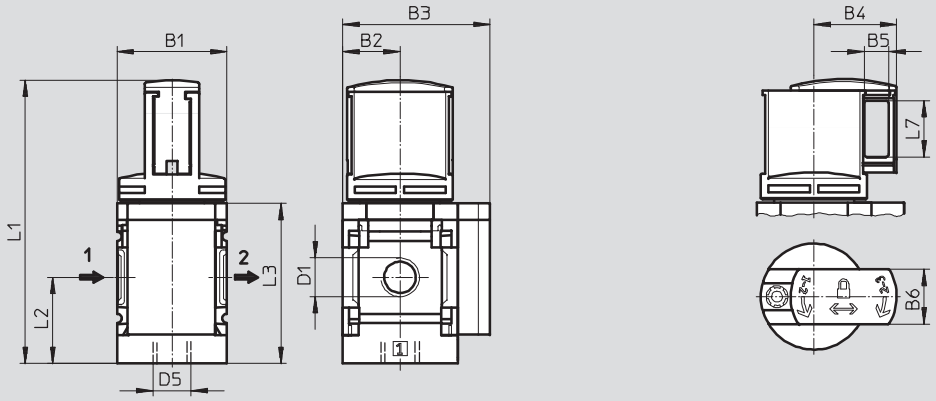

Type	B1	B2	B3	B4	B5	B6	D1	D5	L1	L2	L3	L7
MS4-EM1-⅛	40	21	54	30	9	20	G⅛	G¼	104	31.5	59	20.6
MS4-EM1-¼							G¼					
MS6-EM1-¼	62	31	76	45	10	24	G¼	G½	150.9	45.5	84.5	28.2
MS6-EM1-⅜							G⅜					
MS6-EM1-½							G½					

Note: This product conforms to ISO 1179-1 and to ISO 228-1

On-off valves MS4/MS6-EM1, MS series

Technical data

FESTO

Dimensions – Pressure gauge alternatives

Download CAD data ➔ **www.festo.com**

Integrated MS pressure gauge with standard scale AG or red-green scale RG, display unit [bar]

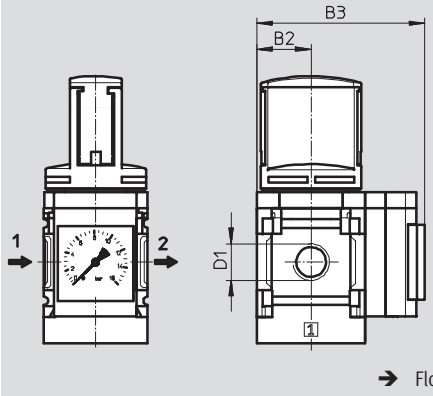

➔ Flow direction

Adapter plate A8/A4 for EN pressure gauge 1/8/1/4, without pressure gauge

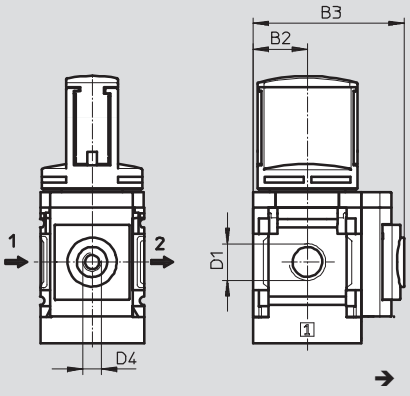

➔ Flow direction

Type	B2	B3	D1	D4
MS4-EM1-1/8-...-AG	21	65	G1/8	–
MS4-EM1-1/4-...-AG			G1/4	
MS4-EM1-1/8-...-RG	21	66.5	G1/8	–
MS4-EM1-1/4-...-RG			G1/4	
MS4-EM1-1/8-...-A8	21	58.5	G1/8	G1/8
MS4-EM1-1/4-...-A8			G1/4	
MS4-EM1-1/8-...-A4	21	58.5	G1/8	G1/4
MS4-EM1-1/4-...-A4			G1/4	
MS6-EM1-1/4-...-AG	31	85	G1/4	–
MS6-EM1-3/8-...-AG			G3/8	
MS6-EM1-1/2-...-AG			G1/2	
MS6-EM1-1/4-...-RG	31	86.5	G1/4	–
MS6-EM1-3/8-...-RG			G3/8	
MS6-EM1-1/2-...-RG			G1/2	
MS6-EM1-1/4-...-A4	31	78.5	G1/4	G1/4
MS6-EM1-3/8-...-A4			G3/8	
MS6-EM1-1/2-...-A4			G1/2	

Note: This product conforms to ISO 1179-1 and to ISO 228-1

On-off valves MS4/MS6-EM1, MS series

Technical data

FESTO

Dimensions – Pressure gauge alternatives Download CAD data ➔ **www.festo.com**

Pressure sensor with LCD display AD1 ... AD4 Technical data ➔ Internet: sde1

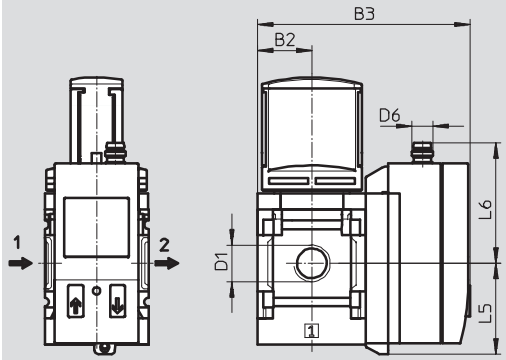

➔ Flow direction

Variant AD1:
SDE1-D10-G2-MS-L-P1-M8 with 3-pin plug M8x1, 1 switching output PNP

Variant AD2:
SDE1-D10-G2-MS-L-N1-M8 with 3-pin plug M8x1, 1 switching output NPN

Variant AD3:
SDE1-D10-G2-MS-L-PI-M12 with 4-pin plug M12x1, 1 switching output PNP and 4 ... 20 mA analogue

Variant AD4:
SDE1-D10-G2-MS-L-NI-M12 with 4-pin plug M12x1, 1 switching output NPN and 4 ... 20 mA analogue

Pressure sensor without LCD display (operational status indicator only) AD7 ... AD10 Technical data ➔ Internet: sde5

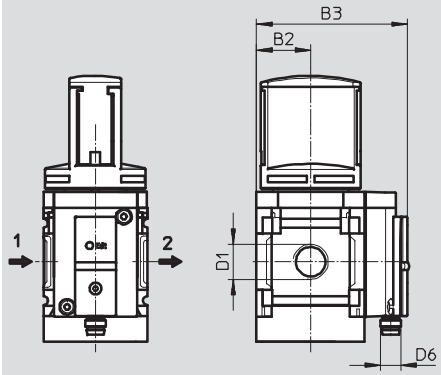

➔ Flow direction

Variant AD7:
SDE5-D10-O-...-P-M8 with 3-pin plug M8x1, threshold value comparator, 1 switching output PNP, N/O contact

Variant AD8:
SDE5-D10-C-...-P-M8 with 3-pin plug M8x1, threshold value comparator, 1 switching output PNP, N/C contact

Variant AD9:
SDE5-D10-O3-...-P-M8 with 3-pin plug M8x1, window comparator, 1 switching output PNP, N/O contact

Variant AD10:
SDE5-D10-C3-...-P-M8 with 3-pin plug M8x1, window comparator, 1 switching output PNP, N/C contact

Type	B2	B3	D1	D6	L5	L6
MS4-EM1-⅛-...-AD1/AD2	21	82.6	G⅛	M8x1	35.1	46.7
MS4-EM1-¼-...-AD1/AD2			G¼			
MS4-EM1-⅛-...-AD3/AD4	21	82.6	G⅛	M12x1	35.1	55.8
MS4-EM1-¼-...-AD3/AD4			G¼			
MS4-EM1-⅛-...-AD7/AD8/AD9/AD10	21	59.1	G⅛	M8x1	–	–
MS4-EM1-¼-...-AD7/AD8/AD9/AD10			G¼			
MS6-EM1-¼-...-AD1/AD2	31	103	G¼	M8x1	35.1	46.7
MS6-EM1-⅜-...-AD1/AD2			G⅜			
MS6-EM1-½-...-AD1/AD2			G½			
MS6-EM1-¼-...-AD3/AD4	31	103	G¼	M12x1	35.1	55.8
MS6-EM1-⅜-...-AD3/AD4			G⅜			
MS6-EM1-½-...-AD3/AD4			G½			
MS6-EM1-¼-...-AD7/AD8/AD9/AD10	31	79	G¼	M8x1	–	–
MS6-EM1-⅜-...-AD7/AD8/AD9/AD10			G⅜			
MS6-EM1-½-...-AD7/AD8/AD9/AD10			G½			

Note: This product conforms to ISO 1179-1 and to ISO 228-1

On-off valves MS4/MS6-EM1, MS series

Technical data

FESTO

Dimensions – Silencer Download CAD data ➔ **www.festo.com**

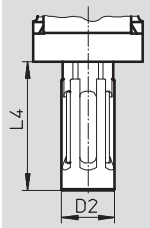

Type	D2	L4
MS4-EM1-...-S	19.5	47
MS6-EM1-...-S	28	106

Ordering data

Size	Connection	Standard		With silencer	
		Part No.	Type	Part No.	Type
MS4	G1/8	**541262**	**MS4-EM1-1/8[1)]**	**541263**	**MS4-EM1-1/8-S[1)]**
	G1/4	**541258**	**MS4-EM1-1/4[1)]**	**541259**	**MS4-EM1-1/4-S[1)]**
MS6	G1/4	**541271**	**MS6-EM1-1/4[1)]**	**541272**	**MS6-EM1-1/4-S[1)]**
	G3/8	**541275**	**MS6-EM1-3/8[1)]**	**541276**	**MS6-EM1-3/8-S[1)]**
	G1/2	**541267**	**MS6-EM1-1/2[1)]**	**541268**	**MS6-EM1-1/2-S[1)]**

1) Free of copper and PTFE

On-off valves MS4/MS6-EM1, MS series

Ordering data – Modular products

FESTO

M Mandatory data

Module No.	Series	Size		Function		Connection size
541266 541279	MS	4 6		EM1		1/8, 1/4, 3/8, 1/2 AGA, AGB, AGC, AGD, AGE
Order example						
541266	**MS**	**4**	**–**	**EM1**	**–**	**1/4**

Ordering table

Grid dimension [mm]	40	62	Condi-tions	Code		Enter code
M Module No.	**541266**	**541279**				
Series	Standard			**MS**		MS
Size	4	6		**...**		
Function	On-off valve, manual			**-EM1**		-EM1
Connection size	Thread G1/8	–		**-1/8**		
	Thread G1/4	Thread G1/4		**-1/4**		
	–	Thread G3/8		**-3/8**		
	–	Thread G1/2		**-1/2**		
	Connecting plate G1/8	–		**-AGA**		
	Connecting plate G1/4	Connecting plate G1/4		**-AGB**		
	Connecting plate G3/8	Connecting plate G3/8		**-AGC**		
	–	Connecting plate G1/2		**-AGD**		
	–	Connecting plate G3/4		**-AGE**		

Transfer order code

	MS		**–**	**EM1**	**–**	

On-off valves MS4/MS6-EM1, MS series

Ordering data – Modular products

FESTO

➔ 0 **Options**

	Silencer		Pressure gauge/adapter		Alternative pressure gauge scale		Type of mounting		Alternative flow direction
	S		AG, A8, A4, RG, AD1 ... AD4, AD7 ... AD10		PSI MPA		WP WPM WB WBM		Z
–	**S**	–	**AG**	–	**PSI**	–	**WB**	–	**Z**

Ordering table

Grid dimension [mm]		40	62	Conditions	Code		Enter code
0	Silencer	Silencer			**-S**		
	Pressure gauge/adapter	MS pressure gauge, bar (with adapter plate)	MS pressure gauge, bar		**-AG**		
		Adapter plate for EN pressure gauge ⅛, without pressure gauge	–		**-A8**		
		Adapter plate for EN pressure gauge ¼, without pressure gauge			**-A4**		
		Integrated pressure gauge, red-green scale			**-RG**		
		Pressure sensor with display, plug M8, 1 switching output PNP, 3-pin		1	**-AD1**		
		Pressure sensor with display, plug M8, 1 switching output NPN, 3-pin		1	**-AD2**		
		Pressure sensor with display, plug M12, 1 switching output PNP, 4-pin, analogue output 4 ... 20 mA		1	**-AD3**		
		Pressure sensor with display, plug M12, 1 switching output NPN, 4-pin, analogue output 4 ... 20 mA		1	**-AD4**		
		Pressure sensor without display, plug M8, threshold value comparator, PNP, N/O contact		1	**-AD7**		
		Pressure sensor without display, plug M8, threshold value comparator, PNP, N/C contact		1	**-AD8**		
		Pressure sensor without display, plug M8, window comparator, PNP, N/O contact		1	**-AD9**		
		Pressure sensor without display, plug M8, window comparator, PNP, N/C contact		1	**-AD10**		
	Alternative pressure gauge scale	psi		2	**-PSI**		
		MPa		2	**-MPA**		
	Type of mounting	Mounting bracket		3	**-WP**		
		Mounting bracket		3	**-WPM**		
		Mounting bracket			**-WB**		
		Mounting bracket	–		**-WBM**		
	Alternative flow direction	Flow direction from right to left			**-Z**		

1 **AD1 ... AD4, AD7 ... AD10** Measuring range max. 10 bar

2 **PSI, MPA** Only with pressure gauge AG or RG

3 **WP, WPM** Only with connecting plate AGA, AGB, AGC, AGD or AGE

Transfer order code

–		–		–		–		–	

On-off valves MS4/MS6-EE, MS series

Peripherals overview

FESTO

On-off valve MS4/MS6-EE

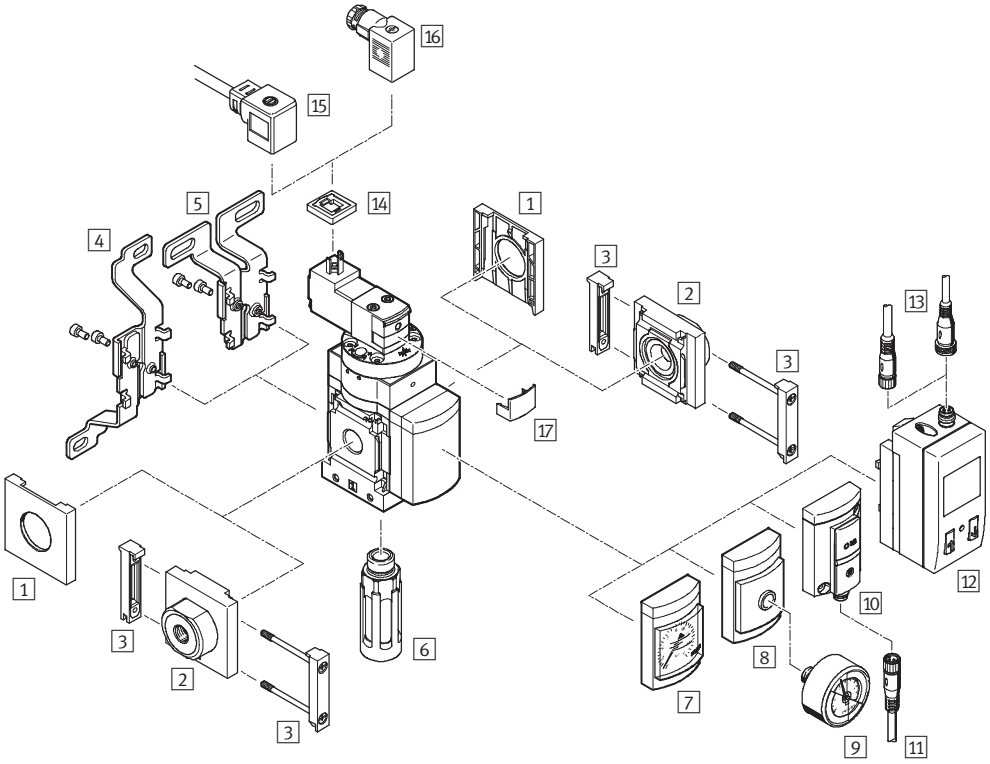

Note

Additional accessories:

- Module connector for combination with size MS4/MS6 or size MS9 ➔ Internet: amv, rmv, armv
- Adapter plate for mounting on profiles ➔ Internet: ipm-80, ipm-40-80, ipm-80-80

On-off valves MS4/MS6-EE, MS series

Peripherals overview

FESTO

Mounting attachments and accessories						
		Individual device		Combination		→ Page/Internet
		Without connecting plate	With connecting plate	Without connecting plate	With connecting plate	
1	Cover cap MS4/6-END	■	–	■	–	ms4-end, ms6-end
2	Connecting plate MS4/6-AG...	–	■	–	■	ms4-ag, ms6-ag
3	Module connector MS4/6-MV	–	■	■	■	ms4-mv, ms6-mv
4	Mounting bracket MS4/6-WB	■	■	–	–	ms4-wb, ms6-wb
5	Mounting bracket MS4-WBM	■	■	–	–	ms4-wbm
6	Silencer U	■	■	■	■	83
7	MS pressure gauge AG	■	■	■	■	28
8	Adapter plate for EN pressure gauge ⅛/¼ A8/A4	■	■	■	■	28
9	Pressure gauge MA	■	■	■	■	83
10	Pressure sensor without display AD7 ... AD10	■	■	■	■	28
11	Connecting cable NEBU-M8...-LE3	■	■	■	■	83
12	Pressure sensor with display AD1 ... AD4	■	■	■	■	28
13	Connecting cable NEBU-M8...-LE3/NEBU-M12...-LE4	■	■	■	■	83
14	Illuminating seal MEB-LD	■	■	■	■	82
15	Plug socket with cable KMEB	■	■	■	■	82
16	Plug socket MSSD-EB	■	■	■	■	82
17	Locking clip CPV18-HV	■	■	■	■	82
–	Mounting bracket MS4/6-WP/WPB/WPE/WPM	–	■	■	■	ms4-wp, ms6-wp

On-off valves MS4/MS6-EE, MS series

Type codes

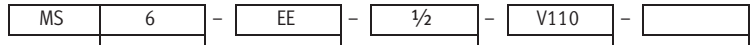

Series	
MS	Standard service unit

Size	
4	Grid dimension 40 mm
6	Grid dimension 62 mm

Service function	
EE	Solenoid actuated on-off valve

Connection size	
MS4	
⅛	Thread G⅛
¼	Thread G¼
MS6	
¼	Thread G¼
⅜	Thread G⅜
½	Thread G½

Supply voltage	
10V24	Supply voltage 24 V DC
V110	Supply voltage 110 V AC
V230	Supply voltage 230 V AC

Silencer	
	Without silencer
S	Silencer

Additional variants can be ordered using the modular system ➔ 28

- Connecting plates
- Supply voltage
- Pressure gauge alternatives
- Alternative pressure gauge scale
- Type of mounting
- Alternative flow direction

On-off valves MS4/MS6-EE, MS series

Technical data

FESTO

Function

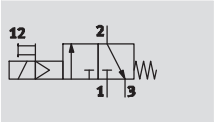

Flow rate
1,000 ... 7,000 l/min

Temperature range
–10 ... +60 °C

Operating pressure
4 ... 18 bar

- Solenoid actuated on-off valve for pressurising and venting pneumatic installations
- With solenoid coil without plug socket
- Three voltage ranges can be selected
- Ducted exhaust possible via a threaded connection with silencer
- Non-detenting and detenting manual override (variant 10V24: only non-detenting)
- Solenoid actuator can be repositioned by 180°
- Optional pressure sensor

General technical data						
Size		MS4		MS6		
Pneumatic connection 1, 2		G⅛	G¼	G¼	G⅜	G½
Pneumatic connection 3		G¼		G½		
Design		Piston spool valve				
Type of mounting		Via accessories				
		In-line installation				
Assembly position		Any				
Pressure indicator		Via pressure sensor for displaying output pressure via LCD display and electrical output				
		Via pressure sensor for displaying output pressure via operational status indicator and electrical output				
		Via pressure gauge for displaying output pressure				
Valve function		3/2-way valve, single solenoid, closed				
Exhaust function		Without flow control				
Type of reset		Mechanical spring				
Switching position display		Via accessories				
Pilot control mode		Direct				
Pilot air supply		Internal				
Direction of flow		Non-reversible				
C value	[l/(s*bar)]	4.5	9.5	11.0	22.0	29.0
b value		0.5	0.44	0.5	0.5	0.4

Note: This product conforms to ISO 1179-1 and to ISO 228-1

Electrical data			
Size		MS4	MS6
Coil characteristics	V24	24 V DC	
	10V24	24 V DC	
	V110	110 V AC	
	V230	230 V AC	
Electrical connection		Plug, square design to EN 175301-803, type C	
Protection class solenoid coil		IP65	
Duty cycle	[%]	100	

On-off valves MS4/MS6-EE, MS series

Technical data

Standard nominal flow rate qnN[1] [l/min]					
Size	MS4		MS6		
Pneumatic connection	G⅛	G¼	G¼	G⅜	G½
In main flow direction 1 → 2	1,000	2,000	2,600	5,500	7,000
In relief direction 2 → 3	1,600	1,600	7,000	6,200	5,500

1) Measured at p1 = 6 bar and p2 = 5 bar, Δp = 1 bar

Operating and environmental conditions							
Variant		Coil parameter V24, V110, V230		Coil parameter 10V24		Pressure sensor AD...	
Size		MS4	MS6	MS4	MS6	MS4	MS6
Operating pressure	[bar]	4 ... 14 (4 ... 10 with silencer S)	4 ... 18 (4 ... 10 with silencer S)	4 ... 10	4 ... 10	4 ... 10	4 ... 10
Operating medium		Compressed air				Filtered compressed air, lubricated or unlubricated, grade of filtration 40 µm	
Ambient temperature	[°C]	–10 ... +60	–10 ... +60	–10 ... +50	–10 ... +50	0 ... +50	0 ... +50
Temperature of medium	[°C]	–10 ... +60	–10 ... +60	–10 ... +50	–10 ... +50	0 ... +50	0 ... +50
Corrosion resistance	CRC[1]	2					

1) Corrosion resistance class 2 according to Festo standard 940 070
Components requiring moderate corrosion resistance. Externally visible parts with primarily decorative surface requirements which are in direct contact with a normal industrial environment or media such as coolants or lubricating agents.

Weights [g]		
Size	MS4	MS6
On-off valve	273	740
On-off valve with silencer S	289	816

Materials

Sectional view

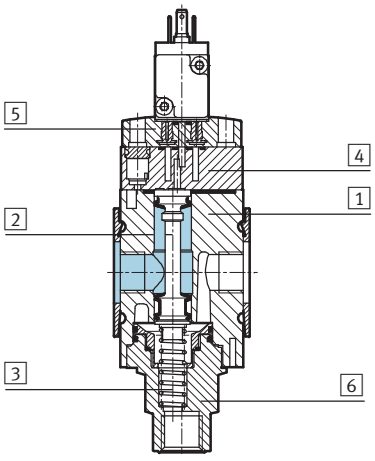

On-off valve		
1	Body	Die-cast aluminium
2	Piston spool	Nitrile rubber/aluminium
3	Springs	High-alloy stainless steel
4	End cap	Polyamide
5	Top plate	Polyamide
6	Socket end connection	Polyamide
–	Seals	Nitrile rubber
	Note on materials	Free of copper and PTFE (not with variants AG, 10V24 or AD...)

On-off valves MS4/MS6-EE, MS series

Technical data

FESTO

Dimensions – Basic version

Download CAD data ➔ **www.festo.com**

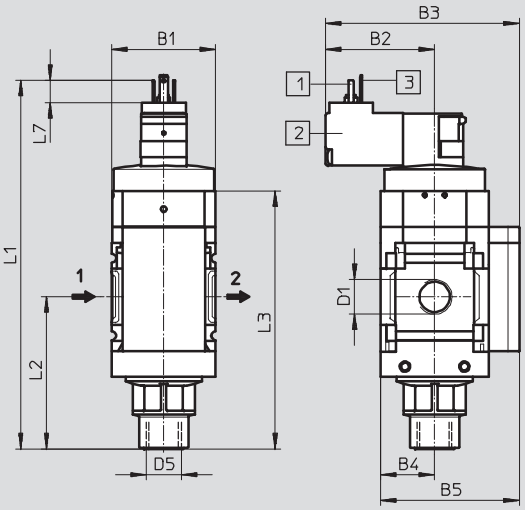

Supply voltage V24/V110/V230

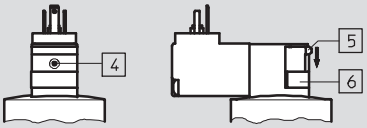

Supply voltage 10V24

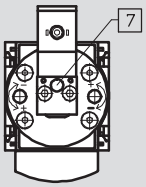

Note

For detenting manual override remove the grey cover plate 6 and press the slide 5 downwards.

1 Plug connection to EN 175301-803
2 Solenoid actuator can be repositioned by 180°, i.e. solenoid points to the front
3 PIN only with solenoid actuators 110 V and 230 V
4 Manual override, non-detenting (delivery status)
5 Slide
6 Cover plate
7 Manual override, only non-detenting

➔ Flow direction

Type	B1	B2		B3		B4	B5	D1	D5	L1		L2	L3	L7
		10V24	V24/ V110/ V230	10V24	V24/ V110/ V230					10V24	V24/ V110/ V230			
MS4-EE-⅛	40	34.9	42.2	67.9	75.2	21	54	G⅛	G¼	140.4	142.8	58.9	100	8.6
MS4-EE-¼								G¼						
MS6-EE-¼	62	44.7	52	89.7	97	31	76	G¼	G½	183.2	185.6	84	143	8.6
MS6-EE-⅜								G⅜						
MS6-EE-½								G½						

Note: This product conforms to ISO 1179-1 and to ISO 228-1

On-off valves MS4/MS6-EE, MS series

Technical data

FESTO

Dimensions – Pressure gauge alternatives

Download CAD data ➔ **www.festo.com**

Integrated MS pressure gauge with standard scale AG or red-green scale RG, display unit [bar]

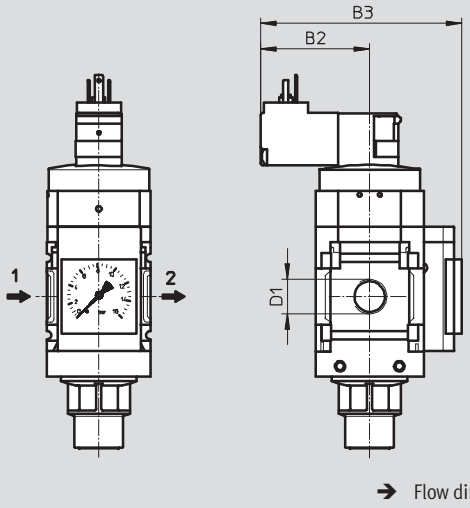

➔ Flow direction

Adapter plate A8/A4 for EN pressure gauge ⅛/¼, without pressure gauge

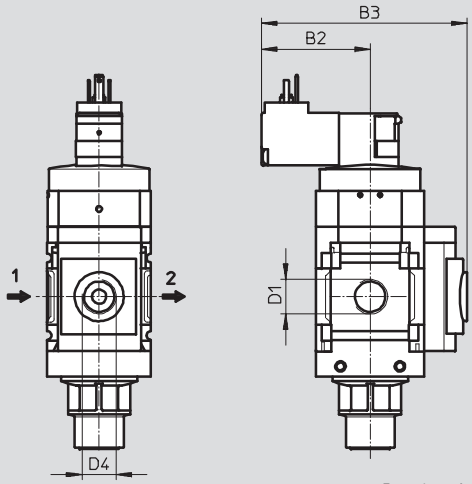

➔ Flow direction

Type	B2		B3		D1	D4
	10V24	V24/V110/V230	10V24	V24/V110/V230		
MS4-EE-⅛-...-AG	34.9	42.2	78.9	86.2	G⅛	–
MS4-EE-¼-...-AG					G¼	
MS4-EE-⅛-...-RG	34.9	42.2	80.4	87.7	G⅛	–
MS4-EE-¼-...-RG					G¼	
MS4-EE-⅛-...-A8	34.9	42.2	72.4	79.7	G⅛	G⅛
MS4-EE-¼-...-A8					G¼	
MS4-EE-⅛-...-A4	34.9	42.2	72.4	79.7	G⅛	G¼
MS4-EE-¼-...-A4					G¼	
MS6-EE-¼-...-AG	44.7	52	98.7	106	G¼	–
MS6-EE-⅜-...-AG					G⅜	
MS6-EE-½-...-AG					G½	
MS6-EE-¼-...-RG	44.7	52	100.2	107.5	G¼	–
MS6-EE-⅜-...-RG					G⅜	
MS6-EE-½-...-RG					G½	
MS6-EE-¼-...-A4	44.7	52	92.3	99.6	G¼	G¼
MS6-EE-⅜-...-A4					G⅜	
MS6-EE-½-...-A4					G½	

Note: This product conforms to ISO 1179-1 and to ISO 228-1

On-off valves MS4/MS6-EE, MS series

Technical data

FESTO

Dimensions – Pressure gauge alternatives Download CAD data ➔ **www.festo.com**

Pressure sensor with LCD display AD1 ... AD4 Technical data ➔ Internet: sde1

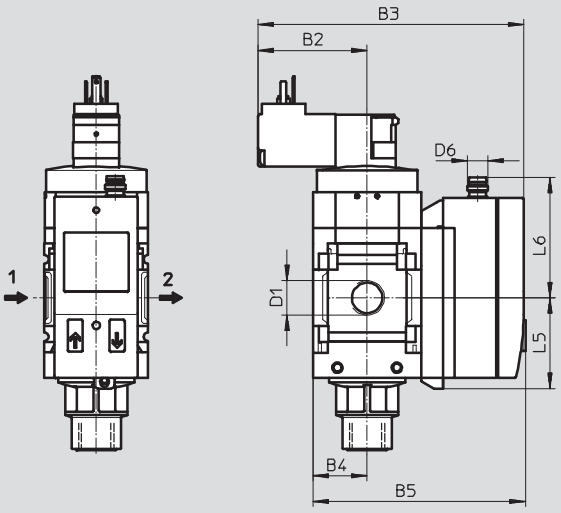

➔ Flow direction

Variant AD1:
SDE1-D10-G2-MS-L-P1-M8 with 3-pin plug M8x1, 1 switching output PNP

Variant AD2:
SDE1-D10-G2-MS-L-N1-M8 with 3-pin plug M8x1, 1 switching output NPN

Variant AD3:
SDE1-D10-G2-MS-L-PI-M12 with 4-pin plug M12x1, 1 switching output PNP and 4 ... 20 mA analogue

Variant AD4:
SDE1-D10-G2-MS-L-NI-M12 with 4-pin plug M12x1, 1 switching output NPN and 4 ... 20 mA analogue

Type	B2		B3		B4	B5	D1	D6	L5	L6
	10V24	V24/ V110/ V230	10V24	V24/ V110/ V230						
MS4-EE-⅛-...-AD1/AD2	34.9	42.2	96.5	103.8	21	82.6	G⅛	M8x1	35.1	46.7
MS4-EE-¼-...-AD1/AD2							G¼			
MS4-EE-⅛-...-AD3/AD4	34.9	42.2	96.5	103.8	21	82.6	G⅛	M12x1	35.1	55.8
MS4-EE-¼-...-AD3/AD4							G¼			
MS6-EE-¼-...-AD1/AD2	44.7	52	116.7	124	31	103	G¼	M8x1	35.1	46.7
MS6-EE-⅜-...-AD1/AD2							G⅜			
MS6-EE-½-...-AD1/AD2							G½			
MS6-EE-¼-...-AD3/AD4	44.7	52	116.7	124	31	103	G¼	M12x1	35.1	55.8
MS6-EE-⅜-...-AD3/AD4							G⅜			
MS6-EE-½-...-AD3/AD4							G½			

Note: This product conforms to ISO 1179-1 and to ISO 228-1

On-off valves MS4/MS6-EE, MS series

Technical data

FESTO

Dimensions – Pressure gauge alternatives Download CAD data ➔ **www.festo.com**

Pressure sensor without LCD display (operational status indicator only) AD7 ... AD10 Technical data ➔ Internet: sde5

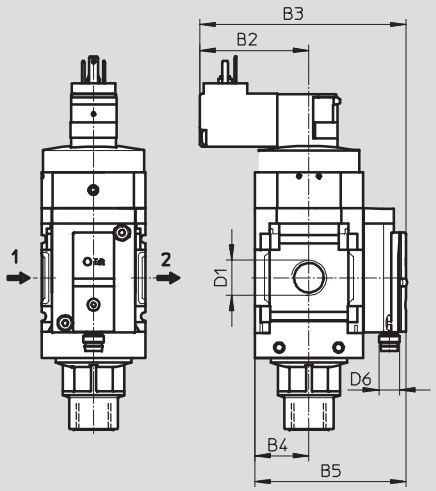

➔ Flow direction

Variant AD7:
SDE5-D10-O-...-P-M8 with 3-pin plug M8x1, threshold value comparator, 1 switching output PNP, N/O contact

Variant AD8:
SDE5-D10-C-...-P-M8 with 3-pin plug M8x1, threshold value comparator, 1 switching output PNP, N/C contact

Variant AD9:
SDE5-D10-O3-...-P-M8 with 3-pin plug M8x1, window comparator, 1 switching output PNP, N/O contact

Variant AD10:
SDE5-D10-C3-...-P-M8 with 3-pin plug M8x1, window comparator, 1 switching output PNP, N/C contact

Type	B2		B3		B4	B5	D1	D6
	10V24	V24/ V110/ V230	10V24	V24/ V110/ V230				
MS4-EE-⅛-...-AD7/AD8/AD9/AD10	34.9	42.2	73	80.3	21	59.1	G⅛	M8x1
MS4-EE-¼-...-AD7/AD8/AD9/AD10							G¼	
MS6-EE-¼-...-AD7/AD8/AD9/AD10	44.7	52	92.9	100.2	31	79	G¼	M8x1
MS6-EE-⅜-...-AD7/AD8/AD9/AD10							G⅜	
MS6-EE-½-...-AD7/AD8/AD9/AD10							G½	

Note: This product conforms to ISO 1179-1 and to ISO 228-1

On-off valves MS4/MS6-EE, MS series

Technical data

FESTO

Dimensions – Silencer Download CAD data ➔ **www.festo.com**

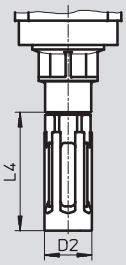

Type	D2	L4
MS4-EE-...-S	19.5	48.5
MS6-EE-...-S	28	106

Ordering data

Size	Connection	Without silencer		With silencer	
		Part No.	Type	Part No.	Type
Supply voltage 24 V DC					
MS4	G1/8	**542580**	**MS4-EE-1/8-10V24**	**542600**	**MS4-EE-1/8-10V24-S**
	G1/4	**542578**	**MS4-EE-1/4-10V24**	**542598**	**MS4-EE-1/4-10V24-S**
MS6	G1/4	**542584**	**MS6-EE-1/4-10V24**	**542604**	**MS6-EE-1/4-10V24-S**
	G3/8	**542586**	**MS6-EE-3/8-10V24**	**542606**	**MS6-EE-3/8-10V24-S**
	G1/2	**542582**	**MS6-EE-1/2-10V24**	**542602**	**MS6-EE-1/2-10V24-S**
Supply voltage 110 V AC					
MS4	G1/8	**529541**	**MS4-EE-1/8-V110**[1)]	**538725**	**MS4-EE-1/8-V110-S**[1)]
	G1/4	**529535**	**MS4-EE-1/4-V110**[1)]	**538719**	**MS4-EE-1/4-V110-S**[1)]
MS6	G1/4	**529829**	**MS6-EE-1/4-V110**[1)]	**538737**	**MS6-EE-1/4-V110-S**[1)]
	G3/8	**529835**	**MS6-EE-3/8-V110**[1)]	**538743**	**MS6-EE-3/8-V110-S**[1)]
	G1/2	**529823**	**MS6-EE-1/2-V110**[1)]	**538731**	**MS6-EE-1/2-V110-S**[1)]
Supply voltage 230 V AC					
MS4	G1/8	**529543**	**MS4-EE-1/8-V230**[1)]	**538727**	**MS4-EE-1/8-V230-S**[1)]
	G1/4	**529537**	**MS4-EE-1/4-V230**[1)]	**538721**	**MS4-EE-1/4-V230-S**[1)]
MS6	G1/4	**529831**	**MS6-EE-1/4-V230**[1)]	**538739**	**MS6-EE-1/4-V230-S**[1)]
	G3/8	**529837**	**MS6-EE-3/8-V230**[1)]	**538745**	**MS6-EE-3/8-V230-S**[1)]
	G1/2	**529825**	**MS6-EE-1/2-V230**[1)]	**538733**	**MS6-EE-1/2-V230-S**[1)]

1) Free of copper and PTFE

On-off valves MS4/MS6-EE, MS series

Ordering data – Modular products

FESTO

M Mandatory data →

Module No.	Series	Size		Function		Connection size		Supply voltage	
527709 527682	MS	4 6		EE		⅛, ¼, ⅜, ½, AGA, AGB, AGC, AGD, AGE		V24 10V24 V110 V230	
Order example									
527709	**MS**	**4**	**–**	**EE**	**–**	**AGB**	**–**	**V24**	**–**

Ordering table

Grid dimension [mm]		40	62	Condi-tions	Code		Enter code
M	Module No.	**527709**	**527682**				
	Series	Standard			**MS**		MS
	Size	4	6		**...**		
	Function	On-off valve, electrical			**-EE**		-EE
	Connection size	Thread G⅛	–		**-⅛**		
		Thread G¼	Thread G¼		**-¼**		
		–	Thread G⅜		**-⅜**		
		–	Thread G½		**-½**		
		Connecting plate G⅛	–		**-AGA**		
		Connecting plate G¼	Connecting plate G¼		**-AGB**		
		Connecting plate G⅜	Connecting plate G⅜		**-AGC**		
		–	Connecting plate G½		**-AGD**		
		–	Connecting plate G¾		**-AGE**		
	Supply voltage	24 V DC (pin allocation to EN 175301) 4 ... 14 bar	4 ... 18 bar		**-V24**		
		24 V DC (pin allocation to EN 175301) 4 ... 10 bar	4 ... 10 bar	1	**-10V24**		
		110 V AC (pin allocation to EN 175301) 4 ... 14 bar	4 ... 18 bar		**-V110**		
↓		230 V AC (pin allocation to EN 175301) 4 ... 14 bar	4 ... 18 bar		**-V230**		

1 **10V24** Max. supply pressure 10 bar

Transfer order code

	MS		–	EE	–		–	

On-off valves MS4/MS6-EE, MS series

Ordering data – Modular products

FESTO

➔ 0 **Options**

	Silencer		Pressure gauge/adapter		Alternative pressure gauge scale		Type of mounting		Alternative flow direction
	S		AG, A8, A4, RG, AD1, AD2, AD3, AD4, AD7, AD8, AD9, AD10		PSI MPA		WP WPM WB WBM		Z
–	**S**	–	**AG**	–	**PSI**	–	**WP**	–	**Z**

Ordering table

Grid dimension [mm]		40	62	Conditions	Code		Enter code
0	Silencer	Silencer			**-S**		
	Pressure gauge/adapter	MS pressure gauge (with adapter plate)	MS pressure gauge		**-AG**		
		Adapter plate for EN pressure gauge 1/8, without pressure gauge	–		**-A8**		
		Adapter plate for EN pressure gauge 1/4, without pressure gauge			**-A4**		
		Integrated pressure gauge, red-green scale			**-RG**		
		Pressure sensor with display, plug M8, 1 switching output PNP, 3-pin		2	**-AD1**		
		Pressure sensor with display, plug M8, 1 switching output NPN, 3-pin		2	**-AD2**		
		Pressure sensor with display, plug M12, 1 switching output PNP, 4-pin, analogue output 4 ... 20 mA		2	**-AD3**		
		Pressure sensor with display, plug M12, 1 switching output NPN, 4-pin, analogue output 4 ... 20 mA		2	**-AD4**		
		Pressure sensor without display, plug M8, threshold value comparator, PNP, N/O contact		2	**-AD7**		
		Pressure sensor without display, plug M8, threshold value comparator, PNP, N/C contact		2	**-AD8**		
		Pressure sensor without display, plug M8, window comparator, PNP, N/O contact		2	**-AD9**		
		Pressure sensor without display, plug M8, window comparator, PNP, N/C contact		2	**-AD10**		
	Alternative pressure gauge scale	psi		3	**-PSI**		
		MPa		3	**-MPA**		
	Type of mounting	Mounting bracket		4	**-WP**		
		Mounting bracket		4	**-WPM**		
		Mounting bracket			**-WB**		
		Mounting bracket	–		**-WBM**		
	Alternative flow direction	Flow direction from right to left			**-Z**		

2 **AD1 ... AD4, AD7 ... AD10** Measuring range max. 10 bar

3 **PSI, MPA** Only in combination with pressure gauge AG or RG

4 **WP, WPM** Only with connecting plate AGA, AGB, AGC, AGD or AGE

Transfer order code

–		–		–		–		–	

Soft-start valves MS4/MS6-DL, MS series

Peripherals overview

FESTO

Soft-start valve MS4/MS6-DL

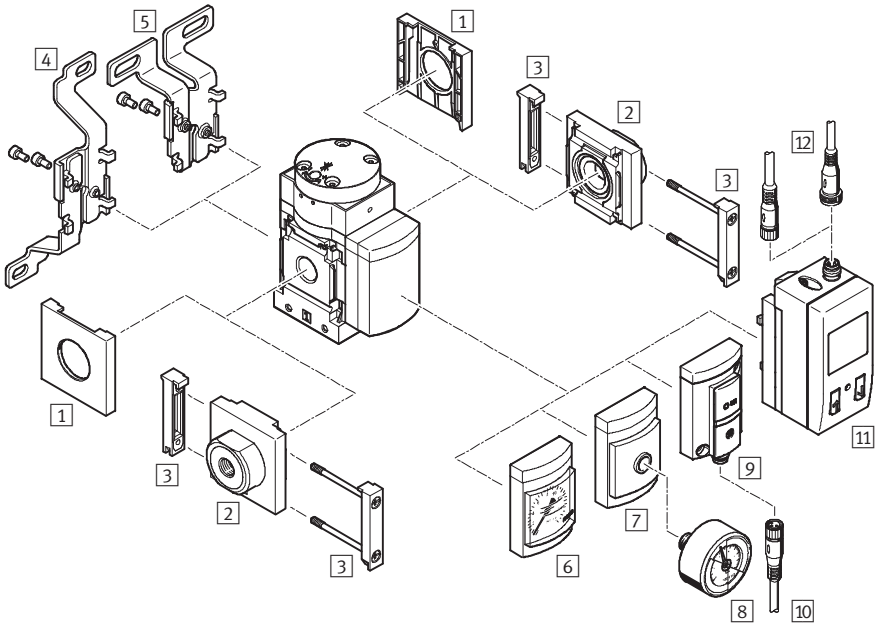

Note

Additional accessories:
- Module connector for combination with size MS4/MS6 or size MS9 ➔ Internet: amv, rmv, armv
- Adapter plate for mounting on profiles ➔ Internet: ipm-80, ipm-40-80, ipm-80-80

Mounting attachments and accessories

		Individual device		Combination		➔ Page/Internet
		Without connecting plate	With connecting plate	Without connecting plate	With connecting plate	
1	Cover cap MS4/6-END	■	–	■	–	ms4-end, ms6-end
2	Connecting plate MS4/6-AG...	–	■	–	■	ms4-ag, ms6-ag
3	Module connector MS4/6-MV	–	■	■	■	ms4-mv, ms6-mv
4	Mounting bracket MS4/6-WB	■	■	–	–	ms4-wb, ms6-wb
5	Mounting bracket MS4-WBM	■	■	–	–	ms4-wbm
6	MS pressure gauge AG	■	■	■	■	36
7	Adapter plate for EN pressure gauge 1/8/1/4 A8/A4	■	■	■	■	36
8	Pressure gauge MA	■	■	■	■	83
9	Pressure sensor without display AD7 ... AD10	■	■	■	■	36
10	Connecting cable NEBU-M8...-LE3	■	■	■	■	83
11	Pressure sensor with display AD1 ... AD4	■	■	■	■	36
12	Connecting cable NEBU-M8...-LE3/NEBU-M12...-LE4	■	■	■	■	83
–	Mounting bracket MS4/6-WP/WPB/WPE/WPM	–	■	■	■	ms4-wp, ms6-wp

Soft-start valves MS4/MS6-DL, MS series

FESTO

Type codes

MS	6	–	DL	–	½

Series	
MS	Standard service unit

Size	
4	Grid dimension 40 mm
6	Grid dimension 62 mm

Service function	
DL	Pneumatically actuated soft-start valve

Connection size	
MS4	
⅛	Thread G⅛
¼	Thread G¼
MS6	
¼	Thread G¼
⅜	Thread G⅜
½	Thread G½

Additional variants can be ordered using the modular system ➔ 36

- Connecting plates
- Pressure gauge alternatives
- Alternative pressure gauge scale
- Type of mounting
- Alternative flow direction

Soft-start valves MS4/MS6-DL, MS series

Technical data

FESTO

Function

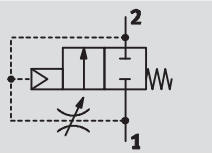

Flow rate
1,000 ... 6,450 l/min

Temperature range
–10 ... +60 °C

Operating pressure
4 ... 18 bar

The duration of the pressure build-up is adjusted using the restrictor attached to the valve cap.

The output pressure p2 rises slowly in accordance with the restrictor setting. The main seat opens when the switch-through pressure is reached.

- Pneumatically actuated soft-start valve for slowly pressurising and venting pneumatic installations (for use with on-off valves EM1 and EE)
- The drives advance slowly and reliably into the initial position
- Sudden and erratic movements are avoided
- Pressure switching approx. 50% of input pressure
- Adjustable switching time delay
- Optional pressure sensor

General technical data						
Size		MS4		MS6		
Pneumatic connection 1, 2		G⅛	G¼	G¼	G⅜	G½
Design		Piston poppet valve				
Type of mounting		Via accessories				
		In-line installation				
Assembly position		Any				
Pressure indicator		Via pressure sensor for displaying output pressure via LCD display and electrical output				
		Via pressure sensor for displaying output pressure via operational status indicator and electrical output				
		Via pressure gauge for displaying output pressure				
Valve function		2/2-way valve				
Exhaust function		Flow control				
Type of reset		Mechanical spring				
Pilot control mode		Direct				
Pilot air supply		External				
Direction of flow		Non-reversible				
C value	[l/(s*bar)]	4.6	9.6	11.22	21.05	28.97
b value		0.5	0.45	0.54	0.48	0.39

Note: This product conforms to ISO 1179-1 and to ISO 228-1

Standard nominal flow rate qnN[1] [l/min]					
Size	MS4		MS6		
Pneumatic connection	G⅛	G¼	G¼	G⅜	G½
In main flow direction 1 → 2	1,000	2,000	2,800	5,050	6,450
In relief direction 2 → 1	1,000	2,000	2,800	5,050	6,400

1) Measured at p1 = 6 bar and p2 = 5 bar, Δp = 1 bar

Soft-start valves MS4/MS6-DL, MS series

Technical data

FESTO

Operating and environmental conditions					
Variant		Standard		Pressure sensor AD...	
Size		MS4	MS6	MS4	MS6
Operating pressure	[bar]	4 ... 14	4 ... 18	4 ... 10	4 ... 10
Operating medium		Compressed air		Filtered compressed air, lubricated or unlubricated, grade of filtration 40 µm	
Ambient temperature	[°C]	–10 ... +60	–10 ... +60	0 ... +50	0 ... +50
Temperature of medium	[°C]	–10 ... +60	–10 ... +60	0 ... +50	0 ... +50
Corrosion resistance	CRC[1)]	2			

1) Corrosion resistance class 2 according to Festo standard 940 070
Components requiring moderate corrosion resistance. Externally visible parts with primarily decorative surface requirements which are in direct contact with a normal industrial environment or media such as coolants or lubricating agents.

Weights [g]		
Size	MS4	MS6
Soft-start valve	213	650

Materials

Sectional view

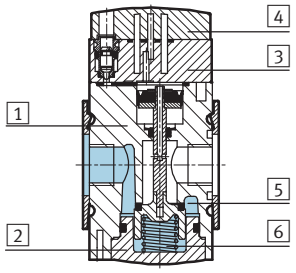

Soft-start valve		
1	Body	Die-cast aluminium
2	Base	Polyester
3	End cap	Polyamide
4	Top plate	Polyamide
5	Seat	Die-cast aluminium
6	Springs	Spring steel
–	Seals	Nitrile rubber
Note on materials		RoHS-compliant (for MS4 only)
		Free of copper and PTFE (not with variants AG or AD...)

Switching point – Pressure p as a function of time t

MS4

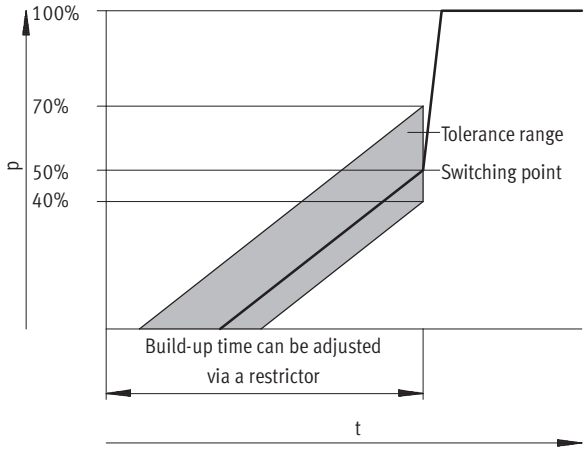

MS6

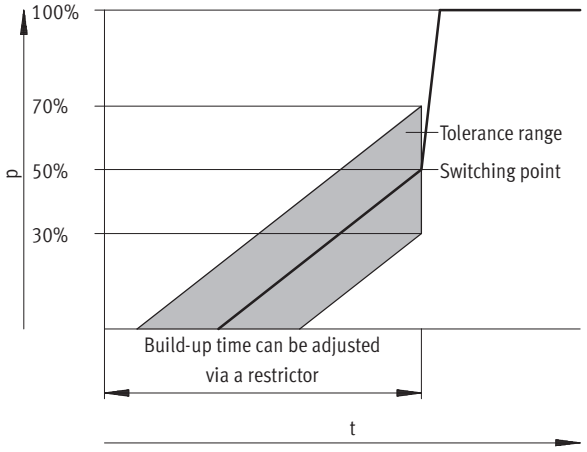

Note

The tolerance specification +20%/–10% of the switching point refers to the operating pressure p1.

Example: at an operating pressure of 4 bar a switching point of 1.6 bar to 2.8 bar is permitted.

Note

The tolerance specification +20%/–20% of the switching point refers to the operating pressure p1.

Example: at an operating pressure of 4 bar a switching point of 1.2 bar to 2.8 bar is permitted.

Soft-start valves MS4/MS6-DL, MS series

Technical data

FESTO

Dimensions – Standard Download CAD data ➔ **www.festo.com**

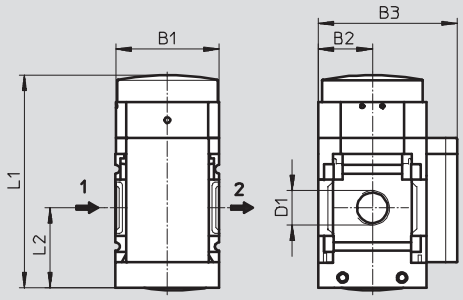

➔ Flow direction

Type	B1	B2	B3	D1	L1	L2
MS4-DL-⅛	40	21	54	G⅛	82.7	31
MS4-DL-¼				G¼		
MS6-DL-¼	62	31	76	G¼	116	45
MS6-DL-⅜				G⅜		
MS6-DL-½				G½		

Note: This product conforms to ISO 1179-1 and to ISO 228-1

Dimensions – Pressure gauge alternatives Download CAD data ➔ **www.festo.com**

Integrated MS pressure gauge with standard scale AG or red-green scale RG, display unit [bar]

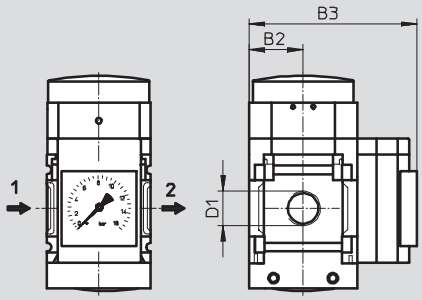

➔ Flow direction

Adapter plate A8/A4 for EN pressure gauge ⅛/¼, without pressure gauge

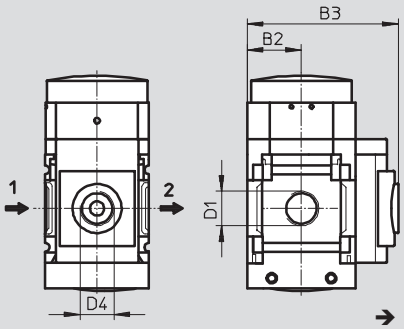

➔ Flow direction

Type	B2	B3	D1	D4
MS4-DL-⅛-...-AG	21	65	G⅛	–
MS4-DL-¼-...-AG			G¼	
MS4-DL-⅛-...-RG	21	66.5	G⅛	–
MS4-DL-¼-...-RG			G¼	
MS4-DL-⅛-...-A8	21	58.5	G⅛	G⅛
MS4-DL-¼-...-A8			G¼	
MS4-DL-⅛-...-A4	21	58.5	G⅛	G¼
MS4-DL-¼-...-A4			G¼	
MS6-DL-¼-...-AG	31	85	G¼	–
MS6-DL-⅜-...-AG			G⅜	
MS6-DL-½-...-AG			G½	
MS6-DL-¼-...-RG	31	86.5	G¼	–
MS6-DL-⅜-...-RG			G⅜	
MS6-DL-½-...-RG			G½	
MS6-DL-¼-...-A4	31	78.5	G¼	G¼
MS6-DL-⅜-...-A4			G⅜	
MS6-DL-½-...-A4			G½	

Note: This product conforms to ISO 1179-1 and to ISO 228-1

Soft-start valves MS4/MS6-DL, MS series

Technical data

FESTO

Dimensions – Pressure gauge alternatives Download CAD data ➔ **www.festo.com**

Pressure sensor with LCD display AD1 ... AD4 Technical data ➔ Internet: sde1

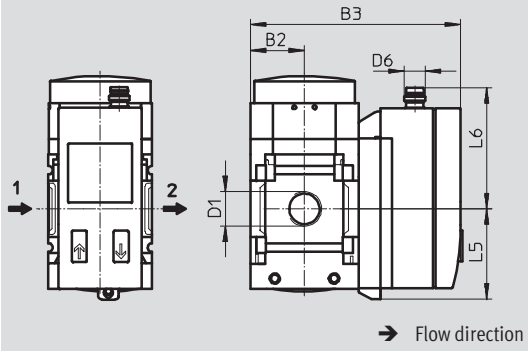

➔ Flow direction

Variant AD1:
SDE1-D10-G2-MS-L-P1-M8 with 3-pin plug M8x1, 1 switching output PNP

Variant AD2:
SDE1-D10-G2-MS-L-N1-M8 with 3-pin plug M8x1, 1 switching output NPN

Variant AD3:
SDE1-D10-G2-MS-L-PI-M12 with 4-pin plug M12x1, 1 switching output PNP and 4 ... 20 mA analogue

Variant AD4:
SDE1-D10-G2-MS-L-NI-M12 with 4-pin plug M12x1, 1 switching output NPN and 4 ... 20 mA analogue

Pressure sensor without LCD display (operational status indicator only) AD7 ... AD10 Technical data ➔ Internet: sde5

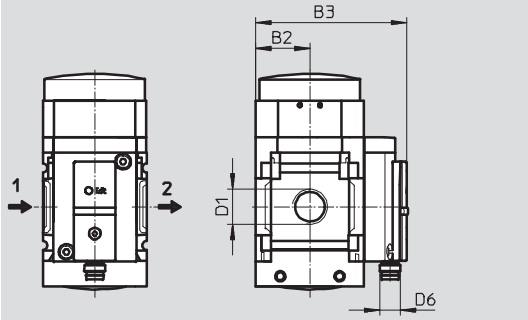

➔ Flow direction

Variant AD7:
SDE5-D10-O-...-P-M8 with 3-pin plug M8x1, threshold value comparator, 1 switching output PNP, N/O contact

Variant AD8:
SDE5-D10-C-...-P-M8 with 3-pin plug M8x1, threshold value comparator, 1 switching output PNP, N/C contact

Variant AD9:
SDE5-D10-O3-...-P-M8 with 3-pin plug M8x1, window comparator, 1 switching output PNP, N/O contact

Variant AD10:
SDE5-D10-C3-...-P-M8 with 3-pin plug M8x1, window comparator, 1 switching output PNP, N/C contact

Type	B2	B3	D1	D6	L5	L6
MS4-DL-⅛-...-AD1/AD2	21	82.6	G⅛	M8x1	35.1	46.7
MS4-DL-¼-...-AD1/AD2			G¼			
MS4-DL-⅛-...-AD3/AD4	21	82.6	G⅛	M12x1	35.1	55.8
MS4-DL-¼-...-AD3/AD4			G¼			
MS4-DL-⅛-...-AD7/AD8/AD9/AD10	21	59.1	G⅛	M8x1	–	–
MS4-DL-¼-...-AD7/AD8/AD9/AD10			G¼			
MS6-DL-¼-...-AD1/AD2	31	103	G¼	M8x1	35.1	46.7
MS6-DL-⅜-...-AD1/AD2			G⅜			
MS6-DL-½-...-AD1/AD2			G½			
MS6-DL-¼-...-AD3/AD4	31	103	G¼	M12x1	35.1	55.8
MS6-DL-⅜-...-AD3/AD4			G⅜			
MS6-DL-½-...-AD3/AD4			G½			
MS6-DL-¼-...-AD7/AD8/AD9/AD10	31	79	G¼	M8x1	–	–
MS6-DL-⅜-...-AD7/AD8/AD9/AD10			G⅜			
MS6-DL-½-...-AD7/AD8/AD9/AD10			G½			

Note: This product conforms to ISO 1179-1 and to ISO 228-1

Ordering data

Size	Connection	Part No.	Type
MS4	G⅛	**529533**	**MS4-DL-⅛**[1)]
	G¼	**529531**	**MS4-DL-¼**[1)]
MS6	G¼	**529819**	**MS6-DL-¼**[1)]
	G⅜	**529821**	**MS6-DL-⅜**[1)]
	G½	**529817**	**MS6-DL-½**[1)]

1) Free of copper and PTFE

Soft-start valves MS4/MS6-DL, MS series

Ordering data – Modular products

FESTO

M Mandatory data

Module No.	Series	Size		Function		Connection size
527711 527684	MS	4 6		DL		1/8, 1/4, 3/8, 1/2 AGA, AGB, AGC, AGD, AGE
Order example						
527711	**MS**	**4**	**–**	**DL**	**–**	**AGA**

Ordering table

Grid dimension [mm]	40	62	Condi-tions	Code		Enter code
M Module No.	**527711**	**527684**				
Series	Standard			**MS**		MS
Size	4	6		**...**		
Function	Soft-start valve, pneumatic			**-DL**		-DL
Connection size	Thread G1/8	–		**-1/8**		
	Thread G1/4	Thread G1/4		**-1/4**		
	–	Thread G3/8		**-3/8**		
	–	Thread G1/2		**-1/2**		
	Connecting plate G1/8	–		**-AGA**		
	Connecting plate G1/4	Connecting plate G1/4		**-AGB**		
	Connecting plate G3/8	Connecting plate G3/8		**-AGC**		
	–	Connecting plate G1/2		**-AGD**		
	–	Connecting plate G3/4		**-AGE**		

Transfer order code

	MS		**–**	**DL**	**–**	

Soft-start valves MS4/MS6-DL, MS series

Ordering data – Modular products

FESTO

➔ 0 **Options**

Pressure gauge/adapter	Alternative pressure gauge scale	Type of mounting	Alternative flow direction
AG, A8, A4, RG, AD1 ... AD4, AD7 ... AD10	PSI MPA	WP WPM WB WBM	Z
– **AG**	– **PSI**	– **WB**	– **Z**

Ordering table

Grid dimension [mm]		40	62	Conditions	Code		Enter code
0	Pressure gauge/adapter	MS pressure gauge, bar (with adapter plate)	MS pressure gauge, bar		-AG		
		Adapter plate for EN pressure gauge ⅛, without pressure gauge	–		-A8		
		Adapter plate for EN pressure gauge ¼, without pressure gauge			-A4		
		Integrated pressure gauge, red-green scale			-RG		
		Pressure sensor with display, plug M8, 1 switching output PNP, 3-pin		1	-AD1		
		Pressure sensor with display, plug M8, 1 switching output NPN, 3-pin		1	-AD2		
		Pressure sensor with display, plug M12, 1 switching output PNP, 4-pin, analogue output 4 ... 20 mA		1	-AD3		
		Pressure sensor with display, plug M12, 1 switching output NPN, 4-pin, analogue output 4 ... 20 mA		1	-AD4		
		Pressure sensor without display, plug M8, threshold value comparator, PNP, N/O contact		1	-AD7		
		Pressure sensor without display, plug M8, threshold value comparator, PNP, N/C contact		1	-AD8		
		Pressure sensor without display, plug M8, window comparator, PNP, N/O contact		1	-AD9		
		Pressure sensor without display, plug M8, window comparator, PNP, N/C contact		1	-AD10		
	Alternative pressure gauge scale	psi		2	-PSI		
		MPa		2	-MPA		
	Type of mounting	Mounting bracket		3	-WP		
		Mounting bracket		3	-WPM		
		Mounting bracket			-WB		
		Mounting bracket	–		-WBM		
	Alternative flow direction	Flow direction from right to left			-Z		

1 **AD1 ... AD4, AD7 ... AD10** Measuring range max. 10 bar

2 **PSI, MPA** Only with pressure gauge AG or RG

3 **WP, WPM** Only with connecting plate AGA, AGB, AGC, AGD or AGE

Transfer order code

– | | – | | – | | – | |

Soft-start valves MS4/MS6-DE, MS series

Peripherals overview

FESTO

Soft-start valve MS4/MS6-DE

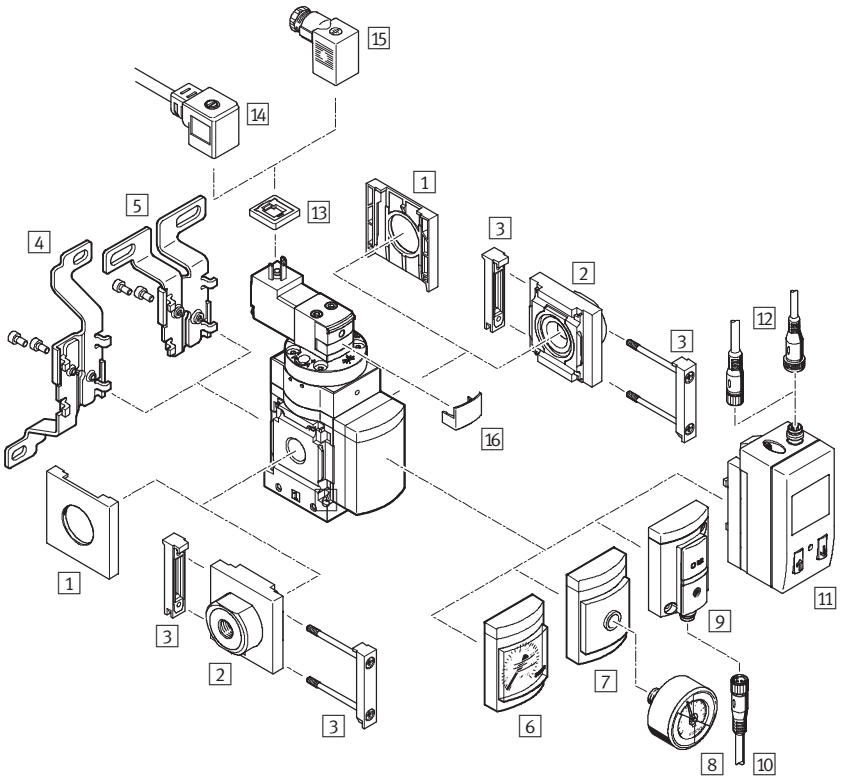

Note

Additional accessories:

- Module connector for combination with size MS4/MS6 or size MS9 ➔ Internet: amv, rmv, armv
- Adapter plate for mounting on profiles ➔ Internet: ipm-80, ipm-40-80, ipm-80-80

Soft-start valves MS4/MS6-DE, MS series

Peripherals overview

FESTO

Mounting attachments and accessories						
		Individual device		Combination		→ Page/Internet
		Without connecting plate	With connecting plate	Without connecting plate	With connecting plate	
1	Cover cap MS4/6-END	■	–	■	–	ms4-end, ms6-end
2	Connecting plate MS4/6-AG...	–	■	–	■	ms4-ag, ms6-ag
3	Module connector MS4/6-MV	–	■	■	■	ms4-mv, ms6-mv
4	Mounting bracket MS4/6-WB	■	■	–	–	ms4-wb, ms6-wb
5	Mounting bracket MS4-WBM	■	■	–	–	ms4-wbm
6	MS pressure gauge AG	■	■	■	■	46
7	Adapter plate for EN pressure gauge 1⁄8/1⁄4 A8/A4	■	■	■	■	46
8	Pressure gauge MA	■	■	■	■	83
9	Pressure sensor without display AD7 ... AD10	■	■	■	■	46
10	Connecting cable NEBU-M8...-LE3	■	■	■	■	83
11	Pressure sensor with display AD1 ... AD4	■	■	■	■	46
12	Connecting cable NEBU-M8...-LE3/NEBU-M12...-LE4	■	■	■	■	83
13	Illuminating seal MEB-LD	■	■	■	■	82
14	Plug socket with cable KMEB	■	■	■	■	82
15	Plug socket MSSD-EB	■	■	■	■	82
16	Locking clip CPV18-HV	■	■	■	■	82
–	Mounting bracket MS4/6-WP/WPB/WPE/WPM	–	■	■	■	ms4-wp, ms6-wp

Soft-start valves MS4/MS6-DE, MS series

Type codes

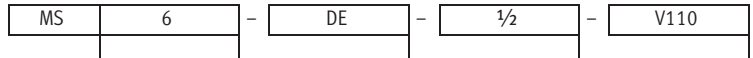

Series	
MS	Standard service unit

Size	
4	Grid dimension 40 mm
6	Grid dimension 62 mm

Service function	
DE	Solenoid actuated soft-start valve

Connection size	
MS4	
⅛	Thread G⅛
¼	Thread G¼
MS6	
¼	Thread G¼
⅜	Thread G⅜
½	Thread G½

Supply voltage	
10V24	Supply voltage 24 V DC
V110	Supply voltage 110 V AC
V230	Supply voltage 230 V AC

Additional variants can be ordered using the modular system ➔ 46

- Connecting plates
- Supply voltage
- Pressure gauge alternatives
- Alternative pressure gauge scale
- Type of mounting
- Alternative flow direction

Soft-start valves MS4/MS6-DE, MS series

Technical data

FESTO

Function

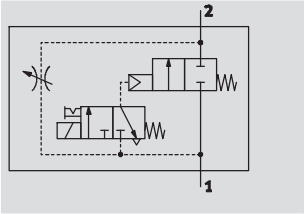

Flow rate
1,000 ... 6,450 l/min

Temperature range
–10 ... +60 °C

Operating pressure
4 ... 18 bar

The duration of the pressure build-up is adjusted using the restrictor attached to the valve cap.
The output pressure p2 rises slowly in accordance with the restrictor setting. Only the air flow from the restrictor is available when the solenoid valve is not actuated. The main seat is only opened by energising the solenoid valve.

When the solenoid valve is switched off, the main seat is closed and only the air flow from the flow control valve is available.
The solenoid valve should remain switched on in order to vent a system as this increases the flow rate from 2 and 1 and reduces the exhaust time.

- Solenoid actuated soft-start valve for slowly pressurising and venting pneumatic installations
- The drives advance slowly and reliably into the initial position
- Sudden and erratic movements are avoided
- With solenoid coil without plug socket
- Switch-through pressure can be precisely controlled using a solenoid valve
- Adjustable switching time delay
- Three voltage ranges can be selected
- Non-detenting and detenting manual override (variant 10V24: only non-detenting)
- Solenoid actuator can be repositioned by 180°
- Optional pressure sensor

General technical data						
Size		MS4		MS6		
Pneumatic connection 1, 2		G⅛	G¼	G¼	G⅜	G½
Design		Piston poppet valve				
Type of mounting		Via accessories				
		In-line installation				
Assembly position		Any				
Pressure indicator		Via pressure sensor for displaying output pressure via LCD display and electrical output				
		Via pressure sensor for displaying output pressure via operational status indicator and electrical output				
		Via pressure gauge for displaying output pressure				
Valve function		2/2-way valve				
Exhaust function		Flow control				
Type of reset		Mechanical spring				
Switching position display		Via accessories				
Pilot control mode		Piloted				
Pilot air supply		External				
Direction of flow		Non-reversible				
C value	[l/(s*bar)]	4.6	9.6	11.22	21.05	28.97
b value		0.5	0.45	0.54	0.48	0.39

Note: This product conforms to ISO 1179-1 and to ISO 228-1

Soft-start valves MS4/MS6-DE, MS series

Technical data

FESTO

Electrical data			
Size		MS4	MS6
Coil characteristics	V24	24 V DC	
	10V24	24 V DC	
	V110	110 V AC	
	V230	230 V AC	
Electrical connection		Plug, square design to EN 175301-803, type C	
Protection class solenoid coil		IP65	
Duty cycle	[%]	100	

Standard nominal flow rate qnN[1] [l/min]						
Size		MS4		MS6		
Pneumatic connection		G1/8	G1/4	G1/4	G3/8	G1/2
In main flow direction 1 → 2		1,000	2,000	2,700	5,050	6,450
In relief direction 2 → 1[2]		1,000	2,000	2,600	5,050	6,400

1) Measured at p1 = 6 bar and p2 = 5 bar, Δp = 1 bar
2) For energised solenoid valve.

Operating and environmental conditions							
Variant		Coil parameter V24, V110, V230		Coil parameter 10V24		Pressure sensor AD...	
Size		MS4	MS6	MS4	MS6	MS4	MS6
Operating pressure	[bar]	4 ... 14	4 ... 18	4 ... 10	4 ... 10	4 ... 10	4 ... 10
Operating medium		Compressed air				Filtered compressed air, lubricated or unlubricated, grade of filtration 40 µm	
Ambient temperature	[°C]	–10 ... +60	–10 ... +60	–10 ... +50	–10 ... +50	0 ... +50	0 ... +50
Temperature of medium	[°C]	–10 ... +60	–10 ... +60	–10 ... +50	–10 ... +50	0 ... +50	0 ... +50
Corrosion resistance	CRC[1]	2					

1) Corrosion resistance class 2 according to Festo standard 940 070
Components requiring moderate corrosion resistance. Externally visible parts with primarily decorative surface requirements which are in direct contact with a normal industrial environment or media such as coolants or lubricating agents.

Weights [g]		
Size	MS4	MS6
Soft-start valve	263	680

Materials

Sectional view

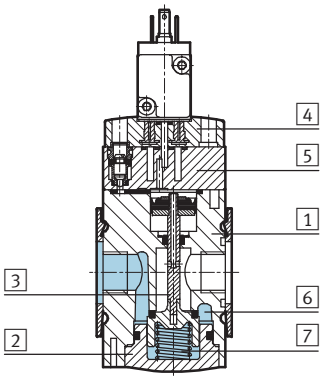

Soft-start valve		
1	Body	Die-cast aluminium
2	Base	Polyamide
3	Valve stem	Steel
4	End cap	Polyamide
5	Top plate	Polyamide
6	Seat	Aluminium/nitrile rubber
7	Springs	Spring steel
–	Seals	Nitrile rubber
	Note on materials	Free of copper and PTFE (not with variants AG, 10V24 or AD...)

Soft-start valves MS4/MS6-DE, MS series

Technical data

FESTO

Dimensions – Basic version

Download CAD data ➔ **www.festo.com**

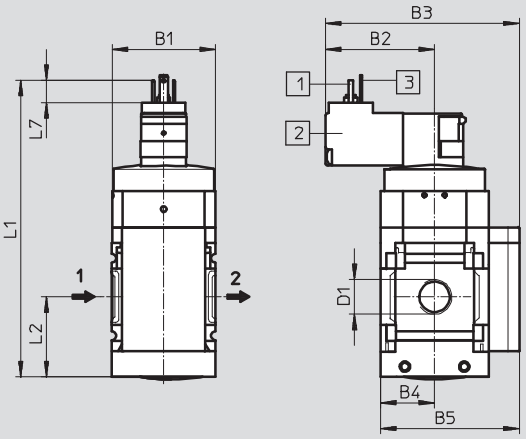

Supply voltage V24/V110/V230

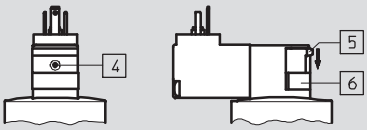

Supply voltage 10V24

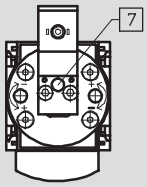

Note

For detenting manual override remove the grey cover plate 6 and press the slide 5 downwards.

1 Plug connection to EN 175301-803
2 Solenoid actuator can be repositioned by 180°, i.e. solenoid points to the front
3 PIN only with solenoid actuators 110 V and 230 V
4 Manual override, non-detenting (delivery status)
5 Slide
6 Cover plate
7 Manual override, only non-detenting

➔ Flow direction

Type	B1	B2		B3		B4	B5	D1	L1		L2	L7
		10V24	V24/ V110/ V230	10V24	V24/ V110/ V230				10V24	V24/ V110/ V230		
MS4-DE-⅛	40	34.9	42.2	67.9	75.2	21	54	G⅛	112.9	115.4	31.5	8.6
MS4-DE-¼								G¼				
MS6-DE-¼	62	44.7	52	89.7	97	31	76	G¼	144.9	147	45.5	8.6
MS6-DE-⅜								G⅜				
MS6-DE-½								G½				

Note: This product conforms to ISO 1179-1 and to ISO 228-1

Soft-start valves MS4/MS6-DE, MS series

Technical data

FESTO

Dimensions – Pressure gauge alternatives Download CAD data ➔ **www.festo.com**

Pressure sensor with LCD display AD1 ... AD4 Technical data ➔ Internet: sde1

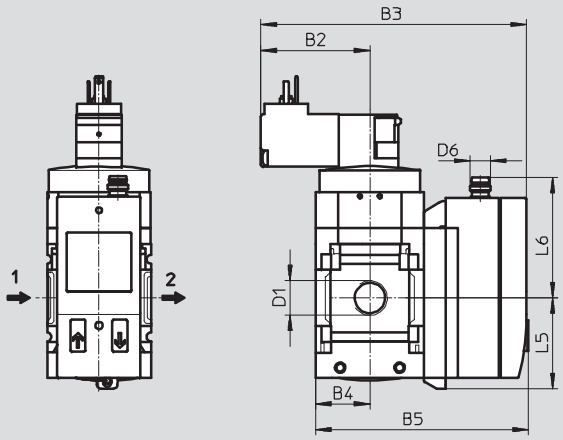

Variant AD1:
SDE1-D10-G2-MS-L-P1-M8 with 3-pin plug M8x1, 1 switching output PNP

Variant AD2:
SDE1-D10-G2-MS-L-N1-M8 with 3-pin plug M8x1, 1 switching output NPN

Variant AD3:
SDE1-D10-G2-MS-L-PI-M12 with 4-pin plug M12x1, 1 switching output PNP and 4 ... 20 mA analogue

Variant AD4:
SDE1-D10-G2-MS-L-NI-M12 with 4-pin plug M12x1, 1 switching output NPN and 4 ... 20 mA analogue

Pressure sensor without LCD display (operational status indicator only) AD7 ... AD10 Technical data ➔ Internet: sde5

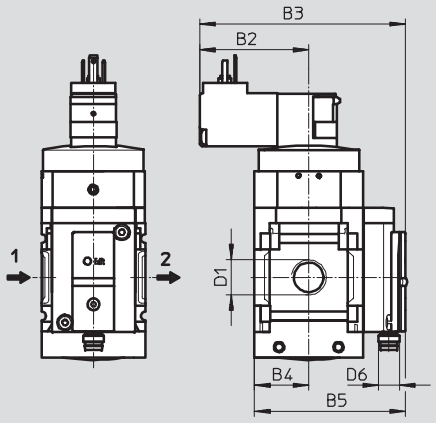

Variant AD7:
SDE5-D10-O-...-P-M8 with 3-pin plug M8x1, threshold value comparator, 1 switching output PNP, N/O contact

Variant AD8:
SDE5-D10-C-...-P-M8 with 3-pin plug M8x1, threshold value comparator, 1 switching output PNP, N/C contact

Variant AD9:
SDE5-D10-O3-...-P-M8 with 3-pin plug M8x1, window comparator, 1 switching output PNP, N/O contact

Variant AD10:
SDE5-D10-C3-...-P-M8 with 3-pin plug M8x1, window comparator, 1 switching output PNP, N/C contact

Type	B2		B3		B4	B5	D1	D6	L5	L6
	10V24	V24/ V110/ V230	10V24	V24/ V110/ V230						
MS4-DE-⅛-...-AD1/AD2	34.9	42.2	96.5	103.8	21	82.6	G⅛	M8x1	35.1	46.7
MS4-DE-¼-...-AD1/AD2							G¼			
MS4-DE-⅛-...-AD3/AD4	34.9	42.2	96.5	103.8	21	82.6	G⅛	M12x1	35.1	55.8
MS4-DE-¼-...-AD3/AD4							G¼			
MS4-DE-⅛-...-AD7/AD8/AD9/AD10	34.9	42.2	73	80.3	21	59.1	G⅛	M8x1	–	–
MS4-DE-¼-...-AD7/AD8/AD9/AD10							G¼			
MS6-DE-¼-...-AD1/AD2	44.7	52	116.7	124	31	103	G¼	M8x1	35.1	46.7
MS6-DE-⅜-...-AD1/AD2							G⅜			
MS6-DE-½-...-AD1/AD2							G½			
MS6-DE-¼-...-AD3/AD4	44.7	52	116.7	124	31	103	G¼	M12x1	35.1	55.8
MS6-DE-⅜-...-AD3/AD4							G⅜			
MS6-DE-½-...-AD3/AD4							G½			
MS6-DE-¼-...-AD7/AD8/AD9/AD10	44.7	52	92.9	100.2	31	79	G¼	M8x1	–	–
MS6-DE-⅜-...-AD7/AD8/AD9/AD10							G⅜			
MS6-DE-½-...-AD7/AD8/AD9/AD10							G½			

Note: This product conforms to ISO 1179-1 and to ISO 228-1

Soft-start valves MS4/MS6-DE, MS series

Technical data

FESTO

Dimensions – Pressure gauge alternatives

Download CAD data ➔ **www.festo.com**

Integrated MS pressure gauge with standard scale AG or red-green scale RG, display unit [bar]

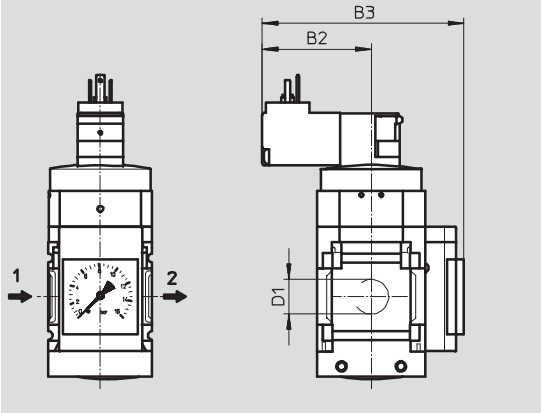

Adapter plate A8/A4 for EN pressure gauge 1/8/1/4, without pressure gauge

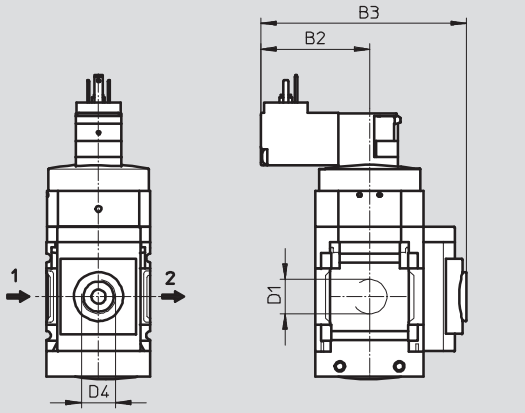

Type	B2		B3		D1	D4
	10V24	V24/V110/V230	10V24	V24/V110/V230		
MS4-DE-1/8-...-AG	34.9	42.2	78.9	86.2	G1/8	–
MS4-DE-1/4-...-AG					G1/4	
MS4-DE-1/8-...-RG	34.9	42.2	80.4	87.7	G1/8	–
MS4-DE-1/4-...-RG					G1/4	
MS4-DE-1/8-...-A8	34.9	42.2	72.4	79.7	G1/8	G1/8
MS4-DE-1/4-...-A8					G1/4	
MS4-DE-1/8-...-A4	34.9	42.2	72.4	79.7	G1/8	G1/4
MS4-DE-1/4-...-A4					G1/4	
MS6-DE-1/4-...-AG	44.7	52	98.7	106	G1/4	–
MS6-DE-3/8-...-AG					G3/8	
MS6-DE-1/2-...-AG					G1/2	
MS6-DE-1/4-...-RG	44.7	52	100.2	107.5	G1/4	–
MS6-DE-3/8-...-RG					G3/8	
MS6-DE-1/2-...-RG					G1/2	
MS6-DE-1/4-...-A4	44.7	52	92.3	99.6	G1/4	G1/4
MS6-DE-3/8-...-A4					G3/8	
MS6-DE-1/2-...-A4					G1/2	

Note: This product conforms to ISO 1179-1 and to ISO 228-1

Ordering data

Size	Connection	Supply voltage 24 V DC		Supply voltage 110 V AC		Supply voltage 230 V AC	
		Part No.	Type	Part No.	Type	Part No.	Type
MS4	G1/8	**542560**	**MS4-DE-1/8-10V24**	**529525**	**MS4-DE-1/8-V110**[1)]	**529527**	**MS4-DE-1/8-V230**[1)]
	G1/4	**542558**	**MS4-DE-1/4-10V24**	**529519**	**MS4-DE-1/4-V110**[1)]	**529521**	**MS4-DE-1/4-V230**[1)]
MS6	G1/4	**542564**	**MS6-DE-1/4-10V24**	**529805**	**MS6-DE-1/4-V110**[1)]	**529807**	**MS6-DE-1/4-V230**[1)]
	G3/8	**542566**	**MS6-DE-3/8-10V24**	**529811**	**MS6-DE-3/8-V110**[1)]	**529813**	**MS6-DE-3/8-V230**[1)]
	G1/2	**542562**	**MS6-DE-1/2-10V24**	**529799**	**MS6-DE-1/2-V110**[1)]	**529801**	**MS6-DE-1/2-V230**[1)]

1) Free of copper and PTFE

Soft-start valves MS4/MS6-DE, MS series

Ordering data – Modular products

FESTO

M Mandatory data →

Module No.	Series	Size		Function		Connection size		Supply voltage	
527713 527686	MS	4 6		DE		1/8, 1/4, 3/8, 1/2 AGA, AGB, AGC, AGD, AGE		V24 10V24 V110 V230	
Order example									
527713	**MS**	**4**	–	**DE**	–	**AGA**	–	**V110**	–

Ordering table

Grid dimension [mm]		40	62	Conditions	Code	Enter code
M	Module No.	**527713**	**527686**			
	Series	Standard			**MS**	MS
	Size	4	6		**...**	
	Function	Soft-start valve, electrical			**-DE**	-DE
	Connection size	Thread G1/8	–		**-1/8**	
		Thread G1/4	Thread G1/4		**-1/4**	
		–	Thread G3/8		**-3/8**	
		–	Thread G1/2		**-1/2**	
		Connecting plate G1/8	–		**-AGA**	
		Connecting plate G1/4	Connecting plate G1/4		**-AGB**	
		Connecting plate G3/8	Connecting plate G3/8		**-AGC**	
		–	Connecting plate G1/2		**-AGD**	
		–	Connecting plate G3/4		**-AGE**	
	Supply voltage	24 V DC (pin allocation to EN 175301) 4 ... 14 bar	4 ... 18 bar		**-V24**	
		24 V DC (pin allocation to EN 175301) 4 ... 10 bar	4 ... 10 bar	1	**-10V24**	
		110 V AC (pin allocation to EN 175301) 4 ... 14 bar	4 ... 18 bar		**-V110**	
↓		230 V AC (pin allocation to EN 175301) 4 ... 14 bar	4 ... 18 bar		**-V230**	

1 **10V24** Max. supply pressure 10 bar

Transfer order code

	MS		–	DE	–		–	

Soft-start valves MS4/MS6-DE, MS series

Ordering data – Modular products

FESTO

➔ 0 **Options**

	Pressure gauge/adapter		Alternative pressure gauge scale		Type of mounting		Alternative flow direction
	AG, A8, A4, RG, AD1, AD2, AD3, AD4, AD7, AD8, AD9, AD10		PSI MPA		WP WPM WB WBM		Z
–	**AG**	–	**PSI**	–	**WP**	–	**Z**

Ordering table

Grid dimension [mm]		40	62	Conditions	Code		Enter code
0	Pressure gauge/adapter	MS pressure gauge (with adapter plate)	MS pressure gauge		-AG		
		Adapter plate for EN pressure gauge ⅛, without pressure gauge	–		-A8		
		Adapter plate for EN pressure gauge ¼, without pressure gauge			-A4		
		Integrated pressure gauge, red-green scale			-RG		
		Pressure sensor with display, plug M8, 1 switching output PNP, 3-pin		2	-AD1		
		Pressure sensor with display, plug M8, 1 switching output NPN, 3-pin		2	-AD2		
		Pressure sensor with display, plug M12, 1 switching output PNP, 4-pin, analogue output 4 ... 20 mA		2	-AD3		
		Pressure sensor with display, plug M12, 1 switching output NPN, 4-pin, analogue output 4 ... 20 mA		2	-AD4		
		Pressure sensor without display, plug M8, threshold value comparator, PNP, N/O contact		2	-AD7		
		Pressure sensor without display, plug M8, threshold value comparator, PNP, N/C contact		2	-AD8		
		Pressure sensor without display, plug M8, window comparator, PNP, N/O contact		2	-AD9		
		Pressure sensor without display, plug M8, window comparator, PNP, N/C contact		2	-AD10		
	Alternative pressure gauge scale	psi		3	-PSI		
		MPa		3	-MPA		
	Type of mounting	Mounting bracket		4	-WP		
		Mounting bracket		4	-WPM		
		Mounting bracket			-WB		
		Mounting bracket	–		-WBM		
	Alternative flow direction	Flow direction from right to left			-Z		

2 **AD1 ... AD4,AD7 ... AD10** Measuring range max. 10 bar

3 **PSI, MPA** Only with pressure gauge AG or RG

4 **WP, WPM** Only with connecting plate AGA, AGB, AGC, AGD or AGE

Transfer order code

–		–		–		–	

Soft start and exhaust valves MS6-SV, MS series

Peripherals overview

FESTO

Soft start and exhaust valves MS6-SV

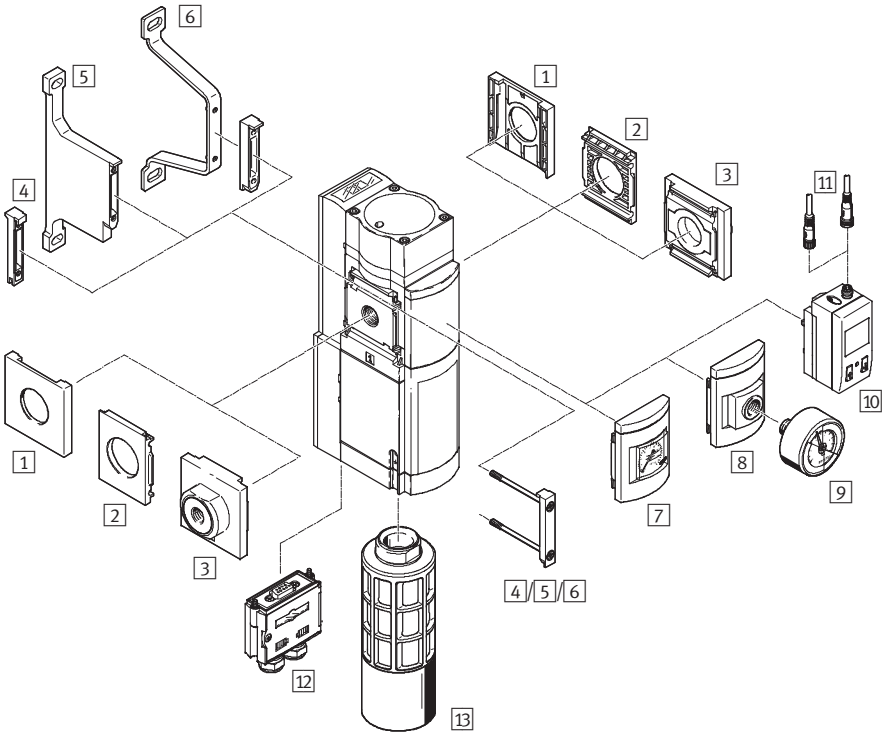

Note

Other accessories:
- Module connector for combination with sizes MS4/MS6 or size MS9 ➔ Internet: amv, rmv, armv
- Adapter plate for mounting on profiles ➔ Internet: ipm-80, ipm-40-80, ipm-80-80

Mounting attachments and accessories

		Individual device		Combination		➔ Page/Internet
		Without connecting plate	With connecting plate	Without connecting plate	With connecting plate	
1	Cover cap MS6-END	–	–	■	–	ms6-end
2	Mounting plate MS6-AEND	■1)	–	■2)	–	ms6-aend
3	Connecting plate MS6-AG...	–	■1)	–	■2)	ms6-ag
4	Module connector MS6-MV	–	–	■	■	ms6-mv
5	Mounting bracket MS6-WPB	■	■	■	■	ms6-wpb
6	Mounting bracket MS6-WPE	■	■	■	■	ms6-wpe
7	MS pressure gauge AG	■	■	■	■	55
8	Adapter plate for EN pressure gauge ¼ A4	■	■	■	■	55
9	Pressure gauge MA	■	■	■	■	83
10	Pressure sensor with display AD1 ... AD4	■	■	■	■	55
11	Connecting cable NEBU-M8...-LE3/NEBU-M12...-LE4	■	■	■	■	83
12	Multi-pin plug socket NECA	■	■	■	■	56
13	Silencer UOS-1	■	■	■	■	57

1) Mounting bracket MS6-WPB/WPE is required for mounting.
2) Module connector MS6-MV or mounting bracket MS6-WPB/WPE is required for mounting.

Soft-start and exhaust valves MS6-SV, MS series

FESTO

Type codes

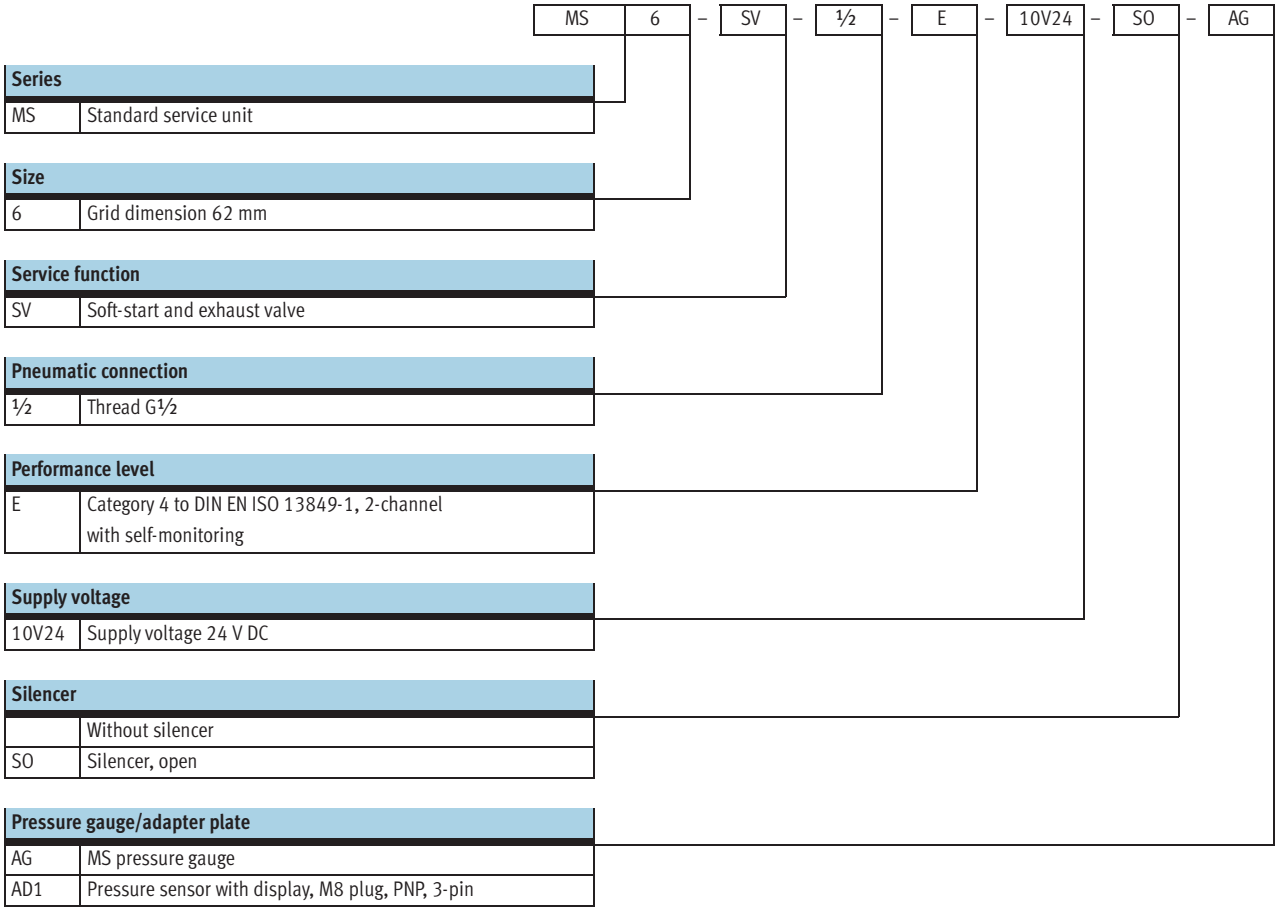

Series	
MS	Standard service unit

Size	
6	Grid dimension 62 mm

Service function	
SV	Soft-start and exhaust valve

Pneumatic connection	
½	Thread G½

Performance level	
E	Category 4 to DIN EN ISO 13849-1, 2-channel with self-monitoring

Supply voltage	
10V24	Supply voltage 24 V DC

Silencer	
	Without silencer
SO	Silencer, open

Pressure gauge/adapter plate	
AG	MS pressure gauge
AD1	Pressure sensor with display, M8 plug, PNP, 3-pin

Additional variants can be ordered using the modular system ➔ 55

- Sub-bases
- Pressure gauge/adapter plate
- Alternative pressure gauge scale
- Multi-pin plug socket
- Type of mounting
- Alternative flow direction

Soft-start and exhaust valves MS6-SV, MS series

Technical data

FESTO

Function

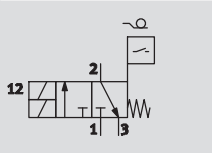

Flow rate
4,300 l/min

Temperature range
–10 … +50 °C

Operating pressure
3.5 … 10 bar

The electropneumatic soft-start and exhaust valve is used to reduce pressure quickly and reliably and to build up pressure gradually in industrial pneumatic systems and terminals. The device is an intrinsically safe, redundant mechatronic system conforming to the requirements of DIN EN ISO 13849-1. The safety-related pneumatic protection objective and safe exhausting are ensured, even in the case of valve defects (e.g. sticking of a slide). Thanks to the 2-channel design and its monitoring, the device fulfils controller category 4 requirements. Thus, with correct installation and consideration of the specific application data, performance level "e" can be attained.
Via the electrical connection (multi-pin plug socket NECA Sub-D, 9-pin), the device receives the secure enable signals (EN1/EN2) from commercially available electronic or electromechanical protective switchgear, which monitor the protective equipment of the machine (e.g. emergency stop, light curtain, electrical door switch of the protective enclosure etc.).

Note

The device must only be used in conjunction with an NECA approved multi-pin plug socket. This can be ordered via the modular product system (MP… ➔ 55) or as an accessory (NECA ➔ 56).

Note

To avoid back pressures, it is recommended that the device be operated together with the silencer UOS-1. The silencer can be ordered via the modular product system (SO ➔ 55) or as an accessory (UOS-1 ➔ 57).

Note

Only devices that do not impair the pneumatic protective measure – safe venting – may be placed downstream of the MS6-SV.
The MS6-SV is not permitted for use as a press safety valve.

- Performance level "e"/category 4 to DIN EN ISO 13849-1
- Conforms to EN 61508
- A switching time delay adjusted via a flow control valve for gradual pressure build-up
- Optional pressure sensor

Safety data	
Conforms to	DIN EN ISO 13849-1
– Category	– 4
– Performance Level (PL)	– "e"
– $MTTF_d$ value[1)]	– 200 years (= high)
– B10 value	– 250,000 switching cycles
Conforms to	EN 61508
– Safety Integrity Level (SIL)	– "3"
– PFH_d value	– $10^{-8} < PFH_d < 10^{-7}$
mMax. service life	20 years

1) Under the following conditions: number: 365 days/year, 24 hours/day; actuations: approx. 1x/21 min; service life: 20 years; $B10_d$: 500,000 switching cycles

Safety instructions: switching frequency min. 1/month

The mechanical system is not tested in the controlled (i.e. pressurised) state. If the process-related switching frequency (safe venting) is less than once a month, the machine operator must carry out a forced switch-off.

Soft-start and exhaust valves MS6-SV, MS series

Technical data

FESTO

General technical data	
Pneumatic connection 1, 2	G½
Pneumatic connection 3	G1
Design	Piston seat
Type of mounting	Via accessories
	In-line installation
Mounting position	Any
Pressure display	Via pressure sensor for displaying output pressure via LCD display and electrical output
	Via pressure gauge for displaying output pressure
Position sensing principle	Solenoid piston principle
Valve function	3/2-way valve, single solenoid, closed
Manual override	None
Reset method	Mechanical spring
Switching position display	LED and floating contact
Type of control	Direct
Pilot air supply	Internal
Direction of flow	Non-reversible
C value [l/(s*bar)]	19.3
b value	0.21

Note: This product conforms to ISO 1179-1 and to ISO 228-1

Standard nominal flow rate qnN[1] [l/min]	
In main flow direction 1 → 2	4,300
In relief direction 2 → 3	9,000[2]
	6,000[2] (in the event of a critical fault)

1) Measured at p1 = 6 bar and p2 = 5 bar, Δp = 1 bar
2) Measured with respect to atmosphere with silencer UOS-1

Electrical data		
Electrical connection		Sub-D, 9-pin
Operating voltage range	[V DC]	21.6 ... 26.4
Nominal operating voltage	[V DC]	24
Duty cycle	[%]	100
Response time off	[ms]	40
Response time on	[ms]	130
Degree of protection		IP65 with multi-pin plug socket NECA

Operating and environmental conditions			
Variant		Standard	Pressure sensor AD...
Operating pressure	[bar]	3.5 ... 10	3.5 ... 10
Operating medium		Compressed air	Filtered compressed air, lubricated or unlubricated, grade of filtration 40 µm
Ambient temperature	[°C]	–10 ... +50	0 ... +50
Temperature of medium	[°C]	–10 ... +50	0 ... +50
Corrosion resistance class CRC[1]		2	
Noise level	[dB (A)]	75 (with silencer UOS-1)	
CE mark (see declaration of conformity)		To EU EMC Directive	
Fire protection classification to UL 94		V0-V2	
Certification		BGIA	

1) Corrosion resistance class 2 according to Festo standard 940 070
Components subject to moderate corrosion stress. Externally visible parts with primarily decorative surface requirements which are in direct contact with a normal industrial environment or media such as coolants or lubricating agents.

Soft-start and exhaust valves MS6-SV, MS series

Technical data

Weights [g]	
Soft-start and exhaust valve	2,000
Soft-start and exhaust valve with silencer UOS-1	2,200

Materials	
Housing	Die-cast aluminium
Seals	Nitrile rubber

Multi-pin plug socket

Description		Enable signals (EN1/EN2)	Example of connection
NECA-...-MP1	• Static enable signals (EN1 = 24 V, EN2 = 24 V).	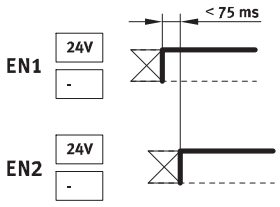	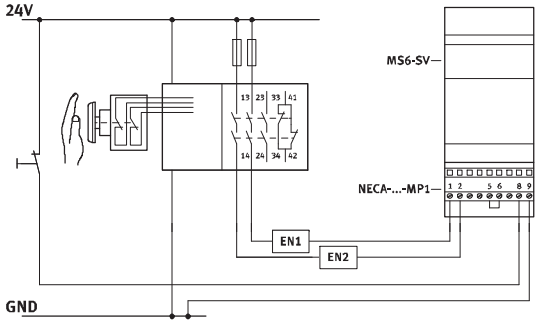
	• Clocked enable signals (EN1 = 0 ... 24 V, EN2 = 0 ... 24 V) for cross circuit detection. Cross circuit detection with clock signals is in principle carried out by the protective switch-gear/safety PLC used.	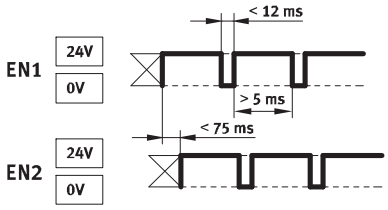	
		Note Given the fact that clock outputs from different controller manufacturers are not standardised, their usability must be checked in each case. If the clock pulse is outside of the described limits, this is recognised by the MS6-SV as an error and a safe switch-off is performed.	
NECA-...-MP3	• Static enable signals (EN1 = 0 V, EN2 = 24 V). • Static cross circuit monitoring possible. A cross circuit in lines EN1 and EN2 does not lead to inadvertent start-up of the valve.	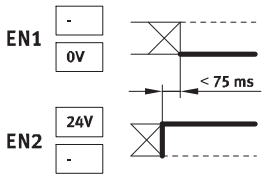	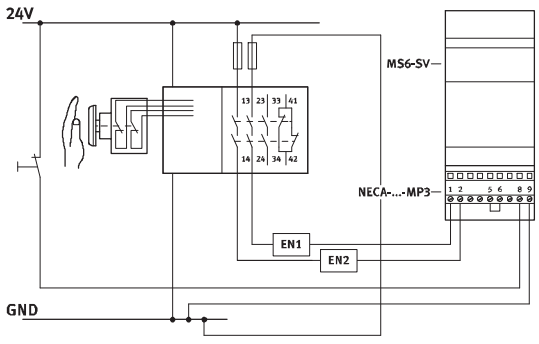

Soft-start and exhaust valves MS6-SV, MS series

Technical data

FESTO

Switching point

Pressure p as a function of time t

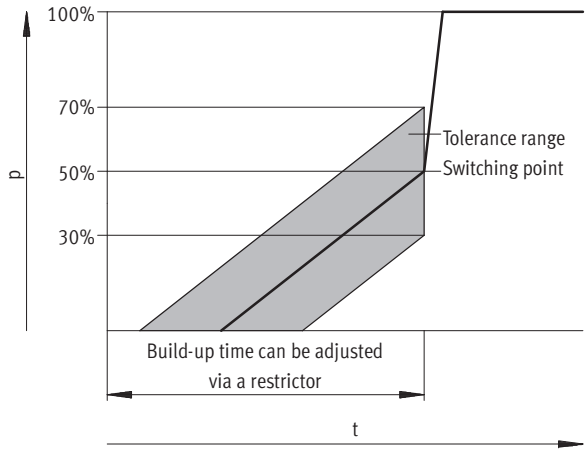

Dimensions – Standard

Download CAD data ➔ **www.festo.com**

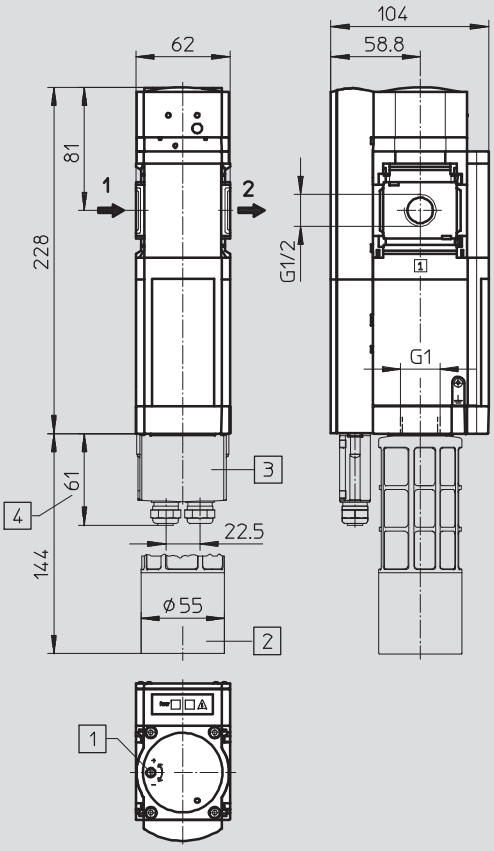

1 Regulating screw for flow control valve
2 Silencer UOS-1
3 Multi-pin plug socket NECA
4 Dimension without cable

➔ Flow direction

Note: This product conforms to ISO 1179-1 and to ISO 228-1

Soft-start and exhaust valves MS6-SV, MS series

Technical data

Dimensions – Pressure gauge alternatives Download CAD data ➔ **www.festo.com**

Integrated MS pressure gauge AG, display unit [bar]

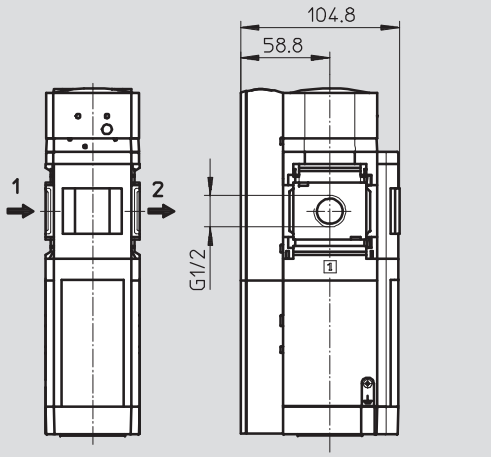

Adapter plate A4 for EN pressure gauge ¼, without pressure gauge

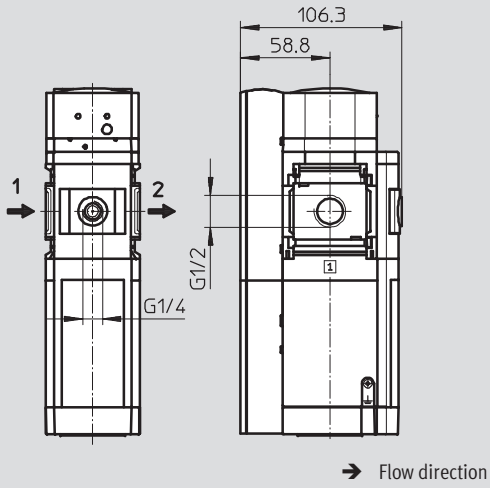

Note: This product conforms to ISO 1179-1 and to ISO 228-1

Dimensions – Pressure gauge alternatives Download CAD data ➔ **www.festo.com**

Pressure sensor with LCD display AD1 ... AD4 Technical data ➔ Internet: sde1

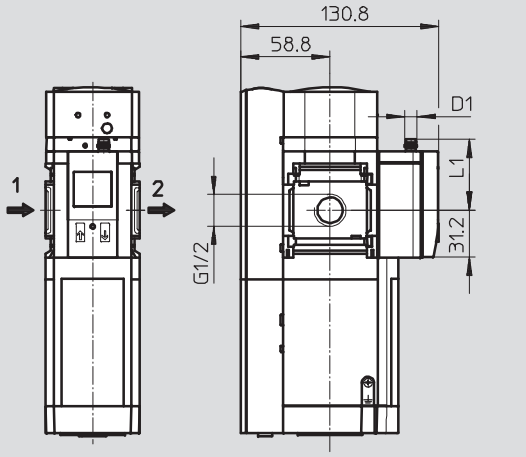

AD1 variants:
SDE1-D10-G2-MS-L-P1-M8
with 3-pin plug M8x1,
1 switching output PNP

AD2 variants:
SDE1-D10-G2-MS-L-N1-M8
with 3-pin plug M8x1,
1 switching output NPN

AD3 variants:
SDE1-D10-G2-MS-L-PI-M12
with 4-pin plug M12x1,
1 switching output PNP
and 4 ... 20 mA analogue

AD4 variants:
SDE1-D10-G2-MS-L-NI-M12
with 4-pin plug M12x1,
1 switching output NPN
and 4 ... 20 mA analogue

Type	D1	L1
MS6-SV-...-AD1/AD2	M8x1	46.7
MS6-SV-...-AD3/AD4	M12x1	55.8

Note: This product conforms to ISO 1179-1 and to ISO 228-1

Ordering data

Size	Connection	Without silencer		With silencer	
		Part No.	Type	Part No.	Type
MS pressure gauge, display unit [bar]					
MS6	G½	**548715**	**MS6-SV-½-E-10V24-AG**	**548717**	**MS6-SV-½-E-10V24-SO-AG**
Pressure sensor with display, M8 plug, PNP, 3-pin					
MS6	G½	**562580**	**MS6-SV-½-E-10V24-AD1**	–	

Soft-start and exhaust valves MS6-SV, MS series

Ordering data – Modular products

FESTO

M Mandatory data							O Options					
Module No.	Series	Size	Function	Connection size	Performance level	Supply voltage	Silencer	Pressure gauge/ adapter plate	Alternative pressure gauge scale	Multi-pin plug socket	Type of mounting	Alternative flow direction
548713	MS	6	SV	½ AGB AGC AGD AGE	E	10V24	SO	AG A4 AD1 AD2 AD3 AD4	PSI MPA	MP1 MP3	WPB	Z
Order example												
548713	**MS**	**6**	– **SV**	– **AGB**	– **E**	– **10V24**	– **SO**	– **AG**	–	– **MP1**	– **WPB**	–

Ordering table						
Grid dimension	[mm]	62	Conditions	Code		Enter code
M Module No.		**548713**				
Series		Standard		**MS**		MS
Size		6		**6**		6
Function		Soft-start and exhaust valve		**-SV**		-SV
Connection size		Thread G½		**-½**		
		Connecting plate G¼		**-AGB**		
		Connecting plate G⅜		**-AGC**		
		Connecting plate G½		**-AGD**		
		Connecting plate G¾		**-AGE**		
Performance level		Category 4 to DIN EN ISO 13849-1, 2-channel with self-monitoring		**-E**		-E
Supply voltage		24 V DC, 10 bar		**-10V24**		-10V24
O Silencer		Silencer, open		**-SO**		
Pressure gauge/ adapter plate	Pressure gauge	MS pressure gauge		**-AG**		
	Adapter	For EN pressure gauge ¼, without pressure gauge		**-A4**		
	Pressure sensor	With display, plug M8, PNP, 3-pin		**-AD1**		
		With display, plug M8, NPN, 3-pin		**-AD2**		
		With display, plug M12, PNP, 4-pin, analogue output 4 … 20 mA		**-AD3**		
		With display, plug M12, NPN, 4-pin, analogue output 4 … 20 mA		**-AD4**		
Alternative pressure gauge scale		psi	1	**-PSI**		
		MPa	1	**-MPA**		
Multi-pin plug socket	Sub-D, 9-pin, screw terminal	Without cable, enable signals static (EN1 = 24 V, EN2 = 24 V)		**-MP1**		
		Without cable, enable signals static (EN1 = 0 V, EN2 = 24 V), cross circuit detection possible		**-MP3**		
Type of mounting		Wall mounting plate, large clearance		**-WPB**		
Alternative flow direction		Flow direction from right to left		**-Z**		

1 **PSI, MPA** Not with pressure gauge/adapter plate A4, AD1, AD2, AD3, AD4

Transfer order code

548713	MS	6	– SV	–	– E	– 10V24	–	–	–	–	–	–

Soft start and exhaust valves MS6-SV, MS series

Accessories

Multi-pin plug socket NECA
(order code: MP1/MP3)

- For soft start and exhaust valve MS6-SV

Material:
Housing: Reinforced polyamide
Screws: Steel
Union nut: Brass
Seals: Nitrile rubber

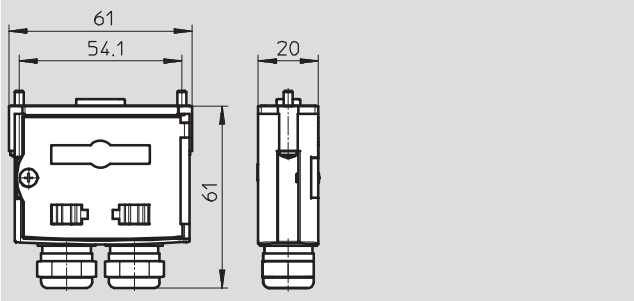

Technical data		
Type of mounting		Via through-holes
Electrical connection		Sub-D, 9-pin, screw terminal 9-pin
Operating voltage range	[V DC]	21.6 ... 26.4
Nominal operating voltage	[V DC]	24
Current-carrying capacity	[A]	1.0
Connection cross section	[mm^2]	0.34 ... 1.0 without wire end sleeves
	[mm^2]	0.34 ... 0.5 with wire end sleeves
Permissible cable diameter	[mm]	5 ... 10
Protection class to IEC 60529		IP65

Operating and environmental conditions		
Relative air humidity		95%, non-condensing
Ambient temperature	[°C]	0 ... +50
Storage temperature	[°C]	–20 ... +70
Corrosion resistance class CRC[1)]		2

1) Corrosion resistance class 2 to Festo standard 940 070
Components subject to moderate corrosion stress. Externally visible parts with primarily decorative surface requirements which are in direct contact with a normal industrial environment or media such as coolants or lubricating agents.

Ordering data				
Size	Connection	Weight [g]	Part No.	Type
MS6	Without cable, enable signals static (EN1 = 24 V, EN2 = 24 V)	60	**548719**	**NECA-S1G9-P9-MP1**
	Without cable, enable signals static (EN1 = 0 V, EN2 = 24 V), short-circuit detection possible	60	**552703**	**NECA-S1G9-P9-MP3**

Soft start and exhaust valves MS6-SV, MS series

Accessories

FESTO

Silencer UOS-1
(order code: SO)

- For soft start and exhaust valve MS6-SV

Materials:
Housing: Polyacetate
Sleeve: Wrought aluminium alloy
Silencer insert: Polyethylene
Free of copper and PTFE

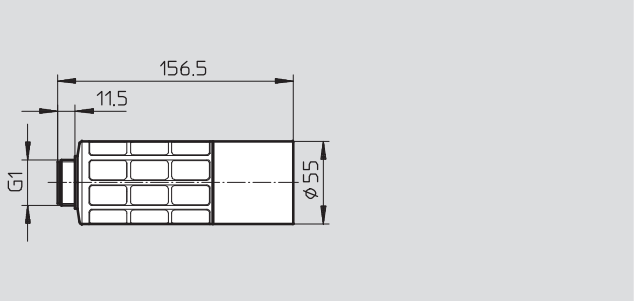

Technical data	
Pneumatic connection	G1
Design	Silencer, open
Type of mounting	Via male thread
Assembly position	Any
Type of seal on threaded collar	No seal

Operating and environmental conditions		
Operating pressure	[bar]	0 ... 10
Operating medium		Compressed air
Ambient temperature	[°C]	–10 ... +50
Corrosion resistance class CRC[1)]		2

1) Corrosion resistance class 2 to Festo standard 940 070
Components subject to moderate corrosion stress. Externally visible parts with primarily decorative surface requirements which are in direct contact with a normal industrial environment or media such as coolants or lubricating agents.

Ordering data			
Size	Weight [g]	Part No.	Type
MS6	200	**552252**	**UOS-1**

On-off valves MS12-EM, MS series

Peripherals overview

On-off valves MS12-EM

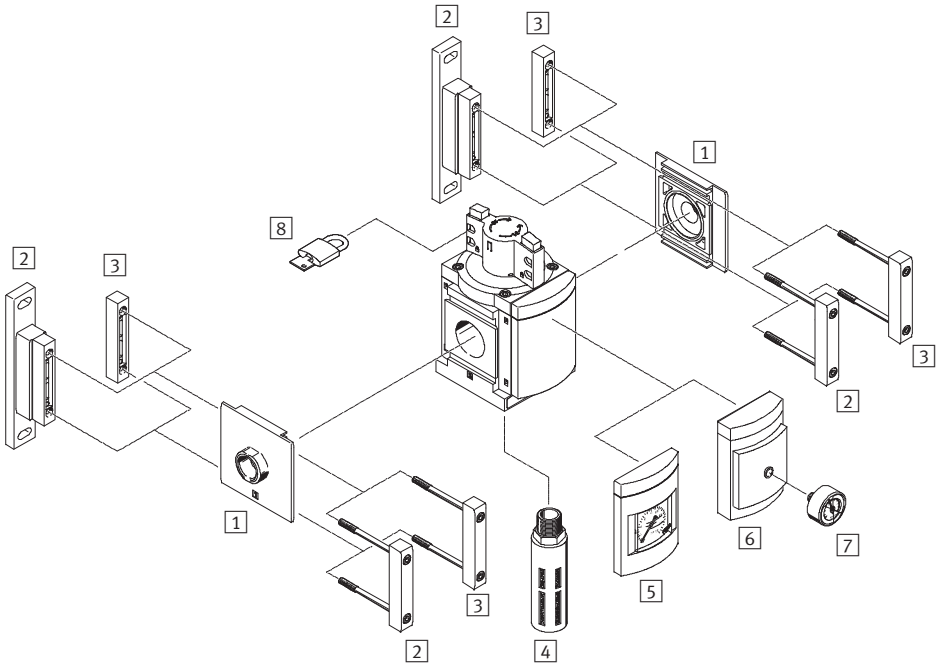

- Note

Additional accessories:

– Module connector for combination with size MS9 ➔ Internet: armv

Mounting attachments and accessories		➔ Page/Internet
1	Connecting plate MS12-AG...	ms12-ag
2	Mounting bracket MS12-WP	ms12-wp
3	Module connector MS12-MV	ms12-mv
4	Silencer U	83
5	MS pressure gauge AG	63
6	Adapter for EN pressure gauge ¼ A4	63
7	Pressure gauge MA	83
8	Padlock LRVS-D	83

On-off valves MS12-EM, MS series

Type codes

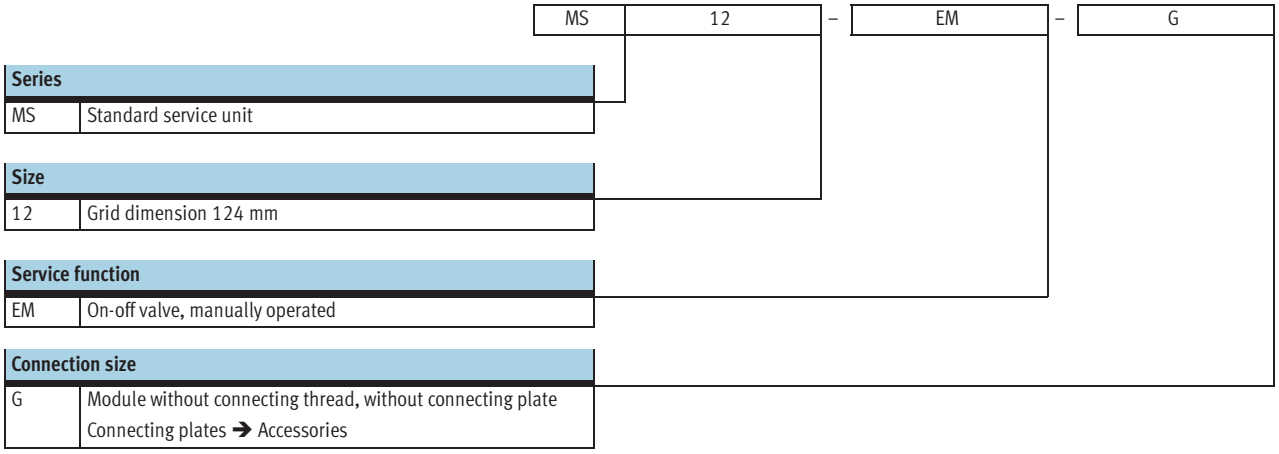

Series	
MS	Standard service unit

Size	
12	Grid dimension 124 mm

Service function	
EM	On-off valve, manually operated

Connection size	
G	Module without connecting thread, without connecting plate Connecting plates ➔ Accessories

Further variants can be ordered using the modular system ➔ 63

- Connecting plates
- Silencer
- Pressure gauge/adapter
- Alternative pressure gauge scale
- Type of mounting
- Alternative flow direction

On-off valves MS12-EM, MS series

Technical data

Function

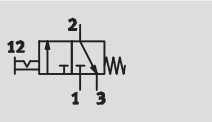

- Flow rate
  25,000 ... 32,000 l/min
- Temperature range
  –10 ... +60 °C
- Operating pressure
  0 ... 21 bar

- Manually operated on-off valve for pressurising and venting pneumatic installations
- Ducted exhaust possible via a threaded connection with silencer
- The switching position is immediately recognisable
- Actuator secured by locking the rotary knob
- Commercially available padlock can be used for security

General technical data				
Pneumatic connection 1, 2[1]	G1	G1¼	G1½	G2
Pneumatic connection 3	G1			
Design	Piston spool valve			
Type of mounting	Via accessories			
	In-line installation			
Assembly position	Any			
Valve function	3/2-way valve, double solenoid			
Exhaust function	Without flow control			
Switching position display	Knob actuator direction = flow direction			
Type of actuation	Direct			
Pilot air supply	Internal			
Direction of flow	Non-reversible			

1) Dependent on connecting plate selected, must be ordered separately as an accessory ➔ Internet: ms12-ag

Note: This product conforms to ISO 1179-1 and to ISO 228-1

Standard nominal flow rate qnN[1] [l/min]	
In main flow direction 1 → 2	25,000 ... 32,000
In relief direction 2 → 3	13,000

1) Measured at p1 = 6 bar and Δp = 1 bar

Operating and environmental conditions		
Operating pressure	[bar]	0 ... 21
Operating medium		Compressed air
Ambient temperature	[°C]	–10 ... +60
Temperature of medium	[°C]	–10 ... +60
Corrosion resistance	CRC[1]	2

1) Corrosion resistance class 2 according to Festo standard 940 070
Components requiring moderate corrosion resistance. Externally visible parts with primarily decorative surface requirements which are in direct contact with a normal industrial environment or media such as coolants or lubricating agents.

On-off valves MS12-EM, MS series

Technical data

Weights [g]	
On-off valve	3,900
On-off valve with silencer S	4,000

Materials

Sectional view

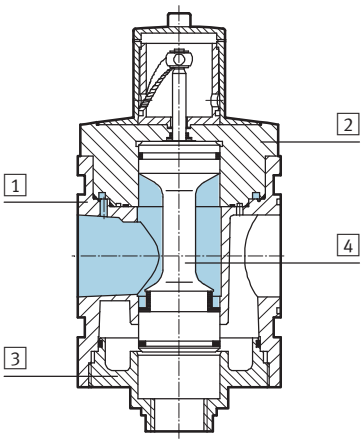

On-off valve		
1	Body	Die-cast aluminium
2	Cap, top	Aluminium
3	Cap, bottom	Aluminium
4	Valve spool	Stainless steel, polyacetate, nitrile rubber
–	Springs	Steel
–	Covers/cover plates	Polyamide
–	Seals	Nitrile rubber
	Note on materials	Free of copper and PTFE (not with variant AG)

Dimensions – Standard

Download CAD data ➔ **www.festo.com**

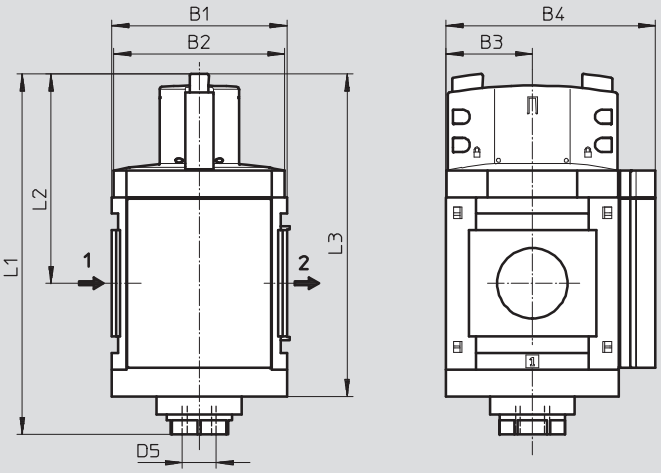

➔ Flow direction

Type	B1	B2	B3	B4	L1	L2	L3	D5
MS12-EM	124	122	61	148	255	148	228	G1

Dimensions – Silencer

Download CAD data ➔ **www.festo.com**

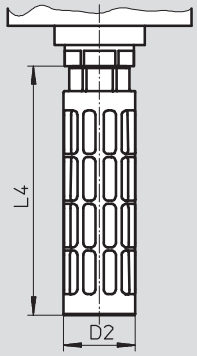

Type	D2 ∅	L4
MS12-EM-...-S	47.8	165.5

Dimensions – Pressure gauges/adapters

Download CAD data ➔ **www.festo.com**

Integrated MS pressure gauge AG, display unit [bar]

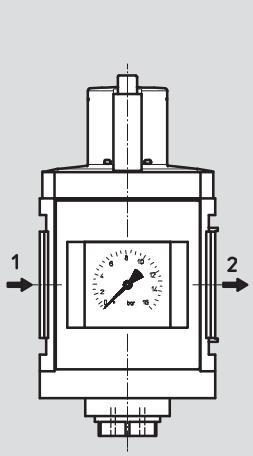

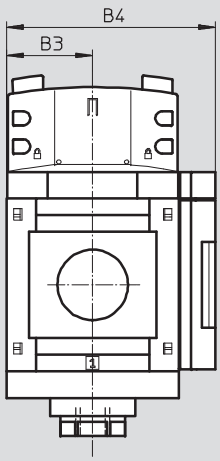

Adapter A4 for EN pressure gauge ¼, without pressure gauge

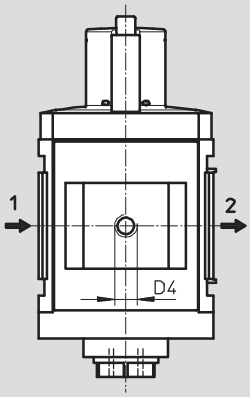

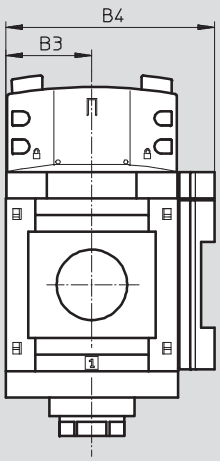

➔ Flow direction

Type	B3	B4	D4
MS12-EM-...-AG	61	148	–
MS12-EM-...-A4	61	148	G¼

Note: This product conforms to ISO 1179-1 and to ISO 228-1

Ordering data

Size	Connection	Part No.	Type
MS12	G1 ... G2[1)]	**541495**	**MS12-EM-G[2)]**

1) Connecting plate must be ordered separately as an accessory ➔ Internet: ms12-ag
2) Free of copper and PTFE

Note: This product conforms to ISO 1179-1 and to ISO 228-1

On-off valves MS12-EM, MS series

Ordering data – Modular products

FESTO

M Mandatory data					O Options				
Module No.	Series	Size	Function	Connection size	Silencer	Pressure gauge/ adapter	Alternative pressure gauge scale	Type of mount-ing	Alternative flow direction
535031	MS	12	EM	AGF AGG AGH AGI G	S	AG A4	PSI MPA	WP	Z
Order example									
535031	**MS**	**12**	**EM**	**G**	**S**	**AG**	**PSI**		**Z**

Ordering table

Grid dimension [mm]		124	Condi-tions	Code		Enter code
M	Module No.	**535031**				
	Series	Standard		**MS**		MS
	Size	12		**12**		12
	Function	On-off valve, manual		**-EM**		-EM
	Connection size	Connecting plate G1		**-AGF**		
		Connecting plate G1¼		**-AGG**		
		Connecting plate G1½		**-AGH**		
		Connecting plate G2		**-AGI**		
		Module without connecting thread, without connecting plate		**-G**		
O	Silencer	Silencer		**-S**		
	Pressure gauge/adapter	MS pressure gauge, bar		**-AG**		
		Adapter plate for EN pressure gauge ¼, without pressure gauge		**-A4**		
	Alternative pressure gauge scale	psi	1	**-PSI**		
		MPa	1	**-MPA**		
	Type of mounting	Mounting bracket	2	**-WP**		
	Alternative flow direction	Flow direction from right to left		**-Z**		

1 **PSI, MPA** Only with pressure gauge AG.

2 **WP** Only with connecting plate AGF, AGG, AGH or AGI.

Transfer order code

535031	**MS**	**12**	–	**EM**	–		–		–		–		–	

On-off valves MS12-EE, MS series

Peripherals overview

On-off valves MS12-EE

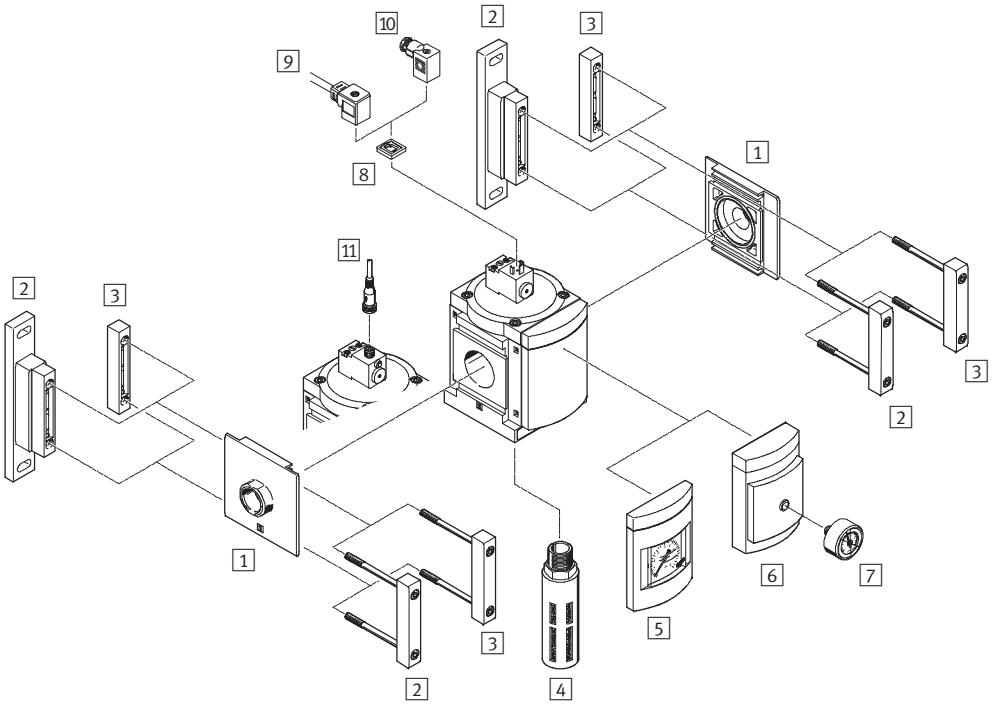

Note

Additional accessories:

– Module connector for combination with size MS9 ➔ Internet: armv

Mounting attachments and accessories

		➔ Page/Internet
1	Connecting plate MS12-AG...	ms12-ag
2	Mounting bracket MS12-WP	ms12-wp
3	Module connector MS12-MV	ms12-mv
4	Silencer U	83
5	MS pressure gauge AG	69
6	Adapter for EN pressure gauge ¼ A4	69
7	Pressure gauge MA	83
8	Illuminating seal MC-LD	82
9	Plug socket with cable KMC	82
10	Plug socket MSSD-C	82
11	Connecting cable NEBU-M12...-LE4	83

On-off valves MS12-EE, MS series

Type codes

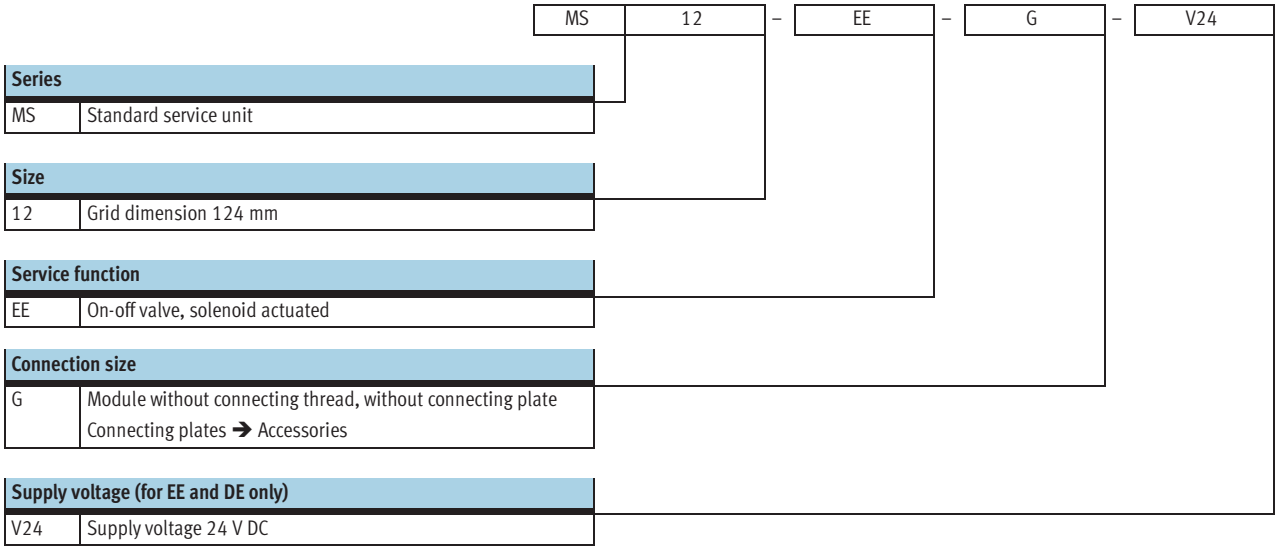

Series	
MS	Standard service unit

Size	
12	Grid dimension 124 mm

Service function	
EE	On-off valve, solenoid actuated

Connection size	
G	Module without connecting thread, without connecting plate Connecting plates ➔ Accessories

Supply voltage (for EE and DE only)	
V24	Supply voltage 24 V DC

Further variants can be ordered using the modular system ➔ 69

- Connecting plates
- Supply voltage
- Silencer
- Pressure gauge/adapter
- Alternative pressure gauge scale
- Type of mounting
- Alternative flow direction

On-off valves MS12-EE, MS series

Technical data

Function

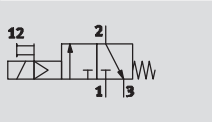

- Flow rate
  25,000 ... 32,000 l/min
- Temperature range
  –10 ... +50 °C
- Operating pressure
  3 ... 16 bar

- Solenoid actuated on-off valve for pressurising and venting pneumatic installations
- With solenoid coil without plug socket
- Three voltage ranges can be selected
- Ducted exhaust possible via a threaded connection with silencer
- Pushing manual override (except variant V24P)

General technical data				
Pneumatic connection 1, 2[1)]	G1	G1¼	G1½	G2
Pneumatic connection 3	G1			
Design	Piston spool valve			
Type of mounting	Via accessories			
	In-line installation			
Assembly position	Any			
Valve function	3/2-way valve, single solenoid, closed			
Exhaust function	Without flow control			
Type of reset	Mechanical spring			
Switching position display	Via accessories			
	LED (with variant V24P)			
Type of actuation	Direct			
Pilot air supply	Internal			
Direction of flow	Non-reversible			

1) Dependent on connecting plate selected, must be ordered separately as an accessory ➔ Internet: ms12-ag

Note: This product conforms to ISO 1179-1 and to ISO 228-1

Electrical data		
Coil characteristics	V24	24 V DC
	V24P	24 V DC
	V110	110 V AC
	V230	230 V AC
Electrical connection	V24/V110/V230	Plug, square design to EN 175301-803, type C
	V24P	Plug M12, 4-pin to DESINA
Protection class solenoid coil		IP65
Duty cycle [%]		100

Standard nominal flow rate qnN[1)] [l/min]	
In main flow direction 1 ⇢ 2	25,000 ... 32,000
In relief direction 2 ⇢ 3	8,900

1) Measured at p1 = 6 bar and Δp = 1 bar

On-off valves MS12-EE, MS series

Technical data

Operating and environmental conditions		
Operating pressure	[bar]	3 ... 16
Operating medium		Compressed air
Ambient temperature	[°C]	–10 ... +50
Temperature of medium	[°C]	–10 ... +50
Corrosion resistance	CRC[1)]	2

1) Corrosion resistance class 2 according to Festo standard 940 070
Components requiring moderate corrosion resistance. Externally visible parts with primarily decorative surface requirements which are in direct contact with a normal industrial environment or media such as coolants or lubricating agents.

Weights [g]	
On-off valve	3,800
On-off valve with silencer S	3,900

Materials

Sectional view

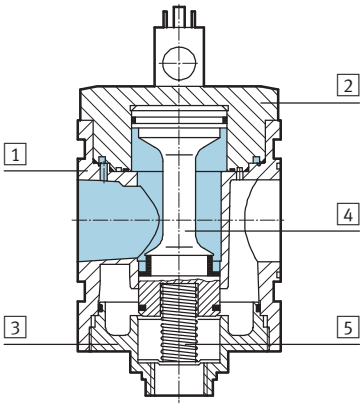

On-off valve		
1	Body	Die-cast aluminium
2	Cap, top	Aluminium
3	Cap, bottom	Aluminium
4	Valve spool	Stainless steel, polyacetate, nitrile rubber
5	Springs	Steel
–	Covers/cover plates	Polyamide
–	Seals	Nitrile rubber
	Note on materials	Free of copper and PTFE (not with variant AG)

Dimensions – Standard

Download CAD data ➔ **www.festo.com**

MS12-EE-...-V24/V110/V230

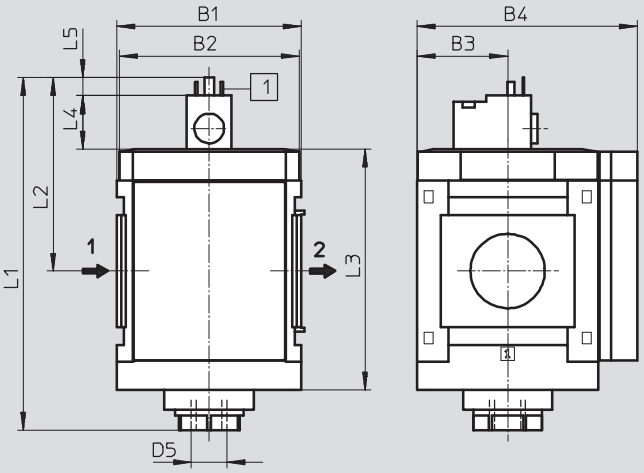

MS12-EE-...-V24P

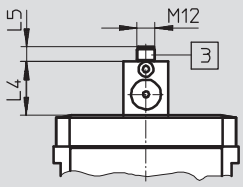

1 Plug connection to EN 175301-803
3 Plug connection M12, 4-pin to DESINA

➔ Flow direction

Type	B1	B2	B3	B4	L1	L2	L3	L4	L5	D5
MS12-EE-...-V24/V110/V230	124	122	61	148	237	130	162	35.7	12.3	G1
MS12-EE-...-V24P								36	10	

Dimensions – Silencer

Download CAD data ➔ **www.festo.com**

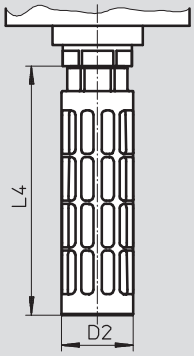

Type	D2 ∅	L4
MS12-EE-...-S	47.8	165.5

Note: This product conforms to ISO 1179-1 and to ISO 228-1

Dimensions – Pressure gauges/adapters

Download CAD data ➔ **www.festo.com**

Integrated MS pressure gauge AG, display unit [bar]

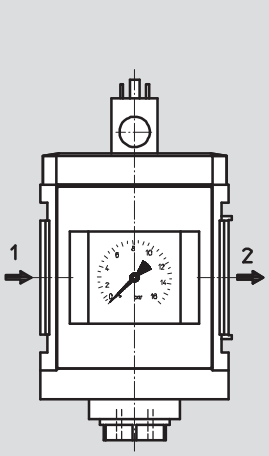

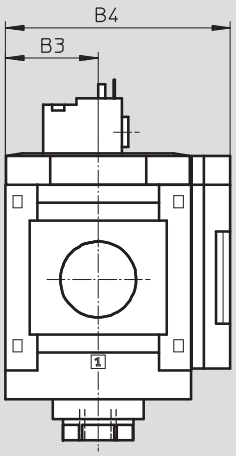

Adapter A4 for EN pressure gauge ¼, without pressure gauge

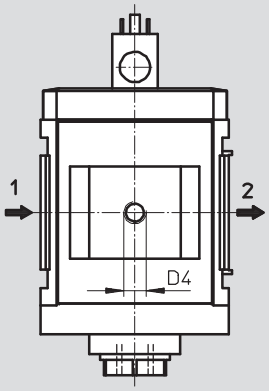

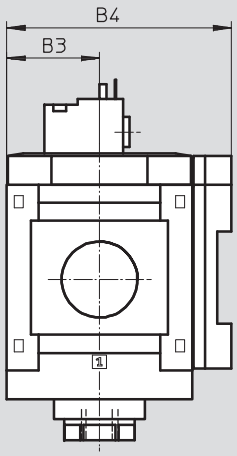

➔ Flow direction

Type	B3	B4	D4
MS12-EE-...-AG	61	148	–
MS12-EE-...-A4	61	148	G¼

Ordering data

Size	Connection	Supply voltage 24 V DC	
		Part No.	Type
MS12	G1 ... G2[1]	**541496**	**MS12-EE-G-V24**[2]

1) Connecting plate must be ordered separately as an accessory ➔ Internet: ms12-ag
2) Free of copper and PTFE

Note: This product conforms to ISO 1179-1 and to ISO 228-1

On-off valves MS12-EE, MS series

Ordering data – Modular products

FESTO

M Mandatory data						O Options				
Module No.	Series	Size	Function	Connection size	Supply voltage	Silencer	Pressure gauge/ adapter	Alternative pressure gauge scale	Type of mount-ing	Alternative flow direction
535032	MS	12	EE	AGF AGG AGH AGI G	V24 V24P V110 V230	S	AG A4	PSI MPA	WP	Z
Order example										
535032	**MS**	**12**	**EE**	**AGI**	**V110**	**S**	**AG**	**MPA**	**WP**	

Ordering table

Grid dimension [mm]		124	Condi-tions	Code		Enter code
M	Module No.	**535032**				
	Series	Standard		**MS**		MS
	Size	12		**12**		12
	Function	On-off valve, electrical		**-EE**		-EE
	Connection size	Connecting plate G1		**-AGF**		
		Connecting plate G1¼		**-AGG**		
		Connecting plate G1½		**-AGH**		
		Connecting plate G2		**-AGI**		
		Module without connecting thread, without connecting plate		**G**		
	Supply voltage	24 V DC (connection pattern to EN 175301), 16 bar		**-V24**		
		24 V DC plug (connection pattern M12 to DESINA), 16 bar		**-V24P**		
		110 V AC (connection pattern to EN 175301), 16 bar		**-V110**		
		230 V AC (connection pattern to EN 175301), 16 bar		**-V230**		
O	Silencer	Silencer		**-S**		
	Pressure gauge/adapter	MS pressure gauge, bar		**-AG**		
		Adapter plate for EN pressure gauge ¼, without pressure gauge		**-A4**		
	Alternative pressure gauge scale	psi	1	**-PSI**		
		MPa	1	**-MPA**		
	Type of mounting	Mounting bracket	2	**-WP**		
	Alternative flow direction	Flow direction from right to left		**-Z**		

1 **PSI, MPA** Only with pressure gauge AG.

2 **WP** Only with connecting plate AGF, AGG, AGH or AGI.

Transfer order code

535032	**MS**	**12**	–	**EE**	–		–		–		–		–		–		–	

Soft-start valves MS12-DL, MS series

Peripherals overview

Soft-start valves MS12-DL

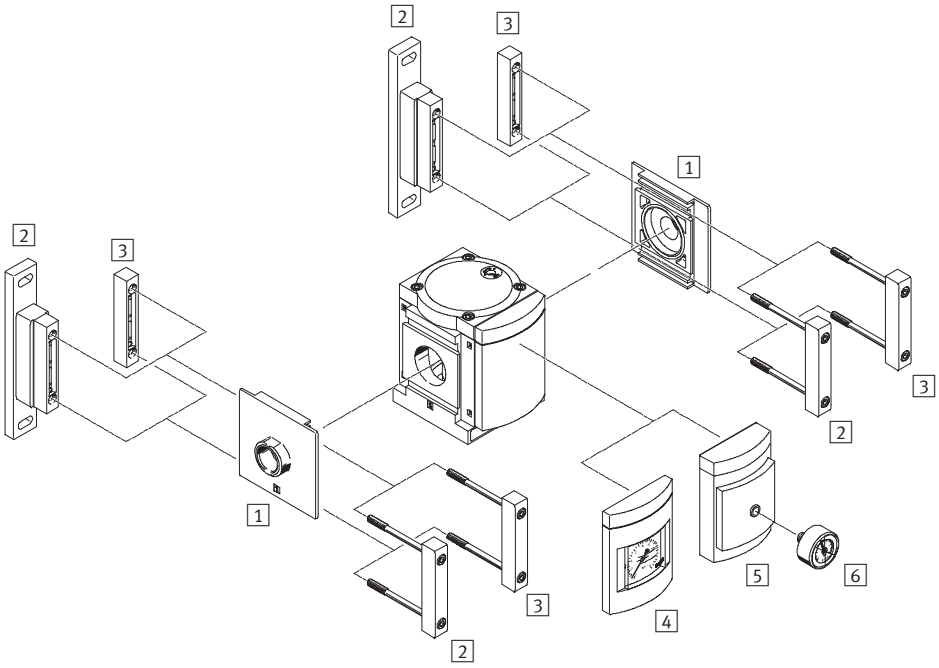

- Note

Additional accessories:

– Module connector for combination with size MS9 ➔ Internet: armv

Mounting attachments and accessories

		➔ Page/Internet
1	Connecting plate MS12-AG...	ms12-ag
2	Mounting bracket MS12-WP	ms12-wp
3	Module connector MS12-MV	ms12-mv
4	MS pressure gauge AG	75
5	Adapter for EN pressure gauge ¼ A4	75
6	Pressure gauge MA	83

Soft-start valves MS12-DL, MS series

Type codes

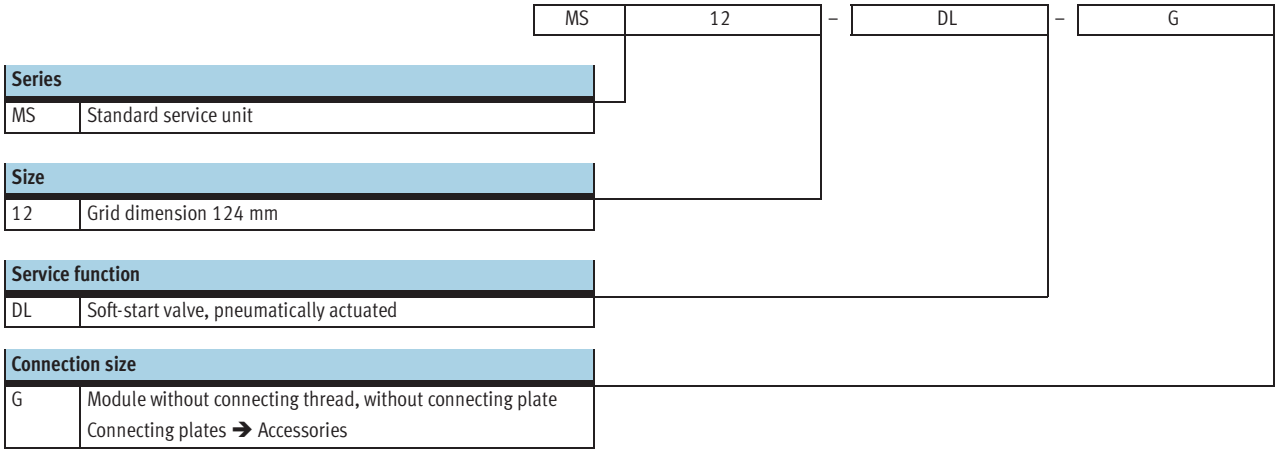

Series	
MS	Standard service unit

Size	
12	Grid dimension 124 mm

Service function	
DL	Soft-start valve, pneumatically actuated

Connection size	
G	Module without connecting thread, without connecting plate Connecting plates ➔ Accessories

Further variants can be ordered using the modular system ➔ 75

- Connecting plates
- Pressure gauge/adapter
- Alternative pressure gauge scale
- Type of mounting
- Alternative flow direction

Soft-start valves MS12-DL, MS series

Technical data

Function

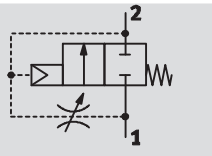

Flow rate
25,000 ... 42,000 l/min

Temperature range
–10 ... +60 °C

Operating pressure
2 ... 21 bar

The duration of the pressure build-up is adjusted using the restrictor attached to the valve cap.

The output pressure p2 rises slowly in accordance with the restrictor setting. The main seat opens when the switch-through pressure is reached.

- Pneumatically actuated soft-start valve for slowly pressurising and venting pneumatic installations (for use with on-off valves EM and EE)
- The drives advance slowly and reliably into the initial position
- Sudden and erratic movements are avoided
- Pressure switching approx. 50% of input pressure
- Adjustable switching time delay

General technical data				
Pneumatic connection 1, 2[1)]	G1	G1¼	G1½	G2
Design	Piston poppet valve			
Type of mounting	Via accessories			
	In-line installation			
Assembly position	Any			
Valve function	2/2-way valve			
Exhaust function	Flow control			
Type of reset	Mechanical spring			
Type of actuation	Direct			
Pilot air supply	Internal			
Direction of flow	Non-reversible			

1) Dependent on connecting plate selected, must be ordered separately as an accessory ➔ Internet: ms12-ag
Note: This product conforms to ISO 1179-1 and to ISO 228-1

Standard nominal flow rate qnN[1)] [l/min]	
In main flow direction 1 ⇢ 2	25,000 ... 42,000
In relief direction 2 ⇢ 1	25,000 ... 42,000

1) Measured at p1 = 6 bar and p2 = 5 bar, Δp = 1 bar

Soft-start valves MS12-DL, MS series

Technical data

Operating and environmental conditions		
Operating pressure	[bar]	2 ... 21
Operating medium		Compressed air
Ambient temperature	[°C]	–10 ... +60
Temperature of medium	[°C]	–10 ... +60
Corrosion resistance	CRC[1)]	2

1) Corrosion resistance class 2 according to Festo standard 940 070
Components requiring moderate corrosion resistance. Externally visible parts with primarily decorative surface requirements which are in direct contact with a normal industrial environment or media such as coolants or lubricating agents.

Weights [g]	
Soft-start valve	3,600

Materials

Sectional view

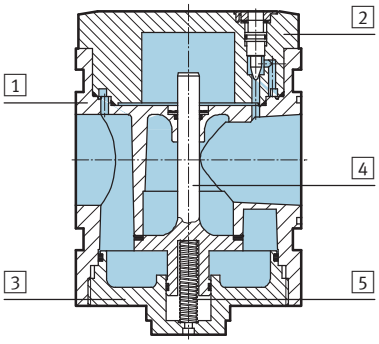

Soft-start valve		
1	Body	Die-cast aluminium
2	Cap, top	Aluminium
3	Cap, bottom	Aluminium
4	Valve stem	Aluminium, nitrile rubber
5	Springs	Steel
–	Covers/cover plates	Polyamide
–	Seals	Nitrile rubber
	Note on materials	Free of copper and PTFE (not with variant AG)

Switching point – Pressure p as a function of time t

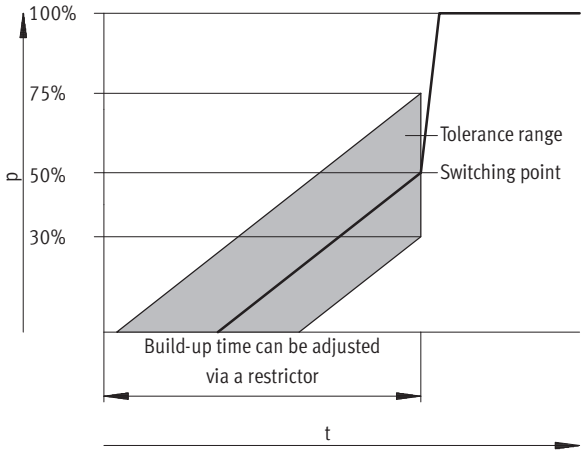

Note

The tolerance specification +25%/–20% of the switching point refers to the operating pressure p1.

Example: at an operating pressure of 4 bar a switching point of 1.2 bar to 3.0 bar is permitted.

Dimensions – Standard Download CAD data ➔ **www.festo.com**

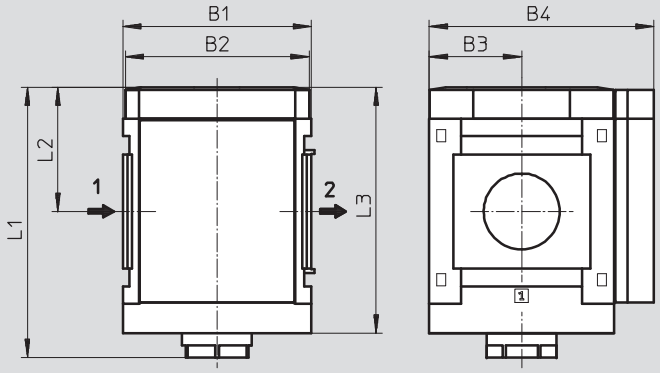

➔ Flow direction

Type	B1	B2	B3	B4	L1	L2	L3
MS12-DL	124	122	61	148	178	82	162

Note: This product conforms to ISO 1179-1 and to ISO 228-1

Dimensions – Pressure gauges/adapters Download CAD data ➔ **www.festo.com**

Integrated MS pressure gauge AG, display unit [bar]

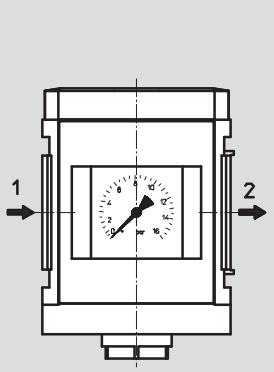

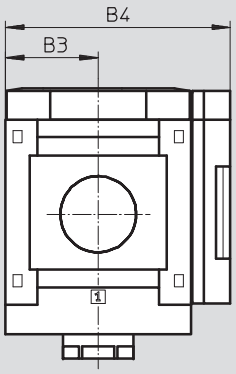

Adapter A4 for EN pressure gauge ¼, without pressure gauge

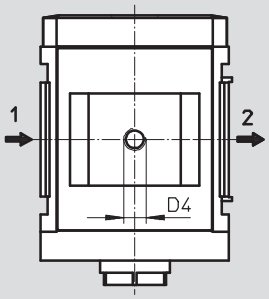

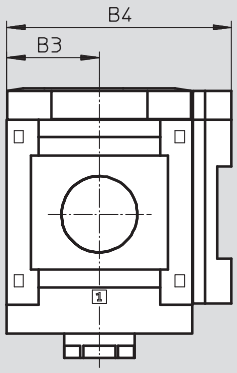

➔ Flow direction

Type	B3	B4	D4
MS12-DL-...-AG	61	148	–
MS12-DL-...-A4	61	148	G¼

Ordering data

Size	Connection	Part No.	Type
MS12	G1 ... G2[1)]	**541497**	**MS12-DL-G[2)]**

1) Connecting plate must be ordered separately as an accessory ➔ Internet: ms12-ag
2) Free of copper and PTFE

Note: This product conforms to ISO 1179-1 and to ISO 228-1

Soft-start valves MS12-DL, MS series

Ordering data – Modular products

FESTO

M Mandatory data					O Options			
Module No.	Series	Size	Function	Connection size	Pressure gauge/adapter	Alternative pressure gauge scale	Type of mounting	Alternative flow direction
535033	MS	12	DL	AGF AGG AGH AGI G	AG A4	PSI MPA	WP	Z
Order example								
535033	MS	12	– DL	– AGI	– AG	– MPA	– WP	– Z

Ordering table

Grid dimension [mm]		124	Conditions	Code		Enter code
M	Module No.	**535033**				
	Series	Standard		**MS**		MS
	Size	12		**12**		12
	Function	Soft-start valve, pneumatic		**-DL**		-DL
	Connection size	Connecting plate G1		**-AGF**		
		Connecting plate G1¼		**-AGG**		
		Connecting plate G1½		**-AGH**		
		Connecting plate G2		**-AGI**		
		Module without connecting thread, without connecting plate		**-G**		
O	Pressure gauge/adapter	MS pressure gauge, bar		**-AG**		
		Adapter plate for EN pressure gauge ¼, without pressure gauge		**-A4**		
	Alternative pressure gauge scale	psi	1	**-PSI**		
		MPa	1	**-MPA**		
	Type of mounting	Mounting bracket	2	**-WP**		
	Alternative flow direction	Flow direction from right to left		**-Z**		

1 **PSI, MPA** Only with pressure gauge AG.

2 **WP** Only with connecting plate AGF, AGG, AGH or AGI.

Transfer order code

535033	MS	12	– DL	–	–	–	–	–

Soft-start valves MS12-DE, MS series

Peripherals overview

Soft-start valves MS12-DE

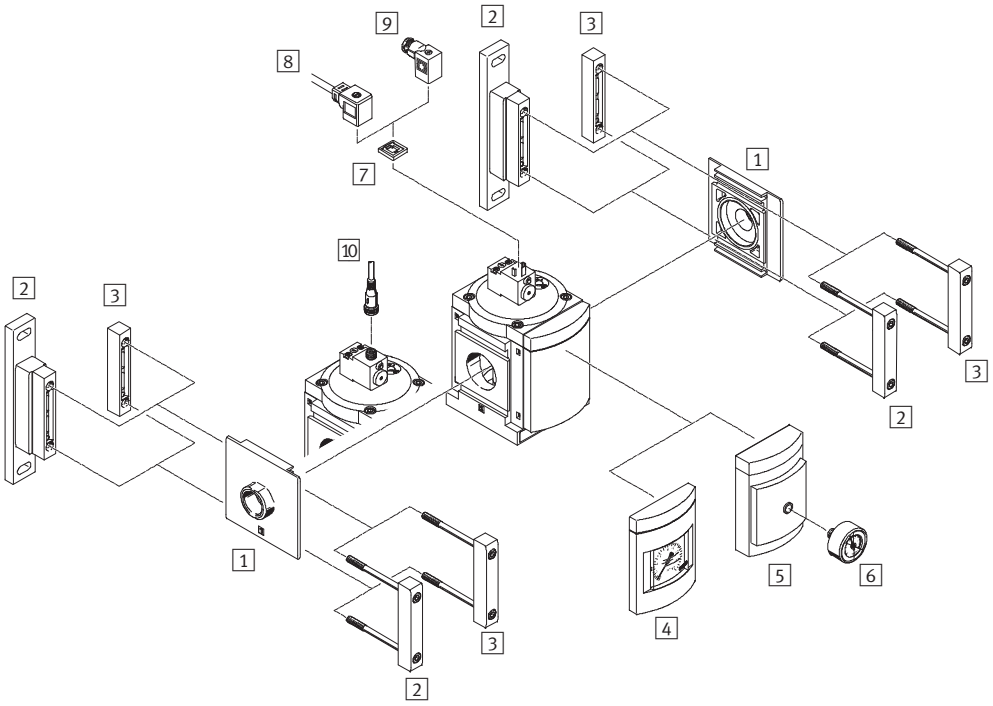

- Note

Additional accessories:

– Module connector for combination with size MS9 ➔ Internet: armv

Mounting attachments and accessories

		➔ Page/Internet
1	Connecting plate MS12-AG...	ms12-ag
2	Mounting bracket MS12-WP	ms12-wp
3	Module connector MS12-MV	ms12-mv
4	MS pressure gauge AG	81
5	Adapter for EN pressure gauge ¼ A4	81
6	Pressure gauge MA	83
7	Illuminating seal MC-LD	82
8	Plug socket with cable KMC	82
9	Plug socket MSSD-C	82
10	Connecting cable NEBU-M12...-LE4	83

Soft-start valves MS12-DE, MS series

Type codes

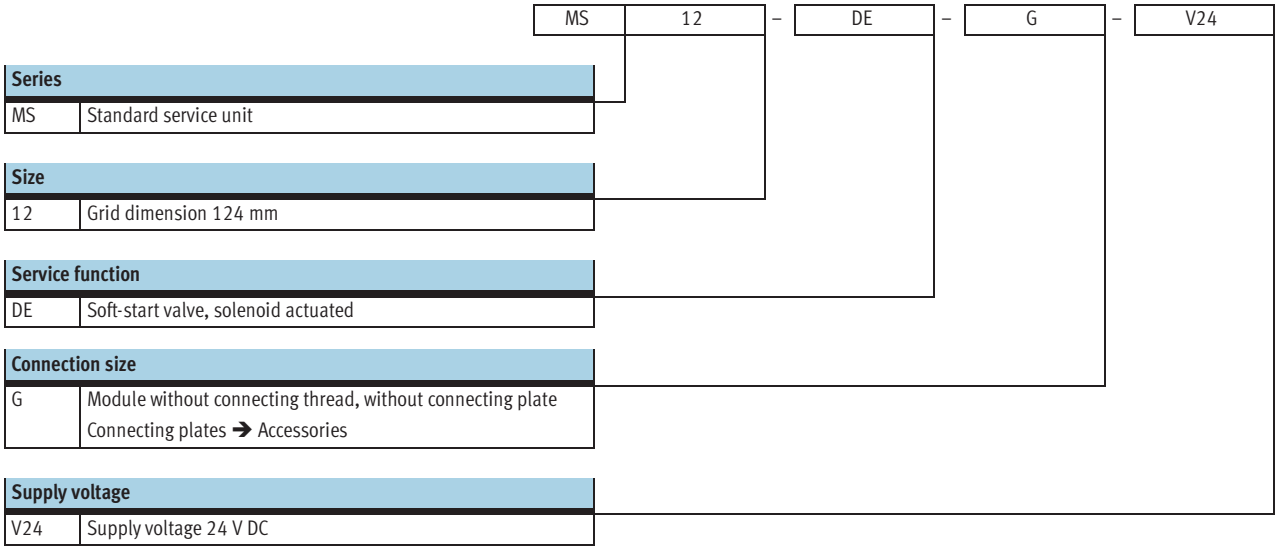

Further variants can be ordered using the modular system ➔ 81

- Connecting plates
- Supply voltage
- Pressure gauge/adapter
- Alternative pressure gauge scale
- Type of mounting
- Alternative flow direction

Soft-start valves MS12-DE, MS series

Technical data

Function

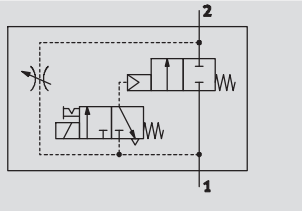

Flow rate
25,000 ... 42,000 l/min

Temperature range
–10 ... +50 °C

Operating pressure
3 ... 16 bar

The duration of the pressure build-up is adjusted using the restrictor attached to the valve cap.
The output pressure p2 rises slowly in accordance with the restrictor setting. Only the air flow from the restrictor is available when the solenoid valve is not actuated. The main seat is only opened by energising the solenoid valve.

When the solenoid valve is switched off, the main seat is closed and only the air flow from the flow control valve is available.
The solenoid valve should remain switched on in order to vent a system as this increases the flow rate from 2 and 1 and reduces the exhaust time.

- Solenoid actuated soft-start valve for slowly pressurising and venting pneumatic installations
- The drives advance slowly and reliably into the initial position
- Sudden and erratic movements are avoided
- With solenoid coil without plug socket
- Switch-through pressure can be exactly controlled using a solenoid valve
- Adjustable switching time delay
- Three voltage ranges can be selected
- Pushing manual override (except variant V24P)

General technical data					
Pneumatic connection 1, 2[1)]	G1	G1¼	G1½	G2	
Design	Piston poppet valve				
Type of mounting	Via accessories				
	In-line installation				
Assembly position	Any				
Valve function	2/2-way valve				
Exhaust function	Flow control				
Type of reset	Mechanical spring				
Switching position display	Via accessories				
	LED (with variant V24P)				
Type of actuation	Piloted				
Pilot air supply	Internal				
Direction of flow	Non-reversible				

1) Dependent on connecting plate selected, must be ordered separately as an accessory ➔ Internet: ms12-ag
Note: This product conforms to ISO 1179-1 and to ISO 228-1

Electrical data		
Coil characteristics	V24	24 V DC
	V24P	24 V DC
	V110	110 V AC
	V230	230 V AC
Electrical connection	V24/V110/V230	Plug, square design to EN 175301-803, type C
	V24P	Plug M12, 4-pin to DESINA
Protection class solenoid coil		IP65
Duty cycle [%]		100

Soft-start valves MS12-DE, MS series

Technical data

Standard nominal flow rate qnN[1] [l/min]	
In main flow direction 1 → 2	25,000 ... 42,000
In relief direction 2 → 1[2]	25,000 ... 42,000

1) Measured at p1 = 6 bar and p2 = 5 bar, Δp = 1 bar
2) For energised solenoid valve

Operating and environmental conditions		
Operating pressure	[bar]	3 ... 16
Operating medium		Compressed air
Ambient temperature	[°C]	–10 ... +50
Temperature of medium	[°C]	–10 ... +50
Corrosion resistance	CRC[1]	2

1) Corrosion resistance class 2 according to Festo standard 940 070
Components requiring moderate corrosion resistance. Externally visible parts with primarily decorative surface requirements which are in direct contact with a normal industrial environment or media such as coolants or lubricating agents.

Weights [g]	
Soft-start valve	3,800

Materials

Sectional view

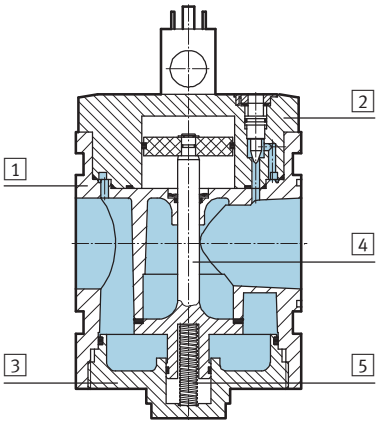

Soft-start valve		
1	Body	Die-cast aluminium
2	Cap, top	Aluminium
3	Cap, bottom	Aluminium
4	Valve stem	Aluminium, nitrile rubber
5	Springs	Steel
–	Covers/cover plates	Polyamide
–	Seals	Nitrile rubber
	Note on materials	Free of copper and PTFE (not with variant AG)

Soft-start valves MS12-DE, MS series

Technical data

Dimensions – Standard

Download CAD data ➔ **www.festo.com**

MS12-DE-...-V24/V110/V230

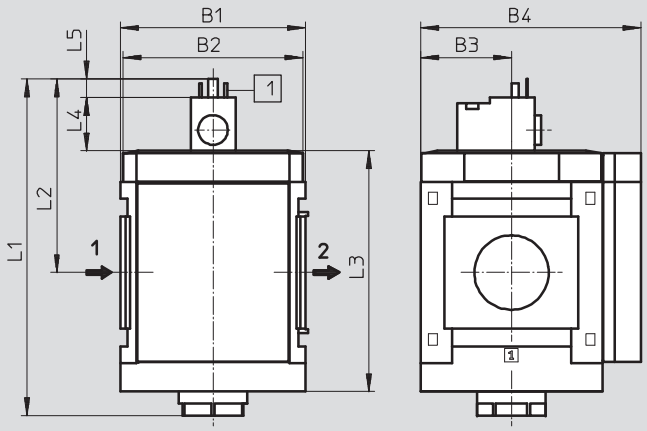

MS12-DE-...-V24P

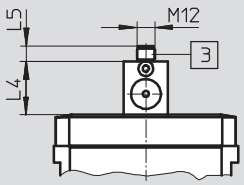

1 Plug connection to EN 175301-803

3 Plug connection M12, 4-pin to DESINA

➔ Flow direction

Type	B1	B2	B3	B4	L1	L2	L3	L4	L5
MS12-DE-...-V24/V110/V230	124	122	61	148	226	130	162	35.7	12.3
MS12-DE-...-V24P								36	10

Note: This product conforms to ISO 1179-1 and to ISO 228-1

Dimensions – Pressure gauges/adapters

Download CAD data ➔ **www.festo.com**

Integrated MS pressure gauge AG, display unit [bar]

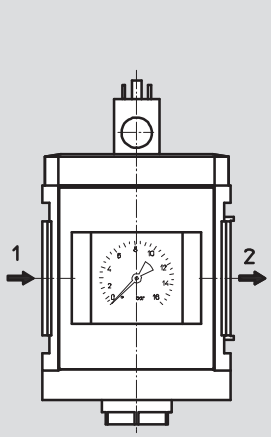

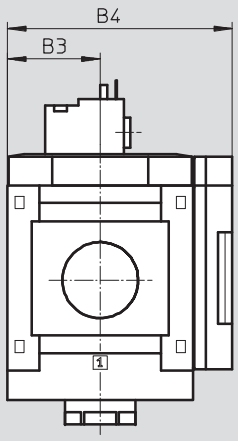

Adapter A4 for EN pressure gauge ¼, without pressure gauge

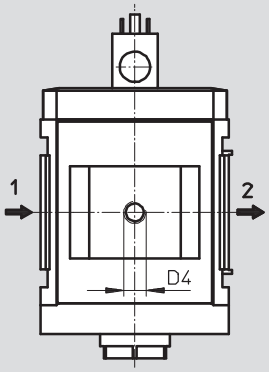

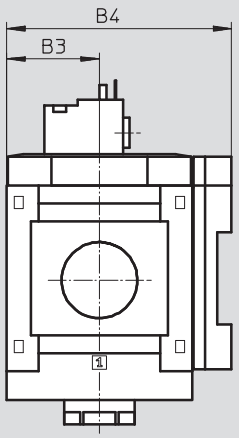

➔ Flow direction

Type	B3	B4	D4
MS12-DE-...-AG	61	148	–
MS12-DE-...-A4	61	148	G¼

Ordering data

Size	Connection	Supply voltage 24 V DC	
		Part No.	Type
MS12	G1 ... G2[1)]	**541498**	**MS12-DE-G-V24**[2)]

1) Connecting plate must be ordered separately as an accessory ➔ Internet: ms12-ag

2) Free of copper and PTFE

Note: This product conforms to ISO 1179-1 and to ISO 228-1

Soft-start valves MS12-DE, MS series

Ordering data – Modular products

FESTO

M Mandatory data						O Options			
Module No.	Series	Size	Function	Connection size	Supply voltage	Pressure gauge/ adapter	Alternative pressure gauge scale	Type of mounting	Alternative flow direction
535034	MS	12	DE	AGF AGG AGH AGI G	V24 V24P V110 V230	AG A4	PSI MPA	WP	Z
Order example									
535034	**MS**	**12**	**DE**	**AGH**	**V230**	**A4**		**WP**	**Z**

Ordering table

Grid dimension [mm]		124	Conditions	Code		Enter code
M	Module No.	**535034**				
	Series	Standard		**MS**		MS
	Size	12		**12**		12
	Function	Soft-start valve, electrical		**-DE**		-DE
	Connection size	Connecting plate G1		**-AGF**		
		Connecting plate G1¼		**-AGG**		
		Connecting plate G1½		**-AGH**		
		Connecting plate G2		**-AGI**		
		Module without connecting thread, without connecting plate		**-G**		
	Supply voltage	24 V DC (connection pattern to EN 175301), 16 bar		**-V24**		
		24 V DC plug (connection pattern M12 to DESINA), 16 bar		**-V24P**		
		110 V AC (connection pattern to EN 175301), 16 bar		**-V110**		
		230 V AC (connection pattern to EN 175301), 16 bar		**-V230**		
O	Pressure gauge/adapter	MS pressure gauge, bar		**-AG**		
		Adapter plate for EN pressure gauge ¼, without pressure gauge		**-A4**		
	Alternative pressure gauge scale	psi	1	**-PSI**		
		MPa	1	**-MPA**		
	Type of mounting	Mounting bracket	2	**-WP**		
	Alternative flow direction	Flow direction from right to left		**-Z**		

1 **PSI, MPA** Only with pressure gauge AG.

2 **WP** Only with connecting plate AGF, AGG, AGH or AGI.

Transfer order code

535034	**MS**	**12**	–	**DE**	–		–		–		–		–		–	

Ordering data – Plug socket MSSD — Technical data ➔ Internet: mssd

	Description	Operating voltage range	Electrical connection	Type of mounting cable connection	Part No.	Type
	for MS4/6-EE/DE	≤ 250 V AC/DC	3-pin	Clamping screws	**151687**	**MSSD-EB**
			4-pin	Insulation displacement technology	**192745**	**MSSD-EB-S-M14**
	for MS12-EE/DE	≤ 250 V AC/DC	3-pin	Clamping screws	**34583**	**MSSD-C**
			4-pin	Insulation displacement technology	**192748**	**MSSD-C-S-M16**

Ordering data – Plug socket with cable KMEB/KMC — Technical data ➔ Internet: kmeb, kmc

	Description	Operating voltage range	Electrical connection	Switching status display	Cable length [m]	Part No.	Type
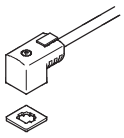	for MS4/6-EE/DE	24 V DC	2-pin	LED	2.5	**547268**	**KMEB-3-24-2,5-LED**
					5	**547269**	**KMEB-3-24-5-LED**
				–	2.5	**547270**	**KMEB-3-24-2,5**
					5	**547271**	**KMEB-3-24-5**
			3-pin	LED	2.5	**151688**	**KMEB-1-24-2,5-LED**
					5	**151689**	**KMEB-1-24-5-LED**
					10	**193457**	**KMEB-1-24-10-LED**
		230 V AC	3-pin	–	2.5	**151690**	**KMEB-1-230AC-2,5**
					5	**151691**	**KMEB-1-230AC-5**
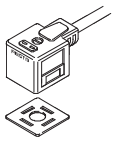	for MS12-EE/DE	24 V DC	3-pin	LED	2.5	**30931**	**KMC-1-24DC-2,5-LED**
					5	**30933**	**KMC-1-24DC-5-LED**
					10	**193459**	**KMC-1-24-10-LED**
		230 V AC	3-pin	–	2.5	**30932**	**KMC-1-230AC-2,5**
					5	**30934**	**KMC-1-230AC-5**

Ordering data – Illuminating seal MEB-LD/MC-LD — Technical data ➔ Internet: meb, mc

	Description	Operating voltage range	Part No.	Type
	for plug socket with cable KMEB and plug socket MSSD-EB	12 ... 24 V DC	**151717**	**MEB-LD-12-24DC**
		230 V DC/AC ±10%	**151718**	**MEB-LD-230AC**
	for plug socket with cable KMC and plug socket MSSD-C	12 ... 24 V DC	**19145**	**MC-LD-12-24DC**
		230 V DC/AC ±10%	**19146**	**MC-LD-230AC**

Ordering data – Locking clip CPV18-HV — Technical data ➔ Internet: cpv18-hv

	Description	Part No.	Type	PU[1]
	for MS4/6-EE/DE-...-V24	**530056**	**CPV18-HV**	**10**

1) Packaging unit quantity

Ordering data – Connecting cable NEBU-M8 — Technical data ➔ Internet: nebu

	Electrical connection	Number of wires	Cable length [m]	Part No.	Type
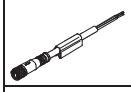	M8x1, straight socket	3	2.5	**541333**	**NEBU-M8G3-K-2.5-LE3**
			5	**541334**	**NEBU-M8G3-K-5-LE3**
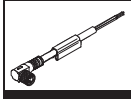	M8x1, angled socket	3	2.5	**541338**	**NEBU-M8W3-K-2.5-LE3**
			5	**541341**	**NEBU-M8W3-K-5-LE3**

Ordering data – Connecting cable NEBU-M12 — Technical data ➔ Internet: nebu

	Electrical connection	Number of wires	Cable length [m]	Part No.	Type
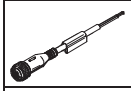	M12x1, straight socket	4	2.5	**550326**	**NEBU-M12G5-K-2.5-LE4**
			5	**541328**	**NEBU-M12G5-K-5-LE4**
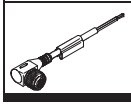	M12x1, angled socket	4	2.5	**550325**	**NEBU-M12W5-K-2.5-LE4**
			5	**541329**	**NEBU-M12W5-K-5-LE4**

Ordering data – Silencer U — Technical data ➔ Internet: u

	Description	Pneumatic connection	Part No.	Type
	for MS4-EM1/EE	G¼	**6842**	**U-¼-B**
	for MS6-EM1/EE	G½	**6844**	**U-½-B**
	for MS12-EM/EE	G1	**151990**	**U-1-B**

Ordering data – Pressure gauge MA

	Nominal size	Pneumatic connection	Indicating range [bar]	Indicating range [psi]	Part No.	Type
	Pressure gauge MA, DIN EN 837-1					Technical data ➔ Internet: ma
	40	G¼	0 ... 16	0 ... 232	**183901**	**MA-40-16-G¼-EN**
	Pressure gauge MA, DIN EN 837-1, with red-green range					Technical data ➔ Internet: ma
	40	R⅛	0 ... 16	–	**525726**	**MA-40-16-R⅛-E-RG**
	50	R¼	0 ... 16	–	**525729**	**MA-50-16-R¼-E-RG**

Ordering data – Padlock LRVS-D

	Weight [g]	Part No.	Type
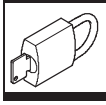	120	**193786**	**LRVS-D**