Water trap MS9-LWS

FESTO

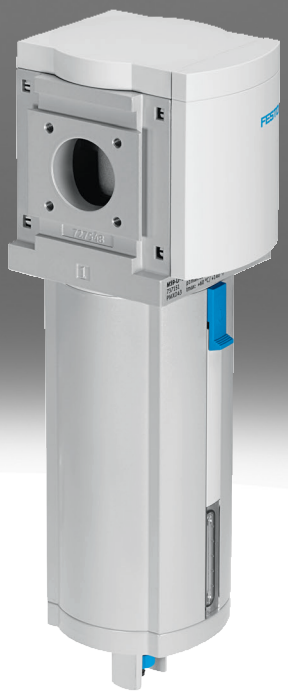

Characteristics

At a glance

The water separator removes condensate from the compressed air.
- Constantly high condensate separation (99%) up to the maximum flow rate
- Shell protection by means of integrated metal shell.
- Available with fully automatic or fully automatic, electrically actuated condensate drain
- Optional device variant EX4 for use in potentially explosive areas of zones 1, 2, 21 and 22
- Product complies with ISO 1179-1 and ISO 228-1

Ordering data - modular system

Link ms9-lws

Configurable product
This product and all its product options can be ordered online via the configurator.

Diagrams

Link ms9-lws

The diagrams shown in this document are also available online. There, it is possible to display precise values.

Function

[LWS]	Water trap

The centrifugal separator removes condensate from compressed air. It has a high separation efficiency, which protects the downstream pneumatic components from moisture, corrosion, and malfunctions.

Pneumatic connection

Depending on the size, different connection types can be selected:
- Individual fittings that are fastened via an internal thread
- Connecting plates with internal thread connection
- Module without connecting thread, without sub-base

Condensate drains

The condensate is drained by a fully automatic condensate drain valve with float actuation or a fully automatic electric condensate drain valve.

Type of mounting

[WP]	Mounting bracket standard design



- For wall mounting a single device or a service unit combination

[WBM]	Mounting centrally at rear (wall mounting top), sub-bases not required



- For wall mounting of a single device or a service unit combination (without EU approval for sub-base mounting)

Characteristics

[WPB]	Mounting bracket for large wall gap



- For wall mounting a single device or a service unit combination

EX certification EU

Optional device variant EX4 for use in potentially explosive areas of zones 1, 2, 21 and 22

UL certification

Optional device variant UL1, which meets the safety requirements for the Canadian and US markets.

Flow direction

Available with opposite flow direction.

Type code

001	Series	
MS	MS series	

002	Size	
9	Width dimension 90 mm	

003	Function	
LWS	Water trap	

004	Pneumatic connection	
3/4	Internal thread G3/4	
1	Internal thread G1	
AGD	Sub-base G1/2	
AGE	Sub-base G3/4	
AGF	Sub-base G1	
AGG	Sub-base G1 1/4	
AGH	Sub-base G1 1/2	
AQR	Sub-base 1/2 NPT	
AQS	Sub-base 3/4 NPT	
AQT	Sub-base 1 NPT	
AQU	Sub-base 1 1/4 NPT	
AQV	Sub-base 1 1/2 NPT	
G	Module without connecting thread, without sub-base	
N3/4	Internal thread 3/4 NPT	
N1	Internal thread 1 NPT	

005	Bowl type	
U	Aluminum	

006	Condensate drain	
E2	External fully automatic condensate drain, electric, 110 VAC, connection terminals	
E3	External fully automatic condensate drain, electric, 230 VAC, connection terminals	
E4	External fully automatic condensate drain, electric, 24 V DC, connection terminals	
V	Fully automatic, normally open	
VC	Fully automatic, normally closed	

007	Type of mounting	
	Without mounting bracket	
WP	Mounting bracket standard design	
WPB	Mounting bracket for large wall gap	
WPM	Mounting bracket for hooking in air preparation units	

008	EX certification EU	
	None	
EX4	II 2GD	

009	UL certification	
	None	
UL1	cULus ordinary location for Canada and USA	

010	Flow direction	
	Flow direction from left to right	
Z	Flow direction from right to left	

Datasheet

General technical data

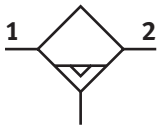

Pneumatic connection 1 [1]	–
Pneumatic connection 2 [2]	–
Size	9
Structural design	Centrifugal separator
Type of mounting	Alternatively: In-line installation With accessories
Mounting position	Vertical ±5°
Air quality class at the output	Compressed air as per ISO 8573-1:2010 [-:7:4]
Bowl guard	Integrated as metal bowl
Condensate drain	Fully automatic, Fully automatic, electrically controlled, Manual, non-detenting
Degree of condensate separation	99%
Max. condensate volume	220 ml

1) Via internal thread: G3/4, G1, NPT3/4 or NPT1; via sub-base [AG...]: G1/2, G3/4, G1, G1 1/4 or G1 1/2; [AQ...]: NPT1/2, NPT3/4, NPT1, NPT1 1/4or NPT1 1/2; as module without connecting thread/plate [G]: -
2) Via internal thread: G3/4, G1, NPT3/4 or NPT1; via sub-base [AG...]: G1/2, G3/4, G1, G1 1/4 or G1 1/2; [AQ...]: NPT1/2, NPT3/4, NPT1, NPT1 1/4or NPT1 1/2; as module without connecting thread/plate [G]: -

Standard nominal flow rate qnN

Normal nominal flow rate (normalized to DIN 1343)[1]	12,000 ... 15,000 l/min

1) G3/4, NPT3/4: 12000 l/min ±15%; G1, NPT1; module without connection thread and without sub-base: 15000 l/min ±15%; Measured at p1 = 6 bar and Δp = 1 bar

Operating and ambient conditions

Condensate drain	Fully automatic
Operating pressure	2 ... 12 bar
Operating medium	Compressed air as per ISO 8573-1:2010 [-:7:4]
Ambient temperature	-10 ... 60°C
Temperature of medium	-10 ... 60°C
Storage temperature	5 ... 60°C
Corrosion resistance class (CRC) [1]	2 - Moderate corrosion stress

1) Further information, visit www.festo.com/x/topic/kbk

Operating and environmental conditions – fully automatic, electrically controlled condensate drain [E2], [E3], [E4]

Condensate drain	Fully automatic, Fully automatic, electrically controlled, Manual, non-detenting
Operating pressure	0.8 ... 16 bar
Operating medium	Compressed air as per ISO 8573-1:2010 [-:7:4]
Ambient temperature	-10 ... 60°C
Temperature of medium	-10 ... 60°C
Storage temperature	1 ... 60°C
Corrosion resistance class (CRC) [1]	2 - Moderate corrosion stress
Certification [3]	c UL us - recognized (OL)

1) Additional information at www.festo.com/x/topic/kbk
3) Additional information www.festo.com/catalogue/ms9-lws → Support/Downloads.

Datasheet

ATEX	
ATEX category gas	II 2G
Type of ignition protection for gas	Ex h IIC T6 Gb X
ATEX category for dust	II 2D
Type of (ignition) protection for dust	Ex h IIIC T60°C Db X
Explosive ambient temperature	+5°C <= Ta <= +60°C
CE marking (see declaration of conformity) [1]	as per EU explosion protection directive (ATEX)
UKCA marking (see declaration of conformity)[2]	acc. to UK EX instructions

1) More information www.festo.com/catalogue/ms9-lws → Support/Downloads.
2) More information www.festo.com/catalogue/ms9-lws → Support/Downloads.

Weights	
Product weight [1]	2,000 g

1) Water separator with electrically actuated condensate drain, fully automatic [E2], [E3], [E4]: 2400 g

Materials	
Housing material	Die-cast aluminum
Material of bowl	Wrought aluminum alloy
Inspection window material	PA
Covering material	PA-reinforced
Material of spin disc	POM
Material of sub-base	Die-cast aluminum
Material of mounting bracket	Die-cast aluminum
Module connector material	Die-cast aluminum
Shell sealing material	NBR
Separating disc material	POM
Note on materials	RoHS compliant
LABS (PWIS) conformity	VDMA24364-B1/B2-L

Standard flow rate qn as a function of differential pressure p1-2 – pneumatic connection G3/4, NPT3/4

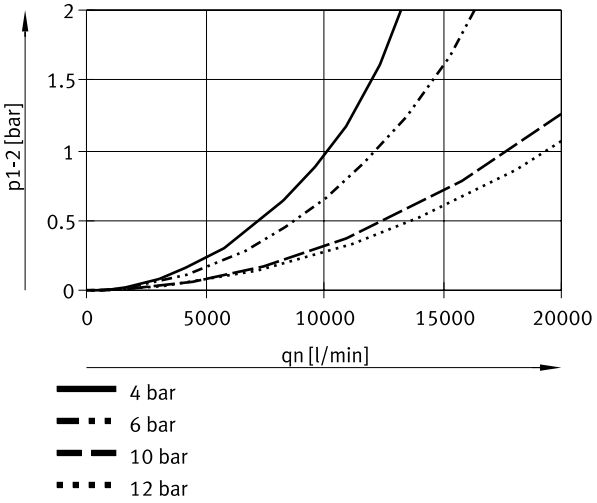

Datasheet

Standard flow rate qn as a function of differential pressure p1-2 – pneumatic connection G1, NPT1

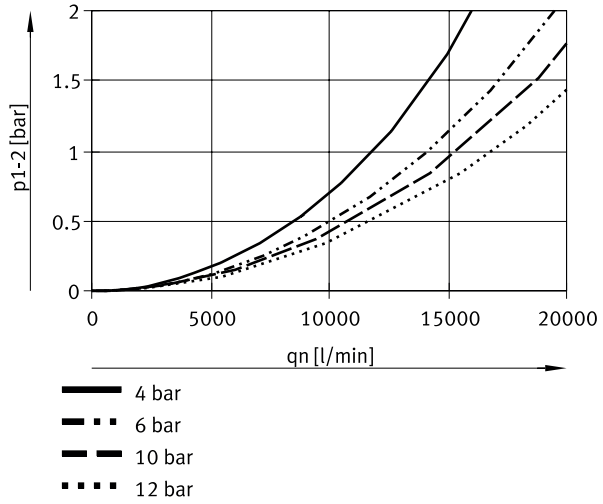

Dimensions

Dimensions – Module without connecting thread, without sub-base G, [V]
Condensate drain, fully automatic

Download CAD data www.festo.com

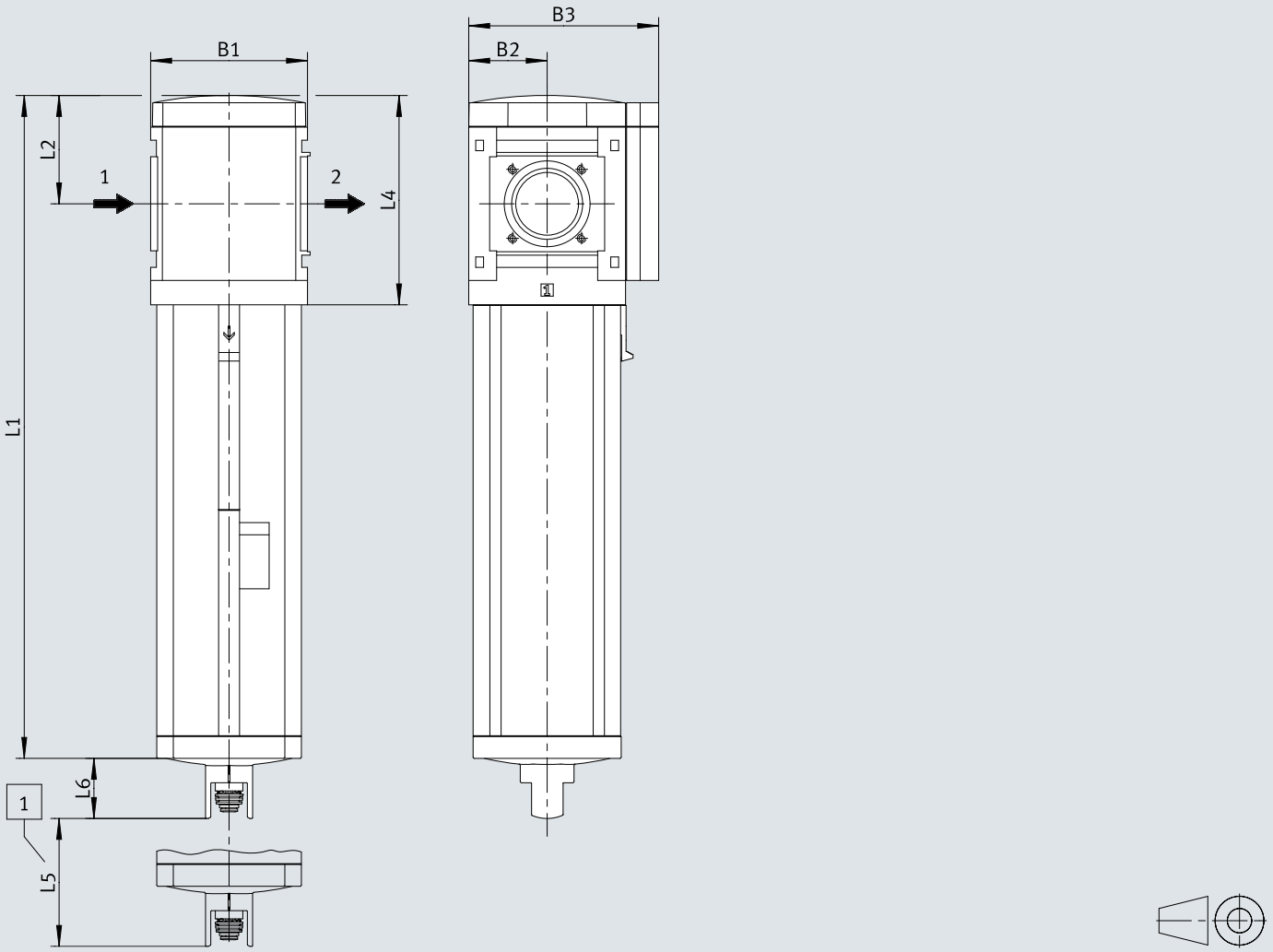

[1] Installation dimension

	B1	B2	B3	L1	L2	L4	L5	L6
MS9-LWS-G	90	45	109	310,5	62	120	50	34,5

Dimensions

Dimensions – With internal thread Download CAD data www.festo.com

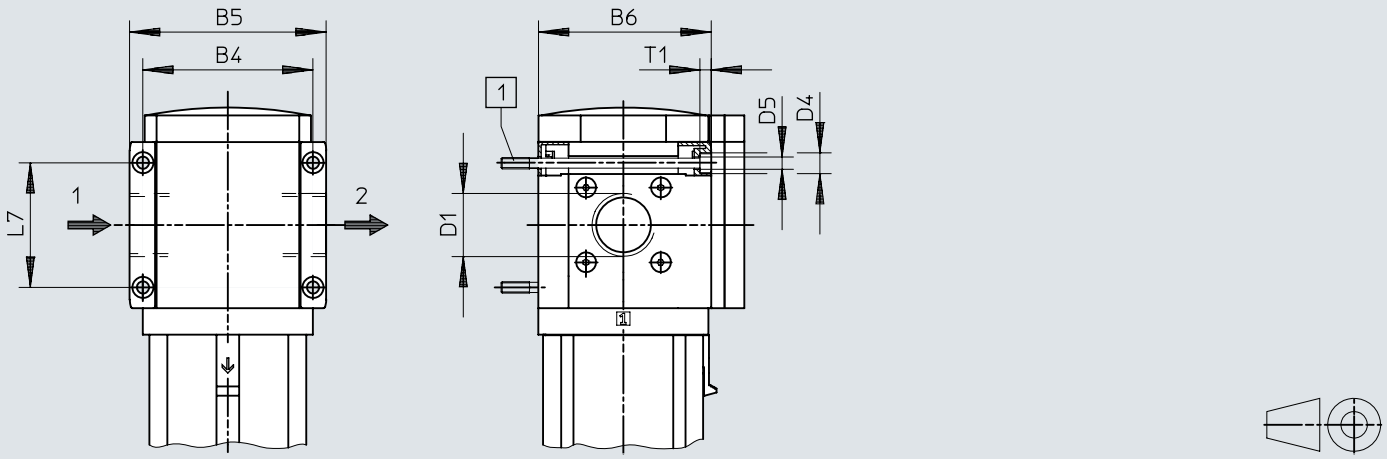

[1] Retaining screw M6xmin.90 according to DIN 912 (not in scope of delivery) for wall mounting without mounting bracket

	B7		B8	D1	L8	⫩
		EX4			EX4	
MS9-LWS-AGD	112	122	132	G1/2	35	30
MS9-LWS-AGE			132	G3/4		36
MS9-LWS-AGF			142	G1		41
MS9-LWS-AGG			162	G1 1/4		50
MS9-LWS-AGH			176	G1 1/2		55
MS9-LWS-AQR	112	122	132	NPT1/2-14	35	30
MS9-LWS-AQS			132	NPT3/4-14		36
MS9-LWS-AQT			142	NPT1-11 1/2		41
MS9-LWS-AQU			162	NPT1 1/4-11 1/2		50
MS9-LWS-AQV			176	NPT1 1/2-11 1/2		55

Dimensions

Dimensions – with connecting plate AG.../AQ... Download CAD data www.festo.com

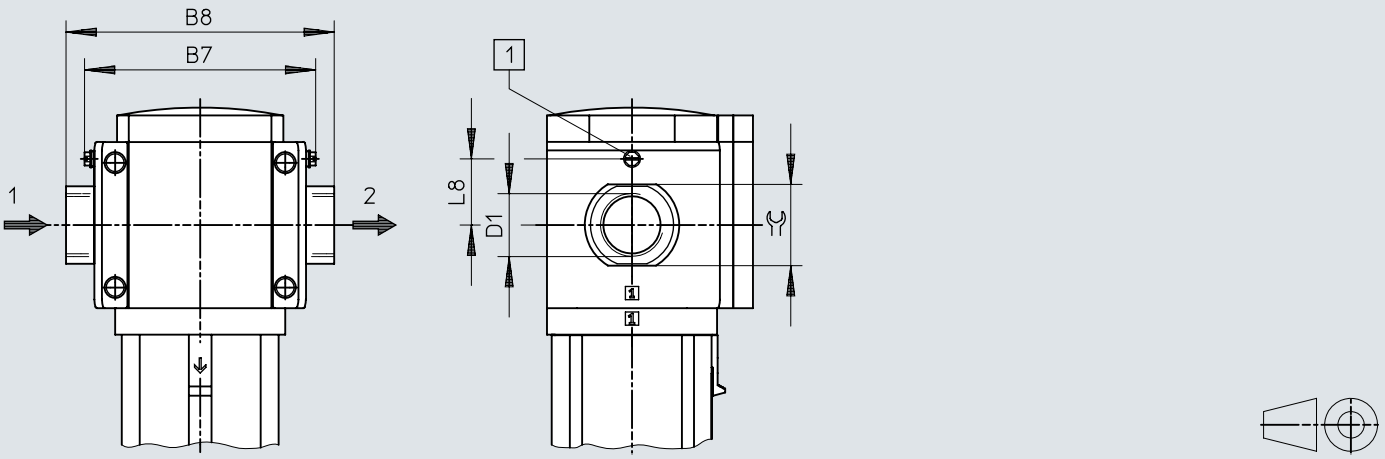

[1] Grounding screw M4x8 (only for MS9-...-EX4)

	B4	B5	B6	D1	D4	D5	L7	T1
MS9-LWS-3/4	90	104	91,5	G3/4	11	6,5	66	6
MS9-LWS-1				G1				
MS9-LWS-N3/4	90	104	91,5	NPT3/4-14	11	6,5	66	6
MS9-LWS-N1				NPT1-11 1/2				

Dimensions

Dimensions – [V] Condensate drain fully automatic Download CAD data www.festo.com

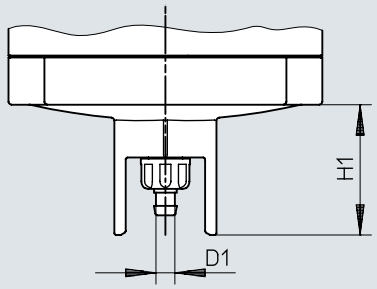

	D1	H1
MS9-LWS-...-V	5,6	34,5

Dimensions

Dimensions – [E2]/[E3]/[E4] fully automatic, electrically actuated Download CAD data www.festo.com

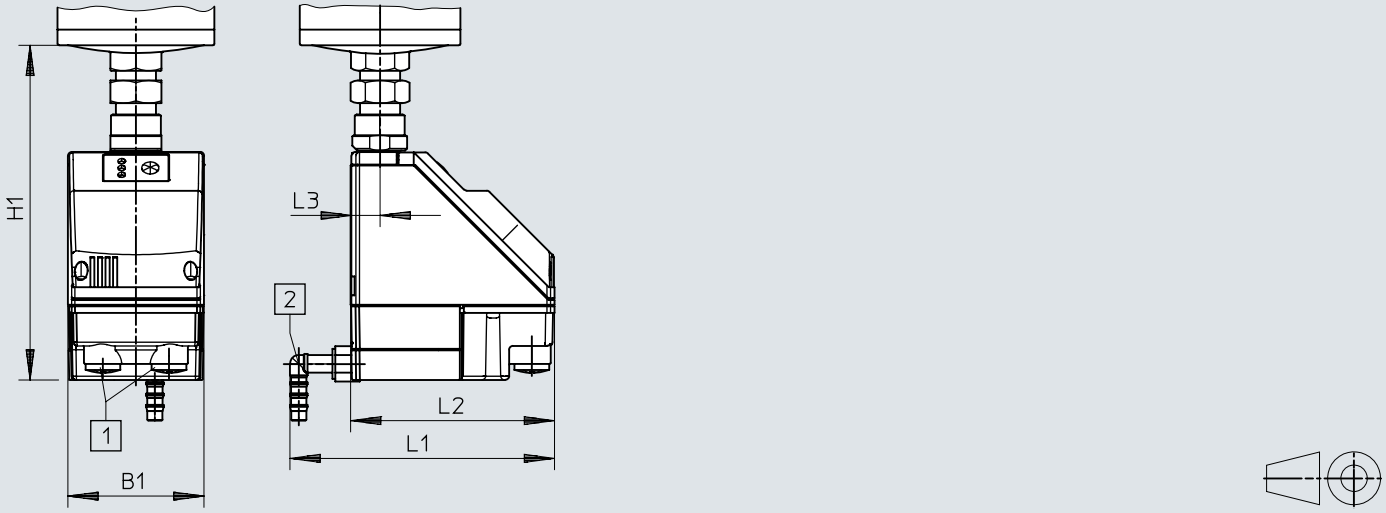

[1] Electrical connection screw terminal PG9
[2] Connection 360° swiveling for plastic hose PUN-H-12x2

	B1	H1	L1	L2	L3
MS9-LWS-...-E2/E3/E4	72	178	140	108	15

Ordering data

Ordering data



Size	Condensate drain	Product weight	Part no.	Type
9	Fully automatic	2,000 g	**571468**	**MS9-LWS-G-U-V**

Ordering data – Modular product system

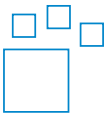

Type code	Part no.	Type
MS9-LWS	**567857**	**MS9-LWS**

Peripherals overview

Peripherals overview

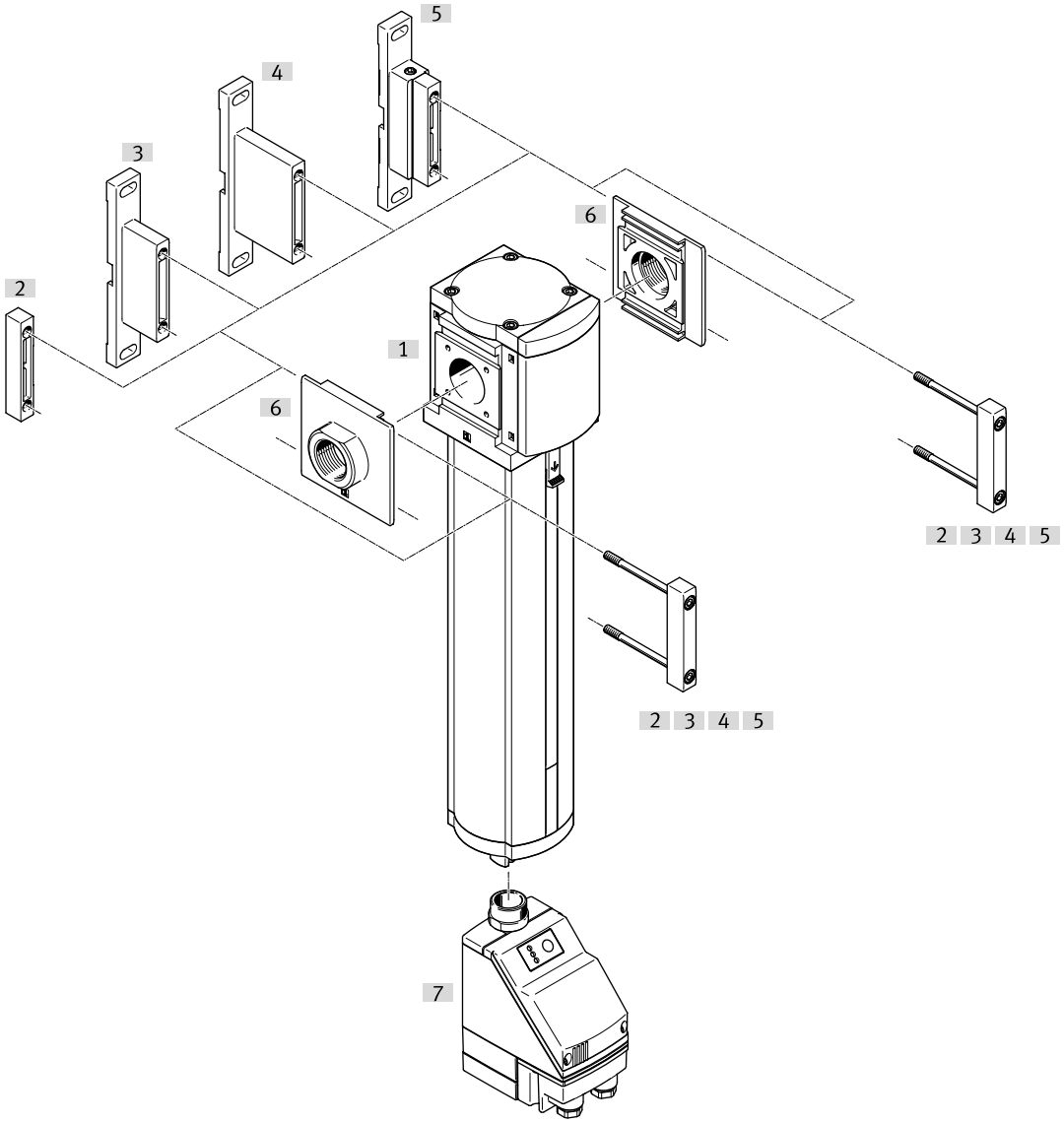

Accessories			→ Page/Internet
	Type/order code	Description	
[1]	Water separator MS9-LWS		🔗 ms9-lws
[2]	Module connector MS9-MV	for appliance combinations and individual appliances with connection plate	15
[3]	Mounting bracket MS9-WP	for single device	15
[4]	Mounting bracket MS9-WPB	for single device	15
[5]	Mounting bracket MS9-WPM	for single device	16
[6]	Sub-base-SET MS9-AG.../-AQ...	For device combinations	15
[7]	Condensate drain fully automatic, electrically controlled PWEA	Order code [E2], [E3], [E4]	🔗 ms9-lws

Accessories

Sub-base-SET MS9-AG.../-AQ...



Pneumatic connection 1	Material of sub-base	LABS (PWIS) conformity	Product weight	Part no.	Type
G1/2	Die-cast aluminum	VDMA24364-B1/B2-L	300 g	**552954**	**MS9-AGD**
G3/4				**552955**	**MS9-AGE**
G1				**552956**	**MS9-AGF**
G1 1/4			400 g	**552957**	**MS9-AGG**
G1 1/2				**552958**	**MS9-AGH**
1/2 NPT			300 g	**552959**	**MS9-AQR**
3/4 NPT				**552960**	**MS9-AQS**
1 NPT				**552961**	**MS9-AQT**
1 1/4 NPT			400 g	**552962**	**MS9-AQU**
1 1/2 NPT				**552963**	**MS9-AQV**

Module connector MS9-MV



Module connector material	LABS (PWIS) conformity	Product weight	Part no.	Type
Die-cast aluminum	VDMA24364-B1/B2-L	110 g	**552950**	**MS9-MV**

Mounting bracket MS9-WP



Bracket material	LABS (PWIS) conformity	Product weight	Part no.	Type
Die-cast aluminum	VDMA24364-B1/B2-L	180 g	**552947**	**MS9-WP**

Mounting bracket MS9-WPB



Bracket material	LABS (PWIS) conformity	Product weight	Part no.	Type
Die-cast aluminum	VDMA24364-B1/B2-L	210 g	**552949**	**MS9-WPB**

Accessories

Mounting bracket MS9-WP



Bracket material	LABS (PWIS) conformity	Product weight	Part no.	Type
Die-cast aluminum	VDMA24364-B1/B2-L	220 g	**552948**	**MS9-WPM**