Water trap MS12-LWS



Characteristics

At a glance

The water separator removes condensate from the compressed air.
- Constantly high condensate separation (99%) up to the maximum flow rate
- Shell protection by means of integrated metal shell.
- Available with fully automatic or fully automatic, electrically actuated condensate drain
- Product complies with ISO 1179-1 and ISO 228-1

Ordering data - modular system

Link ms12-lws

Configurable product
This product and all its product options can be ordered online via the configurator.

Diagrams

Link ms12-lws

The diagrams shown in this document are also available online. There, it is possible to display precise values.

Function

[LWS]	Water trap

The centrifugal separator removes condensate from compressed air. It has a high separation efficiency, which protects the downstream pneumatic components from moisture, corrosion, and malfunctions.

Pneumatic connection

Depending on the size, different connection types can be selected:
- Connecting plates with internal thread connection
- Module without connecting thread, without sub-base

Condensate drains

The condensate is drained by a fully automatic condensate drain valve with float actuation or a fully automatic electric condensate drain valve.

Type of mounting

[WP]	Mounting bracket standard design



- For wall mounting a single device or a service unit combination

Flow direction

Available with opposite flow direction.

Type code

001	Series	
MS	MS series	

002	Size	
12	Width dimension 124 mm	

003	Function	
LWS	Water trap	

004	Pneumatic connection	
AGF	Sub-base G1	
AGG	Sub-base G1 1/4	
AGH	Sub-base G1 1/2	
AGI	Sub-base G2	
AQT	Sub-base 1 NPT	
AQU	Sub-base 1 1/4 NPT	
AQV	Sub-base 1 1/2 NPT	
AQW	Sub-base 2 NPT	
G	Module without connecting thread, without sub-base	

005	Bowl type	
U	Aluminum	

006	Condensate drain	
E2	External fully automatic condensate drain, electric, 110 VAC, connection terminals	
E3	External fully automatic condensate drain, electric, 230 VAC, connection terminals	
E4	External fully automatic condensate drain, electric, 24 V DC, connection terminals	
V	Fully automatic, normally open	
VC	Fully automatic, normally closed	

007	Type of mounting	
	Without mounting bracket	
WP	Mounting bracket standard design	

008	Flow direction	
	Flow direction from left to right	
Z	Flow direction from right to left	

Datasheet

General technical data

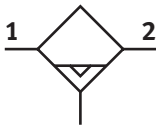

Pneumatic connection 1 [1]	–
Pneumatic connection 2 [2]	–
Size	12
Structural design	Centrifugal separator
Type of mounting	Alternatively: In-line installation With mounting bracket With accessories
Mounting position	Vertical ±5°
Air quality class at the output [3]	Compressed air as per ISO 8573-1:2010 [-:7:4], Compressed air as per ISO 8573-1:2010 [7:7:4]
Bowl guard	Integrated as metal bowl
Condensate drain	Fully automatic, Fully automatic, electrically controlled
Degree of condensate separation	99%
Max. condensate volume	400 ml

1) Via sub-base [AG...]: G1, G1 1/4, G1 1/2 or G2; [AQ...]: NPT1, NPT1 1/4, NPT1 1/2 or NPT2; as module without connection thread/sub-base [G]: -
2) Via sub-base [AG...]: G1, G1 1/4, G1 1/2 or G2; [AQ...]: NPT1, NPT1 1/4, NPT1 1/2 or NPT2; as module without connection thread/sub-base [G]: -
3) With variant E2, E3 or E4: ISO 8573-1:2010 [–:7:4]

Flow rates

Normal nominal flow rate (normalized to DIN 1343)[1]	25,000 l/min
Max. standard flow rate [2]	40,000 l/min

1) Tolerance: ±15%; Measured at p1 = 6 bar and Δp = 0.5 bar
2) Tolerance: ±15%; Measured at p1 = 6 bar and Δp = 0.5 bar

Operating and ambient conditions

Condensate drain	Fully automatic
Operating pressure	2 ... 12 bar
Operating medium	Compressed air as per ISO 8573-1:2010 [7:-:-]
Ambient temperature	5 ... 60°C
Temperature of medium	5 ... 60°C
Corrosion resistance class (CRC) [1]	2 - Moderate corrosion stress

1) Further information, visit www.festo.com/x/topic/kbk

Operating and ambient conditions

Condensate drain	Fully automatic, Fully automatic, electrically controlled
Operating pressure	1 ... 16 bar
Operating medium	Compressed air as per ISO 8573-1:2010 [-:-:-] Compressed air as per ISO 8573-1:2010 [7:-:-]
Ambient temperature	1 ... 60°C
Temperature of medium	1 ... 60°C
Corrosion resistance class (CRC) [1]	2 - Moderate corrosion stress

1) Further information, visit www.festo.com/x/topic/kbk

Weights

Product weight [1]	6.3 g

1) Water separator with electrically actuated condensate drain, fully automatic [E2], [E3], [E4]: 7000 g

Datasheet

Materials	
Housing material	Die-cast aluminum
Material of bowl	Wrought aluminum alloy
Inspection window material	PA
Material of spin disc	POM
Covering material	PA-reinforced
Material of sub-base	Die-cast aluminum
Material of mounting bracket	Die-cast aluminum
Module connector material	Die-cast aluminum
Shell sealing material	NBR
Separating disc material	POM
Note on materials	RoHS compliant
LABS (PWIS) conformity	VDMA24364-B1/B2-L

Normal flow rate qn as a function of the differential pressure p1-2 - Pneumatic connection G1 1/2, G2, NPT1 1/2, NPT2

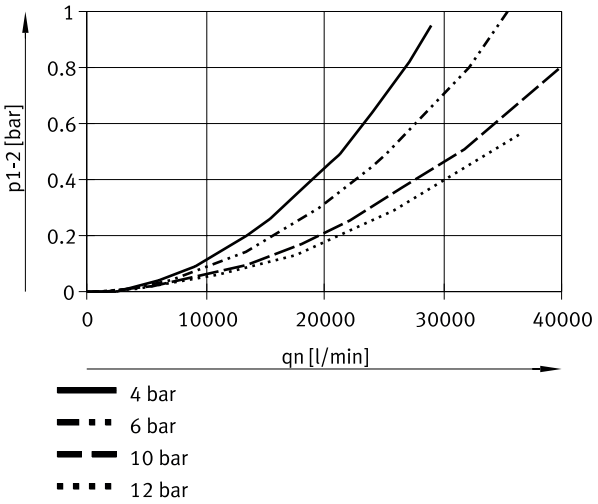

Dimensions

Dimensions – Module without connecting thread, without sub-base G, [V]
Condensate drain, fully automatic

Download CAD data www.festo.com

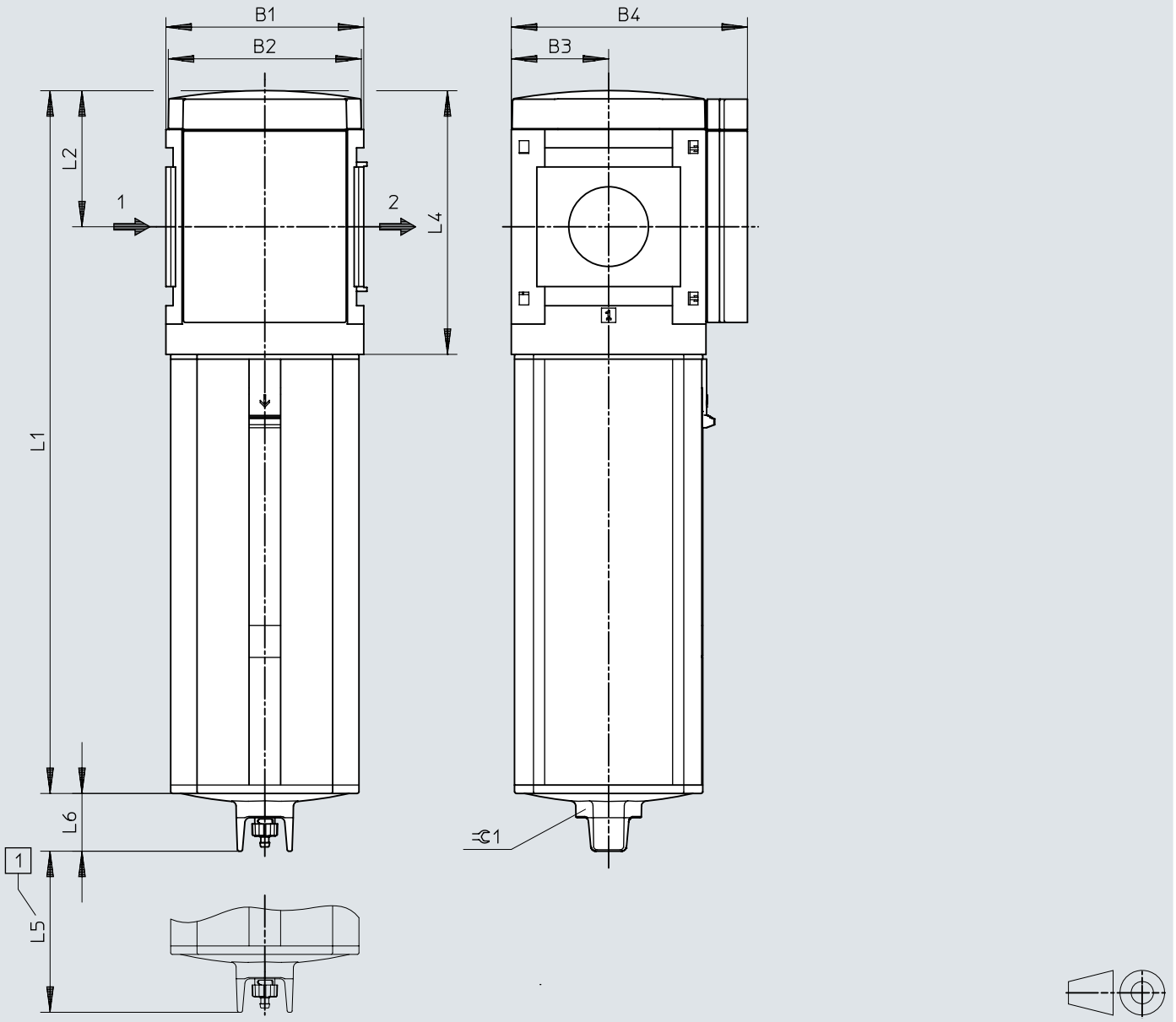

[1] Installation dimension
[2] Note: Dimensions with sub-base → ms12-ag; mounting bracket → ms12-wp

	B1	B2	B3	B4	L1	L2	L4	L5	L6	⊂ 1
MS12-LWS-G	124	122	61	148	441	85	165	60	36	36

Dimensions

Dimensions – [V] Condensate drain fully automatic Download CAD data www.festo.com

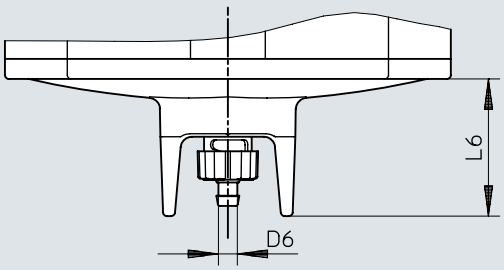

	D6	L6
MS12-LWS-...-V	5,6	36

Dimensions

Dimensions – [E2]/[E3]/[E4] Fully automatic, electrically actuated Download CAD data www.festo.com

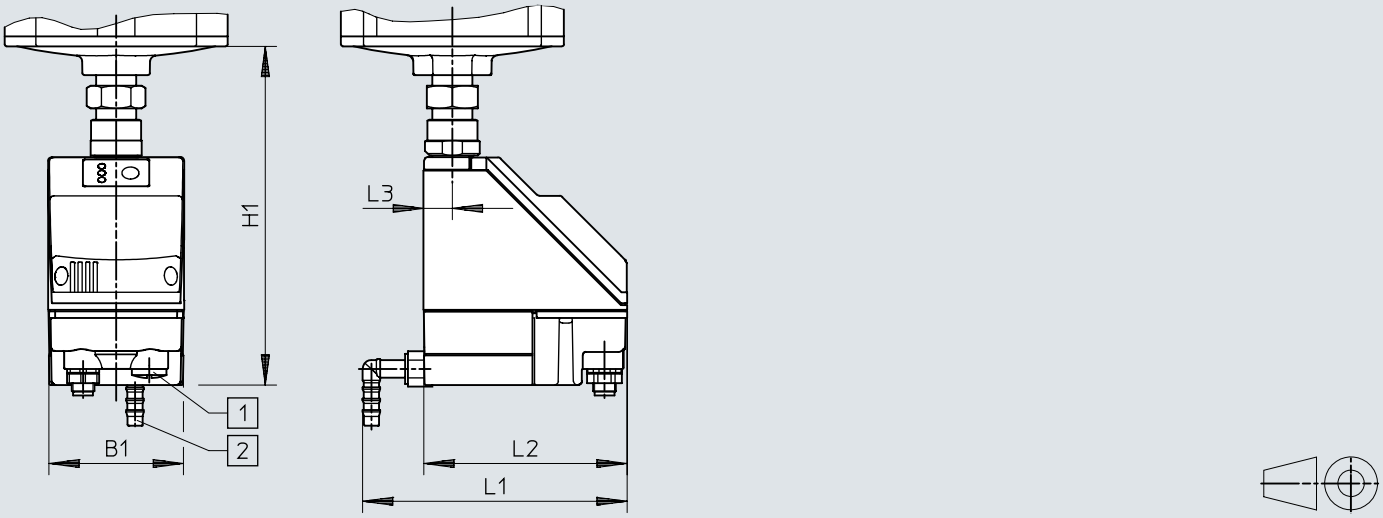

[1] Electrical connection screw terminal PG9
[2] Connection 360° swiveling for plastic hose PUN-H-12x2

	B1	H1	L1	L2	L3
MS12-LWS-...-E2/E3/E4	72	179	140	108	15

Ordering data

Ordering data



Size	Condensate drain	Product weight	Part no.	Type
12	Fully automatic	6.3 g	**8005550**	**MS12-LWS-G-U-V**

Ordering data – Modular product system

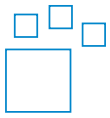

Type code	Part no.	Type
MS12-LWS	**569827**	**MS12-LWS**

Peripherals overview

Peripherals overview

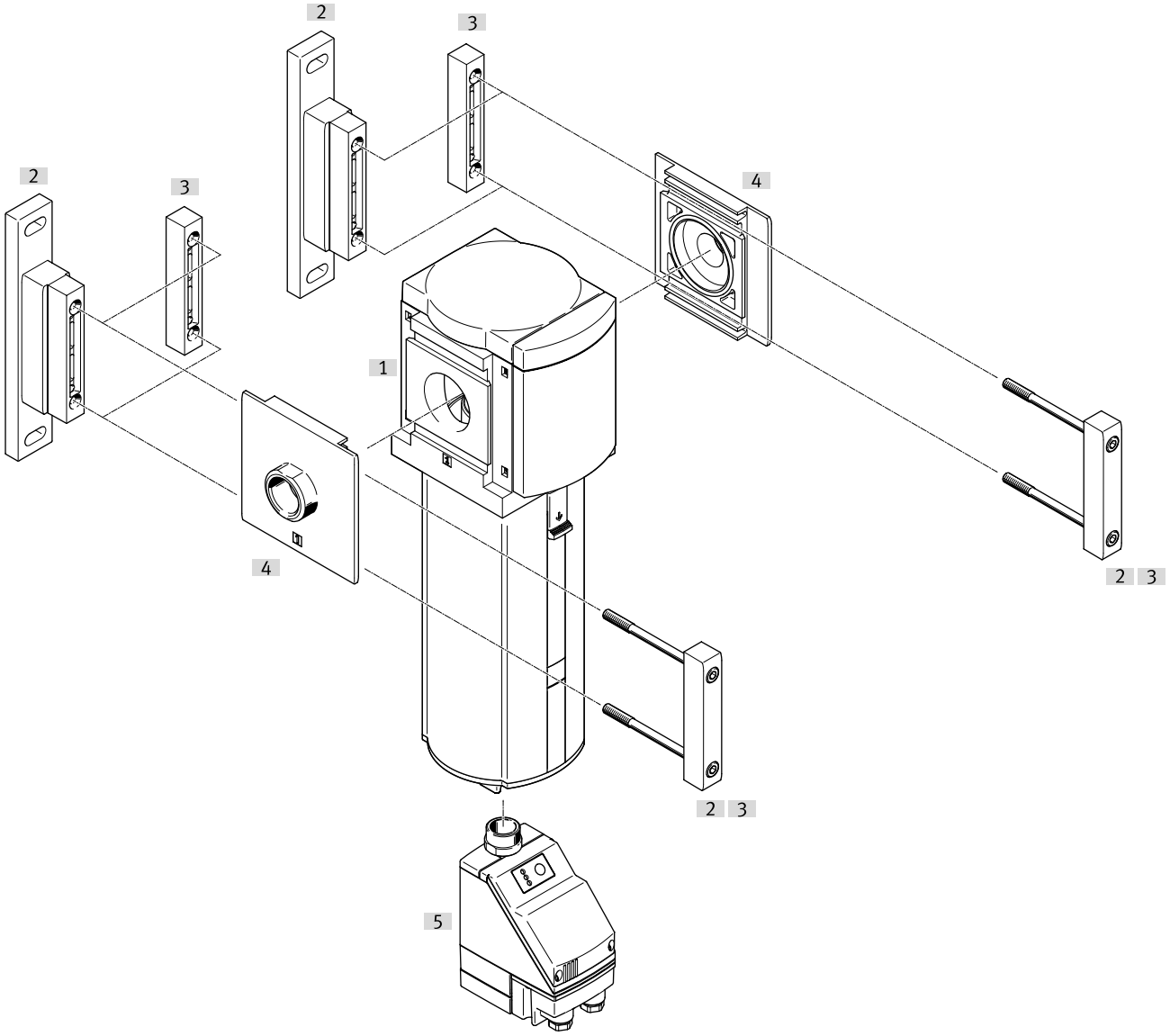

Accessories			→ Page/Internet
	Type/order code	Description	
[1]	Water separator MS12-LWS		ms12-lws
[2]	Mounting bracket MS12-WP	Order code [WP]; for single device or service unit combinations	11
[3]	Module connector MS12-MV	For device combinations and individual devices with sub-base	11
[4]	Sub-base-SET MS12-AG.../-AQ...	Order code [AG...]; for device combinations	11
[5]	Condensate drain fully automatic, electrically controlled PWEA	Order code [E2], [E3], [E4]	ms12-lws

Accessories

Module connector MS6-MV1



Size	Product weight	Part no.	Type
12	500 g	**537134**	**MS12-MV**

Mounting bracket MS6-WP...



Size	Product weight	Part no.	Type
12	700 g	**537133**	**MS12-WP**

Sub-base SET MS12-AG...

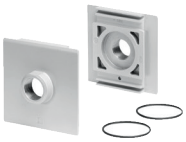

Size	Pneumatic connection 1	Product weight	Part no.	Type
12	G1	1,300 g	**537135**	**MS12-AGF**
	G1 1/4		**537136**	**MS12-AGG**
	G1 1/2		**537137**	**MS12-AGH**
	G2		**537138**	**MS12-AGI**
	1 NPT		**537139**	**MS12-AQT**
	1 1/4 NPT		**537140**	**MS12-AQU**
	1 1/2 NPT		**537141**	**MS12-AQV**
	2 NPT		**537142**	**MS12-AQW**