Water separator MS9-LWS

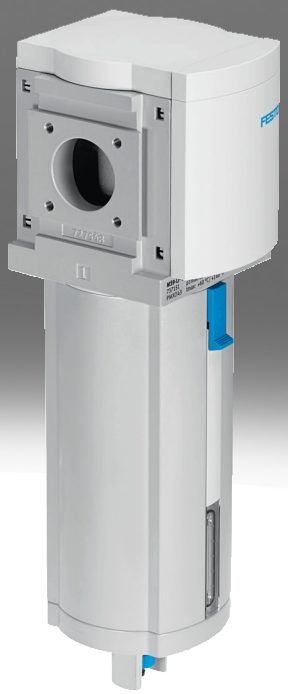

Characteristics

At a glance

The water separator removes condensate from the compressed air.
- Constantly high condensate separation (99%) up to the maximum flow rate
- Bowl guard tanks to integrated metal bowl.
- Available with fully automatic or fully automatic, electrically actuated condensate drain
- Optional device variant EX4 for use in potentially explosive areas of zones 1, 2, 21 and 22
- Product complies with ISO 1179-1 and ISO 228-1

Ordering data - modular system

Link ms9-lws

Configurable product
This product and all its product options can be ordered online via the configurator.

Diagrams

Link ms9-lws

The diagrams shown in this document are also available online. These can be used to display precise values.

Function

[LWS]	Water separator

The centrifugal separator removes condensate from the compressed air. It has a high separation efficiency, which protects the downstream pneumatic components from moisture, corrosion and malfunctions.

Pneumatic connection

Depending on the size, different connection types can be selected:
- Individual fittings that are fastened via a female thread
- Connecting plates with female thread
- Module without connecting thread, without connecting plate

Condensate drain

The condensate is drained by a fully automatic condensate drain valve with float actuation or a fully automatic electric condensate drain valve.

Type of mounting

[WP]	Mounting bracket basic design



- For wall mounting a single device or a service unit combination

[WBM]	Mounting centrally at rear (wall mounting top), connecting plates not required



- For wall mounting of a single device or a service unit combination (without EU approval for sub-base mounting)

Characteristics

[WPB]	Mounting bracket for large wall gap



- For wall mounting a single device or a service unit combination

EX certification EU

Optional device variant EX4 for use in potentially explosive areas of zones 1, 2, 21 and 22

UL certification

Optional device variant UL1, which meets the safety requirements for the Canadian and US markets.

Flow direction

Available with flow in the opposite direction.

Type code

001	Series	
MS	MS series	

002	Size	
9	Grid dimension 90 mm	

003	Function	
LWS	Water separator	

004	Pneumatic connection	
3/4	Female thread G3/4	
1	Female thread G1	
AGD	Sub-base G1/2	
AGE	Sub-base G3/4	
AGF	Sub-base G1	
AGG	Connecting plate G1 1/4	
AGH	Connecting plate G1 1/2	
AQR	Sub-base 1/2 NPT	
AQS	Sub-base 3/4 NPT	
AQT	Sub-base 1 NPT	
AQU	Sub-base 1 1/4 NPT	
AQV	Sub-base 1 1/2 NPT	
G	Module without connecting thread, without sub-base	
N3/4	Female thread 3/4 NPT	
N1	Female thread 1 NPT	

005	Bowl type	
U	Aluminium	

006	Condensate drain	
E2	External fully automatic condensate drain, electric, 110 V AC, connection terminals	
E3	External fully automatic condensate drain, electric, 230 V AC, connection terminals	
E4	External fully automatic condensate drain, electric, 24 V DC, connection terminals	
V	Fully automatic, normally open	
VC	Fully automatic, normally closed	

007	Type of mounting	
	Without mounting bracket	
WP	Mounting bracket basic design	
WPB	Mounting bracket for large wall gap	
WPM	Mounting bracket for hooking in service unit components	

008	EX certification EU	
	None	
EX4	II 2GD	

009	UL certification	
	None	
UL1	cULus ordinary location for Canada and USA	

010	Flow direction	
	Flow direction from left to right	
Z	Flow direction from right to left	

Datasheet

General technical data

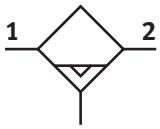

Pneumatic connection, port 1 [1]	–
Pneumatic connection, port 2 [2]	–
Size	9
Design	Centrifugal separator
Type of mounting	Either: Inline installation With accessories
Mounting position	Vertical +/-5°
Air purity class at output	Compressed air to ISO 8573-1:2010 [-:7:4]
Bowl guard	Integrated as metal bowl
Condensate drain	Fully automatic, Fully automatic, electrically actuated, Manual, non-detenting
Degree of condensate separation	99%
Max. condensate volume	220 ml

1) Via internal thread: G3/4, G1, NPT3/4 or NPT1; via connecting plate [AG...]: G1/2, G3/4, G1, G1 1/4 or G1 1/2; [AQ...]: NPT1/2, NPT3/4, NPT1, NPT1 1/4 or NPT1 1/2; as module without connecting thread/plate [G]: -
2) Via internal thread: G3/4, G1, NPT3/4 or NPT1; via connecting plate [AG...]: G1/2, G3/4, G1, G1 1/4 or G1 1/2; [AQ...]: NPT1/2, NPT3/4, NPT1, NPT1 1/4 or NPT1 1/2; as module without connecting thread/plate [G]: -

Standard nominal flow rate qnN

Standard nominal flow rate (standardised to DIN 1343)[1]	12,000 ... 15,000 l/min

1) G3/4, NPT3/4: 12000 l/min ±15%; G1, NPT1, module without connecting thread and without connecting plate: 15000 l/min ±15%; Measured at p1 = 6 bar and Δp = 1 bar

Operating and environmental conditions

Condensate drain	Fully automatic
Operating pressure	2 ... 12 bar
Operating medium [1]	Compressed air to ISO 8573-1:2010 [-:7:4]
Ambient temperature	-10 ... 60°C
Media temperature	-10 ... 60°C
Storage temperature	5 ... 60°C
Corrosion resistance class CRC [2]	2 - Moderate corrosion stress

1) Compressed air according to ISO 8573-1:2010 [7:9:-] applies to fully automatic condensate drain
2) More information www.festo.com/x/topic/crc

Operating and environmental conditions – fully automatic, electrically controlled condensate drain [E2], [E3], [E4]

Condensate drain	Fully automatic, Fully automatic, electrically actuated, Manual, non-detenting
Operating pressure	0.8 ... 16 bar
Operating medium	Compressed air to ISO 8573-1:2010 [-:7:4]
Ambient temperature	-10 ... 60°C
Media temperature	-10 ... 60°C
Storage temperature	1 ... 60°C
Corrosion resistance class CRC [1]	2 - Moderate corrosion stress
Approval [3]	c UL us - Recognised (Oil)

1) More information www.festo.com/x/topic/crc
3) More information www.festo.com/catalogue/ms9-lws → Support/Downloads.

Datasheet

ATEX	
ATEX category gas	II 2G
Explosion ignition protection type for gas	Ex h IIC T6 Gb X
ATEX category dust	II 2D
Explosion ignition protection type for dust	Ex h IIIC T60°C Db X
Explosion ambient temperature	+5°C <= Ta <= +60°C
CE mark (see declaration of conformity) [1]	To EU Explosion Protection Directive (ATEX)
UKCA marking (see declaration of conformity)[2]	To UK EX instructions

1) More information www.festo.com/catalogue/ms9-lws → Support/Downloads.
2) More information www.festo.com/catalogue/ms9-lws → Support/Downloads.

Weight	
Product weight [1]	2,000 g

1) Water separator with electrically actuated condensate drain, fully automatic [E2], [E3], [E4]: 2400 g

Materials	
Material housing	Die-cast aluminium
Material bowl	Wrought aluminium alloy
Material screen	PA
Material covering	Reinforced PA
Material spin disc	POM
Material sub-base	Die-cast aluminium
Material mounting bracket	Die-cast aluminium
Material module connector	Die-cast aluminium
Material cup seal	NBR
Material separating plate	POM
Note on materials	RoHS compliant
LABS (PWIS) conformity	VDMA24364-B1/B2-L

Standard flow rate qn as a function of differential pressure p1-2 – pneumatic connection G3/4, NPT3/4

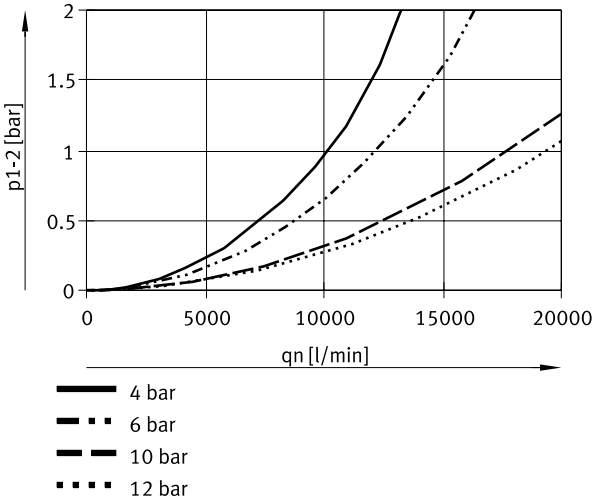

Datasheet

Standard flow rate qn as a function of differential pressure p1-2 – pneumatic connection G1, NPT1

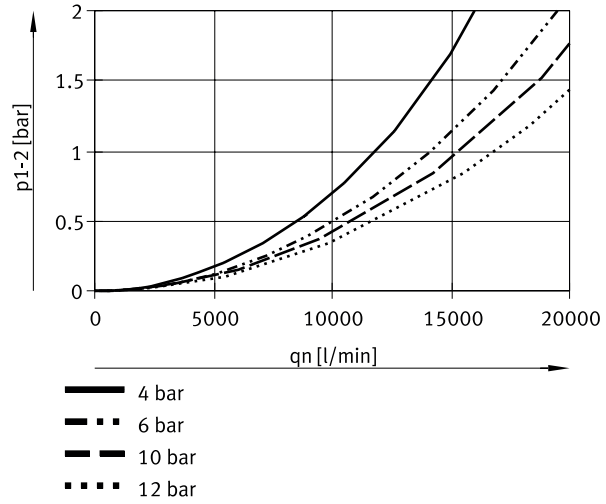

Dimensions

Dimensions – Module without connecting thread, without connecting plate
G, [V] condensate drain, fully automatic

Download CAD data www.festo.com

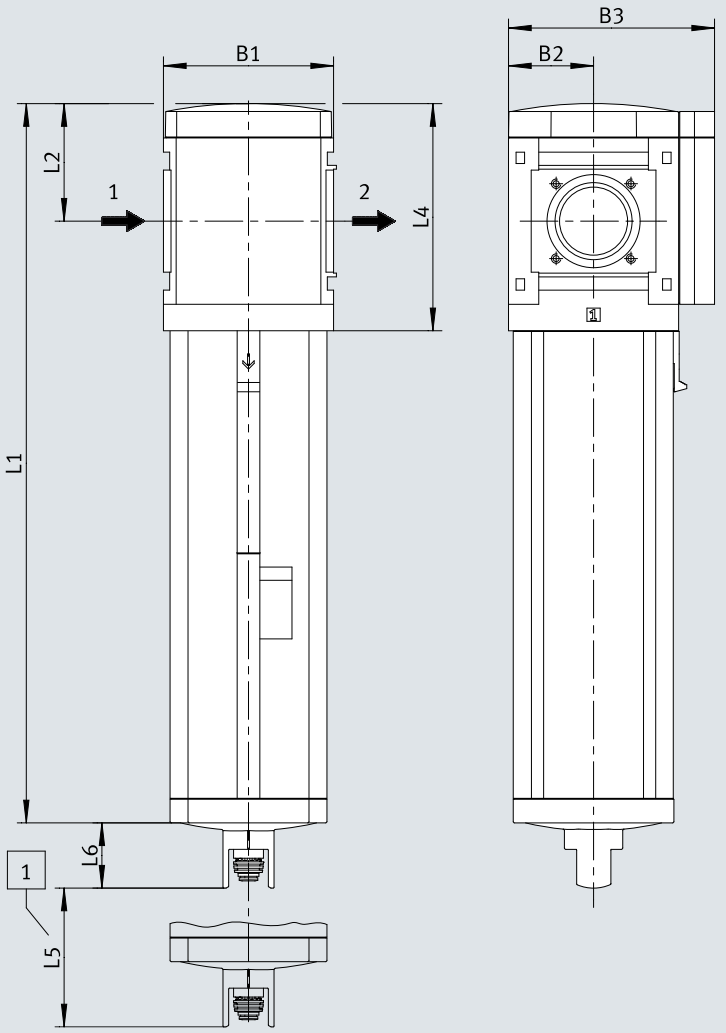

[1] Installation dimension

	B1	B2	B3	L1	L2	L4	L5	L6
MS9-LWS-G	90	45	109	310,5	62	120	50	34,5

Dimensions

Dimensions – With female thread Download CAD data www.festo.com

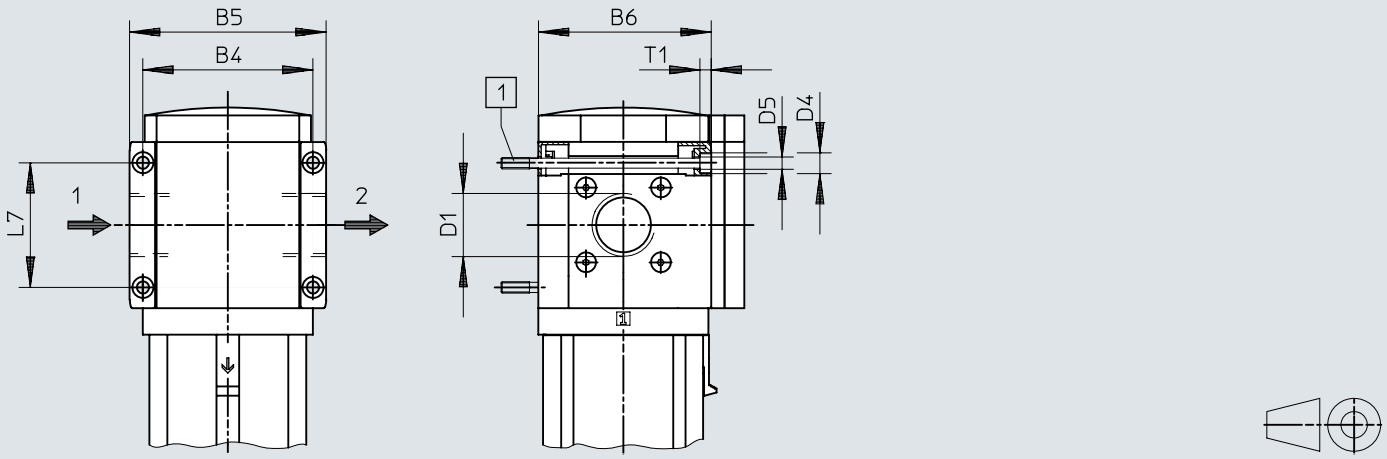

[1] Retaining screw M6xmin.90 according to DIN 912 (not included in the scope of delivery) for wall mounting without mounting bracket

	B7		B8	D1	L8	⌀
		EX4			EX4	
MS9-LWS-AGD	112	122	132	G1/2	35	30
MS9-LWS-AGE			132	G3/4		36
MS9-LWS-AGF			142	G1		41
MS9-LWS-AGG			162	G1 1/4		50
MS9-LWS-AGH			176	G1 1/2		55
MS9-LWS-AQR	112	122	132	NPT1/2-14	35	30
MS9-LWS-AQS			132	NPT3/4-14		36
MS9-LWS-AQT			142	NPT1-11 1/2		41
MS9-LWS-AQU			162	NPT1 1/4-11 1/2		50
MS9-LWS-AQV			176	NPT1 1/2-11 1/2		55

Dimensions

Dimensions – With connecting plate AG.../AQ... Download CAD data www.festo.com

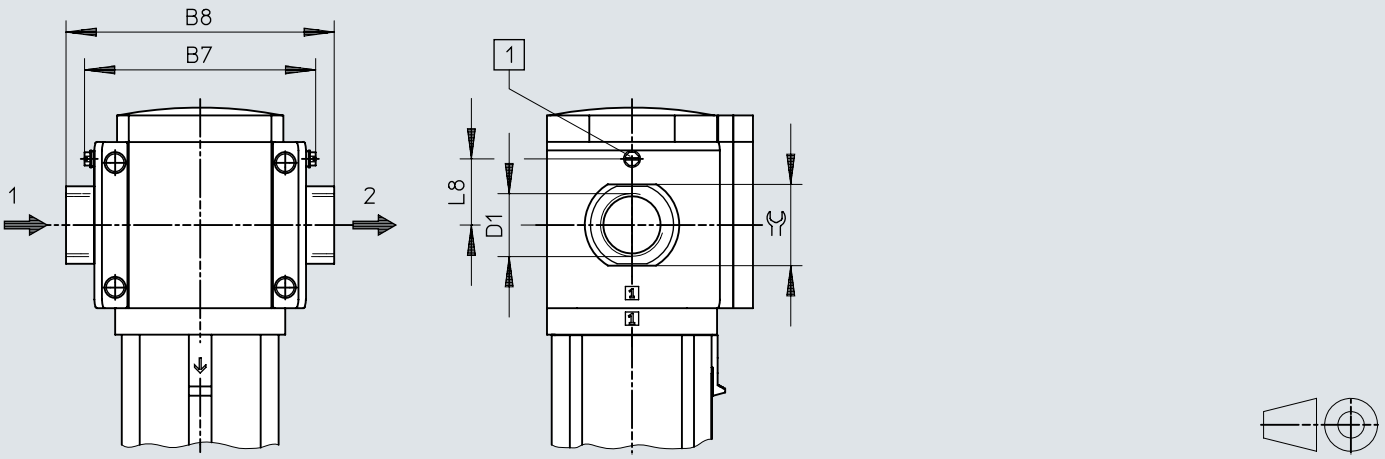

[1] Earthing screw M4x8 (only for MS9-...-EX4)

	B4	B5	B6	D1	D4	D5	L7	T1
MS9-LWS-3/4	90	104	91,5	G3/4	11	6,5	66	6
MS9-LWS-1				G1				
MS9-LWS-N3/4	90	104	91,5	NPT3/4-14	11	6,5	66	6
MS9-LWS-N1				NPT1-11 1/2				

Dimensions

Dimensions – [V] Condensate drain fully automatic Download CAD data www.festo.com

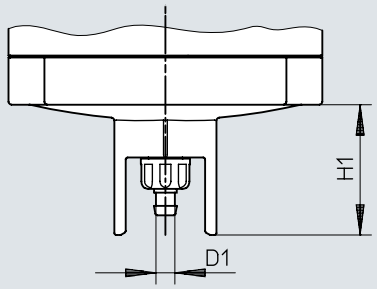

	D1	H1
MS9-LWS-...-V	5,6	34,5

Dimensions

Dimensions – [E2]/[E3]/[E4] fully automatic, electrically actuated Download CAD data www.festo.com

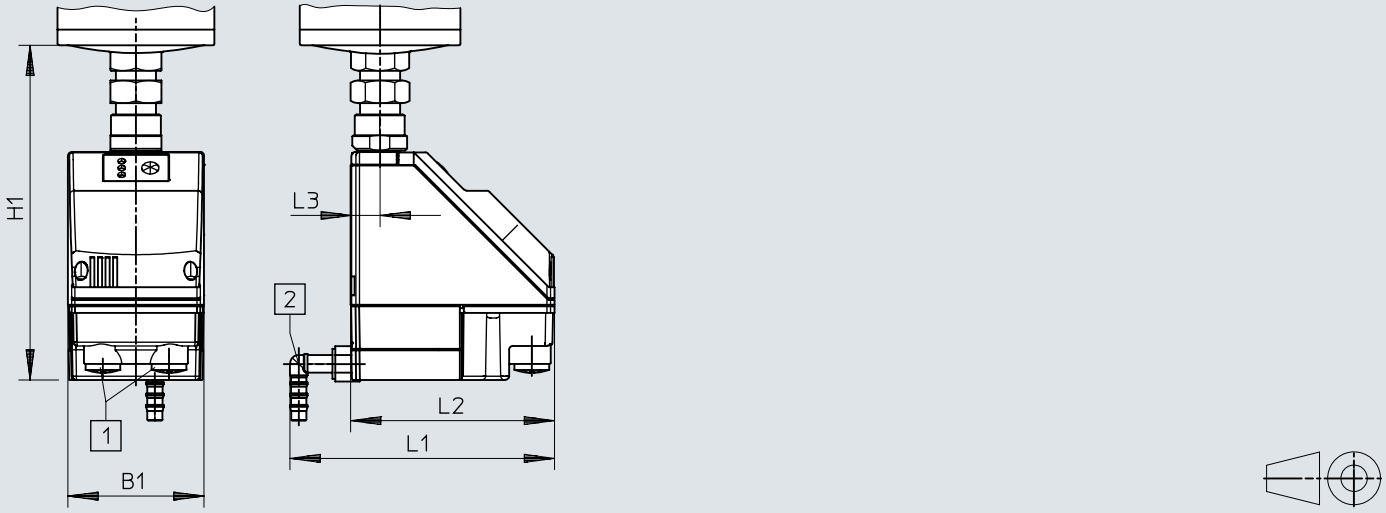

[1] Electrical connection: screw terminal PG9
[2] Connection can be rotated 360° for plastic tubing PUN-H-12x2

	B1	H1	L1	L2	L3
MS9-LWS-...-E2/E3/E4	72	178	140	108	15

Ordering data

Ordering data



Size	Condensate drain	Product weight	Part no.	Type
9	Fully automatic	2,000 g	**571468**	**MS9-LWS-G-U-V**

Ordering data – Modular product system

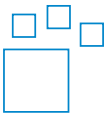

Short type code	Part no.	Type
MS9-LWS	**567857**	**MS9-LWS**

Peripherals

Peripherals overview

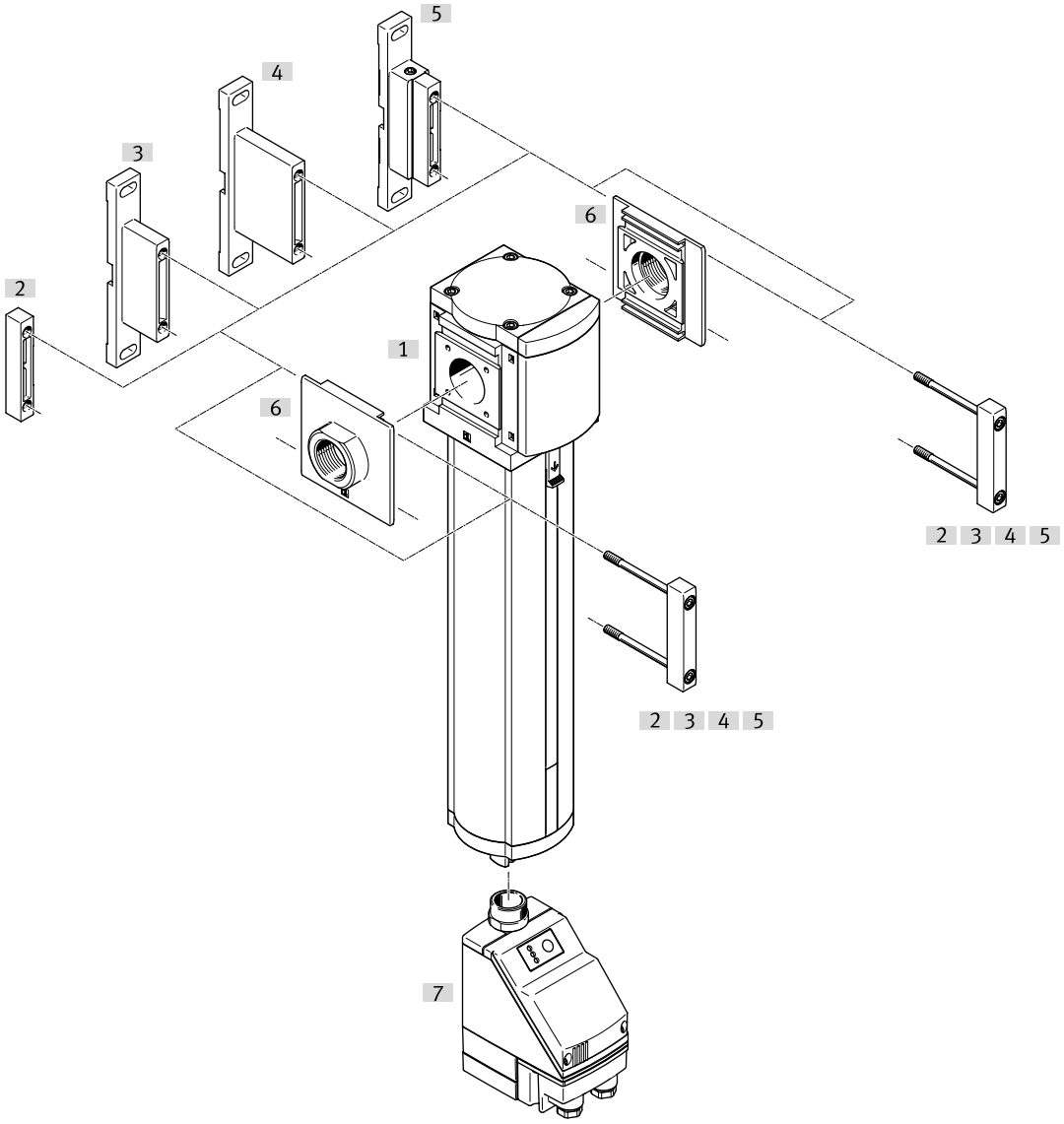

Accessories			→ Link
	Type/order code	Description	
[1]	Water separator MS9-LWS		ms9-lws
[2]	Module connector MS9-MV	For device combinations and individual devices with connecting plate	15
[3]	Mounting bracket MS9-WP	For an individual device	15
[4]	Mounting bracket MS9-WPB	For an individual device	15
[5]	Mounting bracket MS9-WPM	For an individual device	16
[6]	Connecting plate-SET MS9-AG.../-AQ...	For device combinations	15
[7]	Condensate drain, fully automatic, electrically controlled PWEA	Order code [E2], [E3], [E4]	ms9-lws

Accessories

Connecting plate-SET MS9-AG.../-AQ...



Pneumatic connection, port 1	Material sub-base	LABS (PWIS) conformity	Product weight	Part no.	Type
G1/2	Die-cast aluminium	VDMA24364-B1/B2-L	300 g	**552954**	**MS9-AGD**
G3/4				**552955**	**MS9-AGE**
G1				**552956**	**MS9-AGF**
G1 1/4			400 g	**552957**	**MS9-AGG**
G1 1/2				**552958**	**MS9-AGH**
1/2 NPT			300 g	**552959**	**MS9-AQR**
3/4 NPT				**552960**	**MS9-AQS**
1 NPT				**552961**	**MS9-AQT**
1 1/4 NPT			400 g	**552962**	**MS9-AQU**
1 1/2 NPT				**552963**	**MS9-AQV**

Module connector MS9-MV



Material module connector	LABS (PWIS) conformity	Product weight	Part no.	Type
Die-cast aluminium	VDMA24364-B1/B2-L	110 g	**552950**	**MS9-MV**

Mounting bracket MS9-WP



Material bracket	LABS (PWIS) conformity	Product weight	Part no.	Type
Die-cast aluminium	VDMA24364-B1/B2-L	180 g	**552947**	**MS9-WP**

Mounting bracket MS9-WPB



Material bracket	LABS (PWIS) conformity	Product weight	Part no.	Type
Die-cast aluminium	VDMA24364-B1/B2-L	210 g	**552949**	**MS9-WPB**

Accessories

Mounting bracket MS9-WP



Material bracket	LABS (PWIS) conformity	Product weight	Part no.	Type
Die-cast aluminium	VDMA24364-B1/B2-L	220 g	**552948**	**MS9-WPM**