Water separators MS6-LWS

FESTO

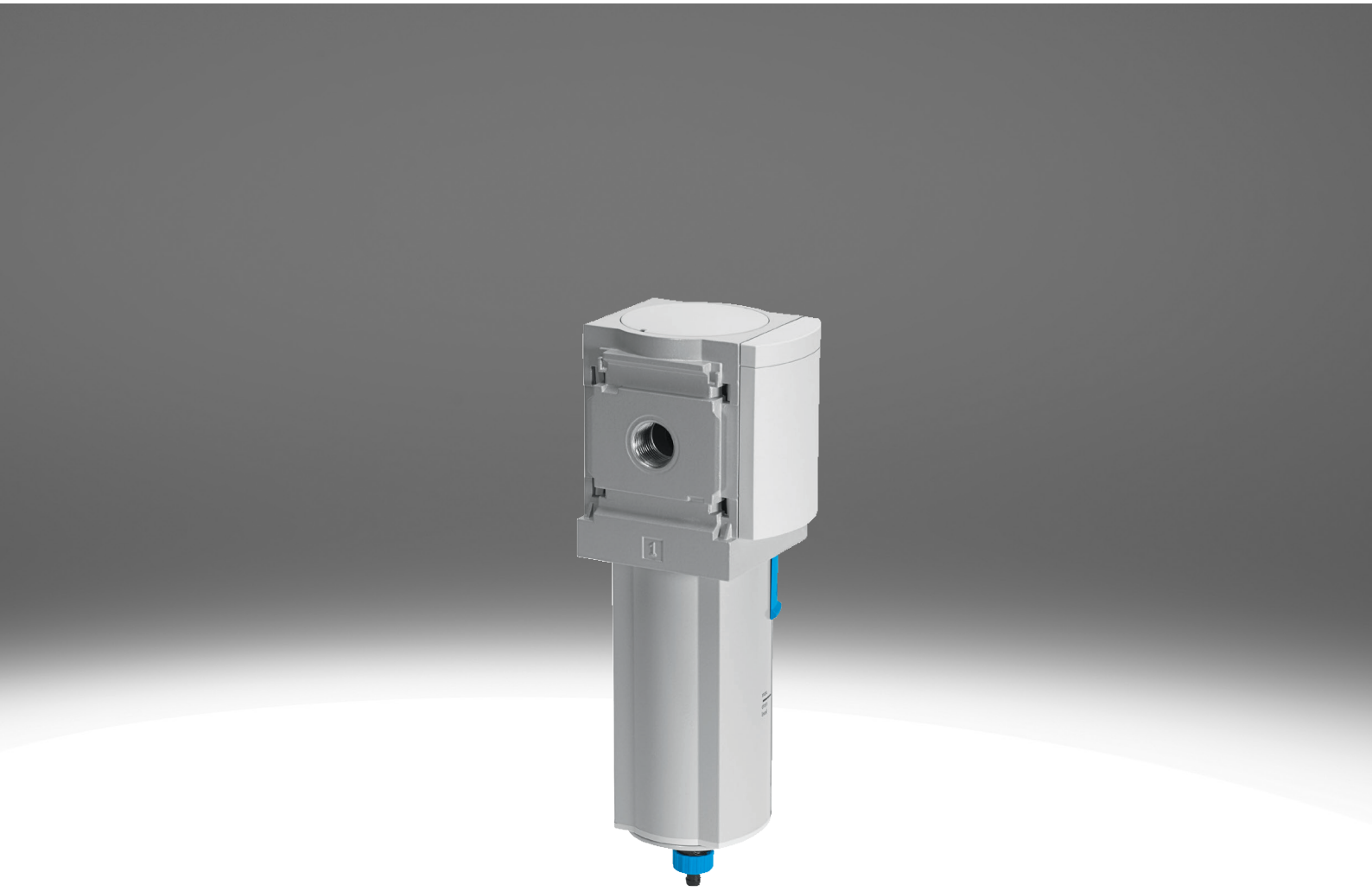

Characteristics

At a glance

The water separator removes condensate from the compressed air.

- Constantly high condensate separation (99%) up to the maximum flow rate
- Bowl guard tanks to integrated metal bowl.
- Available with fully automatic or fully automatic, electrically actuated condensate drain
- Optional device variant EX4 for use in potentially explosive areas of zones 1, 2, 21 and 22
- Product complies with ISO 1179-1 and ISO 228-1

Ordering data - modular system

Link ms6-lws

Configurable product
This product and all its product options can be ordered online via the configurator.

Diagrams

Link ms6-lws

The diagrams shown in this document are also available online. These can be used to display precise values.

Function

[LWS]	Water separator

The centrifugal separator removes condensate from the compressed air. It has a high separation efficiency, which protects the downstream pneumatic components from moisture, corrosion and malfunctions.

Pneumatic connection

By installing connecting plates it is easier to replace the module if necessary (e.g. when using piping).

Condensate drain

The condensate is drained by a fully automatic condensate drain valve with float actuation or a fully automatic electric condensate drain valve.

Type of mounting

[WP]	Mounting bracket basic design



For wall mounting a single device or a service unit combination

[WPM]	Mounting bracket for hooking in service unit components



For wall mounting a single device or a service unit combination

[WB]	Mounting centrally at rear (wall mounting top and bottom), connecting plates not required



For wall mounting an individual device

Characteristics

EX certification EU

Optional device variant EX4 for use in potentially explosive areas of zones 1, 2, 21 and 22

UL certification

Optional device variant UL1, which meets the safety requirements for the Canadian and US markets.

Flow direction

Available with flow in the opposite direction.

Type code

001	Series	
MS	MS series	

002	Size	
6	Grid dimension 62 mm	

003	Thread type	
	G thread	

004	Function	
LWS	Water separator	

005	Pneumatic connection	
1/4	Female thread G1/4	
3/8	Female thread G3/8	
1/2	Female thread G1/2	
AGB	Sub-base G1/4	
AGC	Sub-base G3/8	
AGD	Sub-base G1/2	
AGE	Sub-base G3/4	
AGF	Sub-base G1	

006	Bowl type	
U	Aluminium	

007	Condensate drain	
E2	External fully automatic condensate drain, electric, 110 V AC, connection terminals	
E3	External fully automatic condensate drain, electric, 230 V AC, connection terminals	
E4	External fully automatic condensate drain, electric, 24 V DC, connection terminals	
V	Fully automatic, normally open	
VC	Fully automatic, normally closed	

008	Type of mounting	
	Without mounting bracket	
WB	Mounting centrally at rear (wall mounting top and bottom), connecting plates not required	
WP	Mounting bracket basic design	
WPM	Mounting bracket for hooking in service unit components	

009	EX certification EU	
	None	
EX4	II 2GD	

010	UL certification	
	None	
UL1	cULus ordinary location for Canada and USA	

011	Flow direction	
	Flow direction from left to right	
Z	Flow direction from right to left	

Datasheet

General technical data			
Pneumatic connection, port 1 [1]	G1/4	G3/8	G1/2
Pneumatic connection, port 2 [2]	G1/4	G3/8	G1/2
Size	6		
Design	Centrifugal separator		
Type of mounting	Either: Inline installation With accessories		
Mounting position	Vertical +/-5°		
Air purity class at output [3]	Compressed air to ISO 8573-1:2010 [7:7:4]		
Bowl guard	Integrated as metal bowl		
Condensate drain	Fully automatic		
Degree of condensate separation	99%		
Max. condensate volume	38 ml		

1) Via connecting plate [AG...]: G1/4, G3/8, G1/2, G3/4 or G1; [AQ...]: 1/4 NPT, 3/8 NPT, 1/2 NPT or 3/4 NPT
2) Via connecting plate [AG...]: G1/4, G3/8, G1/2, G3/4 or G1; [AQ...]: 1/4 NPT, 3/8 NPT, 1/2 NPT or 3/4 NPT
3) With variant E2, E3 or E4: ISO 8573-1:2010 [–:7:4]

Standard nominal flow rate qnN			
Pneumatic connection, port 1	G1/4	G3/8	G1/2
Standard nominal flow rate (standardised to DIN 1343)	2,400 l/min	3,500 l/min	3,800 l/min

Operating and environmental conditions – fully automatic condensate drain [V]	
Condensate drain	Fully automatic
Operating pressure	2 ... 12 bar
Operating medium [1]	Compressed air to ISO 8573-1:2010 [7:-:-] Inert gas
Ambient temperature	-10 ... 60°C
Media temperature	-10 ... 60°C
Storage temperature	–
Corrosion resistance class CRC [2]	2 - Moderate corrosion stress
Suitable for use with food [3]	See supplementary material information

1) Compressed air according to ISO 8573-1:2010 [7:9:-] applies to fully automatic condensate drain
2) More information: www.festo.com/x/topic/crc
3) More information www.festo.com/catalogue/ms6-lws → Support/Downloads.

Operating and environmental conditions – fully automatic, electrically controlled condensate drain [E2], [E3], [E4]	
Condensate drain	Fully automatic, Fully automatic, electrically actuated, Manual, non-detenting
Operating pressure	0.8 ... 16 bar
Operating medium [1]	Compressed air to ISO 8573-1:2010 [-:-:-] Compressed air to ISO 8573-1:2010 [7:-:-] Inert gas
Ambient temperature	-10 ... 60°C
Media temperature	-10 ... 60°C
Storage temperature	–
Corrosion resistance class CRC [2]	2 - Moderate corrosion stress
Suitable for use with food [3]	See supplementary material information
Approval [4]	c UL us - Recognised (Oil)

1) Compressed air according to ISO 8573-1:2010 [7:9:-] applies to fully automatic condensate drain
2) More information: www.festo.com/x/topic/crc
3) More information www.festo.com/catalogue/ms6-lws → Support/Downloads.
4) More information www.festo.com/catalogue/ms6-lws → Support/Downloads.

Datasheet

ATEX	
ATEX category gas	II 2G
Explosion ignition protection type for gas	Ex h IIC T6 Gb X
ATEX category dust	II 2D
Explosion ignition protection type for dust	Ex h IIIC T60°C Db X
Explosion ambient temperature	-10°C <= Ta <= +60°C
CE mark (see declaration of conformity) [1]	To EU Explosion Protection Directive (ATEX)
UKCA marking (see declaration of conformity)[2]	To UK EX instructions

1) Further information www.festo.com/catalogue/ms6-lws → Support/Downloads.
2) Further information www.festo.com/catalogue/ms6-lws → Support/Downloads.

Weight	
Product weight [1]	820 g

1) Water separator with electrically actuated condensate drain, fully automatic [E2], [E3], [E4]: 1800 g

Materials	
Material housing	Die-cast aluminium
Material bowl	Wrought aluminium alloy
Material screen	PA
Material seals	NBR
Note on materials	RoHS compliant
LABS (PWIS) conformity	VDMA24364-B1/B2-L

Standard flow rate qn as a function of differential pressure p1-2 – pneumatic connection G1/4, NPT1/4

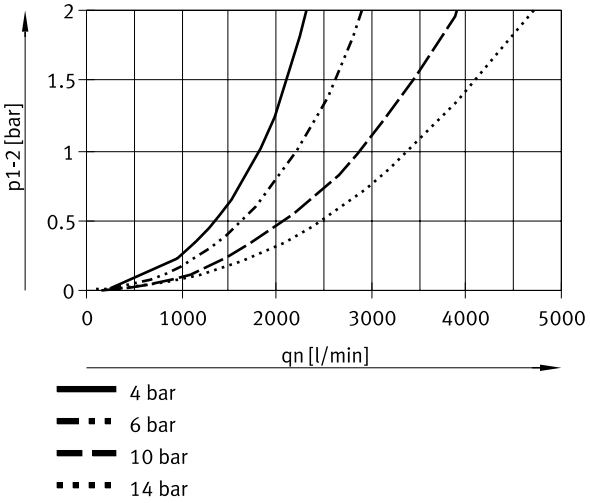

Datasheet

Standard flow rate qn as a function of differential pressure p1-2 – pneumatic connection G3/8, NPT3/8

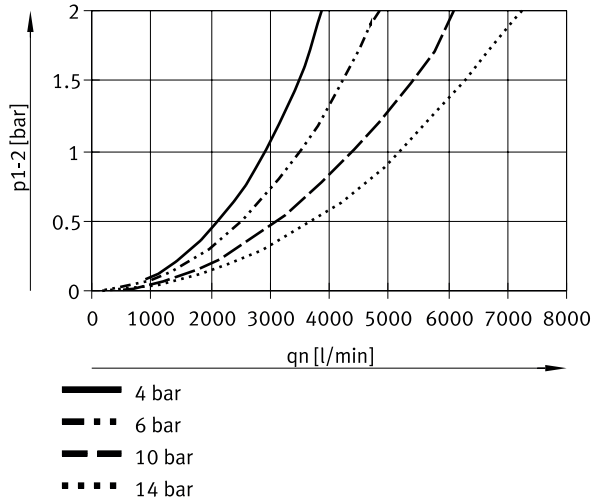

Standard flow rate qn as a function of differential pressure p1-2 – pneumatic connection G1/2, NPT1/2

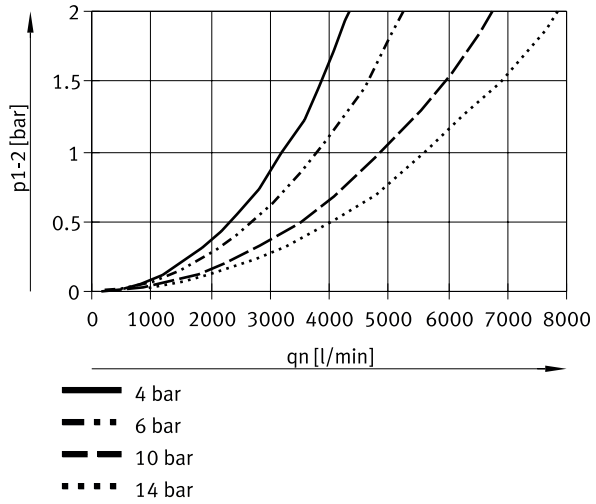

Dimensions

Dimensions – [V] Condensate drain, fully automatic Download CAD data www.festo.com

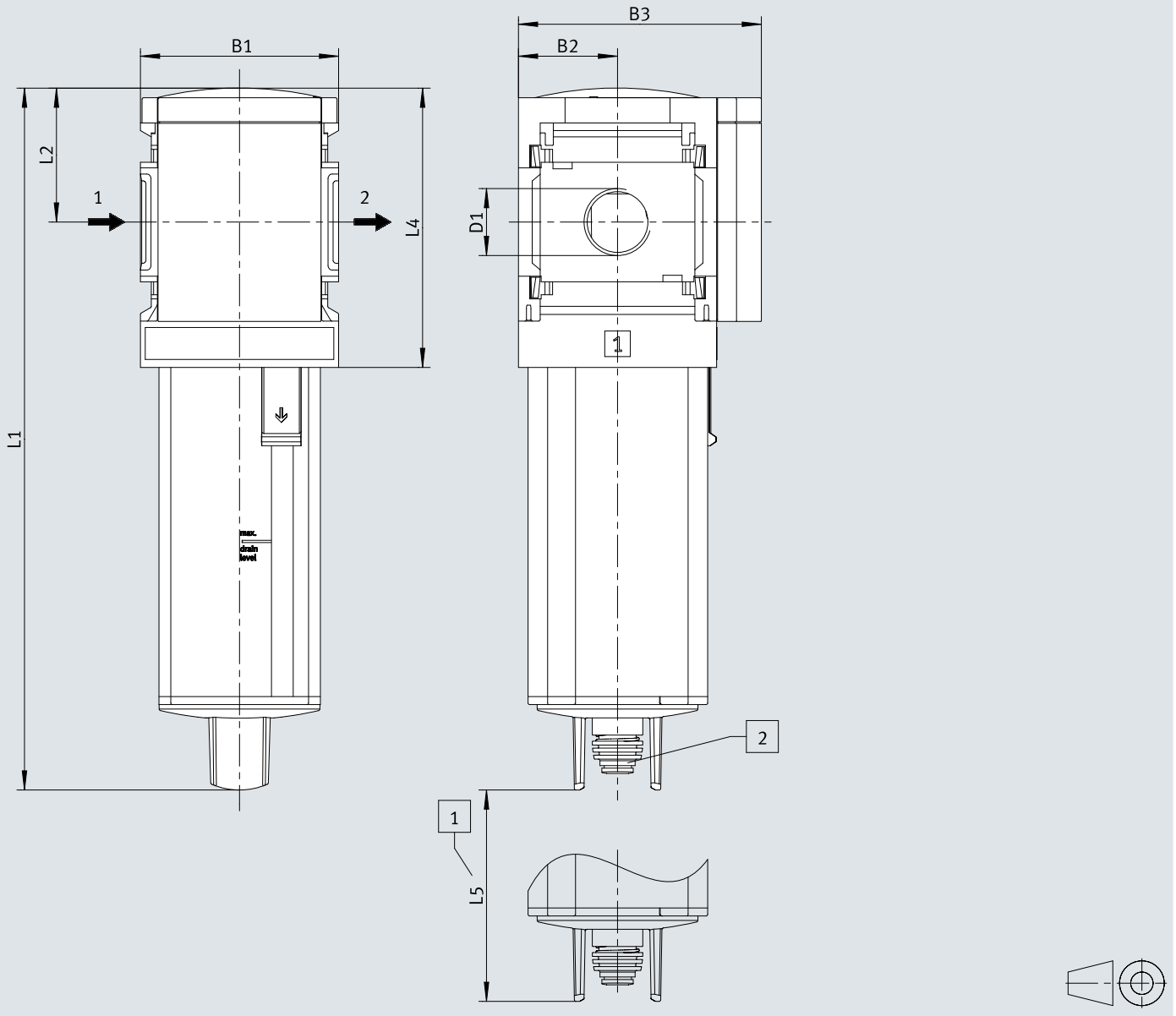

[1] Installation dimension
[2] Barbed connector for plastic tubing PUN(-H)-8x1.25

	B1	B2	B3	D1	L1	L2	L4	L5
MS6-LWS-1/4-...-V	62	31	76	G1/4	220	42	88	64
MS6-LWS-3/8-...-V				G3/8				
MS6-LWS-1/2-...-V				G1/2				

1) Note: This product complies with ISO 1179-1 and ISO 228-1.

Dimensions

Dimensions – [E2]/[E3]/[E4] Fully automatic, electrically actuated Download CAD data www.festo.com

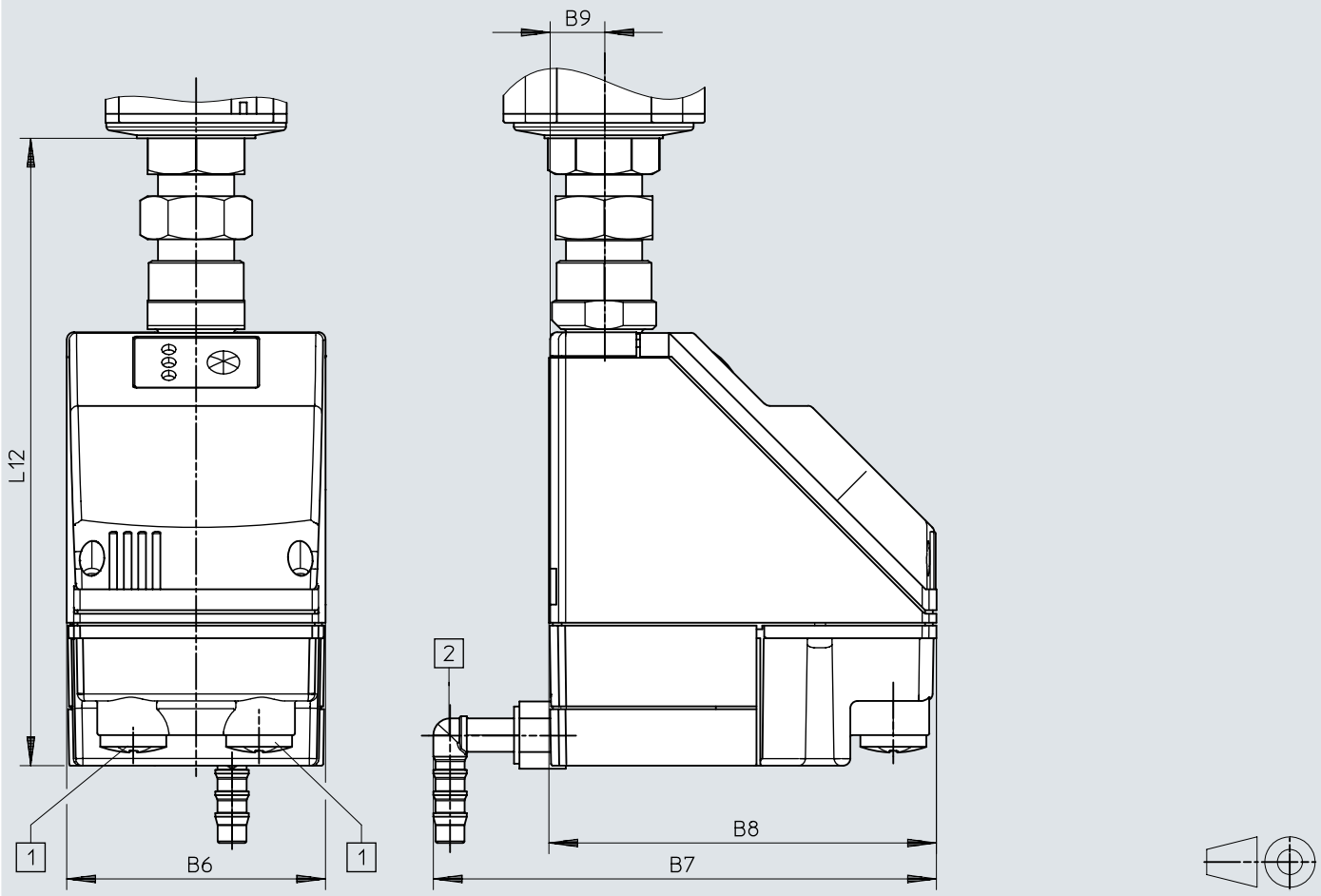

[1] Electrical connection: screw terminal PG9
[2] Connection can be rotated 360° for plastic tubing PUN-H-12x2

	B6	B7	B8	B9	L12
MS6-LWS-...-E2/E3/E4	72	140	108	15	174,5

Ordering data

Ordering data



Size	Pneumatic connection, port 1	Condensate drain	Product weight	Part no.	Type
6	G1/4	Fully automatic	820 g	**564868**	**MS6-LWS-1/4-U-V**
	G3/8			**564869**	**MS6-LWS-3/8-U-V**
	G1/2			**564870**	**MS6-LWS-1/2-U-V**

Ordering data – Modular product system

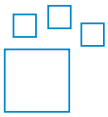

Short type code	Part no.	Type
MS6-LWS	**564858**	**MS6-LWS**

Peripherals

Peripherals overview

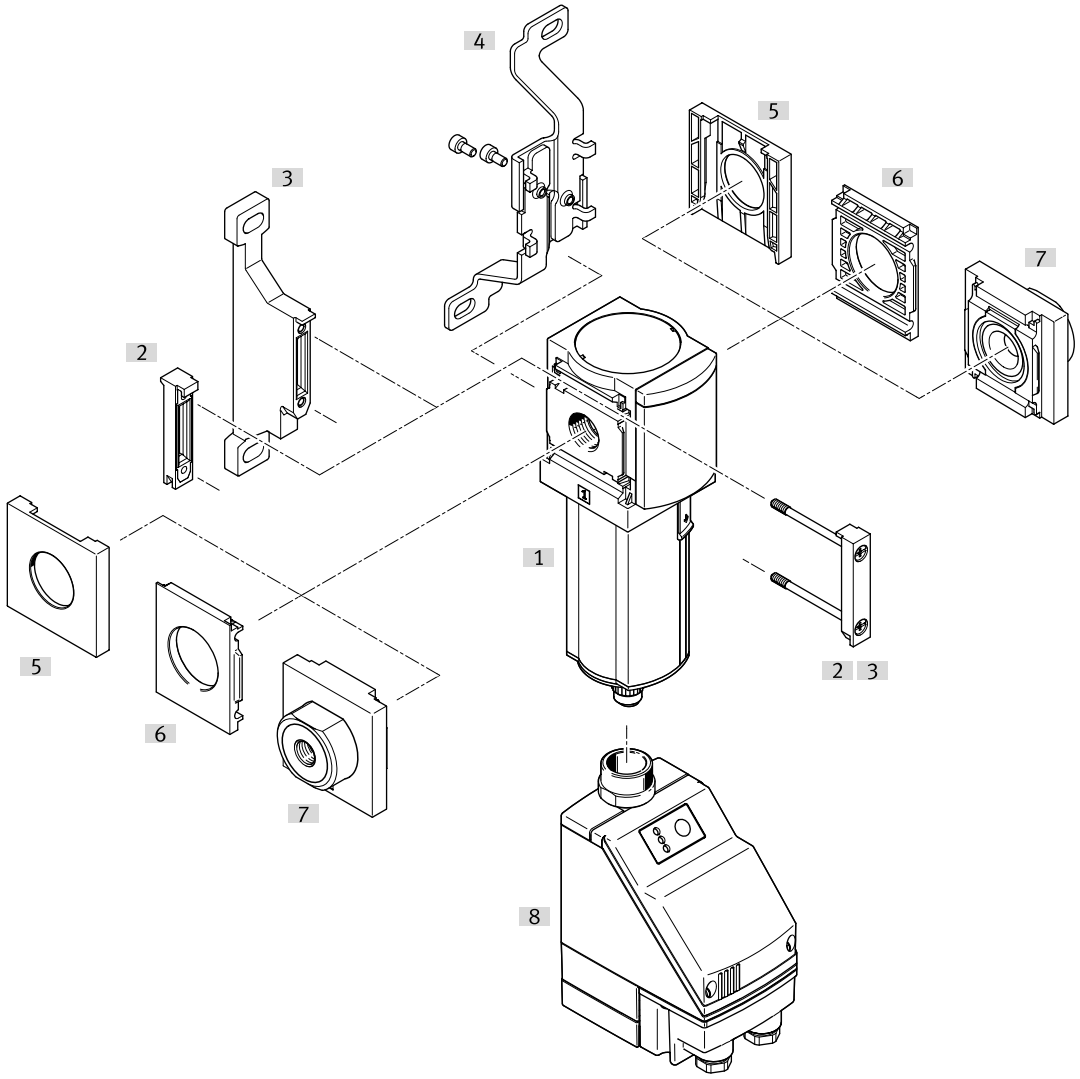

Accessories			→ Link
	Type/order code	Description	
[1]	Water separator MS6-LWS		ms6-lws
[2]	Module connector MS6-MV		12
[3]	Mounting bracket MS6-WP	Order code [WP]	12
[3]	Mounting bracket MS6-WPB	Without illustration	12
[3]	Mounting bracket MS6-WPE	Without illustration	12
[3]	Mounting bracket MS6-WPM	Without illustration	12
[4]	Mounting bracket MS6-WB	Order code [WB]	12
[5]	Cover cap MS6-END		12
[6]	Mounting plate MS6-AEND	Module connector MS4/6-MV [2] or mounting bracket MS4-WP, WPB, WPE, WPM [3] is required for mounting.	12
[7]	Connecting plate MS6-AG.../-AQ...	Order code [AG...], [AQ...]; module connector MS6-MV1 [2] or mounting bracket MS6-WP, WPB, WPE, WPM [3] is required for mounting.	13
[8]	Condensate drain, fully automatic, electrically controlled PWEA	Order code [E2], [E3], [E4]	ms6-lws

Accessories

Module connector MS6-MV1



Material module connector	LABS (PWIS) conformity	Product weight	Part no.	Type
POM, High-alloy stainless steel	VDMA24364-B1/B2-L	33 g	**8119204**	**MS6-MV1**

Mounting bracket MS6-WP...



Material bracket	LABS (PWIS) conformity	Product weight	Part no.	Type
	VDMA24364-B1/B2-L		**1025936**	**MS6-WPE**
Die-cast aluminium		76 g	**532195**	**MS6-WP**
			541544	**MS6-WP-EX**
		115 g	**526074**	**MS6-WPB**
			541542	**MS6-WPB-EX**
		144 g	**526073**	**MS6-WPM-D**
		154 g	**532186**	**MS6-WPM-2D**

Mounting bracket MS6-WB



Material bracket	LABS (PWIS) conformity	Product weight	Part no.	Type
Steel	VDMA24364-B1/B2-L	121 g	**532196**	**MS6-WB**

Cover cap MS6-END



Material housing	LABS (PWIS) conformity	Part no.	Type
Reinforced PA	VDMA24364-B1/B2-L	**538780**	**MS6-END**

Mounting plate MS6-AEND



Material housing	LABS (PWIS) conformity	Product weight	Part no.	Type
Reinforced PA	VDMA24364-B1/B2-L	11.1 g	**535408**	**MS6-AEND1**

Accessories

Connecting plate-SET MS6-AG.../-AQ...



Pneumatic connection, port 1	Material sub-base	LABS (PWIS) conformity	Product weight	Part no.	Type
G1/4	Die-cast aluminium	VDMA24364-B1/B2-L	300 g	**526080**	**MS6-AGB**
				541538	**MS6-AGB-EX**
G3/8				**526081**	**MS6-AGC**
				541539	**MS6-AGC-EX**
G1/2				**526082**	**MS6-AGD**
				541540	**MS6-AGD-EX**
G3/4				**526083**	**MS6-AGE**
				541541	**MS6-AGE-EX**
1/4 NPT				**526076**	**MS6N-AQN**
3/8 NPT				**526077**	**MS6N-AQP**
1/2 NPT				**526078**	**MS6N-AQR**
3/4 NPT				**526079**	**MS6N-AQS**