Water separator MS12-LWS

FESTO

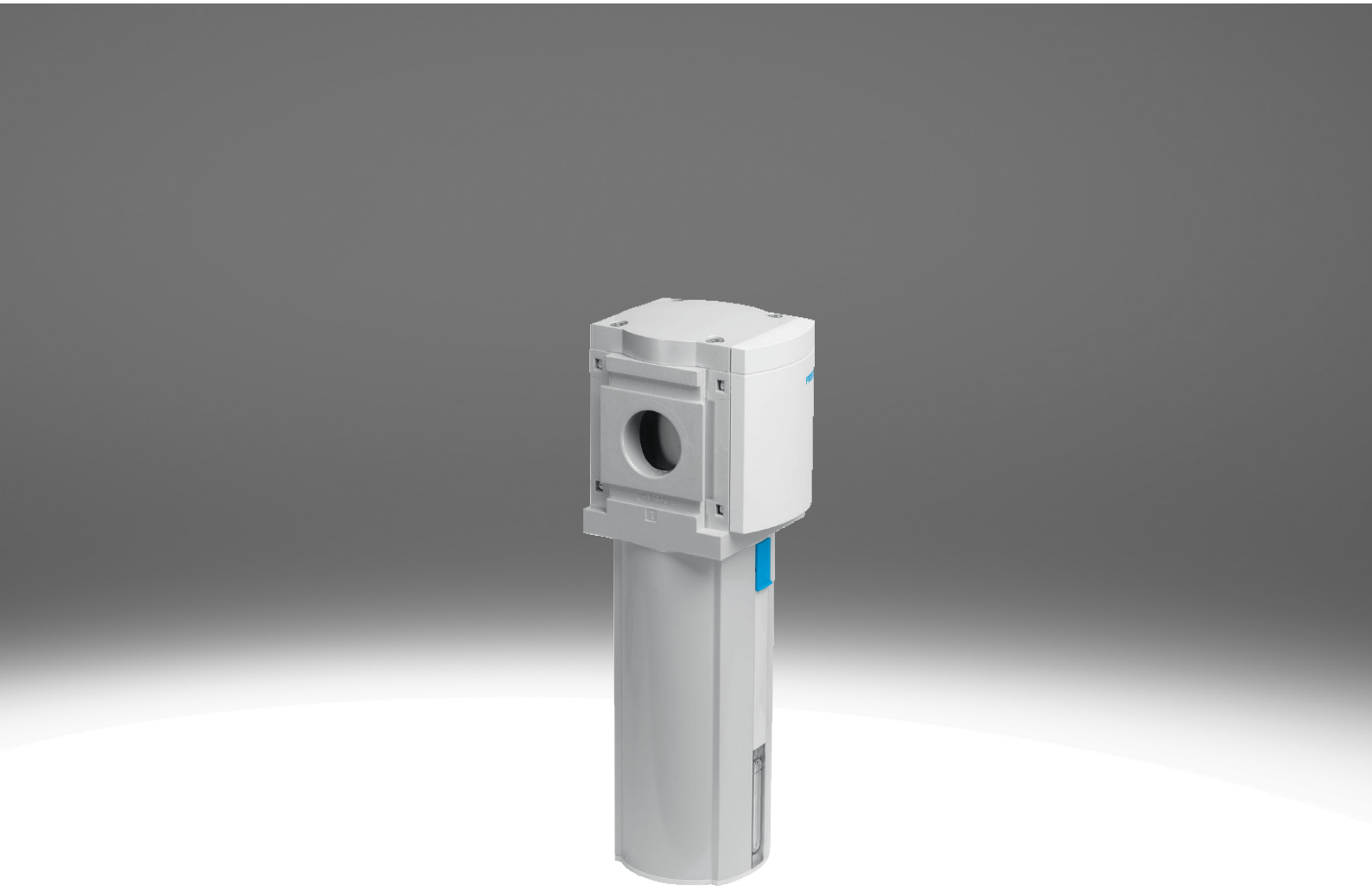

Characteristics

At a glance

The water separator removes condensate from the compressed air.
- Constantly high condensate separation (99%) up to the maximum flow rate
- Bowl guard tanks to integrated metal bowl.
- Available with fully automatic or fully automatic, electrically actuated condensate drain
- Product complies with ISO 1179-1 and ISO 228-1

Ordering data - modular system

Link ms12-lws

Configurable product
This product and all its product options can be ordered online via the configurator.

Diagrams

Link ms12-lws

The diagrams shown in this document are also available online. These can be used to display precise values.

Function

[LWS]	Water separator

The centrifugal separator removes condensate from the compressed air. It has a high separation efficiency, which protects the downstream pneumatic components from moisture, corrosion and malfunctions.

Pneumatic connection

Depending on the size, different connection types can be selected:
- Connecting plates with female thread
- Module without connecting thread, without connecting plate

Condensate drain

The condensate is drained by a fully automatic condensate drain valve with float actuation or a fully automatic electric condensate drain valve.

Type of mounting

[WP]	Mounting bracket basic design



- For wall mounting a single device or a service unit combination

Flow direction

Available with flow in the opposite direction.

Type code

001	Series	
MS	MS series	

002	Size	
12	Grid dimension 124 mm	

003	Function	
LWS	Water separator	

004	Pneumatic connection	
AGF	Sub-base G1	
AGG	Connecting plate G1 1/4	
AGH	Connecting plate G1 1/2	
AGI	Sub-base G2	
AQT	Sub-base 1 NPT	
AQU	Sub-base 1 1/4 NPT	
AQV	Sub-base 1 1/2 NPT	
AQW	Sub-base 2 NPT	
G	Module without connecting thread, without sub-base	

005	Bowl type	
U	Aluminium	

006	Condensate drain	
E2	External fully automatic condensate drain, electric, 110 V AC, connection terminals	
E3	External fully automatic condensate drain, electric, 230 V AC, connection terminals	
E4	External fully automatic condensate drain, electric, 24 V DC, connection terminals	
V	Fully automatic, normally open	
VC	Fully automatic, normally closed	

007	Type of mounting	
	Without mounting bracket	
WP	Mounting bracket basic design	

008	Flow direction	
	Flow direction from left to right	
Z	Flow direction from right to left	

Datasheet

General technical data

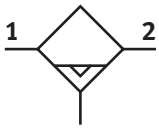

Pneumatic connection, port 1 [1]	–
Pneumatic connection, port 2 [2]	–
Size	12
Design	Centrifugal separator
Type of mounting	Either: Inline installation With mounting bracket With accessories
Mounting position	Vertical +/-5°
Air purity class at output [3]	Compressed air to ISO 8573-1:2010 [-:7:4], Compressed air to ISO 8573-1:2010 [7:7:4]
Bowl guard	Integrated as metal bowl
Condensate drain	Fully automatic, Fully automatic, electrically actuated
Degree of condensate separation	99%
Max. condensate volume	400 ml

1) Via connecting plate [AG...]: G1, G1 1/4, G1 1/2 or G2; [AQ...]: NPT1, NPT1 1/4, NPT1 1/2 or NPT2; as a module without connecting thread/plate [G]: -
2) Via connecting plate [AG...]: G1, G1 1/4, G1 1/2 or G2; [AQ...]: NPT1, NPT1 1/4, NPT1 1/2 or NPT2; as a module without connecting thread/plate [G]: -
3) With variant E2, E3 or E4: ISO 8573-1:2010 [–:7:4]

Flow rates

Standard nominal flow rate (standardised to DIN 1343)[1]	25,000 l/min
Max. standard flow rate [2]	40,000 l/min

1) Tolerance: ±15%; measured at p1 = 6 bar and Δp = 0.5 bar
2) Tolerance: ±15%; measured at p1 = 6 bar and Δp = 0.5 bar

Operating and environmental conditions

Condensate drain	Fully automatic
Operating pressure	2 ... 12 bar
Operating medium [1]	Compressed air to ISO 8573-1:2010 [7:-:-]
Ambient temperature	5 ... 60°C
Media temperature	5 ... 60°C
Corrosion resistance class CRC [2]	2 - Moderate corrosion stress

1) Compressed air according to ISO 8573-1:2010 [7:9:-] applies to fully automatic condensate drain
2) More information www.festo.com/x/topic/crc

Operating and environmental conditions

Condensate drain	Fully automatic, Fully automatic, electrically actuated
Operating pressure	1 ... 16 bar
Operating medium [1]	Compressed air to ISO 8573-1:2010 [-:-:-] Compressed air to ISO 8573-1:2010 [7:-:-]
Ambient temperature	1 ... 60°C
Media temperature	1 ... 60°C
Corrosion resistance class CRC [2]	2 - Moderate corrosion stress

1) Compressed air according to ISO 8573-1:2010 [7:9:-] applies to fully automatic condensate drain
2) More information www.festo.com/x/topic/crc

Datasheet

Weight	
Product weight [1)]	6.3 g

1) Water separator with electrically actuated condensate drain, fully automatic [E2], [E3], [E4]: 7000 g

Materials	
Material housing	Die-cast aluminium
Material bowl	Wrought aluminium alloy
Material screen	PA
Material spin disc	POM
Material covering	Reinforced PA
Material sub-base	Die-cast aluminium
Material mounting bracket	Die-cast aluminium
Material module connector	Die-cast aluminium
Material cup seal	NBR
Material separating plate	POM
Note on materials	RoHS compliant
LABS (PWIS) conformity	VDMA24364-B1/B2-L

Standard flow qn as a function of differential pressure Δp1-2 – MS6-LF-1/4 (grade of filtration 5 µm)

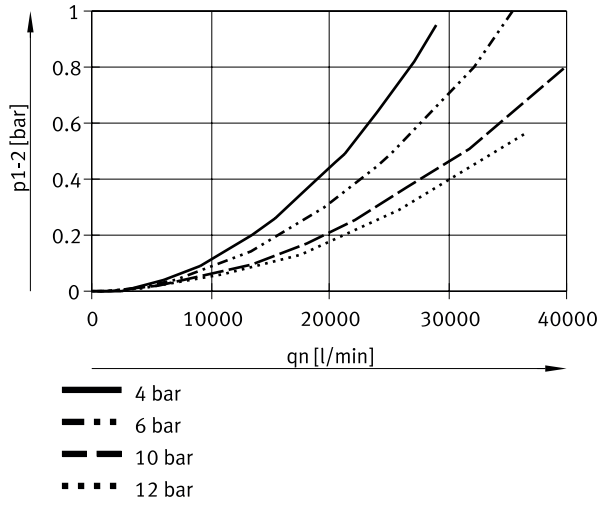

Dimensions

Dimensions – Module without connecting thread, without connecting plate
G, [V] condensate drain, fully automatic

Download CAD data www.festo.com

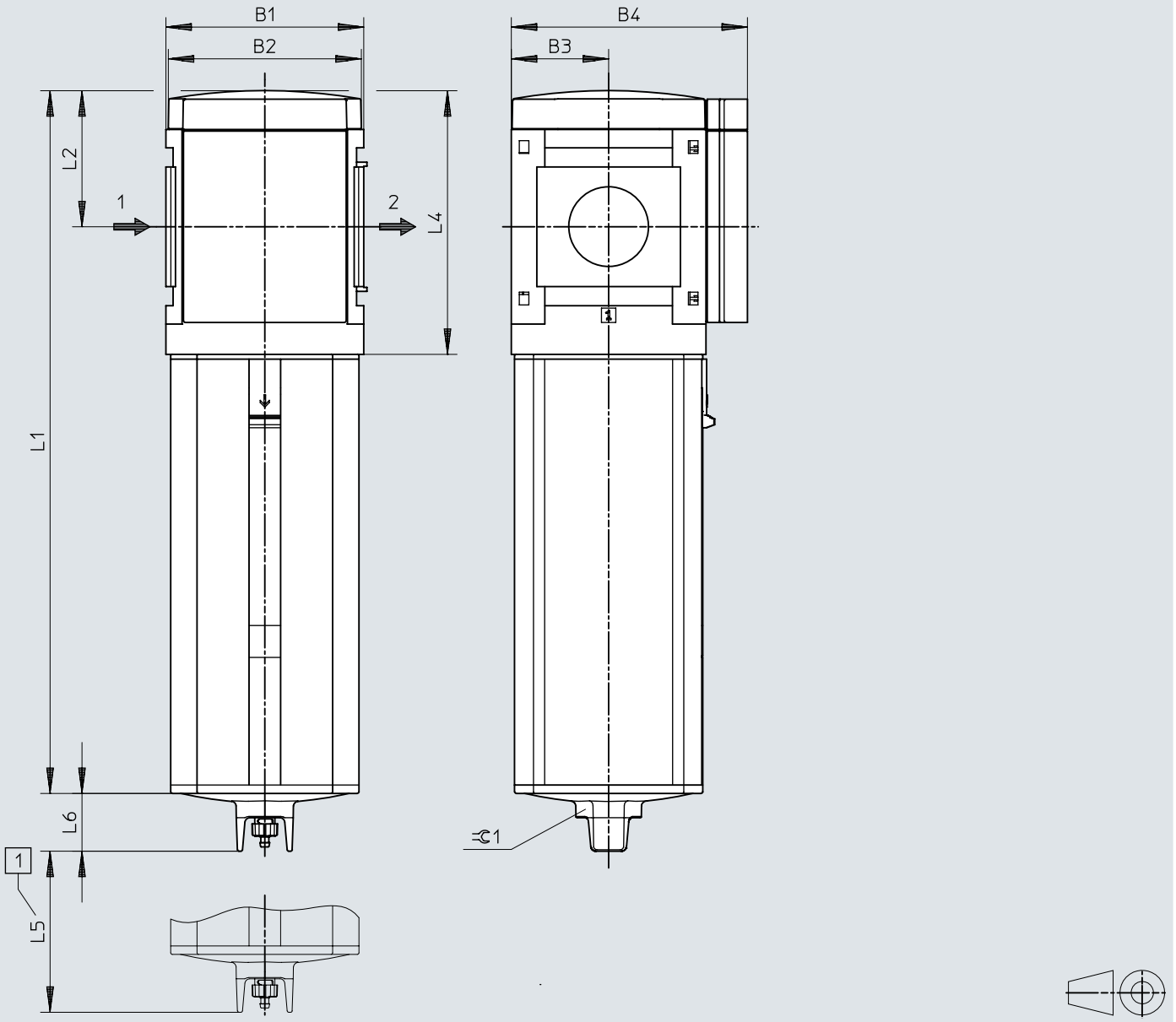

[1] Installation dimension
[2] Note: Dimensions with connecting plate → ms12-ag; mounting bracket → ms12-wp

	B1	B2	B3	B4	L1	L2	L4	L5	L6	⌀ 1
MS12-LWS-G	124	122	61	148	441	85	165	60	36	36

Dimensions

Dimensions – [V] Condensate drain, fully automatic Download CAD data www.festo.com

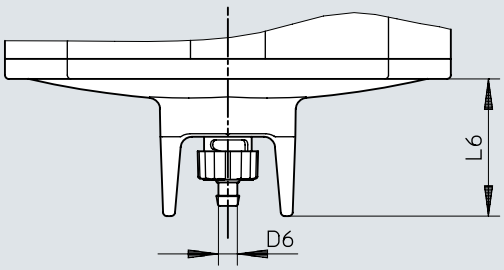

	D6	L6
MS12-LWS-...-V	5,6	36

Dimensions

Dimensions – [E2]/[E3]/[E4] Fully automatic, electrically actuated Download CAD data www.festo.com

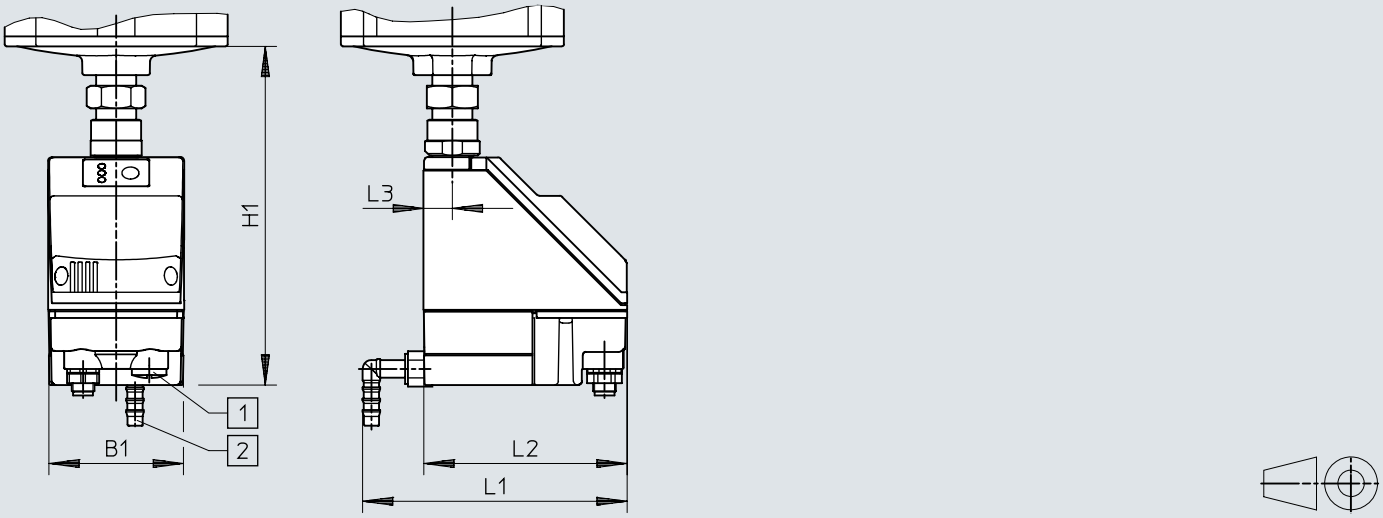

[1] Electrical connection: screw terminal PG9
[2] Connection can be rotated 360° for plastic tubing PUN-H-12x2

	B1	H1	L1	L2	L3
MS12-LWS-...-E2/E3/E4	72	179	140	108	15

Ordering data

Ordering data



Size	Condensate drain	Product weight	Part no.	Type
12	Fully automatic	6.3 g	**8005550**	**MS12-LWS-G-U-V**

Ordering data – Modular product system

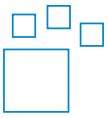

Short type code	Part no.	Type
MS12-LWS	**569827**	**MS12-LWS**

Peripherals

Peripherals overview

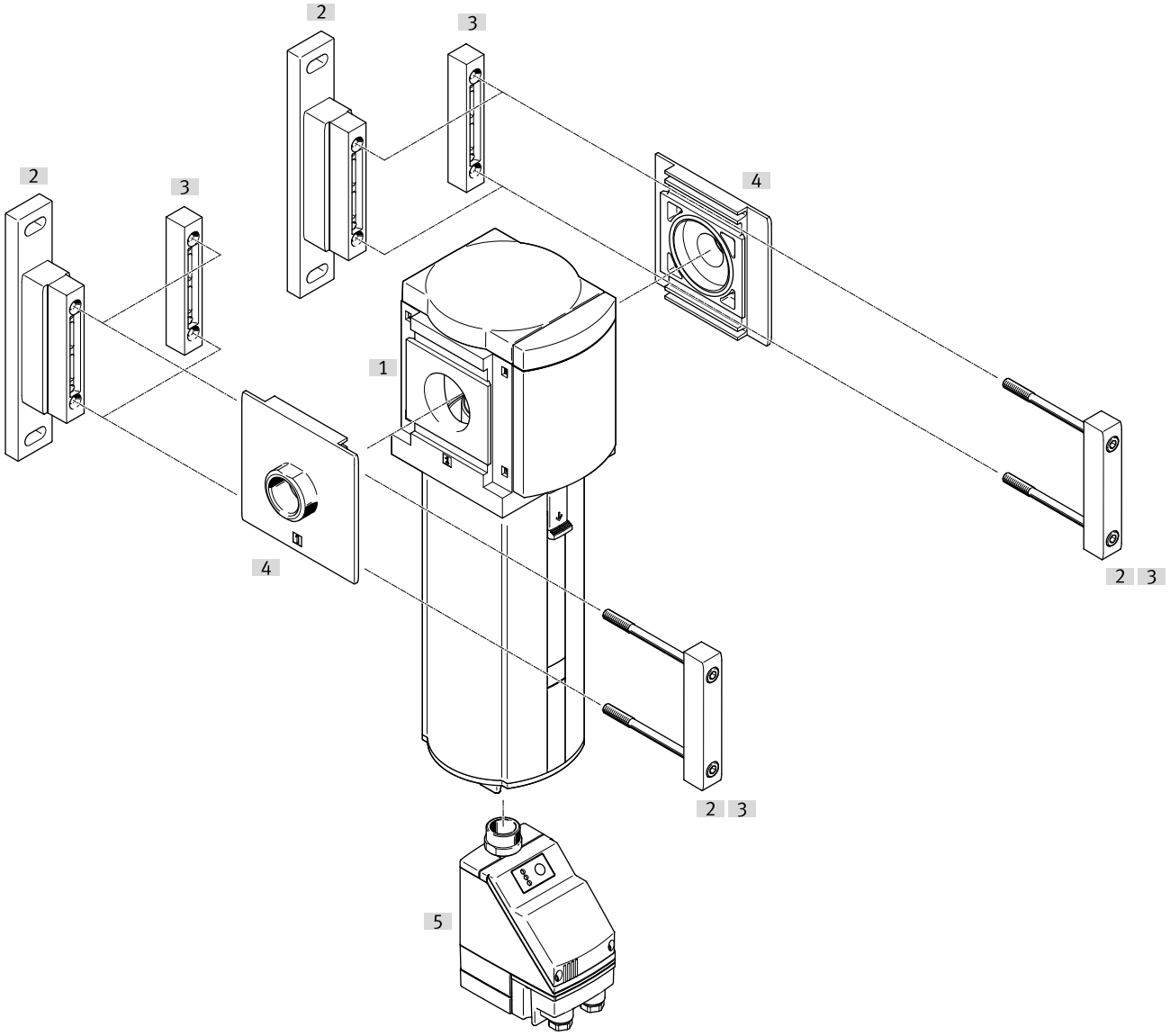

Accessories			→ Link
	Type/order code	Description	
[1]	Water separator MS12-LWS		ms12-lws
[2]	Mounting bracket MS12-WP	Order code [WP]; for single device or service unit combinations	11
[3]	Module connector MS12-MV	For device combinations and individual devices with connecting plate	11
[4]	Connecting plate-SET MS12-AG.../-AQ...	Order code [AG...]; for device combinations	11
[5]	Condensate drain, fully automatic, electrically controlled PWEA	Order code [E2], [E3], [E4]	ms12-lws

Accessories

Module connector MS6-MV1



Size	Product weight	Part no.	Type
12	500 g	**537134**	**MS12-MV**

Mounting bracket MS12-WP



Size	Product weight	Part no.	Type
12	700 g	**537133**	**MS12-WP**

Connecting plate SET MS12-AG

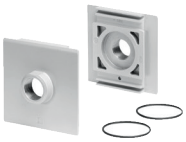

Size	Pneumatic connection, port 1	Product weight	Part no.	Type
12	G1	1,300 g	**537135**	**MS12-AGF**
	G1 1/4		**537136**	**MS12-AGG**
	G1 1/2		**537137**	**MS12-AGH**
	G2		**537138**	**MS12-AGI**
	1 NPT		**537139**	**MS12-AQT**
	1 1/4 NPT		**537140**	**MS12-AQU**
	1 1/2 NPT		**537141**	**MS12-AQV**
	2 NPT		**537142**	**MS12-AQW**