Water separators MS-LWS, MS series

Key features

Service unit components of the MS series

Solutions for every application

With its large product range, highly effective components and a wide choice of functions, the MS series from Festo offers a complete concept for compressed air preparation. It is suitable for simple standard applications as well as application-specific solutions with very high quality requirements. Available as individual components, pre-assembled combinations ex-stock, application-specific combinations or complete turnkey solutions. The five sizes in the MS series achieve maximum flow rates with low space requirements.

Freely combinable function modules

Pressure regulators, on/off and soft-start valves with safety function, filters, pressure and flow sensors, dryers, sensors and lubricators can be assembled into a suitable solution for every task. The modular structure enables the components to be combined as required. The simple connection system saves time because the entire combination doesn't need to be disassembled when replacing individual modules.
Many of the components are also UL and ATEX certified.

CAD models and configurator

Convenient tools for planning and selecting application-specific individual components and combinations. The product configurator can be used to configure customised solutions quickly and to transfer the order data without any hassle.

Engineering tools

Selection tool for choosing the right combination of service unit components without oversizing, and with the right air purity class:
→ **www.festo.com/engineering/service unit**

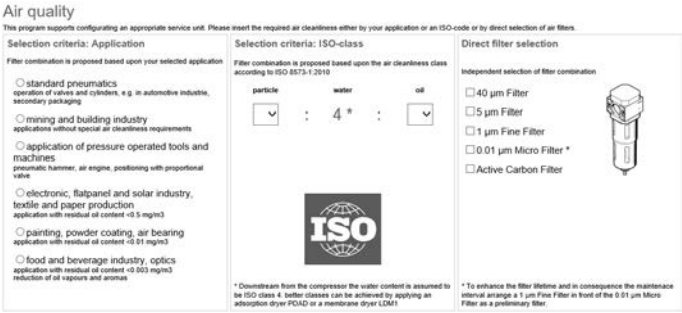

Integrated sensors

Pressure and flow sensors

- Maximum machine availability thanks to controlled processes
- Reliable compressed air preparation and supply for systems
- Integrated or stand-alone
- Easy to connect with M8/M12 plug

Safety functions

Soft-start/quick exhaust valves MS6-SV/MS9-SV

- Fast and reliable exhausting of systems up to Performance Level e, certified to EN ISO 13849-1
- Integrated soft-start function

Saving energy

Combinations of service unit components MSE6

- Fully automatic monitoring and regulation of compressed air supply
- Automatic shut-off of the compressed air in stand-by mode
- Detection and notification of leakages
- Condition monitoring of relevant process data

Intelligent mix of sizes

- Optimum flow rate with a size that is up to 18% smaller
- Excellent energy efficiency
- Cost-optimised combinations – save up to 30%!

Size differences

Size	MS2	MS4	MS6	MS9	MS12
Grid dimension [mm]	25	40	62	90	124
Connection sizes	M5, QS-6	G1/8, G1/4, G3/8	G1/4, G3/8, G1/2, G3/4	G1/2, G3/4, G1, G1 1/4, G1 1/2	G1, G1 1/4, G1 1/2, G2
Standard nominal flow rate qnN[1] [l/min]	350	1800	6500	20000	22000

1) Using pressure regulator MS-LR as an example

Key features

Note

Information

The next few pages provide a brief overview of the product range for the MS series service unit components.

You can find detailed information and all the technical data in the documentation for the relevant service unit component.

Accessories such as connecting plates or mounting brackets can be ordered either via the configurator or separately.

Design of a service unit combination

The order of the individual service unit components within a combination is relevant for safety and functionality. The service unit components cannot be combined in any order in the flow direction. They are subject to restrictions and rules.

The configurator for the service unit MSB is a reliable and convenient way of arranging individual service unit components and ensures compliance with the applicable rules. As a result, you get a fully assembled unit, including UL or ATEX certification, if necessary.
When combining a unit from individually configured and ordered service unit components, the following points must be adhered to under all circumstances.

- Regulators MS-LFR/LR/LRP are only permissible in the flow direction with the same or decreasing pressure regulation range
- Filters MS-LFR/LF/LFM/LFX are only permissible in the flow direction with an increasing grade of filtration
- Lubricators MS-LOE are not permitted in the flow direction upstream of a filter MS-LFR/LFM/LF/LFX, water separator MS-LWS or membrane air dryer MS-LDM1
- A micro filter MS-LFM must be installed in the flow direction upstream of an activated carbon filter MS-LFX or membrane air dryer MS-LDM1
- A flow sensor SFAM cannot be installed directly downstream of a regulator MS-LFR/LR; a branching module MS-FRM must be positioned between them
- A soft-start/quick exhaust valve MS-SV must be the last service unit component in the flow direction

Product range for service unit components of the MS series

Type	Description	Size	Pneumatic connection					
			Push-in connector	Female thread			Connecting plate with thread	
				M	G	NPT	G	NPT
Combinations								
Combinations of service unit components MSB-FRC								Datasheets ➔ Internet: msb
	Combinations of filter regulator and lubricator	4	–	–	1/8, 1/4	–	–	–
		6	–	–	1/4, 3/8, 1/2	–	–	–
Combinations of service unit components MSB								Datasheets ➔ Internet: msb
	7 combinations, predefined	4	–	–	1/4	–	–	–
		6	–	–	1/2	–	–	–
	Freely configurable combinations	4	–	–	1/8, 1/4	–	1/8, 1/4, 3/8	1/8, 1/4, 3/8
		6	–	–	1/4, 3/8, 1/2	–	1/4, 3/8, 1/2, 3/4	1/4, 3/8, 1/2, 3/4
		9	–	–	3/4, 1	3/4, 1	1/2, 3/4, 1, 1 1/4, 1 1/2	1/2, 3/4, 1, 1 1/4, 1 1/2
Combinations of service unit components MSE6								Datasheets ➔ Internet: mse6
	Combinations with fieldbus connection for measuring pressure, flow rate and consumption	6	–	–	–	–	1/2	–

Key features

Product range for service unit components of the MS series

Type	Description	Size	Pneumatic connection					
			Push-in connector	Female thread			Connecting plate with thread	
				M	G	NPT	G	NPT
Individual devices								
Filter regulators MS-LFR							Datasheets ➔ Internet: ms2-lfr; ms4-lfr; ms6-lfr; ms9-lfr; ms12-lfr	
	Filter and pressure regulator in a single device, grade of filtration 5 or 40 µm	2	QS-6	M5	–	–	–	–
		4	–	–	1/8, 1/4	–	1/8, 1/4, 3/8	1/8, 1/4, 3/8
		6	–	–	1/4, 3/8, 1/2	–	1/4, 3/8, 1/2, 3/4	1/4, 3/8, 1/2, 3/4
		9	–	–	3/4, 1	3/4, 1	1/2, 3/4, 1, 1 1/4, 1 1/2	1/2, 3/4, 1, 1 1/4, 1 1/2
		12	–	–	–	–	1, 1 1/4, 1 1/2, 2	–
Filter regulators MS-LFR-B							Datasheets ➔ Internet: ms4-lfr-b; ms6-lfr-b	
	Filter and pressure regulator in a single device in polymer housing, grade of filtration 5 or 40 µm	4	–	–	1/4	–	–	–
		6	–	–	1/2	–	–	–
Filters MS-LF							Datasheets ➔ Internet: ms4-lf; ms6-lf; ms9-lf; ms12-lf	
	Grade of filtration 5 or 40 µm	4	–	–	1/8, 1/4	–	1/8, 1/4, 3/8	1/8, 1/4, 3/8
		6	–	–	1/4, 3/8, 1/2	–	1/4, 3/8, 1/2, 3/4	1/4, 3/8, 1/2, 3/4
		9	–	–	3/4, 1	3/4, 1	1/2, 3/4, 1, 1 1/4, 1 1/2	1/2, 3/4, 1, 1 1/4, 1 1/2
		12	–	–	–	–	1, 1 1/4, 1 1/2, 2	–
Fine and micro filters MS-LFM							Datasheets ➔ Internet: ms4-lfm; ms6-lfm; ms9-lfm; ms12-lfm	
	Grade of filtration 0.01 or 1 µm	4	–	–	1/8, 1/4	–	1/8, 1/4, 3/8	1/8, 1/4, 3/8
		6	–	–	1/4, 3/8, 1/2	–	1/4, 3/8, 1/2, 3/4	1/4, 3/8, 1/2, 3/4
		9	–	–	3/4, 1	3/4, 1	1/2, 3/4, 1, 1 1/4, 1 1/2	1/2, 3/4, 1, 1 1/4, 1 1/2
		12	–	–	–	–	1, 1 1/4, 1 1/2, 2	–
Activated carbon filters MS-LFX							Datasheets ➔ Internet: ms4-lfx; ms6-lfx; ms9-lfx; ms12-lfx	
	For removing liquid and gaseous oil particles	4	–	–	1/8, 1/4	–	1/8, 1/4, 3/8	1/8, 1/4, 3/8
		6	–	–	1/4, 3/8, 1/2	–	1/4, 3/8, 1/2, 3/4	1/4, 3/8, 1/2, 3/4
		9	–	–	3/4, 1	3/4, 1	1/2, 3/4, 1, 1 1/4, 1 1/2	1/2, 3/4, 1, 1 1/4, 1 1/2
		12	–	–	–	–	1, 1 1/4, 1 1/2, 2	–
Water separators MS-LWS							Datasheets ➔ Internet: ms6-lws; ms9-lws; ms12-lws	
	Remove condensate from compressed air, maintenance-free	6	–	–	1/4, 3/8, 1/2	–	1/4, 3/8, 1/2, 3/4	1/4, 3/8, 1/2, 3/4
		9	–	–	3/4, 1	3/4, 1	1/2, 3/4, 1, 1 1/4, 1 1/2	1/2, 3/4, 1, 1 1/4, 1 1/2
		12	–	–	–	–	1, 1 1/4, 1 1/2, 2	–

Key features

Product range for service unit components of the MS series

Type	Description	Size	Pneumatic connection					
			Push-in connector	Female thread			Connecting plate with thread	
				M	G	NPT	G	NPT
Individual devices								
Pressure regulators MS-LR								Datasheets ➔ Internet: ms2-lr; ms4-lr; ms6-lr; ms9-lr; ms12-lr
	For setting the required operating pressure, 4 pressure regulation ranges	2	QS-6	M5	–	–	–	–
		4	–	–	1/8, 1/4	–	1/8, 1/4, 3/8	1/8, 1/4, 3/8
		6	–	–	1/4, 3/8, 1/2	–	1/4, 3/8, 1/2, 3/4	1/4, 3/8, 1/2, 3/4
		9	–	–	3/4, 1	3/4, 1	1/2, 3/4, 1, 1 1/4, 1 1/2	1/2, 3/4, 1, 1 1/4, 1 1/2
		12	–	–	–	–	1, 1 1/4, 1 1/2, 2	–
Pressure regulators MS-LR-B								Datasheets ➔ Internet: ms4-lr-b; ms6-lr-b
	For setting the required operating pressure, in polymer housing	4	–	–	1/4	–	–	–
		6	–	–	1/2	–	–	–
Pressure regulators MS-LRB								Datasheets ➔ Internet: ms4-lrb; ms6-lrb
	For configuring a regulator manifold with independent pressure regulation ranges. Pressure output is to the front or rear.	4	–	–	1/4	–	1/8, 1/4, 3/8	–
		6	–	–	1/2	–	1/4, 3/8, 1/2, 3/4	–
Precision pressure regulators MS-LRP								Datasheets ➔ Internet: ms6-lrp
	For precisely setting the required operating pressure, 4 pressure regulation ranges, pressure hysteresis 0.02 bar	6	–	–	1/4, 3/8, 1/2	–	1/4, 3/8, 1/2, 3/4	1/4, 3/8, 1/2, 3/4
Precision pressure regulators MS-LRPB								Datasheets ➔ Internet: ms6-lrpb
	For configuring a regulator manifold with independent pressure regulation ranges. Pressure output is to the front or rear.	6	–	–	1/2	–	1/4, 3/8, 1/2, 3/4	–
Lubricators MS-LOE								Datasheets ➔ Internet: ms4-loe; ms6-loe; ms9-loe; ms12-loe
	Add a precisely adjustable amount of oil to the compressed air. The amount of oil mist is proportional to the compressed air flow rate.	4	–	–	1/8, 1/4	–	1/8, 1/4, 3/8	1/8, 1/4, 3/8
		6	–	–	1/4, 3/8, 1/2	–	1/4, 3/8, 1/2, 3/4	1/4, 3/8, 1/2, 3/4
		9	–	–	3/4, 1	3/4, 1	1/2, 3/4, 1, 1 1/4, 1 1/2	1/2, 3/4, 1, 1 1/4, 1 1/2
		12	–	–	–	–	1, 1 1/4, 1 1/2, 2	–

Key features

Product range for service unit components of the MS series

Type	Description	Size	Pneumatic connection					
			Push-in connector	Female thread			Connecting plate with thread	
				M	G	NPT	G	NPT
Individual devices								
On/off valves MS-EM							Datasheets ➔ Internet: ms4-em; ms6-em; ms9-em; ms12-em	
	Manually actuated on/off valve for pressurising and exhausting pneumatic systems.	4	–	–	1/8, 1/4	–	1/8, 1/4, 3/8	1/8, 1/4, 3/8
		6	–	–	1/4, 3/8, 1/2	–	1/4, 3/8, 1/2, 3/4	1/4, 3/8, 1/2, 3/4
		9	–	–	3/4, 1	3/4, 1	1/2, 3/4, 1, 1 1/4, 1 1/2	1/2, 3/4, 1, 1 1/4, 1 1/2
		12	–	–	–	–	1, 1 1/4, 1 1/2, 2	–
On/off valves MS-EE							Datasheets ➔ Internet: ms4-ee; ms6-ee; ms9-ee; ms12-ee	
	Electrically actuated on/off valve for pressurising and exhausting pneumatic systems.	4	–	–	1/8, 1/4	–	1/8, 1/4, 3/8	1/8, 1/4, 3/8
		6	–	–	1/4, 3/8, 1/2	–	1/4, 3/8, 1/2, 3/4	1/4, 3/8, 1/2, 3/4
		9	–	–	3/4, 1	3/4, 1	1/2, 3/4, 1, 1 1/4, 1 1/2	1/2, 3/4, 1, 1 1/4, 1 1/2
		12	–	–	–	–	1, 1 1/4, 1 1/2, 2	–
On/off valves MS-EE-B							Datasheets ➔ Internet: ms4-ee-b; ms6-ee-b	
	Electrically actuated on/off valve in polymer housing for pressurising and exhausting pneumatic systems.	4	–	–	1/4	–	–	–
		6	–	–	1/2	–	–	–
Soft-start valves MS-DL							Datasheets ➔ Internet: ms4-dl; ms6-dl; ms12-dl	
	Pneumatically actuated soft-start valve for slowly pressurising and exhausting pneumatic systems.	4	–	–	1/8, 1/4	–	1/8, 1/4, 3/8	1/8, 1/4, 3/8
		6	–	–	1/4, 3/8, 1/2	–	1/4, 3/8, 1/2, 3/4	1/4, 3/8, 1/2, 3/4
		12	–	–	–	–	1, 1 1/4, 1 1/2, 2	–
Soft-start valves MS-DE							Datasheets ➔ Internet: ms4-de; ms6-de; ms12-de	
	Electrically actuated soft-start valve for slow pressurisation and exhausting of pneumatic installations.	4	–	–	1/8, 1/4	–	1/8, 1/4, 3/8	1/8, 1/4, 3/8
		6	–	–	1/4, 3/8, 1/2	–	1/4, 3/8, 1/2, 3/4	1/4, 3/8, 1/2, 3/4
		12	–	–	–	–	1, 1 1/4, 1 1/2, 2	–
On/off valves MS-EDE-B							Datasheets ➔ Internet: ms4-ede-b; ms6-ede-b	
	Electrically actuated soft-start valve in polymer housing for slowly pressurising and exhausting pneumatic systems.	4	–	–	1/4	–	–	–
		6	–	–	1/2	–	–	–
Soft-start/quick exhaust valves MS-SV							Datasheets ➔ Internet: ms6-sv; ms9-sv	
	For building up pressure gradually and reducing pressure quickly and safely in pneumatic piping systems. Up to category 1, PL c.	6	–	–	1/2	–	1/4, 3/8, 1/2, 3/4	1/4, 3/8, 1/2, 3/4
		9	–	–	3/4, 1	3/4, 1	1/2, 3/4, 1, 1 1/4, 1 1/2	1/2, 3/4, 1, 1 1/4, 1 1/2
	Up to category 3, PL d. Up to category 4, PL e in the case of optional extension.	6	–	–	1/2	–	1/4, 3/8, 1/2, 3/4	1/4, 3/8, 1/2, 3/4
	Up to category 4, PL e.	6	–	–	1/2	–	1/4, 3/8, 1/2, 3/4	–

Key features

Product range for service unit components of the MS series								
Type	**Description**	**Size**	**Pneumatic connection**					
			Push-in connector	**Female thread**			**Connecting plate with thread**	
				M	**G**	**NPT**	**G**	**NPT**
Individual devices								
Membrane air dryers MS-LDM1							Datasheets ➔ Internet: ms4-ldm; ms6-ldm	
	Wear-free membrane dryer with internal air consumption	4	–	–	1/8, 1/4	–	1/8, 1/4, 3/8	1/8, 1/4, 3/8
		6	–	–	1/4, 3/8, 1/2	–	1/4, 3/8, 1/2, 3/4	1/4, 3/8, 1/2, 3/4
Branching modules MS-FRM							Datasheets ➔ Internet: ms4-frm; ms6-frm; ms9-frm; ms12-frm	
	Compressed air distributors with 4 connections	4	–	–	1/8, 1/4	–	1/8, 1/4, 3/8	–
		6	–	–	1/4, 3/8, 1/2	–	1/4, 3/8, 1/2, 3/4	–
		9	–	–	3/4, 1	3/4, 1	1/2, 3/4, 1, 1 1/4, 1 1/2	1/2, 3/4, 1, 1 1/4, 1 1/2
		12	–	–	–	–	1, 1 1/4, 1 1/2, 2	–
Distributor blocks MS-FRM-FRZ							Datasheets ➔ Internet: ms4-frm-frz; ms6-frm-frz	
	Compressed air distributors with 4 connections and half the grid width	4	–	–	–	–	–	–
		6	–	–	–	–	–	–
Flow sensors SFAM							Datasheets ➔ Internet: sfam	
	For absolute flow rate information and cumulative air consumption measurement	6	–	–	–	–	1/2	1/2
		9	–	–	–	–	1, 1 1/2	1, 1 1/2

Peripherals overview

Water separator MS6-LWS

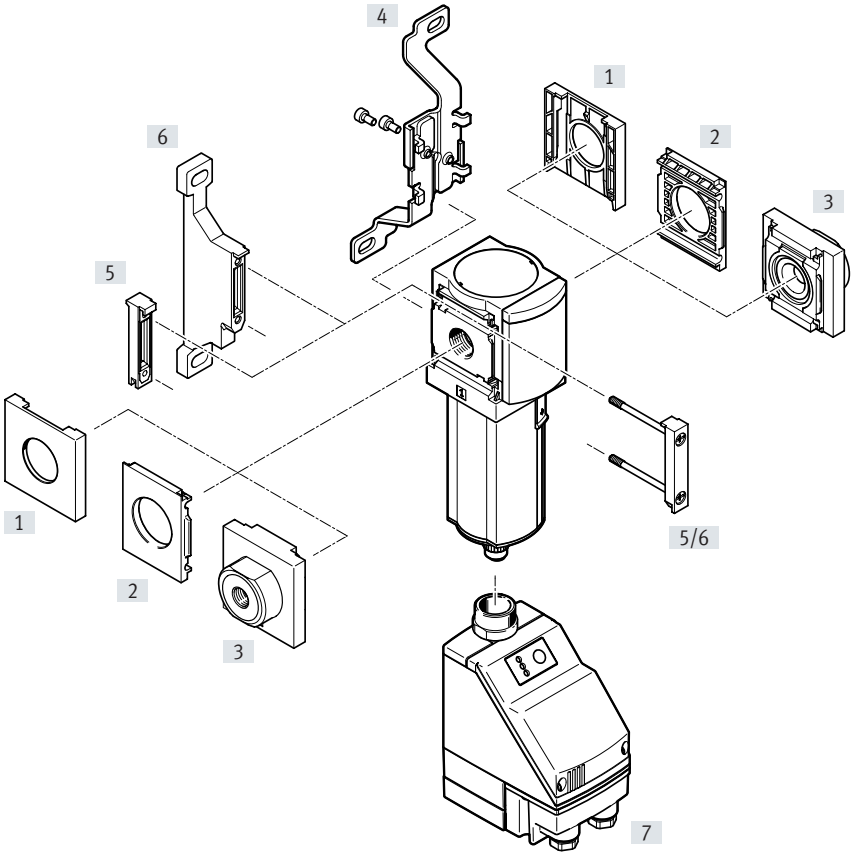

Note

Additional accessories:

- Module connector for combination with size MS4/MS6 or size MS9
  ➔ Internet: amv, rmv, armv
- Adapter for mounting on profiles
  ➔ Internet: ipm-80, ipm-40-80, ipm-80-80

Mounting attachments and accessories

		Individual device		Combination		➔ Page/ Internet
		Without connecting plate	With connecting plate	Without connecting plate	With connecting plate	
[1]	Cover cap MS6-END	■	–	■	–	ms6-end
[2]	Mounting plate MS6-AEND	■[1)]	–	■[1)]	–	ms6-aend
[3]	Connecting plate SET MS6-AG...	–	■[1)]	–	■[1)]	ms6-ag
	Connecting plate SET MS6-AQ...	–	■[1)]	–	■[1)]	ms6-aq
[4]	Mounting bracket MS6-WB	■	■	–	–	ms6-wb
[5]	Module connector MS6-MV	–	■	■	■	ms6-mv
[6]	Mounting bracket MS6-WP	■	■	■	■	ms6-wp
	Mounting bracket (not shown) MS6-WPB/WPE/WPM	■	■	■	■	ms6-wp
[7]	Fully automatic, electrically actuated condensate drain E2/E3/E4	■	■	■	■	14

1) Module connector MS6-MV [5] or mounting bracket MS6-WP/WPB/WPE/WPM [6] is required for mounting.

Type codes

001	Series	
MS	MS series	

002	Size	
6	Grid dimension 62 mm	

003	Thread type	
	G thread	

004	Function	
LWS	Water separator	

005	Pneumatic connection	
1/4	Female thread G1/4	
3/8	Female thread G3/8	
1/2	Female thread G1/2	
AGB	Sub-base G1/4	
AGC	Sub-base G3/8	
AGD	Sub-base G1/2	
AGE	Sub-base G3/4	
AQN	Sub-base NPT1/4	
AQP	Sub-base NPT3/8	
AQR	Sub-base NPT1/2	
AQS	Sub-base NPT3/4	

006	Bowl type	
U	Aluminium	

007	Condensate drain	
V	Automatic	
E2	External fully automatic condensate drain, electric, 110 V AC, terminals	
E3	External fully automatic condensate drain, electric, 230 V AC, terminals	
E4	External fully automatic condensate drain, electric, 24 V DC, terminals	

008	Type of mounting	
	Without mounting bracket	
WP	Mounting bracket basic design	
WPM	Mounting bracket for hooking in service unit components	
WB	Mounting centrally at rear (wall mounting top and bottom), connecting plates not required	

009	EU certification	
	None	
EX4	II 2GD	

010	UL certification	
	None	
UL1	cULus ordinary location for Canada and USA	

011	Flow direction	
	Flow direction from left to right	
Z	Flow direction from right to left	

Datasheet

Fully automatic
condensate drain

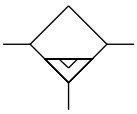

Flow rate
2400 ... 3800 l/min

Temperature range
+1 ... +60 °C

Operating pressure
0.8 ... 16 bar

www.festo.com

The maintenance-free water separator removes condensate from the compressed air.

- Constantly high condensate separation (99%) up to the maximum flow rate
- Metal bowl
- Available with fully automatic or fully automatic, electrically actuated condensate drain
- Optional device variant EX4 for use in potentially explosive areas in zones 1, 2, 21 and 22

General technical data	
Pneumatic connection 1, 2	
Female thread	G1/4, G3/8 or G1/2
Connecting plate [AG...]	G1/4, G3/8, G1/2 or G3/4
Connecting plate [AQ...]	NPT1/4, NPT3/8, NPT1/2 or NPT3/4
Design	Centrifugal separator
Type of mounting	With accessories
	In-line installation
Mounting position	Vertical ±5°
Air purity class at the output	Compressed air to ISO 8573-1:2010 [7:7:4] (with variant E2, E3 or E4: [–:7:4])
Bowl guard	Integrated as metal bowl
Condensate drain	Fully automatic
	Fully automatic, electrically actuated
Degree of condensate separation [%]	99
Max. condensate volume [ml]	38

Note: This product conforms to ISO 1179-1 and ISO 228-1.

Standard nominal flow rate qnN[1]			
Pneumatic connection	G1/4, NPT1/4	G3/8, NPT3/8	G1/2, NPT1/2
qnN [l/min]	2400	3500	3800

1) Measured at p1 = 6 bar and Δp = 1 bar

Datasheet

Operating and environmental conditions			
Condensate drain		Fully automatic V	Fully automatic, electrically actuated E2/E3/E4
Operating pressure	[bar]	2 ... 12 (2 ... 10)[1]	0.8 ... 16 (0.8 ... 10)[1]
Operating medium		Compressed air to ISO 8573-1:2010 [7:–:–]	Compressed air to ISO 8573-1:2010 [–:–:–]
		Inert gases	
Ambient temperature	[°C]	+5 ... +60	+1 ... +60
Temperature of medium	[°C]	+5 ... +60	+1 ... +60
Storage temperature	[°C]	–10 ... +60	+1 ... +60
Corrosion resistance class CRC[2]		2	
Food-safe[3]		See supplementary material information	–
UL certification[3]		c UL us - Recognized (OL)	

1) Value in brackets applies to MS6-LWS with UL certification.
2) More information www.festo.com/x/topic/crc
3) More information: www.festo.com/catalogue/ms-lws → Support/Downloads.

ATEX	
EU certification	[EX4]
ATEX category for gas	II 2G
Type of (ignition) protection for gas	Ex h IIC T6 Gb X
ATEX category for dust	II 2D
Type of (ignition) protection for dust	Ex h IIIC T60°C Db X
Explosion ambient temperature	+5°C ≤ Ta ≤ +60°C
Explosion protection certification outside the EU	EPL Db (GB) EPL Gb (GB)
CE marking (see declaration of conformity)[1]	To EU Explosion Protection Directive (ATEX)
UKCA marking (see declaration of conformity)[1]	To UK regulations for explosions

1) More information: www.festo.com/catalogue/ms-lws → Support/Downloads.

Weight [g]	
Water separator	820
Water separator with fully automatic, electrically actuated condensate drain E2/E3/E4	1800

Materials

Sectional view

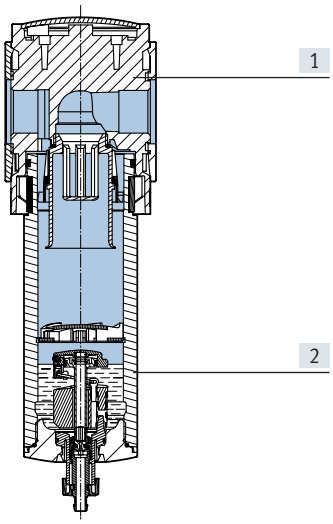

Water separator		
[1]	Housing	Die-cast aluminium
[2]	Bowl	Wrought aluminium alloy
	Inspection window	PA
–	Seals	NBR
Note on materials		RoHS-compliant
LABS (PWIS) conformity		VDMA24364-B1/B2-L

Datasheet

Standard flow rate qn as a function of differential pressure p1-2

Pneumatic connection G1/4, NPT1/4

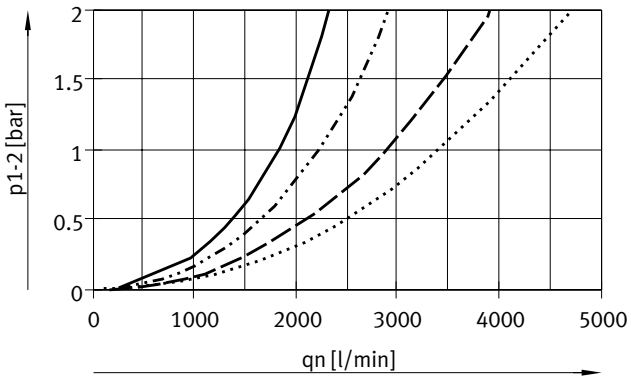

Pneumatic connection G3/8, NPT3/8

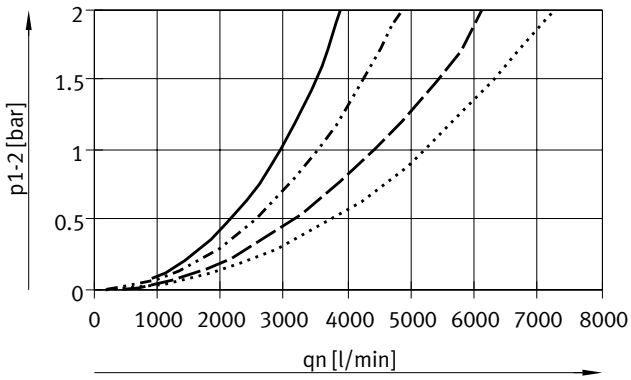

Pneumatic connection G1/2, NPT1/2

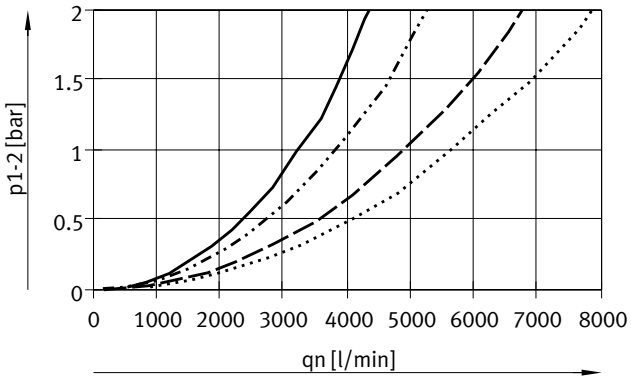

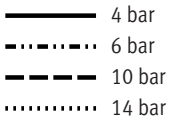

Datasheet

Dimensions – Basic version Download CAD data ➔ www.festo.com

[V] Fully automatic condensate drain

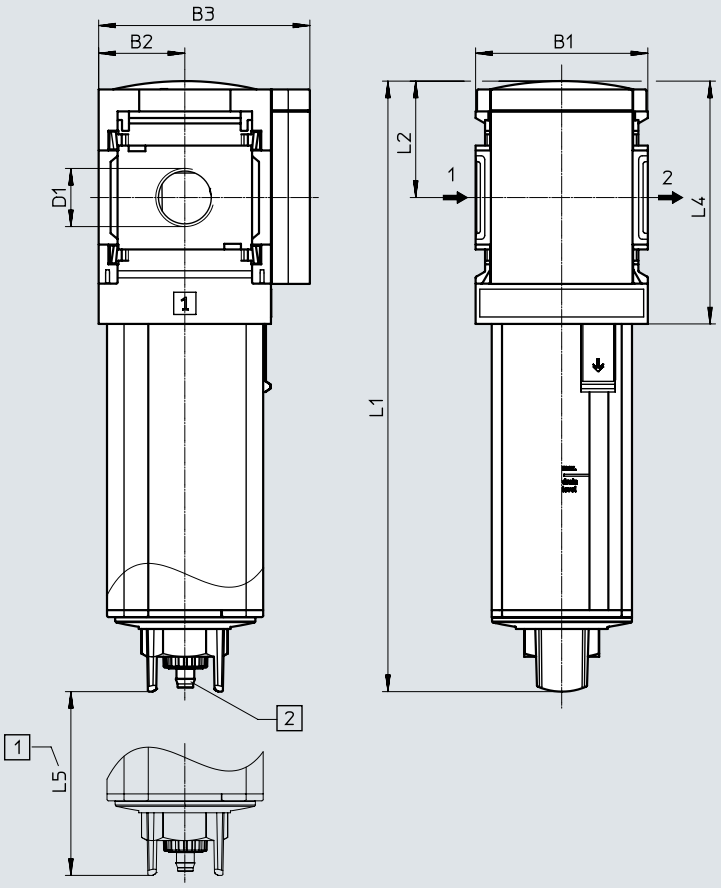

[1] Installation dimension
[2] Barbed connector for plastic tubing PUN(-H)-8x1.25

➔ Flow direction

Type	B1	B2	B3	D1	L1	L2	L4	L5
MS6-LWS-1/4-...-V	62	31	76	G1/4	220	42	88	64
MS6-LWS-3/8-...-V				G3/8				
MS6-LWS-1/2-...-V				G1/2				

Note: This product conforms to ISO 1179-1 and ISO 228-1.

Datasheet

Dimensions – Condensate drain

Download CAD data ➔ www.festo.com

[E2]/[E3]/[E4] Fully automatic, electrically actuated

Datasheets ➔ Internet: pwea

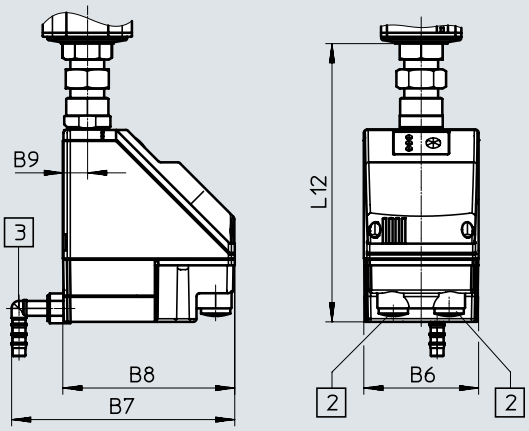

Condensate drain PWEA:

[2] Electrical connection: screw terminal PG9

[3] Connection can be rotated 360° for plastic tubing PUN-H-12x2

Type	B6	B7	B8	B9	L12
MS6-LWS-...-E2/E3/E4	72	140	108	15	174.5

Ordering data

Integrated as metal bowl

Size	Condensate drain	Connection	Part no.	Type
MS6	Fully automatic	G1/4	**564868**	**MS6-LWS-1/4-U-V**
		G3/8	**564869**	**MS6-LWS-3/8-U-V**
		G1/2	**564870**	**MS6-LWS-1/2-U-V**

Ordering data – Modular product system

Ordering table					
Grid dimension [mm]		62	Conditions	Code	Enter code
Module no.		**564858**			
Series		Standard		**MS**	MS
Size		6		**6**	6
Function		Water separator		**-LWS**	-LWS
Pneumatic connection		Female thread G1/4	[1]	**-1/4**	
		Female thread G3/8	[1]	**-3/8**	
		Female thread G1/2	[1]	**-1/2**	
		Connecting plate G1/4		**-AGB**	
		Connecting plate G3/8		**-AGC**	
		Connecting plate G1/2		**-AGD**	
		Connecting plate G3/4		**-AGE**	
		Connecting plate NPT1/4	[1]	**-AQN**	
		Connecting plate NPT3/8	[1]	**-AQP**	
		Connecting plate NPT1/2	[1]	**-AQR**	
		Connecting plate NPT3/4	[1]	**-AQS**	
Bowl guard		Metal bowl		**-U**	-U
Condensate drain		Fully automatic (P1 max. 12 bar)		**-V**	
	External, fully automatic, electric	115 V AC, connection terminals (P1 max. 16 bar)	[1]	**-E2**	
		230 V AC, connection terminals (P1 max. 16 bar)	[1]	**-E3**	
		24 V DC, connection terminals (P1 max. 16 bar)	[1]	**-E4**	
Type of mounting		Without mounting bracket			
		Mounting bracket standard design	[2]	**-WP**	
		Mounting bracket for hooking in service unit components	[1] [2]	**-WPM**	
		Mounting bracket centrally at rear (wall mounting top and bottom), connecting plates not required		**-WB**	
EU certification		None			
		II 2GD to EU Explosion Protection Directive (ATEX)		**-EX4**	
UL certification		None			
		cULus, ordinary location for Canada and USA		**-UL1**	
Flow direction		Flow direction from left to right			
		Flow direction from right to left		**-Z**	

[1] 1/4, 3/8, 1/2, AQN, AQP, AQR, AQS, E2, E3, E4, WPM
Not with EU EX4 certification.

[2] WP, WPM Only with connecting plate AGB, AGC, AGD, AGE, AQN, AQP, AQR or AQS.

Peripherals overview

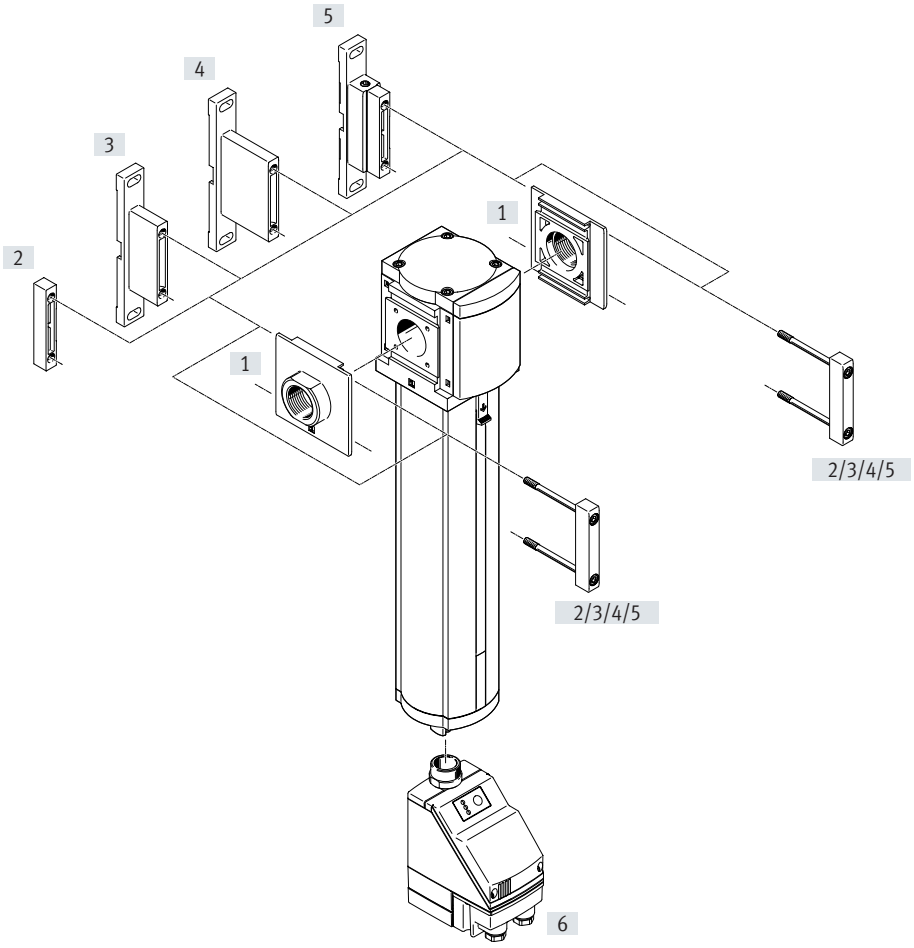

Note

Additional accessories:

- Module connector for combination with size MS6, MS9 or MS12
  ➔ Internet: rmv, armv

Mounting attachments and accessories

		Individual device			Combination	➔ Page/ Internet
		With female thread	With connecting plate		Module without connecting thread, without connecting plate	
			Without EU certification	With EU certification		
[1]	Connecting plate SET MS9-AG...	–	■	■	■	ms9-ag
	Connecting plate SET MS9-AQ...	–	■	–	■	ms9-aq
[2]	Module connector MS9-MV	–	–	–	■	ms9-mv
[3]	Mounting bracket MS9-WP	■	■	■	■	ms9-wp
[4]	Mounting bracket MS9-WPB	■	■	■	■	ms9-wp
[5]	Mounting bracket MS9-WPM	■	■	–	■	ms9-wp
[6]	Electrically actuated condensate drain fully automatic E2, E3, E4	■	■	–	■	22

Type codes

001	Series	
MS	MS series	

002	Size	
9	Grid dimension 90 mm	

003	Function	
LWS	Water separator	

004	Pneumatic connection	
3/4	Female thread G3/4	
1	Female thread G1	
AGD	Sub-base G1/2	
AGE	Sub-base G3/4	
AGF	Sub-base G1	
AGG	Sub-base G11/4	
AGH	Sub-base G11/2	
N3/4	NPT3/4	
N1	NPT1	
AQR	Sub-base NPT1/2	
AQS	Sub-base NPT3/4	
AQT	Sub-base NPT1	
AQU	Sub-base NPT11/4	
AQV	Sub-base NPT11/2	
G	Module without connecting thread, without sub-base	

005	Bowl type	
U	Aluminium	

006	Condensate drain	
V	Automatic	
E2	External fully automatic condensate drain, electric, 110 V AC, terminals	
E3	External fully automatic condensate drain, electric, 230 V AC, terminals	
E4	External fully automatic condensate drain, electric, 24 V DC, terminals	

007	Type of mounting	
	Without mounting bracket	
WP	Mounting bracket basic design	
WPM	Mounting bracket for hooking in service unit components	
WPB	Mounting bracket for large wall gap	

008	EU certification	
	None	
EX4	II 2GD	

009	UL certification	
	None	
UL1	cULus ordinary location for Canada and USA	

010	Flow direction	
	Flow direction from left to right	
Z	Flow direction from right to left	

Datasheet

Fully automatic
condensate drain

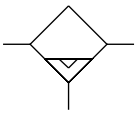

Flow rate
12000 ... 15000 l/min

Temperature range
+1 ... +60 °C

Operating pressure
0.8 ... 16 bar

The water separator removes condensate from the compressed air.

- Constantly high condensate separation (99%) up to the maximum flow rate
- Metal bowl
- Available with fully automatic or fully automatic, electrically actuated condensate drain
- Optional device variant EX4 for use in potentially explosive areas in zones 1, 2, 21 and 22

General technical data	
Size	MS9
Pneumatic connection 1, 2	
Female thread	G3/4, G1, NPT3/4 or NPT1
Connecting plate [AG...]	G1/2, G3/4, G1, G1 1/4 or G1 1/2
Connecting plate [AQ...]	NPT1/2, NPT3/4, NPT1, NPT1 1/4 or NPT1 1/2
Module without connecting thread/connecting plate [G]	–
Design	Centrifugal separator
Type of mounting	With accessories
	In-line installation
Mounting position	Vertical ±5°
Air purity class at the output	Compressed air to ISO 8573-1:2010 [–:7:4]
Bowl guard	Integrated as metal bowl
Condensate drain	Fully automatic
	Fully automatic, electrically actuated
Degree of condensate separation [%]	99
Max. condensate volume [ml]	220

Note: This product conforms to ISO 1179-1 and ISO 228-1.

Standard nominal flow rate qnN[1] [l/min]			
Pneumatic connection	G3/4, NPT3/4	G1, NPT1	Module without connecting thread, without connecting plate
qnN	12000 ±15%	15000 ±15%	15000 ±15%

1) Measured at p1 = 6 bar and Δp = 1 bar

Datasheet

Operating and environmental conditions			
Condensate drain		Fully automatic V	Fully automatic, electrically actuated E2/E3/E4
Operating pressure	[bar]	2 ... 12	0.8 ... 16
Operating medium		Compressed air to ISO 8573-1:2010 [–:–:–]	
Ambient temperature	[°C]	+5 ... +60	+1 ... +60
Temperature of medium	[°C]	+5 ... +60	+1 ... +60
Storage temperature	[°C]	+5 ... +60	+1 ... +60
Corrosion resistance class CRC[1)]		2	
UL certification[2)]		c UL us - Recognized (OL)	

1) More information www.festo.com/x/topic/crc
2) More information: www.festo.com/catalogue/ms-lws → Support/Downloads

ATEX	
EU certification	[EX4]
ATEX category for gas	II 2G
Type of (ignition) protection for gas	Ex h IIC T6 Gb X
ATEX category for dust	II 2D
Type of (ignition) protection for dust	Ex h IIIC T60°C Db X
Explosion ambient temperature	+5°C ≤ Ta ≤ +60°C
Explosion protection certification outside the EU	EPL Db (GB) EPL Gb (GB)
CE marking (see declaration of conformity)[1)]	To EU Explosion Protection Directive (ATEX)
UKCA marking (see declaration of conformity)[1)]	To UK regulations for explosions

2) More information: www.festo.com/catalogue/ms-lws → Support/Downloads

Weight [g]	
Water separator	2000
Water separator with fully automatic, electrically actuated condensate drain E2/E3/E4	2400

Materials

Sectional view

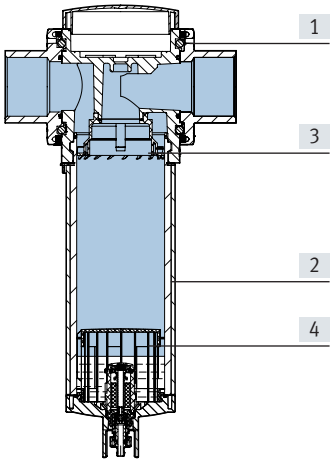

Water separator		
[1]	Housing	Die-cast aluminium
[2]	Bowl	Wrought aluminium alloy
	Inspection window	PA
[3]	Spin disc	POM
[4]	Separating disc	POM
–	Covering	Reinforced PA
–	Connecting plate, module connector, mounting bracket	Die-cast aluminium
–	Seals	NBR
Note on materials		RoHS-compliant
LABS (PWIS) conformity		VDMA24364-B1/B2-L

Datasheet

Standard flow rate qn as a function of differential pressure Δp1–2

Pneumatic connection G3/4, NPT3/4

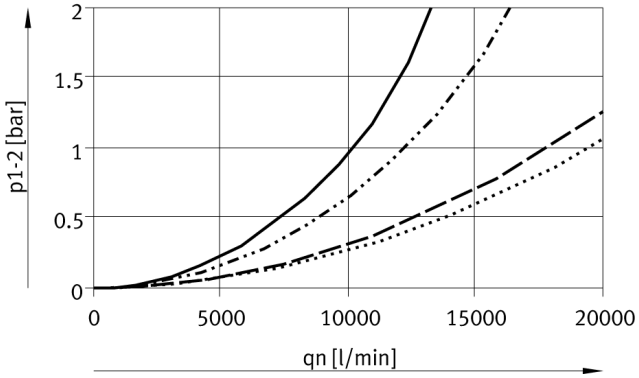

Pneumatic connection G1, NPT1

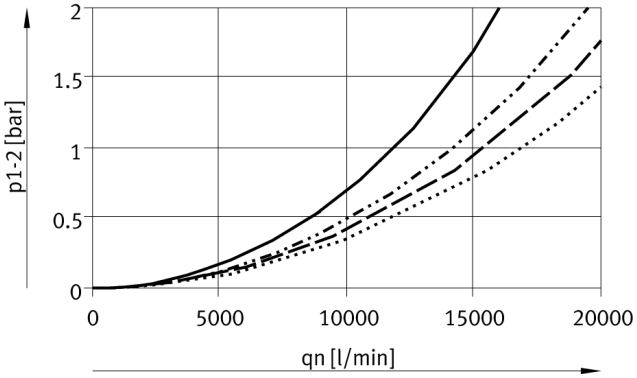

4 bar
6 bar
10 bar
12 bar

Dimensions – Basic version

Download CAD data ➔ www.festo.com

Module without connecting thread, without connecting plate G, [V] Condensate drain, fully automatic

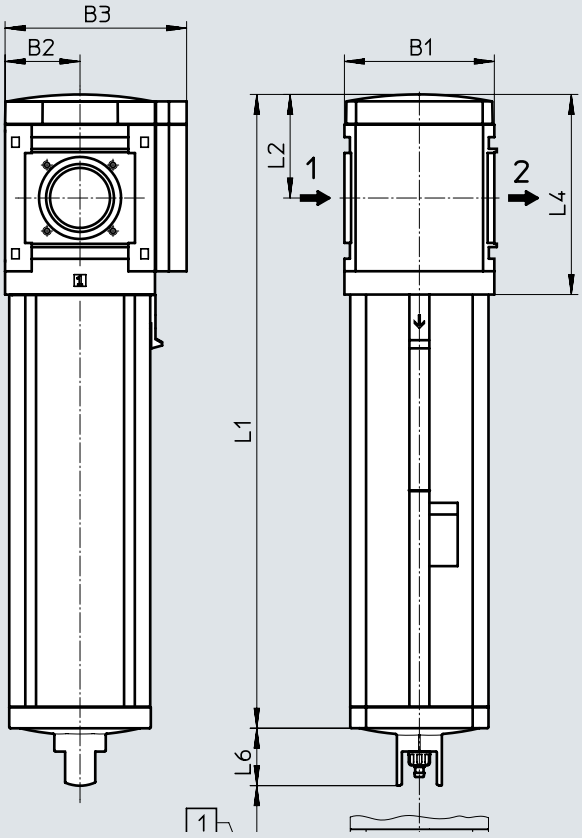

[1] Installation dimension

➔ Flow direction

Type	B1	B2	B3	L1	L2	L4	L5	L6
MS9-LWS-G	90	45	109	310.5	62	120	50	34.5

Datasheet

Dimensions – Connecting thread/connecting plate

Download CAD data ➔ www.festo.com

With female thread

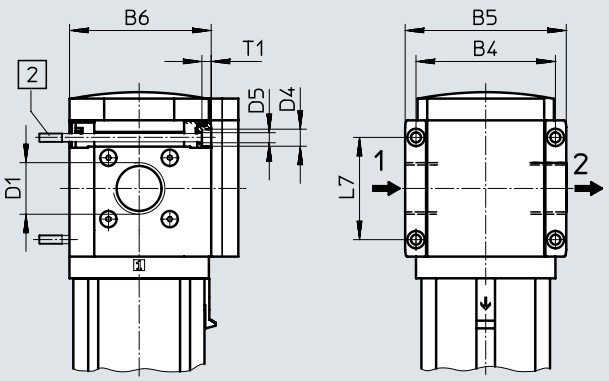

With connecting plate AG.../AQ...

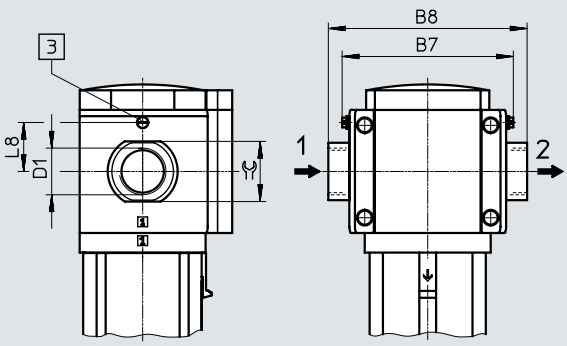

[2] Retaining screw M6xmin. 90 to DIN 912 (not included in the scope of delivery) for wall mounting without mounting bracket

[3] Earthing screw M4x8 (only with MS9-...-EX4)

➔ Flow direction

Type	B4	B5	B6	B7		B8	D1	D4	D5	L7	L8	T1	⌀
					EX4						EX4		
MS9-LWS-3/4	90	104	91.5	–	–	–	G3/4	11	6.5	66	–	6	–
MS9-LWS-1							G1						
MS9-LWS-AGD	–	–	–	112	122	132	G1/2	–	–	–	35	–	30
MS9-LWS-AGE						132	G3/4						36
MS9-LWS-AGF						142	G1						41
MS9-LWS-AGG						162	G1 1/4						50
MS9-LWS-AGH						176	G1 1/2						55
MS9-LWS-N3/4	90	104	91.5	–	–	–	NPT3/4-14	11	6.5	66	–	6	–
MS9-LWS-N1							NPT1-11 1/2						
MS9-LWS-AQR	–	–	–	112	122	132	NPT1/2-14	–	–	–	35	–	30
MS9-LWS-AQS						132	NPT3/4-14						36
MS9-LWS-AQT						142	NPT1-11 1/2						41
MS9-LWS-AQU						162	NPT1 1/4-11 1/2						50
MS9-LWS-AQV						176	NPT1 1/2-11 1/2						55

Note: This product conforms to ISO 1179-1 and ISO 228-1.

Datasheet

Dimensions – Condensate drain Download CAD data ➔ www.festo.com

[V] Fully automatic

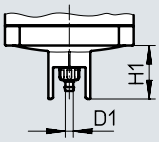

Barbed connector for plastic tubing
PUN(-H)-8x1.25

[E2]/[E3]/[E4] Fully automatic, electrically actuated Datasheets ➔ Internet: pwea

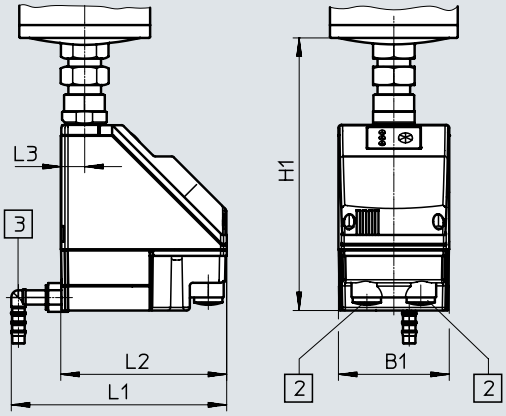

Condensate drain PWEA:
[2] Electrical connection: screw terminal PG9
[3] Connection can be rotated 360° for plastic tubing PUN-H-12x2

Type	B1	D1	H1	L1	L2	L3
MS9-LWS-...-V	–	5.6	34.5	–	–	–
MS9-LWS-...-E2/E3/E4	72	–	178	140	108	15

Ordering data

Size	Condensate drain	Connection	Part no.	Type
MS9	Fully automatic	–	**571468**	**MS9-LWS-G-U-V**

Ordering data – Modular product system

Ordering table					
Grid dimension [mm]	90	Conditions	Code		Enter code
Module no.	**567857**				
Series	Standard		**MS**		MS
Size	9		**9**		9
Function	Water separator		**-LWS**		-LWS
Pneumatic connection	Female thread G3/4	[1]	**-3/4**		
	Female thread G1	[1]	**-1**		
	Connecting plate G1/2		**-AGD**		
	Connecting plate G3/4		**-AGE**		
	Connecting plate G1		**-AGF**		
	Connecting plate G1 1/4		**-AGG**		
	Connecting plate G1 1/2		**-AGH**		
	Female thread NPT3/4	[1]	**-N3/4**		
	Female thread NPT1	[1]	**-N1**		
	Connecting plate NPT1/2	[1]	**-AQR**		
	Connecting plate NPT3/4	[1]	**-AQS**		
	Connecting plate NPT1	[1]	**-AQT**		
	Connecting plate NPT1 1/4	[1]	**-AQU**		
	Connecting plate NPT1 1/2	[1]	**-AQV**		
	Module without connecting thread, without connecting plate	[1]	**-G**		
Bowl	Metal bowl		**-U**		-U
Condensate drain	Fully automatic (P1 max. 12 bar)		**-V**		
External, fully automatic, electric	115 V AC, connection terminals (P1 max. 16 bar)	[1]	**-E2**		
	230 V AC, connection terminals (P1 max. 16 bar)	[1]	**-E3**		
	24 V DC, connection terminals (P1 max. 16 bar)	[1]	**-E4**		
Type of mounting	Without mounting bracket				
	Mounting bracket standard design	[2]	**-WP**		
	Mounting bracket for hooking in service unit components	[1] [2]	**-WPM**		
	Mounting bracket for large wall gap	[2]	**-WPB**		
EU certification	None				
	II 2GD to EU Explosion Protection Directive (ATEX)		**-EX4**		
UL certification	None				
	cULus, ordinary location for Canada and USA		**-UL1**		
Flow direction	Flow direction from left to right				
	Flow direction from right to left		**-Z**		

1) 3/4, 1, N3/4, N1, AQR, AQS, AQT, AQU, AQV, G, E2, E3, E4, WPM
Not with EU EX4 certification

2) WP, WPM, WPB Not with pneumatic connection G

Peripherals overview

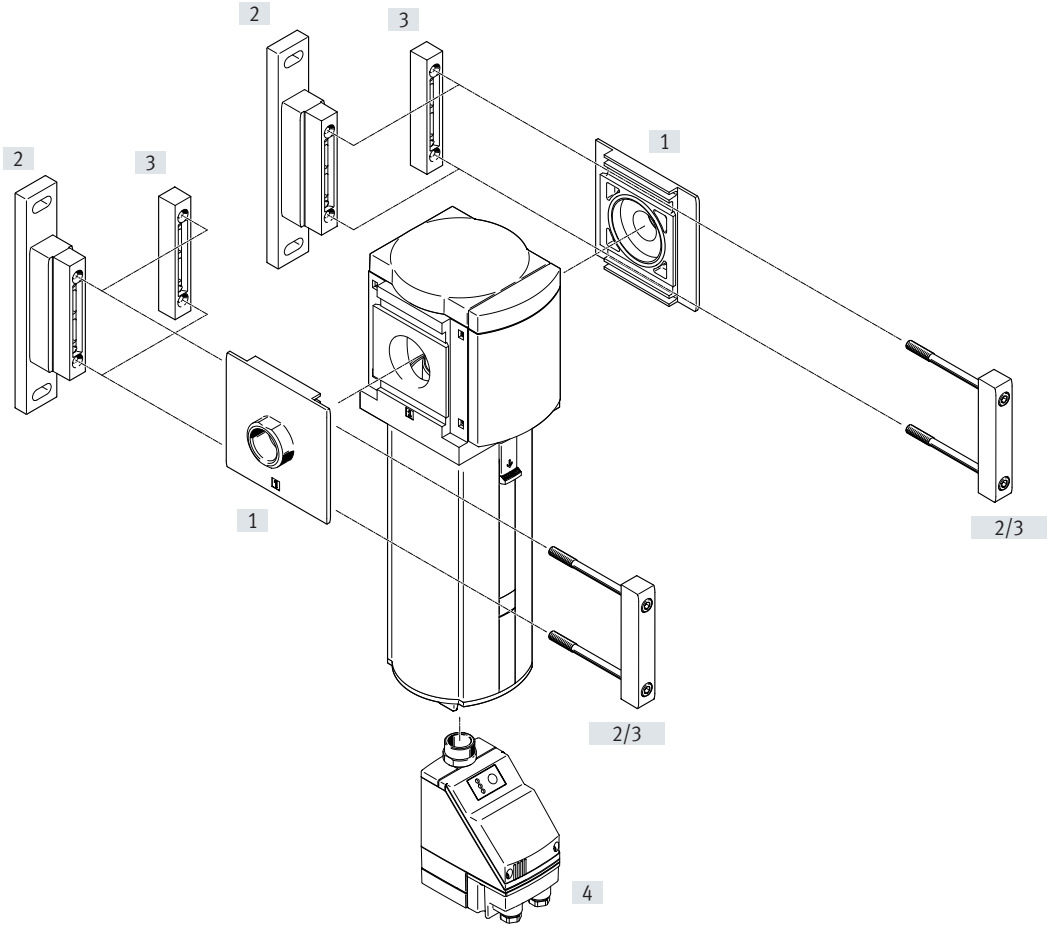

Note

Additional accessories:

- Module connector for combination with size MS9
  ➔ Internet: armv

Mounting attachments and accessories		➔ Page/Internet
[1]	Connecting plate SET MS12-AG...	ms12-ag
	Connecting plate SET MS12-AQ...	ms12-aq
[2]	Mounting bracket MS12-WP	ms12-wp
[3]	Module connector MS12-MV	ms12-mv
[4]	Fully automatic condensate drain, electrically actuated E2/E3/E4	29

Type codes

001	Series	
MS	MS series	

002	Size	
12	Grid dimension 124 mm	

003	Function	
LWS	Water separator	

004	Pneumatic connection	
AGF	Sub-base G1	
AGG	Sub-base G11/4	
AGH	Sub-base G11/2	
AGI	Sub-base G2	
AQT	Sub-base NPT1	
AQU	Sub-base NPT11/4	
AQV	Sub-base NPT11/2	
AQW	Sub-base NPT2	
G	Module without connecting thread, without sub-base	

005	Bowl type	
U	Aluminium	

006	Condensate drain	
V	Automatic	
E2	External fully automatic condensate drain, electric, 110 V AC, terminals	
E3	External fully automatic condensate drain, electric, 230 V AC, terminals	
E4	External fully automatic condensate drain, electric, 24 V DC, terminals	

007	Type of mounting	
	Without mounting bracket	
WP	Mounting bracket basic design	

008	Flow direction	
	Flow direction from left to right	
Z	Flow direction from right to left	

Datasheet

Fully automatic
condensate drain

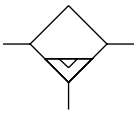

- Flow rate
  25000 l/min
- Temperature range
  +1 ... +60°C
- Operating pressure
  0.8 ... 16 bar

The water separator removes condensate from the compressed air.

- Constantly high condensate separation (99%) up to the maximum flow rate
- Metal bowl
- Available with fully automatic or fully automatic, electrically actuated condensate drain

General technical data		
Pneumatic connection 1, 2		
	Connecting plate AG...	G1, G1 1/4, G1 1/2 or G2
	Connecting plate AQ...	NPT1, NPT1 1/4, NPT1 1/2 or NPT2
	Module without connecting thread/connecting plate G	–
Design		Centrifugal separator
Type of mounting		With accessories
		In-line installation
Mounting position		Vertical ±5°
Air purity class at the output		Compressed air to ISO 8573-1:2010 [–:7:4]
Bowl guard		Integrated as metal bowl
Condensate drain		Fully automatic
		Fully automatic, electrically actuated
Degree of condensate separation	[%]	99
Max. condensate volume	[ml]	400

Note: This product conforms to ISO 1179-1 and ISO 228-1.

Flow rates		
Standard nominal flow rate q_{nN} 1)	[l/min]	25000 ±15%
Max. standard flow rate $q_{n\ max.}$	[l/min]	40000 ±15%

1) Measured at p1 = 6 bar and Δp = 0.5 bar

Datasheet

Operating and environmental conditions			
Condensate drain		Fully automatic V	Fully automatic, electrically actuated E2/E3/E4
Operating pressure	[bar]	2 ... 12	0.8 ... 16
Operating medium		Compressed air to ISO 8573-1:2010 [–:–:–]	
Ambient temperature	[°C]	+5 ... +60	+1 ... +60
Temperature of medium	[°C]	+5 ... +60	+1 ... +60
Storage temperature	[°C]	+5 ... +60	+1 ... +60
Corrosion resistance class CRC[1]		2	

1) More information www.festo.com/x/topic/crc

Weight [g]	
Water separator	6300
Water separator with fully automatic, electrically actuated condensate drain E2/E3/E4	7000
Accessories	
Connecting plate AG...	1300
Mounting bracket WP	700

Materials

Sectional view

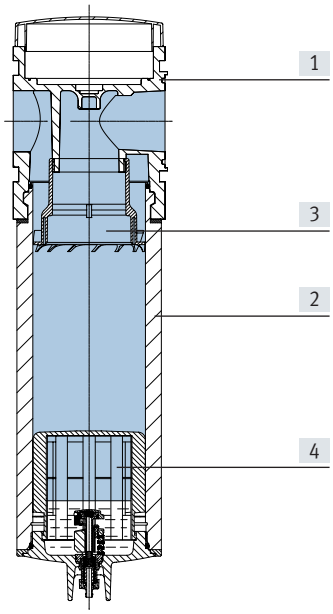

Water separator		
[1]	Housing	Die-cast aluminium
[2]	Bowl	Wrought aluminium alloy
	Inspection window	PA
[3]	Spin disc	POM
[4]	Separating disc	POM
–	Covering	Reinforced PA
–	Connecting plate, module connector, mounting bracket	Die-cast aluminium
–	Seals	NBR
Note on materials		RoHS-compliant
LABS (PWIS) conformity		VDMA24364-B1/B2-L

Datasheet

Standard flow rate qn as a function of differential pressure Δp1–2

Pneumatic connection G1 1/2, G2, NPT1 1/2, NPT2

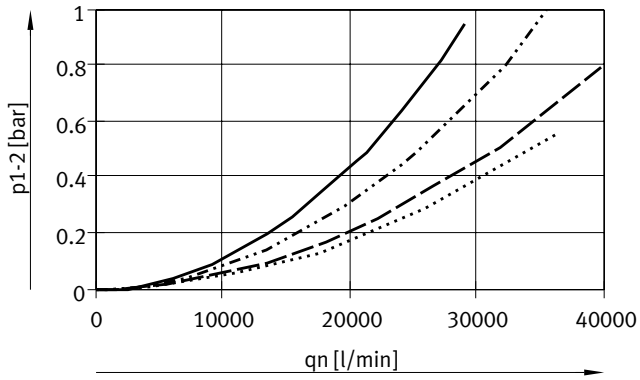

4 bar
6 bar
10 bar
12 bar

Dimensions – Basic version

Download CAD data ➔ www.festo.com

Module without connecting thread, without connecting plate G, [V] Condensate drain, fully automatic

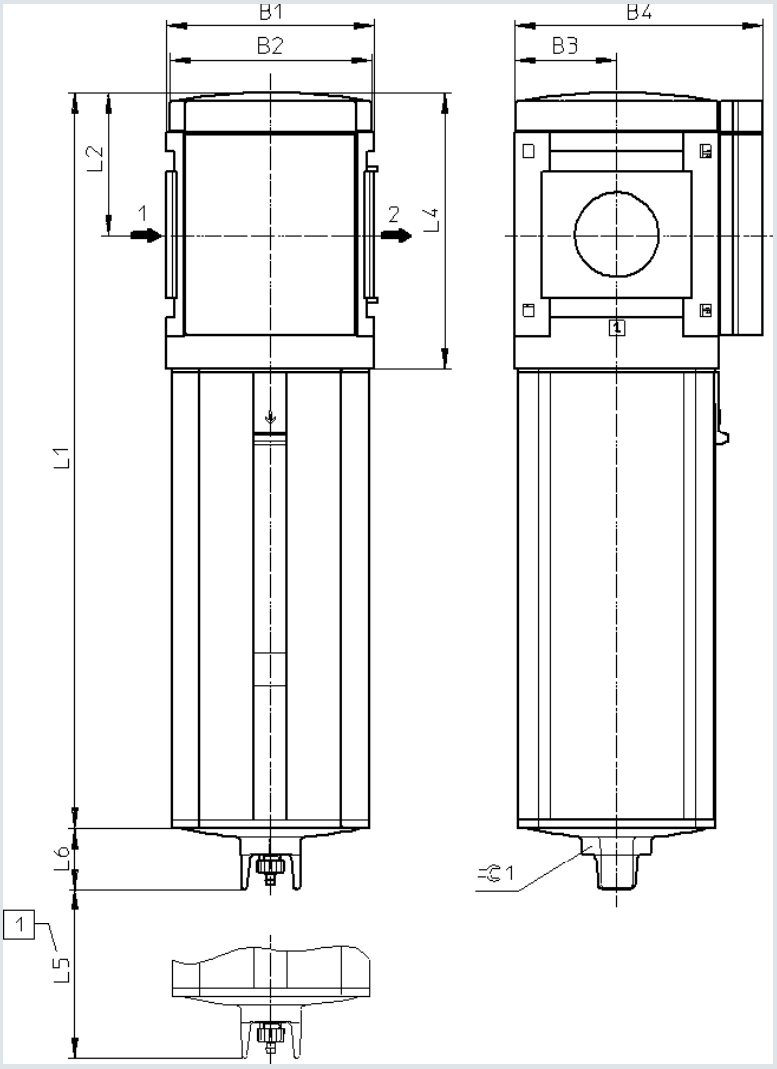

Note

Dimensions with

- Connecting plate ➔ ms12-ag
- Mounting bracket ➔ ms12-wp

[1] Installation dimension

➔ Flow direction

Type	B1	B2	B3	B4	L1	L2	L4	L5	L6	⌯ 1
MS12-LWS-G	124	122	61	148	441	85	165	60	36	36

Datasheet

Dimensions – Condensate drain Download CAD data ➔ www.festo.com

Fully automatic V

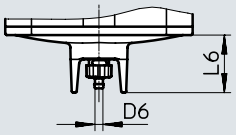

Barbed connector for plastic tubing
PUN(-H)-8x1.25

[E2]/[E3]/[E4] Fully automatic, electrically actuated Datasheets ➔ Internet: pwea

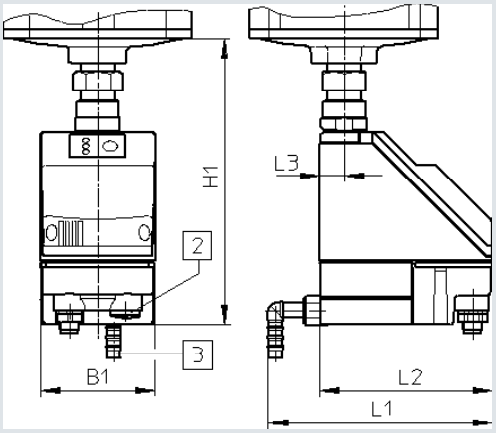

Condensate drain PWEA:
[2] Electrical connection: screw terminal PG9
[3] Connection can be rotated 360° for plastic tubing PUN-H-12x2

Type	B1	D6	H1	L1	L2	L3	L6
MS12-LWS-...-V	–	5.6	–	–	–	–	36
MS12-LWS-...-E2/E3/E4	72	–	179	140	108	15	–

Ordering data

Size	Condensate drain	Connection	Part no.	Type
MS12	Fully automatic	–	**8005550**	**MS12-LWS-G-U-V**

Ordering data – Modular product system

Ordering table					
Grid dimension [mm]	124	Conditions	Code		Enter code
Module no.	**569827**				
Series	Standard		**MS**		MS
Size	12		**12**		12
Function	Water separator		**-LWS**		-LWS
Pneumatic connection	Connecting plate G1		**-AGF**		
	Connecting plate G1 1/4		**-AGG**		
	Connecting plate G1 1/2		**-AGH**		
	Connecting plate G2		**-AGI**		
	Connecting plate NPT1		**-AQT**		
	Connecting plate NPT1 1/4		**-AQU**		
	Connecting plate NPT1 1/2		**-AQV**		
	Connecting plate NPT2		**-AQW**		
	Module without connecting thread, without connecting plate	[1]	**-G**		
Bowl	Metal bowl		**-U**		-U
Condensate drain	Fully automatic (P1 max. 12 bar)		**-V**		
External, fully automatic, electric	115 V AC, connection terminals (P1 max. 16 bar)		**-E2**		
	230 V AC, connection terminals (P1 max. 16 bar)		**-E3**		
	24 V DC, connection terminals (P1 max. 16 bar)		**-E4**		
Type of mounting	Without mounting bracket				
	Mounting bracket standard design	[2]	**-WP**		
Flow direction	Flow direction from left to right				
	Flow direction from right to left		**-Z**		

1) G Not with mounting type WP.
2) WP Only with connecting plate AGF, AGG, AGH, AGI, AQT, AQU, AQV or AQW.

Festo - Your Partner in Automation

1 Festo Inc.

5300 Explorer Drive
Mississauga, ON L4W 5G4
Canada

Festo Customer Interaction Center
Tel: 1 877 463 3786
Fax: 1 877 393 3786
Email: customer.service.ca@festo.com

2 Festo Pneumatic

Av. Ceylán 3,
Col. Tequesquináhuac
54020 Tlalnepantla,
Estado de México

Multinational Contact Center
01 800 337 8669

ventas.mexico@festo.com

3 Festo Corporation

1377 Motor Parkway
Suite 310
Islandia, NY 11749

4 Regional Service Center

7777 Columbia Road
Mason, OH 45040

Festo Customer Interaction Center
1 800 993 3786
1 800 963 3786
customer.service.us@festo.com

Connect with us

www.festo.com/socialmedia

www.festo.com

Subject to change