Cylinders with displacement encoder

FESTO

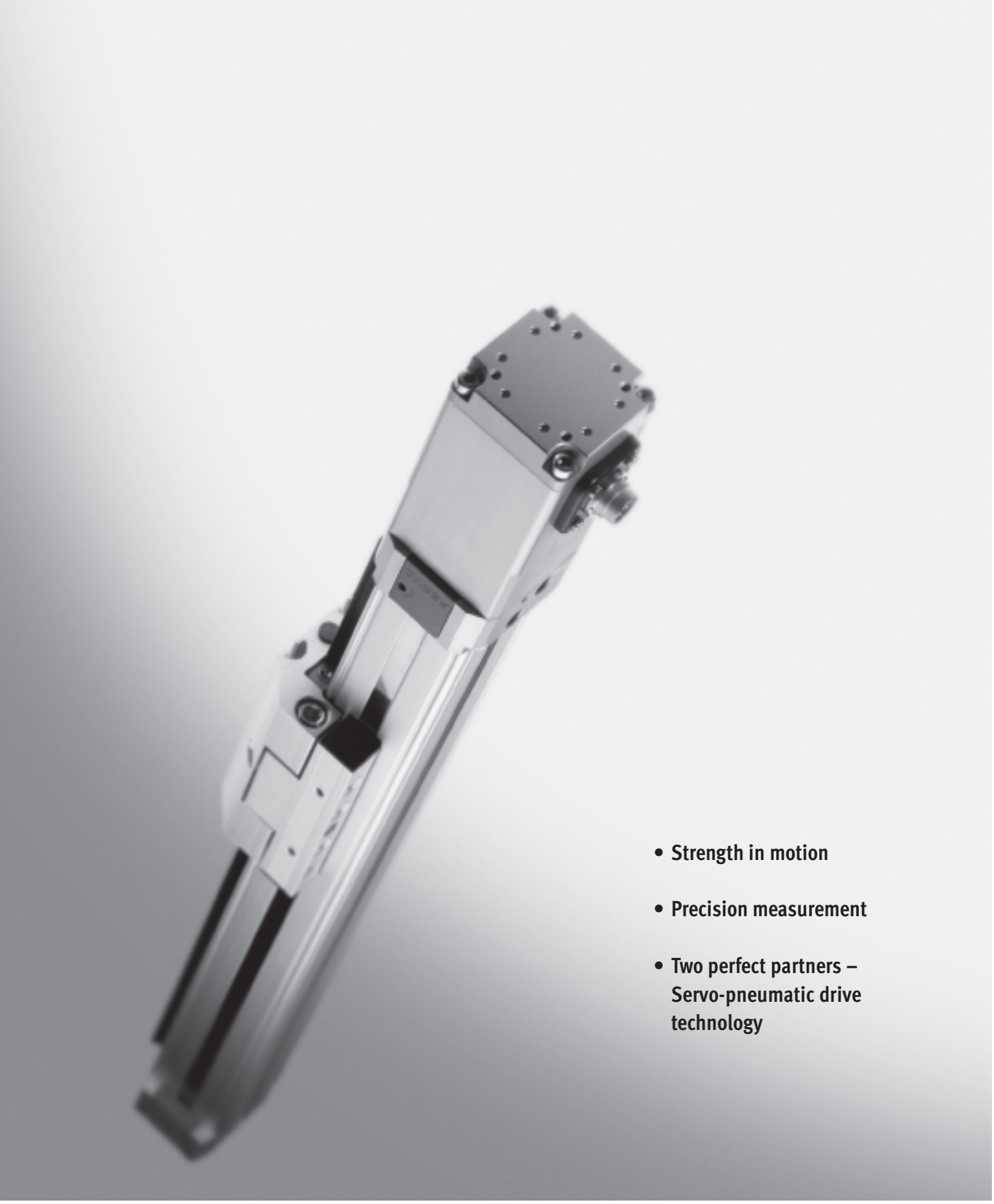

- Strength in motion
- Precision measurement
- Two perfect partners – Servo-pneumatic drive technology

Cylinders with displacement encoder

Product range overview

FESTO

Function	Type	Brief description
Drives	**Rodless**	
	DGCI 	• With guide • With contactless displacement measuring encoder • Based on linear drive DGC • Supply ports optionally on end face or front • Wide range of options for attaching drive units • System product for handling and assembly technology
	DGPI/DGPIL 	• With or without guide • With contactless displacement measuring encoder, integrated • Wide range of options for attaching drive units • System product for handling and assembly technology
	DGP/DGPL 	• With or without guide • With potentiometer or contactless displacement measuring encoder, attached • With clamping unit • Wide range of options for attaching drive units • System product for handling and assembly technology
	With piston rod	
	DNCI 	• With contactless displacement measuring encoder • Several piston rod variants • Standards-based cylinders to ISO 15552 ISO DIN VDMA
	DNCM 	• With attached potentiometer • Several piston rod variants • Standards-based cylinders to ISO 15552 ISO DIN VDMA
Semi-rotary drive	**Swivel module**	
	DSMI 	• Based on swivel module DSM • Rotary encoder integrated • Compact design • Wide choice of mounting options

Cylinders with displacement encoder

Product range overview

FESTO

Piston ∅ [mm]	Stroke/swivel angle [mm/°]	Suitable for positioning with SPC200	for end position controller SPC11	as a measuring cylinder	➔ Page
Rodless					
18, 25, 32, 40	100, 160, 225, 300, 360, 450, 500, 600, 750, 850, 1000, 1250, 1500, 1750, 2000	■	■	–	LEERER MERKER
25, 32, 40, 50, 63	225, 300, 360, 450, 500, 600, 750, 1000, 1250, 1500, 1750, 2000	■	■	–	LEERER MERKER
25, 32, 40, 50, 63	225, 300, 360, 450, 500, 600, 750, 1000, 1250, 1500, 1750, 2000	■	■	■	Drive: LEERER MERKER Displacement encoder: 5 / 1.2-2
With piston rod					
32, 40, 50, 63	10 … 2000	■	■	■	4
32, 50	100, 160, 200, 250, 320, 400, 500	■	■	■	22
Swivel module					
25, 40	270	■	■	■	LEERER MERKER

Standard cylinders DNCI, with integrated displacement encoder

Key features

Components for positioning and measuring using the standard cylinder DNCI

Positioning
with end-position controller SPC11 or axis controller SPC200

Proportional directional control valve MPYE-...
➔ 5 / 1.5-2

Soft Stop
➔ 5 / 1.4-2

Closed loop end-position controller SPC11-INC

Positioning technology
➔5 / 1.3-2

Axis interface SPC-AIF-INC

Axis controller SPC200

Measuring
with measuring transducer DADE

Measuring transducer DADE-...
➔ 5 / 1.1-56

PLC controller e.g. FEC-...
➔ Volume 4

Display and control unit e.g. FED-...
➔ Volume 4

Standard cylinders DNCI, with integrated displacement encoder

Type code

DNCI – ___ – ___ – ___ – ___ – ___ – ___ – ___ – ___ – ___

Type	
DNCI	Standard cylinders

Piston ∅ [mm]

Stroke [mm]

Cushioning	
P	Flexible cushioning rings/pads at both ends

Position sensing	
A	For proximity sensing

Type of piston rod	
S2	Through piston rod

Type of piston rod	
K8	Extended piston rod

Clamping cartridge	
KP	Clamping cartridge

Guide	
FENG	Guide unit with ball bearing guide

No measuring head	
MS	Drive without measuring head

Standard cylinders DNCI, with integrated displacement encoder

Peripherals overview

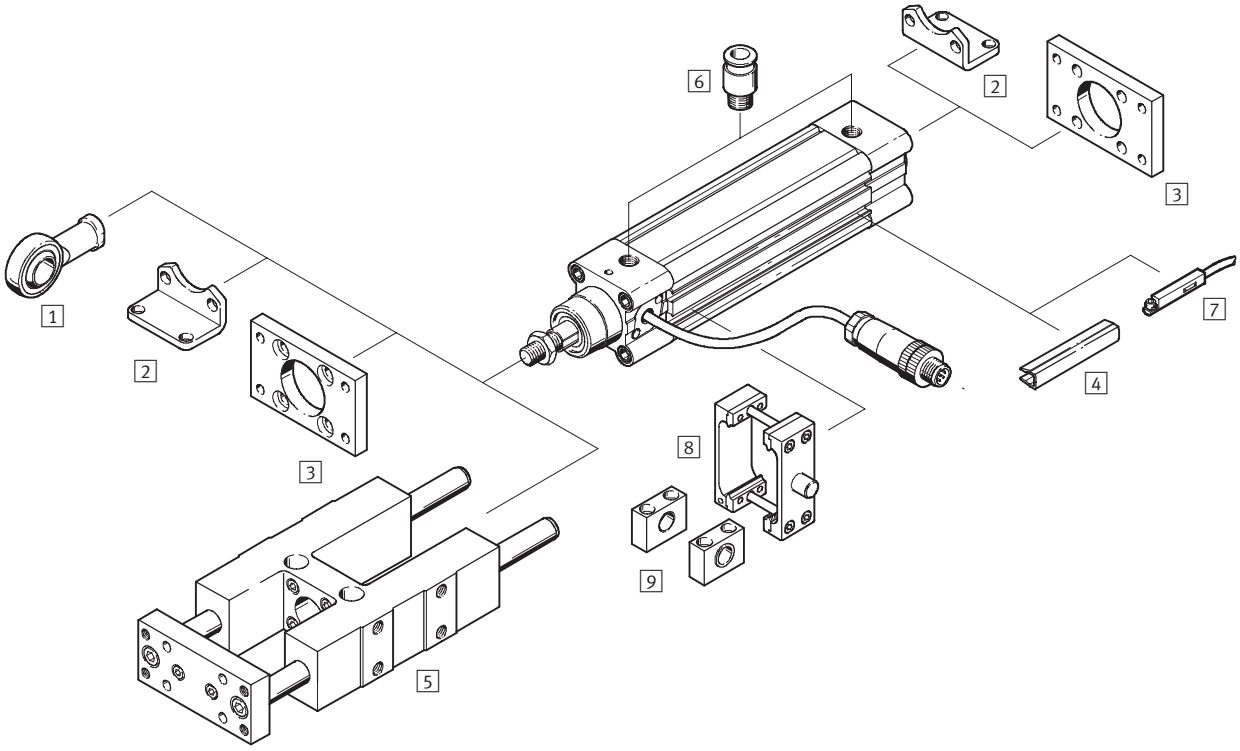

Note

If the drive DNCI is used without an end position controller SPC11 or an axis controller SPC200, e.g. as a measuring cylinder, then the standard accessories of the drive DNC can be used.

Standard cylinders DNCI, with integrated displacement encoder

Peripherals overview

Accessories			
	Type	Brief description	➔ Page
1	Rod eye SGS	With spherical bearing	19
2	Foot mounting HNC	For mounting the drive on the bearing and end cap	18
3	Flange mounting FNC	For mounting the drive on the bearing and end cap	19
4	Slot cover ABP-5-S	For protecting against ingress of dirt	21
5	Guide unit[1)] FENG-KF	For protecting against torsion at high torque loads	16
6	Push-in fitting QS	For connecting compressed air tubing with standard external diameters	21
7	Proximity sensor SME/SMT-8	For additional sensing of the piston position, can be ordered optionally, only in conjunction with the order code A in the drive's modular product section	Volume 1
8	Trunnion mounting kit ZNCM	For swivelling movements of the drive	20
9	Trunnion support LNZG	For securing the trunnion mounting kit ZNCM	20

1) Guide unit FENG-KF must be attached to the piston rod such that backlash is eliminated

Standard cylinders DNCI, with integrated displacement encoder

Technical data

Function

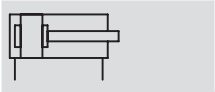

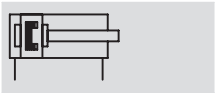

- Ø - Diameter
  32 ... 63 mm

- l - Stroke length
  10 ... 2,000 mm

General technical data					
Piston Ø		32	40	50	63
Constructional design		Piston			
		Piston rod			
		Profile barrel			
Mode of operation		Double-acting			
Cushioning		Flexible cushioning rings/pads at both ends			
Position sensing		Integrated displacement encoder			
		For proximity sensing[1)]			
Measuring principle (displacement encoder)		Digital			
Type of mounting		Foot mounting			
Stroke[2)4)]	[mm]	10 ... 2,000			
Torsion protection/Guide[3)]		Guide rod with yoke, with ball bearing guide			
Stroke	[mm]	100 ... 500			
Piston rod extension	[mm]	1 ... 500			
Pneumatic connection		G⅛	G¼	G¼	G⅜
Electrical connection		Cable with 8-pin plug, round type M12			
Cable length	[m]	1.5			

1) Not included in the scope of delivery, can be ordered as an option
2) Note stroke reduction in conjunction with SPC200
3) Guide unit FENG-KF must be ordered as an option and will be supplied attached, the max. stroke is reduced
4) Can only be used as a positioning drive without reservation in the range from 100 ... 500 mm

Forces [N] and impact energy [Nm]				
Piston Ø	32	40	50	63
Theoretical force at 6 bar advancing	483	754	1,178	1,870
Theoretical force at 6 bar retracting	415	633	990	1,682
Impact energy at end positions	0.1	0.2	0.2	0.5

Permissible impact velocity:

$$v_{perm.} = \sqrt{\frac{2 \times E_{perm.}}{m_{dead} + m_{load}}}$$

Maximum permissible load:

$$m_{load} = \frac{2 \times E_{perm.}}{v^2} - m_{dead}$$

- Note

This data represents the maximum values that can be achieved. Values fluctuate in practice relative to the size of the effective load. Allowance must also be made for the limits of the cushioning capacity of the drive and the permissible impact energy.

Standard cylinders DNCI, with integrated displacement encoder

Technical data

Operating and environmental conditions		
Operating pressure[1]	[bar]	4 ... 8
Operating medium[2]		Compressed air, filtered and unlubricated, filter unit 5 µm
Ambient temperature[3]	[°C]	–20 ... +80
Vibration resistance		To DIN/IEC 68 Parts 2 – 6, severity level 2
Continuous shock resistance		To DIN/IEC 68 Parts 2 – 82, severity level 2
CE symbol (declaration of conformance)		In accordance with EU EMC Directive
Protection class (displacement encoder)		IP65 to IEC 60 529
Corrosion resistance class CRC[4]		1

1) Only applies for applications with the Soft Stop end position controller SPC11 and axis controller SPC200
2) The proportional directional control valve MPYE used requires the characteristic values
3) Note operating range of proximity sensors
4) Corrosion resistance class 1 according to Festo standard 940 070
Components requiring low corrosion resistance. Transport and storage protection. Parts that do not have primarily decorative surface requirements, e.g. in internal areas that are not visible or behind covers.

Weights [g] with displacement encoder					
Piston ∅		32	40	50	63
Basic drive DNCI-...					
	Product weight with 0 mm stroke	521	853	1,319	1,914
	Additional weight per 10 mm stroke	30	44	62	71
	Moving load with 0 mm stroke	95	175	316	383
	Additional weight per 10 mm stroke	8	14	23	23
Drive with through piston rod DNCI-...-S2					
	Product weight with 0 mm stroke	586	981	1,553	2,165
	Additional weight per 10 mm stroke	39	60	87	96
	Moving load with 0 mm stroke	155	164	297	364
	Additional weight per 10 mm stroke	17	30	48	48
Additional weight with extended piston rod K8					
	Additional weight per 10 mm stroke	8	14	23	23
Additional weight with clamping cartridge KP					
	Product weight	234	394	700	1,147
Additional weight with guide unit FENG-...					
	Product weight with 0 mm stroke	1,530	2,370	4,030	5,410
	Additional weight per 10 mm stroke	18	32	50	62

Materials

Sectional view

Standard cylinders		
1	Piston rod	High-alloy steel
2	Cylinder barrel	Anodised aluminium
3	Bearing/end caps	Die-cast aluminium
–	Dynamic seals	Polyurethane TPE-U
–	Static seals	Nitrile rubber
–	Lubricant	Klüberplex BE31-102
Displacement encoder		
–	Sensor housing	Polyacetate
–	Cable sheath	Polyurethane
–	Plug housing	Polybuteneterephthalate
–	Wall mounting plate	Polyacetate
–	Screws for mounting plate	Steel

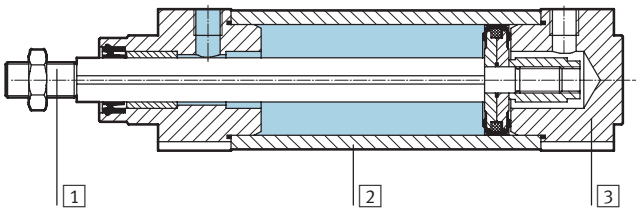

Standard cylinders DNCI, with integrated displacement encoder

Technical data

Positioning characteristics with axis controller SPC200						
Piston ∅			32	40	50	63
Repetition accuracy	horizontal	[mm]	< ±0.5			
	vertical	[mm]	< ±0.5			
Assembly position			Any			
Minimum load, horizontal		[kg]	3	5	8	12
Maximum load, horizontal		[kg]	45	75	120	180
Minimum load, vertical[1]		[kg]	3	5	8	12
Maximum load, vertical[1]		[kg]	15	25	40	60
Min. travel speed		[m/s]	0.05			
Max. speed of travel		[m/s]	1.5			
Typ. positioning time, long stroke[3]		[s]	0.45/0.70	0.50/0.75	0.65/0.80	0.55/0.75
Typ. positioning time, short stroke[4]		[s]	0.35/0.55	0.40/0.55	0.45/0.60	0.40/0.55
Minimum positioning stroke[2]		[%]	< 3			
Stroke reduction[5]		[mm]	10		15	
Recommended proportional directional control valve			➔ 21			

1) Only in conjunction with an external guide
2) In relation to the maximum stroke of the drive, but never more than 20 mm
3) At 6 bar, horizontal mounting position, DNCI-XX-500, 400 mm positioning travel at min./max. load
4) At 6 bar, horizontal mounting position, DNCI-XX-500, 100 mm positioning travel at min./max. load
5) The stroke reduction is to be maintained on every side of the drive, the max. positionable stroke is therefore: stroke – 2x stroke reduction

Positioning characteristics with end position controller SPC11					
Piston ∅		32	40	50	63
Repetition accuracy of a mid-position[1]	[mm]	±2			
Assembly position		Horizontal			
Minimum load, horizontal[2]	[kg]	3	5	8	12
Maximum load, horizontal[2]	[kg]	45	75	120	180
Travel time		➔ Software Tool “SoftStop”: www.festo.com/en/engineering			
Recommended proportional directional control valve		➔ 21			

1) In the stroke range from 100 … 500 mm
2) Load = effective load + mass of all moving parts on the drive

Electrical data, displacement encoder		
Linearity error[1]	[mm]	±(0.07±0.02xL)
Max. speed of travel	[m/s]	1.5
Ambient temperature	[°C]	–20 … +80
Max. temperature coefficient	[ppm/°K]	30
Protection class		IP65
CE symbol (declaration of conformance)		In accordance with EU EMC Directive
Max. permitted magnetic disruption field at 100 mm interval from the sensor[2]	[kA/m]	10
Electrical connection		Cable with 8-pin plug, round type M12
Cable length	[m]	1.5

1) Maximum deviation of the output signal from ”best fit” line (characteristic curve with nominal gradient).
L = Length of measuring system in meters
2) See also mounting conditions

Torques and lateral forces

The piston rod must not absorb any torque. We therefore recommend that an external guide FENG-KF be used with the drive DNCI. The guide unit is delivered installed.

The permissible static and dynamic characteristic load values with and without attached guide as well as with regard to the technical data of the variants (S2, S8, S9)
➔ Volume 1 (standard cylinder DNC)

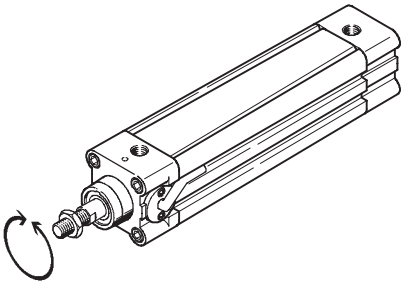

Mounting conditions

When mounting a drive A with magnet (for position sensing), in addition to a standard cylinder DNCI, the following conditions must be observed:

X Minimum distance between the drives
Y Offset between the drives on the bearing cap

Parallel assembly

If the offset Y = 0 mm, the drives can be assembled directly next to one another.

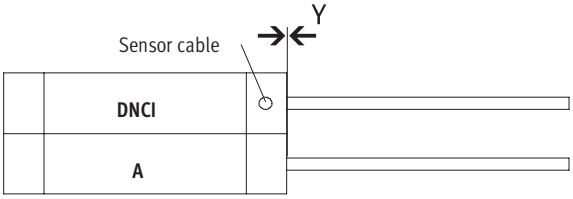

Offset assembly, cable outlet between the drives

If the offset Y > 0 mm and the cable outlet is between the drives, the distance from X > 70 mm must be observed.

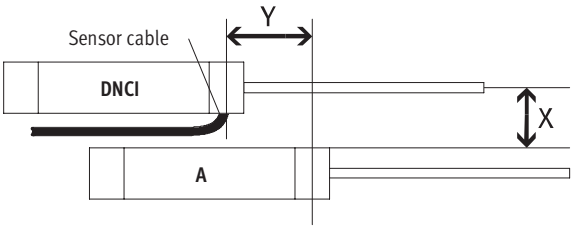

Offset assembly, cable outlet upwards or downwards

If the offset Y > 0 mm and the cable outlet is up or down, the distance from X > 60 mm must be observed.

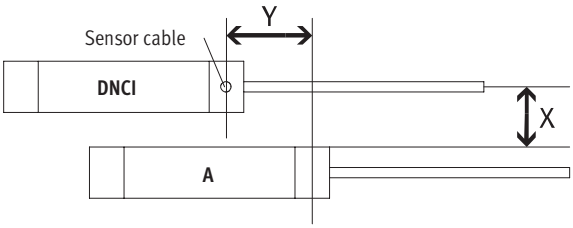

Pin assignment of plug, view of plug

Pin	Function	Colour
1	5 V	black
2	GND	brown
3	sin+	red
4	sin–	orange
5	cos–	green
6	cos+	yellow
7	Screening	Screening
8	–	–

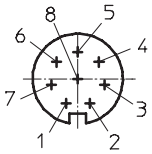

Dimensions Download CAD data ➔ **www.festo.com/en/engineering**

Basic version

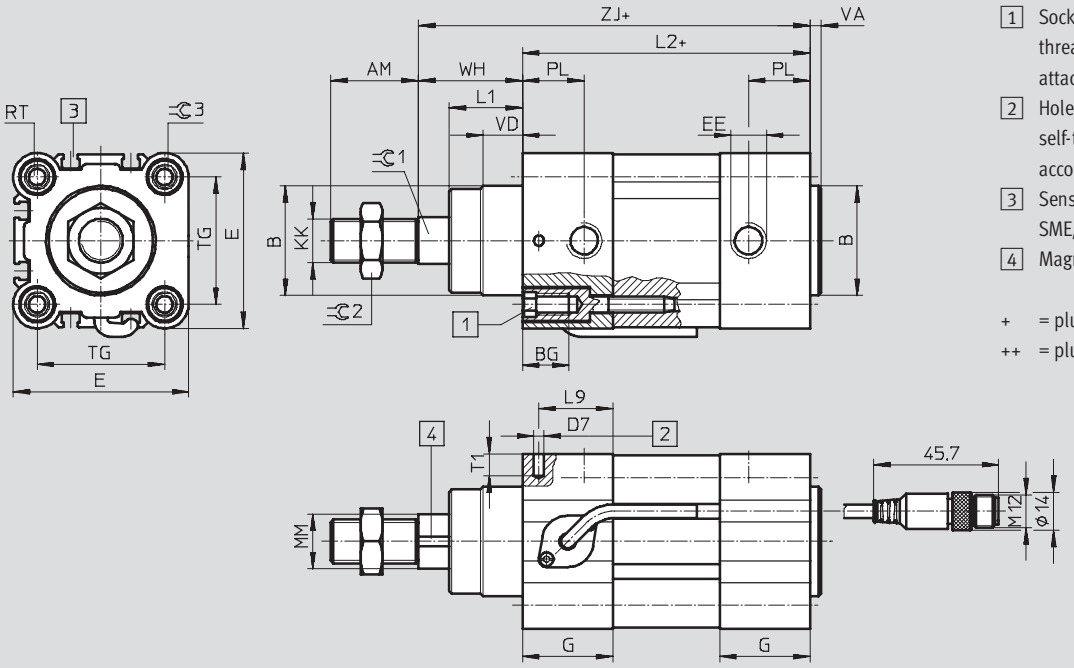

1 Socket head screw with female thread for mounting attachments
2 Hole for securing the earthing self-tapping M4 screw according to DIN 7500
3 Sensor slot for proximity sensor SME/SMT-8
4 Magnetic measuring band

\+ = plus stroke length
++ = plus 2x stroke length

S2 – Through piston rod

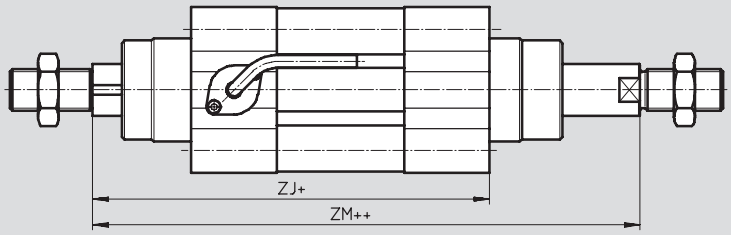

\+ = plus stroke length
++ = plus 2x stroke length

S2 / KP – Through piston rod with clamping cartridge

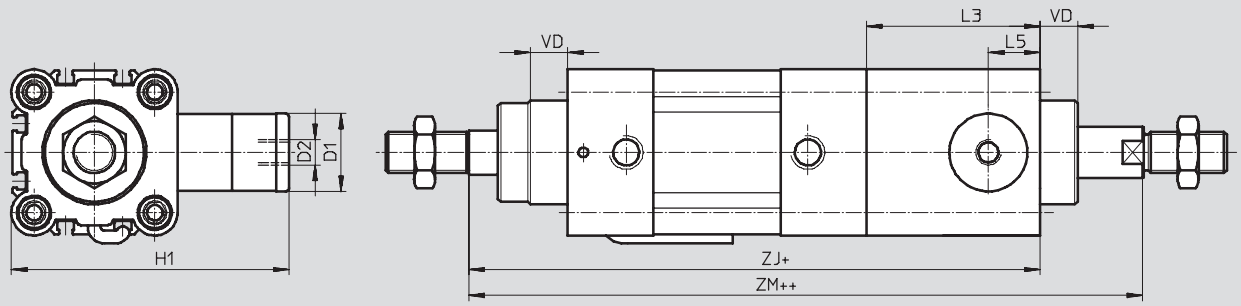

K8 – Extended piston rod

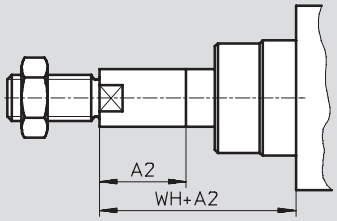

Standard cylinders DNCI, with integrated displacement encoder

Technical data

∅ [mm]	AM	A2 max.	B ∅ d11	BG	D1 ∅ f9	D2	D7 ∅	E	EE	G	H1
32	22	500	30	16	20	M5	3.7	45	G⅛	28	67
40	24	500	35	16	24	G⅛	3.7	54	G¼	33	88
50	32	500	40	17	30	G⅛	3.7	64	G¼	33	107
63	32	500	45	17	38	G⅛	3.7	75	G⅜	40.5	123

∅ [mm]	KK	L1	L2	L3	L5	L9	MM ∅ f8	PL	RT	T1	TG
32	M10x1.25	18	94	45	14	22.5	12	15.6	M6	8	32.5
40	M12x1.25	21.3	105	53	16	27	16	14	M6	8	38
50	M16x1.5	26.8	106	67	20	27	20	14	M8	8	46.5
63	M16x1.5	27	121	76	24	33	20	17	M8	8	56.5

∅ [mm]	PI	VD	WH	ZJ		ZM		=⊂1	=⊂2	=⊂3
					KP		KP			
32	4	10	26	120	165	148	193	10	16	6
40	4	10.8	30	135	188	167	220	13	18	6
50	4	14.3	37	143	210	183	250	17	24	8
63	4	14.5	37	158	234	199	275	17	24	8

Dimensions Download CAD data ➔ **www.festo.com/en/engineering**

Guide unit FENG-KF

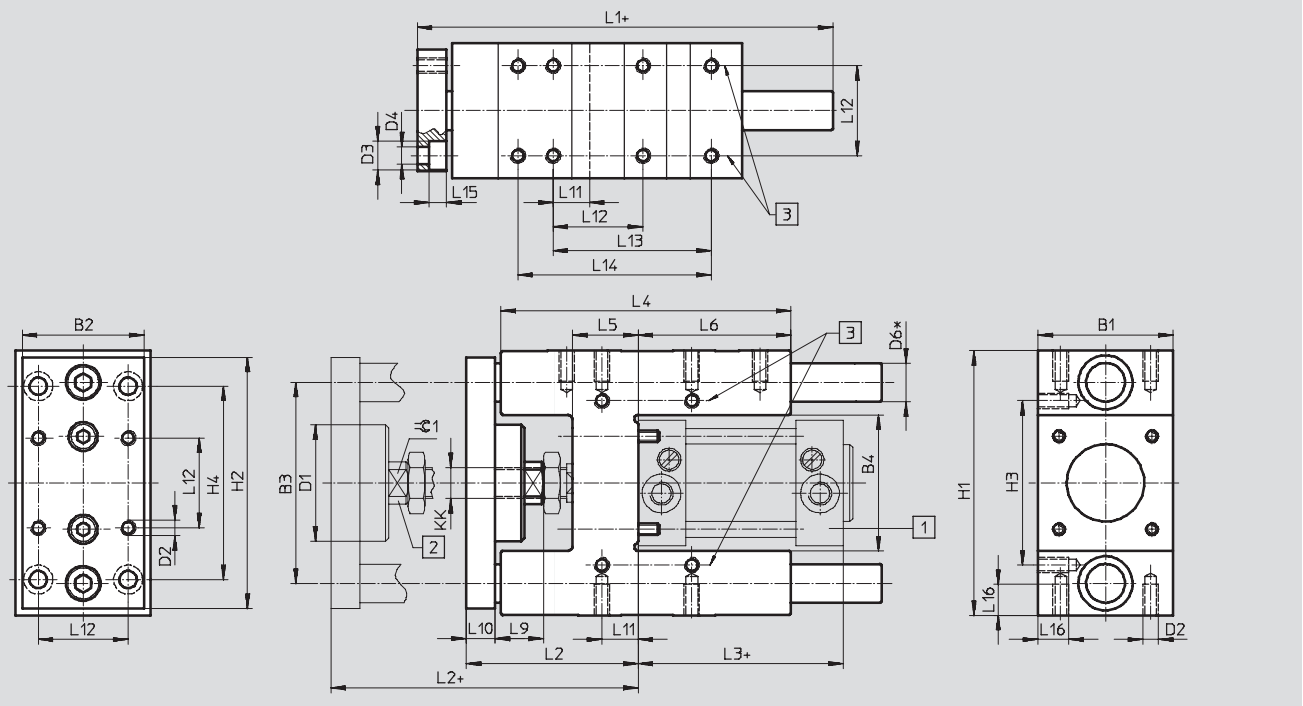

Standard cylinders DNCI, with integrated displacement encoder

Technical data

For ∅ [mm]	B1 -0.3	B2	B3 ±0.2	B4 ±0.3	D1 ∅	D2	D3 ∅	D4 ∅	D6 ∅ h6	H1
32	50	45	74	50.5	44	M6	11	6.6	12	$97_{-0.4}$
40	58	54	87	58.5	44	M6	11	6.6	16	$115_{-0.4}$
50	70	63	104	70.5	60	M8	15	9	20	$137_{-0.5}$
63	85	80	119	85.5	60	M8	15	9	20	$152_{-0.5}$

For ∅ [mm]	H2	H3 ±0.2	H4 ±0.2	KK	L1	L2	L3	L4	L5	L6
32	90	61	78	M10x1.25	155	67_{+5}	94	125	24	76
40	110	69	84	M12x1.25	170	75_{+5}	105	140	28	81
50	130	85	100	M16x1	188	89_{+10}	106	150	34	79
63	145	100	105	M16x1	220	89_{+10}	121	182	34	111

For ∅ [mm]	L9	L10	L11	L12 ±0.2	L13 ±0.2	L14 ±0.2	L15	L16	⌯1
32	20	12	4.3	32.5	70.3	78	6.5	12	15
40	22	12	11	38	84	–	6.5	14	15
50	25	15	18.8	46.5	81.8	100	9	16	19
63	25	15	15.3	56.5	105	–	9	16	19

Standard cylinders DNCI, with integrated displacement encoder

Ordering data – Modular products

FESTO

M Mandatory data

Module No.	Function	Piston ∅	Stroke	Cushioning	Position sensing
535 411 535 412 535 413 535 414	DNCI	32 40 50 63	10 … 2,000	P	A
Order example					
535 411	**DNCI** –	**32** –	**100** –	**P** –	**A** –

Ordering table

	Piston ∅	32	40	50	63	Condi-tions	Code		Enter code
M	Module No.	**535 411**	**535 412**	**535 413**	**535 414**				
	Function	Standard cylinder with integrated displacement encoder, non-rotating piston rod					**DNCI**		DNCI
	Piston ∅ [mm]	32	40	50	63		**-...**		
	Stroke [mm]	10 … 2,000				1	**-...**		
	Cushioning	Flexible cushioning rings/pads at both ends					**-P**		-P
↓	Position sensing	For proximity sensing					**-A**		-A

1 **Stroke** Can only be used as a positioning drive without reservation in the range from 100 … 500 mm

Transfer order code

	DNCI	–		–		–	**P**	–	**A**	–

Standard cylinders DNCI, with integrated displacement encoder

Ordering data – Modular products

FESTO

0 Options				
Type of piston rod	Piston rod extended at front	Clamping unit	Guide	Measuring head
S2	...K8	KP	FENG	MS
–	–	–	–	–

Ordering table

	Piston ∅	32	40	50	63	Condi-tions	Code		Enter code
0	Type of piston rod	Through piston rod					**-S2**		
	Piston rod extended [mm]	1 ... 500				2	**-...K8**		
	Clamping unit	Clamping cartridge				3	**-KP**		
	Guide	Guide unit with ball bearing guide on the sensor head side				4	**-FENG**		
	Measuring head	No measuring head					**-MS**		

2 **K8** In combination with piston rod type S2, the piston rod is only extended at the front (the side facing the measuring head)

3 **K9** Only with piston rod type S2

4 **FENG** Maximum stroke length 500 mm

Transfer order code

– – – – – –

Foot mounting HNC

Material:
galvanised steel
Free of copper, PTFE and silicone

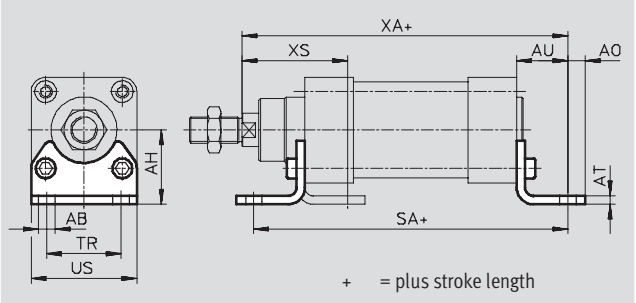

Dimensions and ordering data							
For ∅ [mm]	AB ∅	AH	AO	AT	AU	SA	
						Basic cylinder	KP
32	7	32	6.5	5	24	142	187
40	10	36	9	5	28	161	214
50	10	45	10.5	6	32	170	237
63	10	50	12.5	6	32	185	261

For ∅ [mm]	TR	US	XA		XS	CRC[1]	Weights [g]	Part No.	Type
			Basic cylinder	KP					
32	32	45	144	189	45	2	135	**174 369**	**HNC-32**
40	36	54	163	216	53	2	180	**174 370**	**HNC-40**
50	45	64	175	242	62	2	325	**174 371**	**HNC-50**
63	50	75	190	266	63	2	405	**174 372**	**HNC-63**

1) Corrosion resistance class 2 according to Festo standard 940 070
Components requiring moderate corrosion resistance. Externally visible parts with primarily decorative surface requirements which are in direct contact with a normal industrial environment or media such as coolants or lubricating agents

Flange mounting FNC

Material:
FNC: galvanised steel
Free of copper, PTFE and silicone

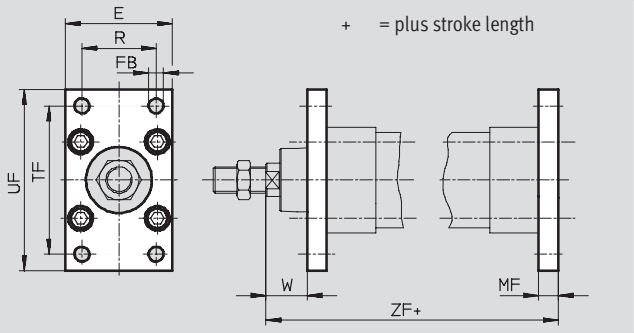

Dimensions and ordering data													
For ∅ [mm]	E	TC ∅ H13	MF	R	TF	UF	W	ZF Basic cylinder	ZF KP	CRC[1]	Weights [g]	Part No.	Type
32	45	7	10	32	64	80	16	130	175	2	240	**174 376**	**FNC-32**
40	54	9	10	36	72	90	20	145	198	2	280	**174 377**	**FNC-40**
50	65	9	12	45	90	110	25	155	222	2	520	**174 378**	**FNC-50**
63	75	9	12	50	100	120	25	170	246	2	690	**174 379**	**FNC-63**

1) Corrosion resistance class 2 according to Festo standard 940 070
Components requiring moderate corrosion resistance. Externally visible parts with primarily decorative surface requirements which are in direct contact with a normal industrial environment or media such as coolants or lubricating agents

Rod eye SGS

Scope of delivery:
1 rod eye, 1 hex nut to DIN 439

Material:
galvanised steel

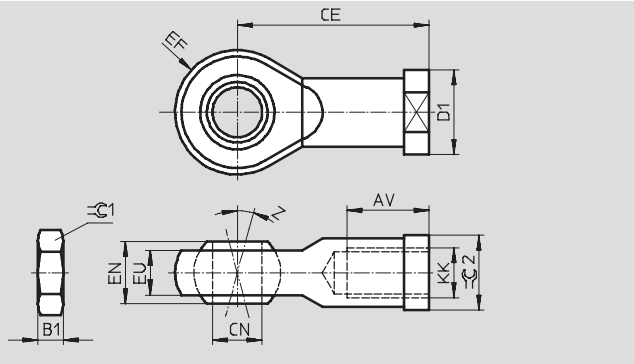

Dimensions and ordering data														
For ∅ [mm]	AV	B1	CE	CN ∅ H7	D1 ∅	EF ±0.5	EN	Z [°]	⬡1	⬡2	CRC[1]	Weights [g]	Part No.	Type
M10x1.25	20 –2	5	43	10	19	14	14	13	17	17	2	70	**9 261**	**SGS-M10x1,25**
M12x1.25	22 –2	6	50	12	22	16	16	13	19	19	2	105	**9 262**	**SGS-M12x1,25**
M16x1.5	28 –2	8	64	16	27	21	21	15	24	22	2	210	**9 263**	**SGS-M16x1,5**

1) Corrosion resistance class 2 according to Festo standard 940 070
Components requiring moderate corrosion resistance. Externally visible parts with primarily decorative surface requirements which are in direct contact with a normal industrial environment or media such as coolants or lubricating agents

Trunnion mounting kit ZNCM

The mounting kit can be attached at any position along the profile barrel of a cylinder.

Material:
tempered steel

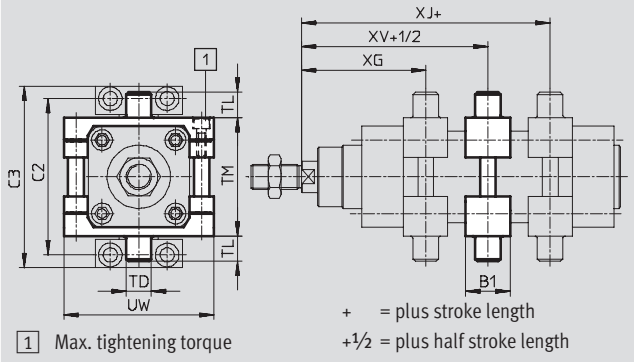

Dimensions and ordering data									
For ∅ [mm]	B1	C2	C3	TD ∅ e9	TL	TM	UW	XG Basic cylinder	XG KP
32	30	71	86	12	12	50	65	66.1	111.1
40	32	87	105	16	16	63	75	75.6	128.6
50	34	99	117	16	16	75	95	83.6	150.6
63	41	116	136	20	20	90	105	93.1	169.1

For ∅ [mm]	XJ Basic cylinder	XJ KP	XV Basic cylinder	XV KP	Max. tightening torque [Nm]	CRC[1]	Weights [g]	Part No.	Type
32	79.9	124.9	73	118	4+1	2	210	**163 525**	**ZNCM-32**
40	89.4	142.4	82.5	135.5	8+1	2	385	**163 526**	**ZNCM-40**
50	96.4	163.4	90	157	8+2	2	595	**163 527**	**ZNCM-50**
63	101.9	177.9	97.5	173.5	18+2	2	890	**163 528**	**ZNCM-63**

1) Corrosion resistance class 2 according to Festo standard 940 070
Components requiring moderate corrosion resistance. Externally visible parts with primarily decorative surface requirements which are in direct contact with a normal industrial environment or media such as coolants or lubricating agents

Trunnion supports LNZG

Material:
Trunnion support:
Anodised aluminium
Plain bearing: Plastic

Free of copper, PTFE and silicone

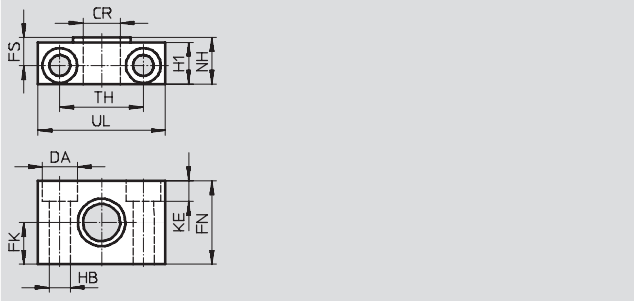

Dimensions and ordering data															
For ∅ [mm]	CR ∅ D11	DA ∅ H13	FK ∅ ±0.1	FN	FS	H1	HB ∅ H13	KE	NH	TH ±0.2	UL	CRC[1]	Weights [g]	Part No.	Type
32	12	11	15	30	10.5	15	6.6	6.8	18	32	46	2	125	**32 959**	**LNZG-32**
40, 50	16	15	18	36	12	18	9	9	21	36	55	2	400	**32 960**	**LNZG-40/50**
63	20	18	20	40	13	20	11	11	23	42	65	2	480	**32 961**	**LNZG-63/80**

1) Corrosion resistance class 2 according to Festo standard 940 070
Components requiring moderate corrosion resistance. Externally visible parts with primarily decorative surface requirements which are in direct contact with a normal industrial environment or media such as coolants or lubricating agents

Ordering data					
	For ∅	Remarks	Part No.	Type	PU[1]
Push-in fitting					Technical data ➔ Volume 3
	32	–	**186 098**	**QS-G⅛-8**	10
	40		**186 099**	**QS-G¼-8**	10
	50		**186 101**	**QS-G¼-10**	10
	63		**186 100**	**QS-G⅜-8**	10
			186 102	**QS-G⅜-10**	10
Slot cover					Technical data ➔ Volume 1
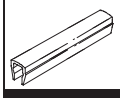	32, 40, 50, 63	every 0.5 m	**151 680**	**ABP-5-S**	2

1) Packaging unit quantity

Ordering data – Proportional directional control valves					Technical data➔5 / 1.5-2
	For ∅ [mm]	Stroke [mm]	Part No.	Type	
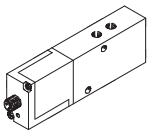	For applications with axis controller SPC200				
	32	50 … 150	**154 200**	**MPYE-5-M5-010-B**	
		150 … 400	**151 692**	**MPYE-5-⅛-LF-010-B**	
		> 400	**151 693**	**MPYE-5-⅛-HF-010-B**	
	40	50 … 300	**151 692**	**MPYE-5-⅛-LF-010-B**	
		> 300	**151 693**	**MPYE-5-⅛-HF-010-B**	
	50	50 … 200	**151 692**	**MPYE-5-⅛-LF-010-B**	
		200 … 900	**151 693**	**MPYE-5-⅛-HF-010-B**	
		> 900	**151 694**	**MPYE-5-¼-010-B**	
	63	50 … 300	**151 693**	**MPYE-5-⅛-HF-010-B**	
		300 … 1,000	**151 694**	**MPYE-5-¼-010-B**	
		> 1,000	**151 695**	**MPYE-5-⅜-010-B**	
	For applications with Soft Stop end position controller SPC11				
	32	100 … 500	**151 692**	**MPYE-5-⅛-LF-010-B**	
		> 500	**151 693**	**MPYE-5-⅛-HF-010-B**	
	40	100 … 320	**151 692**	**MPYE-5-⅛-LF-010-B**	
		320 … 500	**151 693**	**MPYE-5-⅛-HF-010-B**	
		> 500	**151 694**	**MPYE-5-¼-010-B**	
	50	100 … 250	**151 692**	**MPYE-5-⅛-LF-010-B**	
		250 … 400	**151 693**	**MPYE-5-⅛-HF-010-B**	
		> 500	**151 694**	**MPYE-5-¼-010-B**	
	63	100 … 200	**151 692**	**MPYE-5-⅛-LF-010-B**	
		200 … 400	**151 693**	**MPYE-5-⅛-HF-010-B**	
		400 … 650	**151 694**	**MPYE-5-¼-010-B**	
		> 650	**151 695**	**MPYE-5-⅜-010-B**	

Note

Recommended proximity sensor
➔ Standard cylinder DNC, Volume 1

Standard cylinders DNCM, external displacement encoder

Key features

FESTO

Individual positioning components with standard cylinder DNCM ...

Proportional directional control valve
MPYE-...
➔ 5 / 1.5-2

Soft Stop ➔ 5 / 1.4-2

End position controller
SPC11-POT-TLF

Positioning technology ➔ 5 / 1.3-2

Axis interface
SPC-AIF-POT

Axis positioning controller
SPC200

Standard cylinders DNCM, external displacement encoder

Type code

DNCM	–	32	–	400	–	P	–	POT2	–		–	FENG	–	

Type

DNCM	Standard cylinder

Piston ∅ [mm]

Stroke [mm]

Cushioning

P	Flexible cushioning rings/pads at both ends

Encoder attachment position

POT1	bottom
POT2	at rear
POT3	top

Piston rod type

S2	Through
S20	Through, hollow

Guide

FENG	Guide unit with ball bearing guide

Position sensing

A	For proximity sensing

Standard cylinders DNCM, external displacement encoder

Peripherals overview

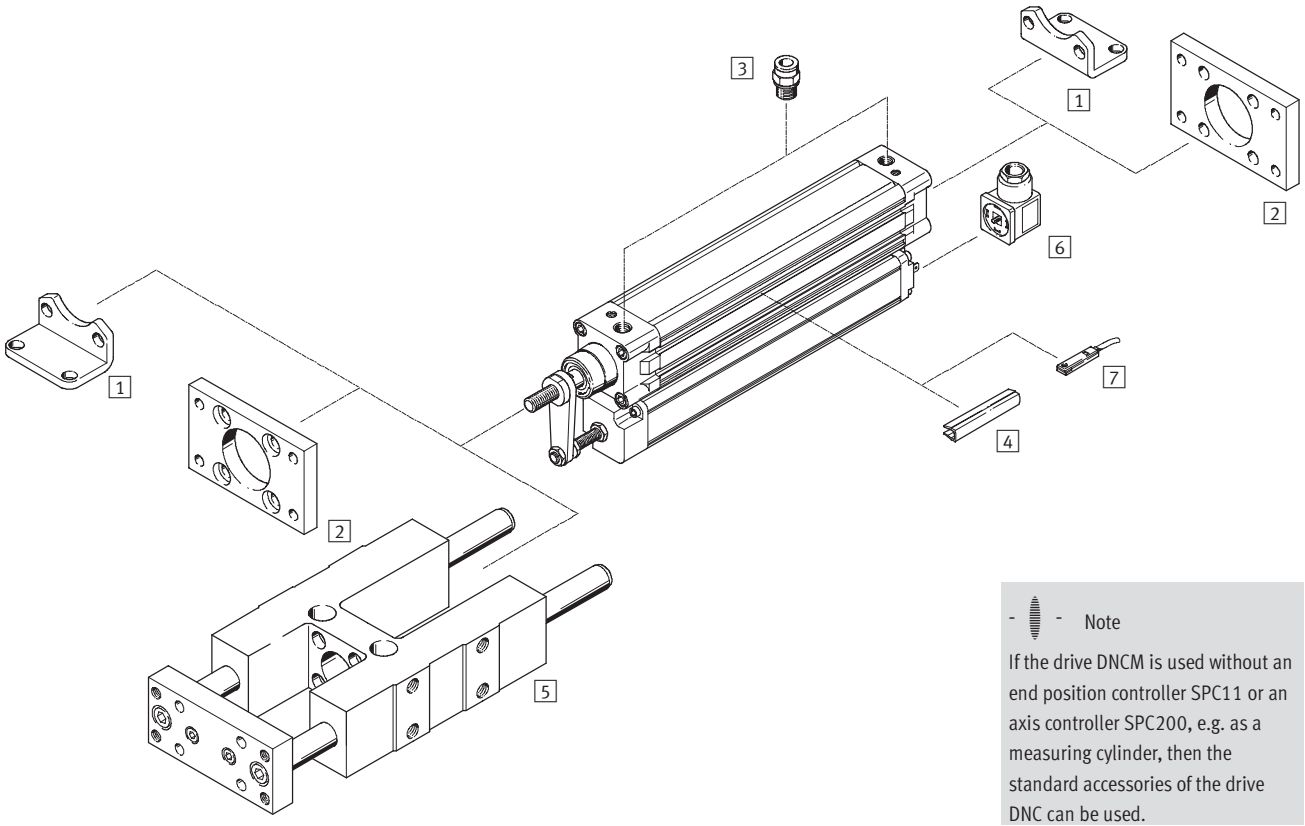

Note

If the drive DNCM is used without an end position controller SPC11 or an axis controller SPC200, e.g. as a measuring cylinder, then the standard accessories of the drive DNC can be used.

Standard cylinders DNCM, external displacement encoder

Peripherals overview

Accessories			
	Type	Brief description	➔ Page
1	Foot mounting HNC	to mount the drive on the bearing and end cap	36
2	Flange mounting FNC	to mount the drive on the bearing and end cap	36
3	Push-in fitting QS	for connecting compressed air tubing with standard O.D.	37
4	Slot cover ABP-5-S	to protect against the ingress of dirt	36
5	Guide unit[1)] FENG-KF	to protect against torsion at high torque loads	36
6	Plug socket MSSD-C-4P	to connect the displacement encoder, is part of the end position controller SPC11 and the axis controller SPC200	37
7	Proximity sensors SME-/SMT-8	for additional sensing of the piston position, can be ordered optionally, only in conjunction with the order code A in the drive's modular product section.	Volume 1

1) FENG-KF must be attached to the piston rod such that backlash is excluded.

Standard cylinders DNCM, external displacement encoder

Technical data

FESTO

Function

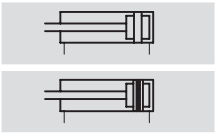

Diameter
32 mm and 50 mm

Stroke length
100 ... 500 mm

General technical data			
Piston ∅		32	50
Design		Piston	
		Piston rod	
		Profile barrel	
Mode of operation		Double-acting	
Operating medium[1]		Compressed air, filtered and unlubricated, filter unit 5 µm	
Cushioning		Flexible cushioning rings/pads at both ends	
Position sensing		Displacement encoder, attached externally	
		Proximity sensor[2]	
Measuring principle (displacement encoder)		Analogue with encoder, contacting and absolute measurement	
Type of mounting		Foot mounting	
Stroke[3]	[mm]	100, 160, 200, 250, 320, 400, 500	
Torsion protection/Guide[4]		Guide rod with yoke, with ball bearing guide	
Stroke	[mm]	100, 160, 200, 250	
Pneumatic connection		G⅛	G¼
Electrical connection		4-pin plug, type A DIN 43 650	

1) The proportional directional control valve MPYE used requires the characteristic values.
2) Not included in the scope of delivery, can be ordered as an option.
3) Note stroke reduction in conjunction with SPC200.
4) FENG-KF guide must be ordered as an option and will be supplied attached, the max. stroke is reduced.

Forces [N] and impact energy [Nm]		
Piston ∅	32	50
Theoretical force at 6 bar advancing	483	1,178
Theoretical force at 6 bar retracting	415	990
Max. impact energy at end positions	0.1	0.2

Permissible impact velocity:

$$v_{perm.} = \sqrt{\frac{2 \times E_{perm.}}{m_{dead} + m_{load}}}$$

Maximum permissible load:

$$m_{load} = \frac{2 \times E_{perm.}}{v^2} - m_{dead}$$

Note

This data represents the maximum values which can be achieved. Values fluctuate in practice relative to the size of the effective load. Allowance must also be made for the limits of the cushioning capacity of the drive and the permissible impact energy.

Standard cylinders DNCM, external displacement encoder

Technical data

Positioning characteristics with axis controller SPC200				
Piston ∅			32	50
Repetition accuracy	horizontal	[mm]	±0.2	
	vertical	[mm]	±0.2 (for stroke 0 … 200 mm)	
		[mm]	±0.4 (for stroke 200 … 500 mm)	
Mounting position			Any	
Minimum load, horizontal[1]		[kg]	3	8
Maximum load, horizontal[1)6)]		[kg]	45	120
Minimum load, vertical[1]		[kg]	3	8
Maximum load, vertical[1)6)]		[kg]	15	40
Min. speed of travel		[m/s]	0.05	0.05
Max. speed of travel		[m/s]	2.2	1.7
Typ. positioning time, long stroke[2]		[s]	0.45/0.75	0.65/0.85
Typ. positioning time, short stroke[3]		[s]	0.35/0.55	0.45/0.60
Minimum positioning stroke[4]		[%]	3	3
Stroke reduction[5]		[mm]	≥ 10	≥ 15
Recommended proportional directional control valve			➔ 37	

1) Load = effective load + mass of all moving parts on the drive
2) At 6 bar, horizontal mounting position, DNCM-XX-500, 400 mm positioning travel at min./max. load
3) At 6 bar, horizontal mounting position, DNCM-XX-500, 100 mm positioning travel at min./max. load
4) In relation to the maximum stroke of the drive, but never more than 20 mm.
5) The stroke reserve is to be maintained on every side of the drive, the max. positionable stroke is therefore: Stroke – 2x stroke reserve
6) With external guide

Positioning characteristics with Soft Stop end position controller SPC11			
Piston ∅		32	50
Repetition accuracy of a mid-position[1]	[mm]	±2	
Mounting position		horizontal	
Minimum load, horizontal[2]	[kg]	3	8
Maximum load, horizontal[2]	[kg]	45	120
Travel time		➔ Software Tool “SoftStop”: www.festo.com/en/engineering	
Recommended proportional directional control valve		➔ 37	

1) In the stroke range from 100 … 500 mm
2) Load = effective load + mass of all moving parts on the drive

Operating and environmental conditions			
Piston ∅		32	50
Operating pressure[1]	[bar]	4 … 8	
Ambient temperature[2]	[°C]	–10 … +80	
Vibration resistance		To DIN/IEC 68 Parts 2 -6, severity level 2	
Continuous shock resistance		To DIN/IEC 68 Parts 2 -27, severity level 2	
CE marking symbol (see conformity declaration)		As per EU EMC directive	
Protection class (displacement encoder)		IP54 to IEC 60 529	
Corrosion resistance class CRC[3]		1	

1) Only applies for applications with the Soft Stop end position controller SPC11 and axis controller SPC200.
2) Note operating range of proximity sensors
3) Corrosion resistance class 1 according to Festo standard 940 070
Components requiring low corrosion resistance. Transport and storage protection.

Weights [g] with displacement encoder								
		Stroke						
Piston ∅		100	160	200	250	320	400	500
32	Product weight	1,160	1,406	1,640	1,990	2,312	2,640	3,190
	Moving load	310	375	430	490	565	660	760
50	Product weight	2,270	2,684	3,030	3,520	4,038	4,590	5,420
	Moving load	850	1,010	1,125	1,265	1,455	1,675	1,935

Standard cylinders DNCM, external displacement encoder

Technical data

Electrical data, displacement encoder									
Stroke			100	160	200	250	320	400	500
Power supply[1]		[V DC]	10						
Max. current consumption		[mA]	4						
Wiper current	recommended	[µA]	< 1						
	maximum[2]	[mA]	10						
Connection resistance		[kΩ]	3	5					
Connection resistance tolerance		[%]	±20						
Resolution		[mm]	≤ 0.01						
Independent linearity	maximum	[%]	0.09	0.08	0.07	0.06	0.05	0.05	0.05
Temperature coefficient		[ppm/°K]	≤ 5						
Interface			Analogue						

1) Stabilised power supply is recommended, max. 42 V DC permissible.
2) Only permissible in the short-term in the event of a fault.

Materials

Sectional view

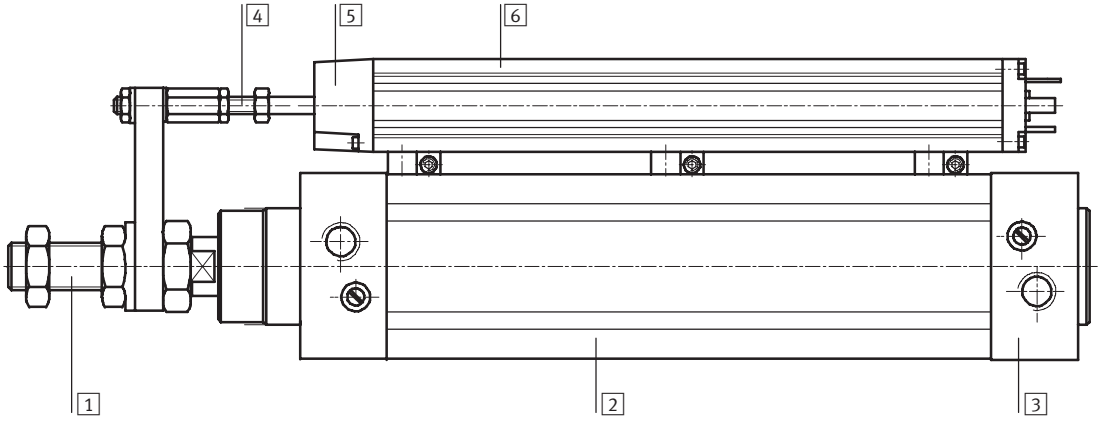

Drive		
1	Piston rod	High-alloy steel
2	Cylinder barrel	Anodised aluminium
3	Bearing/end caps	Die-cast aluminium
–	Dynamic seals	Polyurethane TPE-U
–	Static seals	Nitrile rubber
–	Lubricant	Klüberplex BE31-102
Displacement encoder		
4	Connecting rod	High-alloy steel
5	Bearing cap	Reinforced polyester
6	Profile	Anodised aluminium
–	Resistor element	Conductive plastic
–	Wiper – Contact	Precious metal
	Wiper – Silencer	Elastomer
–	Cover seal	Nitrile rubber
–	Rod seal	Tetrafluoroethylene
–	Lubricant	ISOFLEX Topas MB52

Standard cylinders DNCM, external displacement encoder

Technical data

Torques and lateral forces

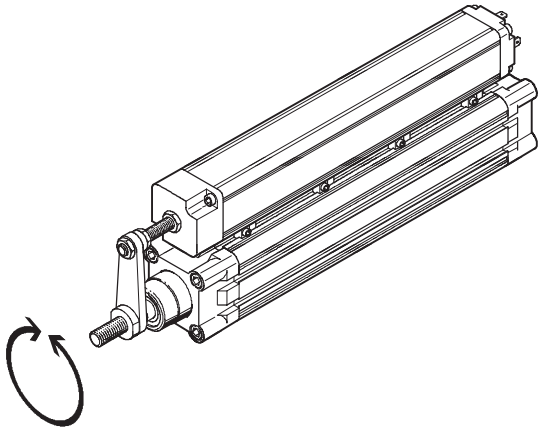

Note

Torques or lateral forces can result in inaccurate measurement results. We therefore recommend that an external guide be used with the drive DNCM.
This must be attached to the piston rod such that backlash is excluded.

Use of the DNCM with the FENG-KF is recommended. The drive is delivered with the guide attached.

The permissible static and dynamic characteristic load values with and without attached guide
➔ Volume 1 (standard cylinder DNC)

Technical data for the S2 and S20 designs of the piston rod
➔ Volume 1 (standard cylinder DNC)

Standard cylinders DNCM, external displacement encoder

Technical data

FESTO

Dimensions Download CAD data ➔ **www.festo.com/en/engineering**

DNCM-...-POT2

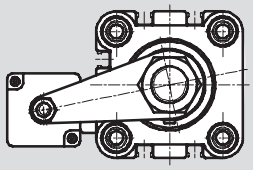

DNCM-...-POT3

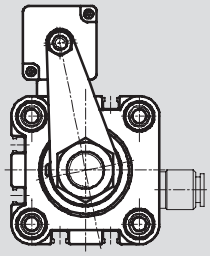

DNCM-...-POT1

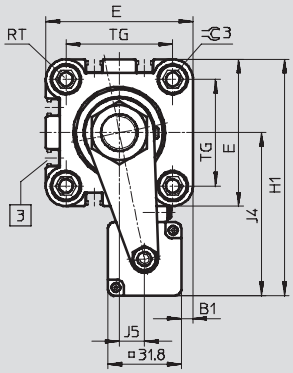

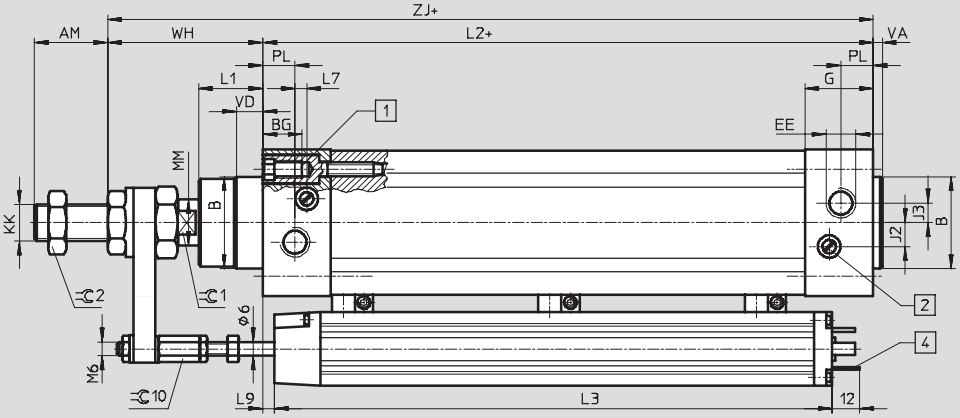

DNCM-...-S2/DNCM-...-S20

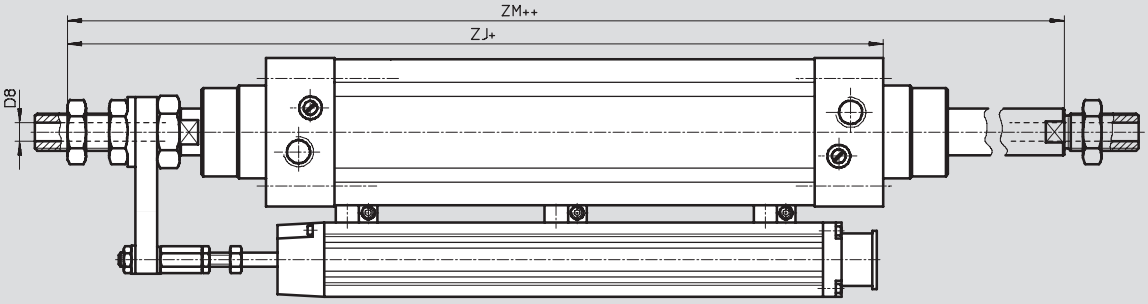

1 Socket head screw with female thread for mounting attachments

2 Regulating screw for adjustable end-position cushioning

3 Sensor slot for proximity sensor SME/SMT-8

4 Plug connector to DIN 43 650-A

\+ = plus stroke length

++ = plus 2x stroke length

Standard cylinders DNCM, external displacement encoder

Technical data

∅ [mm]	AM	B ∅ d11	BG	B1 ±0.8	D8 ∅	E	EE	G	H1 ±1.5
32	22	30	16	0.24	4.5	45	G⅛	25.1	84.4
50	32	40	17	5.6	8	64	G¼	29.6	103.4

∅ [mm]	J2	J3	J4 ±1	J5 ±1	KK	L1	L2
32	6	5.2	45.8	6.3	M10x1.25	18	94
50	10.4	8.5	55.3	10.6	M16x1.5	28	106

∅ [mm]	Stroke [mm]	L3	L7	L9	MM ∅ f8	PL	RT	TG	VA	VD
32	100	201	3.3	6.5 ±2	12	15.6	M6	32.5	4	10
	160	248		1 +2/−1						
	200	298		5 ±2						
	250	349		5.5 ±2						
	320	436		13 ±2						
	400	502		6 ±2						
	500	629		20 ±2						
50	100	201	5.1	6.5 ±2	20	14	M8	46.5	4	11.5
	160	248		1 +2/−1						
	200	298		5 ±2						
	250	349		5.5 ±2						
	320	436		13 ±2						
	400	502		6 ±2						
	500	629		0 +2						

∅ [mm]	WH	ZJ	ZM	=C1	=C2	=C3
32	44.4	138.4	166.4	10	16	6
50	67.4	173.4	213.4	17	24	8

Standard cylinders DNCM, external displacement encoder

Technical data

Dimensions Download CAD data ➔ **www.festo.com/en/engineering**

Guide unit FENG-KF

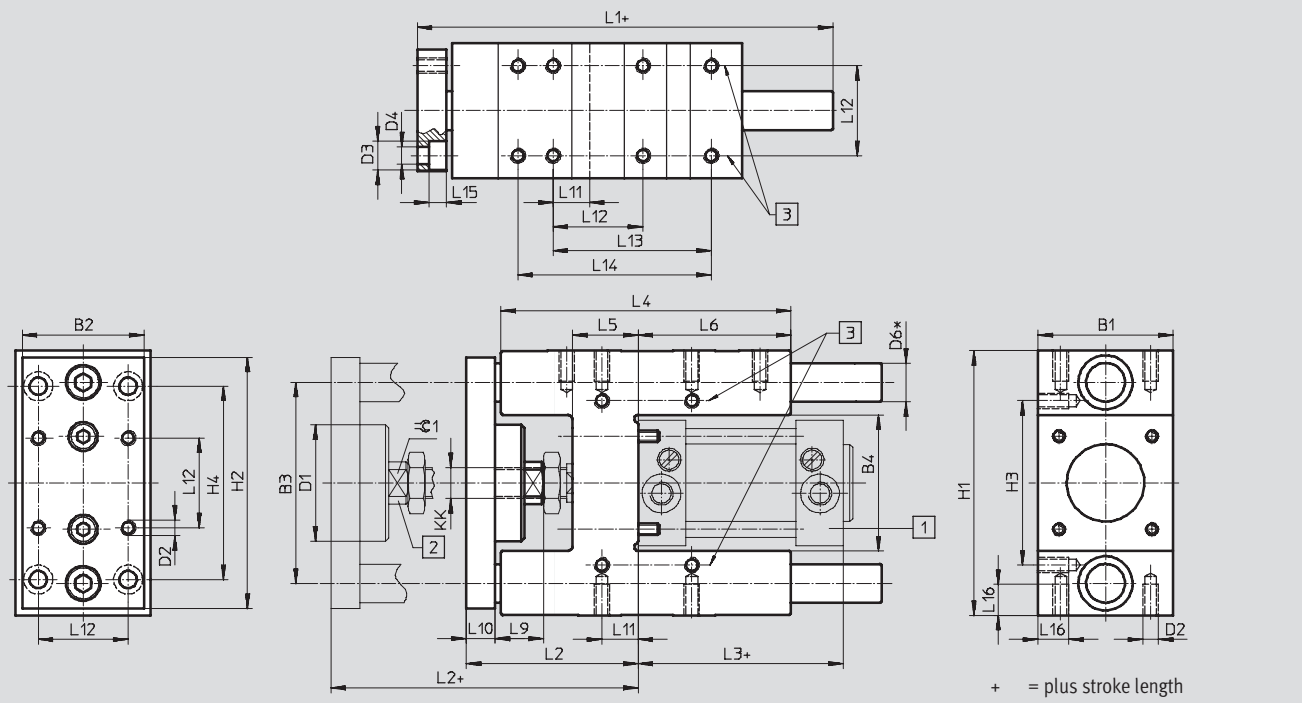

Standard cylinders DNCM, external displacement encoder

Technical data

for ∅ [mm]	B1 -0.3	B2	B3 ±0.2	B4 ±0.3	D1 ∅	D2	D3 ∅	D4 ∅
32	50	45	74	50.5	44	M6	11	6.6
50	70	63	104	70.5	60	M8	15	9

for ∅ [mm]	D6 ∅ h6	H1	H2	H3 ±0.2	H4 ±0.2	KK	L1	L2
32	12	$97_{-0.4}$	90	61	78	M10x1.25	155	67_{+5}
50	20	$137_{-0.5}$	130	85	100	M16x1.5	188	89_{+10}

for ∅ [mm]	L3	L4	L5	L6	L9	L10	L11	L12 ±0.2
32	94	125	24	76	20	12	4.3	32.5
50	106	150	34	79	25	15	18.8	46.5

for ∅ [mm]	L13 ±0.2	L14 ±0.2	L15	L16	⌯1	Stroke [mm]	Weight per 10 mm stroke [g]	Weight [g]
32	70.3	78	6.5	12	15	10 ... 500	18	1 530
50	81.8	100	9	16	19	10 ... 500	50	4 030

Arrangement of the displacement encoder

DNCM-...-POT1 (encoder underneath)

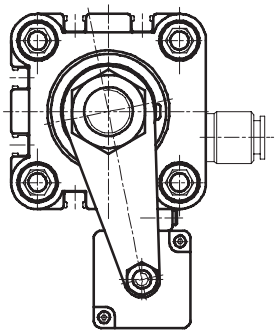

DNCM-...-POT2 (encoder at rear)

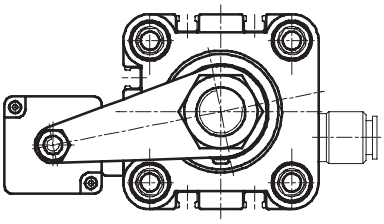

DNCM-...-POT3 (encoder on top)

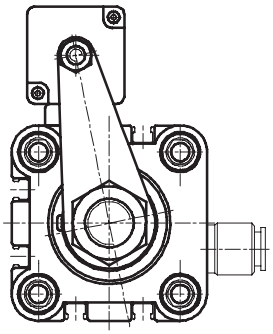

Standard cylinders DNCM, external displacement encoder

Ordering data – Modular product system

M Mandatory data						O Options		
Module No.	**Basic function**	**Size**	**Stroke**	**Cushioning**	**Encoder attachment position**	**Piston rod type**	**Guide**	**Position sensing**
528 940 528 941	DNCM	32 50	100 160 200 250 320 400 500	P	POT1 POT2 POT3	S2 S20	FENG	A
Ordering example								
528 941	**DNCM**	**50**	**500**	**P**	**POT3**	**S20**		**A**

Ordering table

	Size	32	50	Conditions	Code		Enter code
M	Module No.	**528 940**	**528 941**				
	Basic function	Standard cylinder with displacement encoder			**DNCM**		DNCM
	Size [mm]	32	50		**-...**		
	Stroke [mm]	100			**-100**		
		160			**-160**		
		200			**-200**		
		250			**-250**		
		320		1	**-320**		
		400		1	**-400**		
		500		1	**-500**		
	Cushioning	Flexible cushioning rings/plates at both ends			**-P**		-P
	Encoder attachment position	Encoder underneath			**-POT1**		
		Encoder at rear			**-POT2**		
		Encoder on top			**-POT3**		
O	Piston rod type	Through piston rod		1	**-S2**		
		Through, hollow piston rod		1	**-S20**		
	Guide	Guide unit with ball bearing guide KF		2	**-FENG**		
	Position sensing	For proximity sensing			**-A**		

1 **320, 400, 500, S2, S20** Not with guide FENG.

2 **FENG** Only with POT2 encoder. FENG is mounted without backlash.

Transfer order code

	DNCM	–		–		–	**P**	–		–		–		–	

Foot mounting HNC

Material:
Galvanised steel
Free of copper, PTFE and silicone

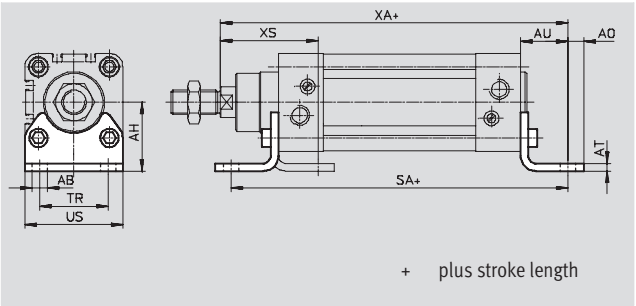

Dimensions and ordering data													
for ∅ [mm]	AB ∅	AH	AO	AT	AU	SA	TR	US	XA	XS	Weight [g]	Part No.	Type
32	7	32	6.5	4	24	142	32	45	144	45	135	**174 369**	**HNC-32**
50	10	45	9.5	5	31	170	45	64	175	62	325	**174 371**	**HNC-50**

Flange mounting FNC

Material:
Galvanised steel
Free of copper, PTFE and silicone

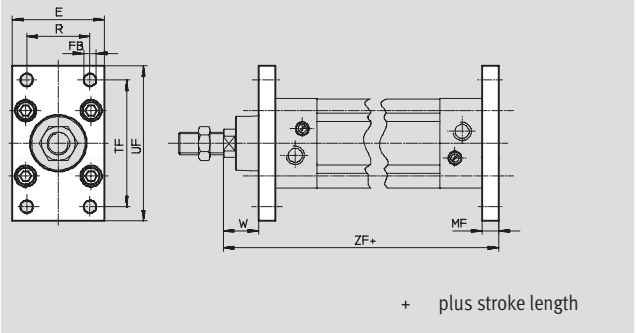

Dimensions and ordering data											
for ∅ [mm]	E	FB ∅ H13	MF	R	TF	UF	W	ZF	Weight [g]	Part No.	Type
32	45	7	10	32	64	80	16	130	240	**174 376**	**FNC-32**
50	65	9	12	45	90	110	25	155	520	**174 378**	**FNC-50**

Ordering data – Slot cover					Technical data ➔ Volume 1
	for ∅ [mm]	Remarks	Part No.	Type	PU[1]
Slot cover ABP-S					
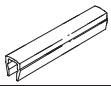	32, 50	0.5 m each	**151 680**	**ABP-5-S**	2

1) Packaging unit quantity

Ordering data – Push-in/threaded fittings					Technical data➔ Volume 3
	for ∅ [mm]	Remarks	Part No.	Type	PU[1]
	32	for connecting compressed air tubing with standard O.D.	**186 098**	**QS-G⅛-8**	10
	50		**186 099**	**QS-G¼-8**	

1) Packaging unit quantity

Ordering data – Proportional directional control valves				Technical data➔ 5 / 1.5-2
	for ∅ [mm]	Stroke [mm]	Part No.	Type
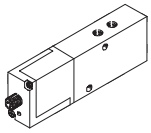	for applications with axis controller SPC200			
	32	100/160/200/250/320	**151 692**	**MPYE-5-⅛-LF-010-B**
		400/500	**151 693**	**MPYE-5-⅛-HF-010-B**
	50	100/160/200/250/320/400/500	**151 693**	**MPYE-5-⅛-HF-010-B**
	for applications with Soft Stop end position controller SPC11			
	32	100/160/200/250/320/400	**151 692**	**MPYE-5-⅛-LF-010-B**
		500	**151 693**	**MPYE-5-⅛-HF-010-B**
	50	100/160/200/250	**151 692**	**MPYE-5-⅛-LF-010-B**
		320/400	**151 693**	**MPYE-5-⅛-HF-010-B**
		500	**151 694**	**MPYE-5-¼-010-B**

Ordering data – Plug socket

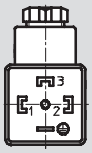

PIN	Pin allocations	Designation	Part No.	Type
1	Power supply	Plug socket	**171 157**	**MSSD-C-4P**
2	Signal			
3	0 V			
PE	PE (yellow), screen			

Note

Recommended proximity sensor
➔ Drive DNC, Volume 1

Product Range and Company Overview

A Complete Suite of Automation Services

Our experienced engineers provide complete support at every stage of your development process, including: conceptualization, analysis, engineering, design, assembly, documentation, validation, and production.

Custom Automation Components
Complete custom engineered solutions

Custom Control Cabinets
Comprehensive engineering support and on-site services

Complete Systems
Shipment, stocking and storage services

The Broadest Range of Automation Components

With a comprehensive line of more than 30,000 automation components, Festo is capable of solving the most complex automation requirements.

Electromechanical
Electromechanical actuators, motors, controllers & drives

Pneumatics
Pneumatic linear and rotary actuators, valves, and air supply

PLCs and I/O Devices
PLC's, operator interfaces, sensors and I/O devices

Supporting Advanced Automation... As No One Else Can!
Festo is a leading global manufacturer of pneumatic and electromechanical systems, components and controls for industrial automation, with more than 12,000 employees in 56 national headquarters serving more than 180 countries. For more than 80 years, Festo has continuously elevated the state of manufacturing with innovations and optimized motion control solutions that deliver higher performing, more profitable automated manufacturing and processing equipment. Our dedication to the advancement of automation extends beyond technology to the education and development of current and future automation and robotics designers with simulation tools, teaching programs, and on-site services.

Quality Assurance, ISO 9001 and ISO 14001 Certifications

Festo Corporation is committed to supply all Festo products and services that will meet or exceed our customers' requirements in product quality, delivery, customer service and satisfaction.

To meet this commitment, we strive to ensure a consistent, integrated, and systematic approach to management that will meet or exceed the requirements of the ISO 9001 standard for Quality Management and the ISO 14001 standard for Environmental Management.

9001: CERTCC5-16248-2006-AQ-ESN-TGA
ISO 9001
ISO 14001
DNV
Certified Company
14001: CERTCC5-16248A-2006-AQ-ESN-TGA

FSC
Printed on recycled paper at New Horizon Graphic, Inc., FSC certified as an environmentally friendly printing plant.

Festo North America

United States

Customer Resource Center
502 Earth City Expy., Suite 125
Earth City, MO 63045

For ordering assistance, or to find
your nearest Festo Distributor,
Call: 1.800.99.FESTO
Fax: 1.800.96.FESTO
Email: customer.service@us.festo.com

For technical support,
Call: 1.866.GO.FESTO
Fax: 1.800.96.FESTO
Email: product.support@us.festo.com

Headquarters
Festo Corporation
395 Moreland Road
P.O. Box 18023
Hauppauge, NY 11788
www.festo.com/us

Sales Offices

Appleton
N. 922 Tower View Drive, Suite N
Greenville, WI 54942

Boston
120 Presidential Way, Suite 330
Woburn, MA 01801

Chicago
1441 East Business Center Drive
Mt. Prospect, IL 60056

Dallas
1825 Lakeway Drive, Suite 600
Lewisville, TX 75057

Detroit - Automotive Engineering Center
2601 Cambridge Court, Suite 320
Auburn Hills, MI 48326

New York
395 Moreland Road
Hauppauge, NY 11788

Silicon Valley
4935 Southfront Road, Suite F
Livermore, CA 94550

Design and Manufacturing Operations

East: 395 Moreland Road, Hauppauge, NY 11788

Central: 1441 East Business Center Drive, Mt. Prospect, IL 60056

West: 4935 Southfront Road, Suite F, Livermore, CA 94550

Mexico

Headquarters
Festo Pneumatic, S.A.
Av. Ceylán 3, Col. Tequesquinahuac
54020 Tlalnepantla, Edo. de México
Call: 011 52 [55] 53 21 66 00
Fax: 011 52 [55] 53 21 66 65
Email: festo.mexico@mx.festo.com
www.festo.com/mx

Canada

Headquarters
Festo Inc.
5300 Explorer Drive
Mississauga, Ontario L4W 5G4
Call: 1.905.624.9000
Fax: 1.905.624.9001
Email: info.ca@ca.festo.com
www.festo.com/ca

Festo Worldwide

Argentina Australia Austria Belarus Belgium Brazil Bulgaria Canada Chile China Colombia Croatia Czech Republic Denmark Estonia Finland France Germany Great Britain Greece Hong Kong Hungary India Indonesia Iran Ireland Israel Italy Japan Latvia Lithuania Malaysia Mexico Netherlands New Zealand Norway Peru Philippines Poland Romania Russia Serbia Singapore Slovakia Slovenia South Africa South Korea Spain Sweden Switzerland Taiwan Thailand Turkey Ukraine United States Venezuela

www.festo.com