Linear drives DGPI/DGPIL, with integrated displacement encoder

FESTO

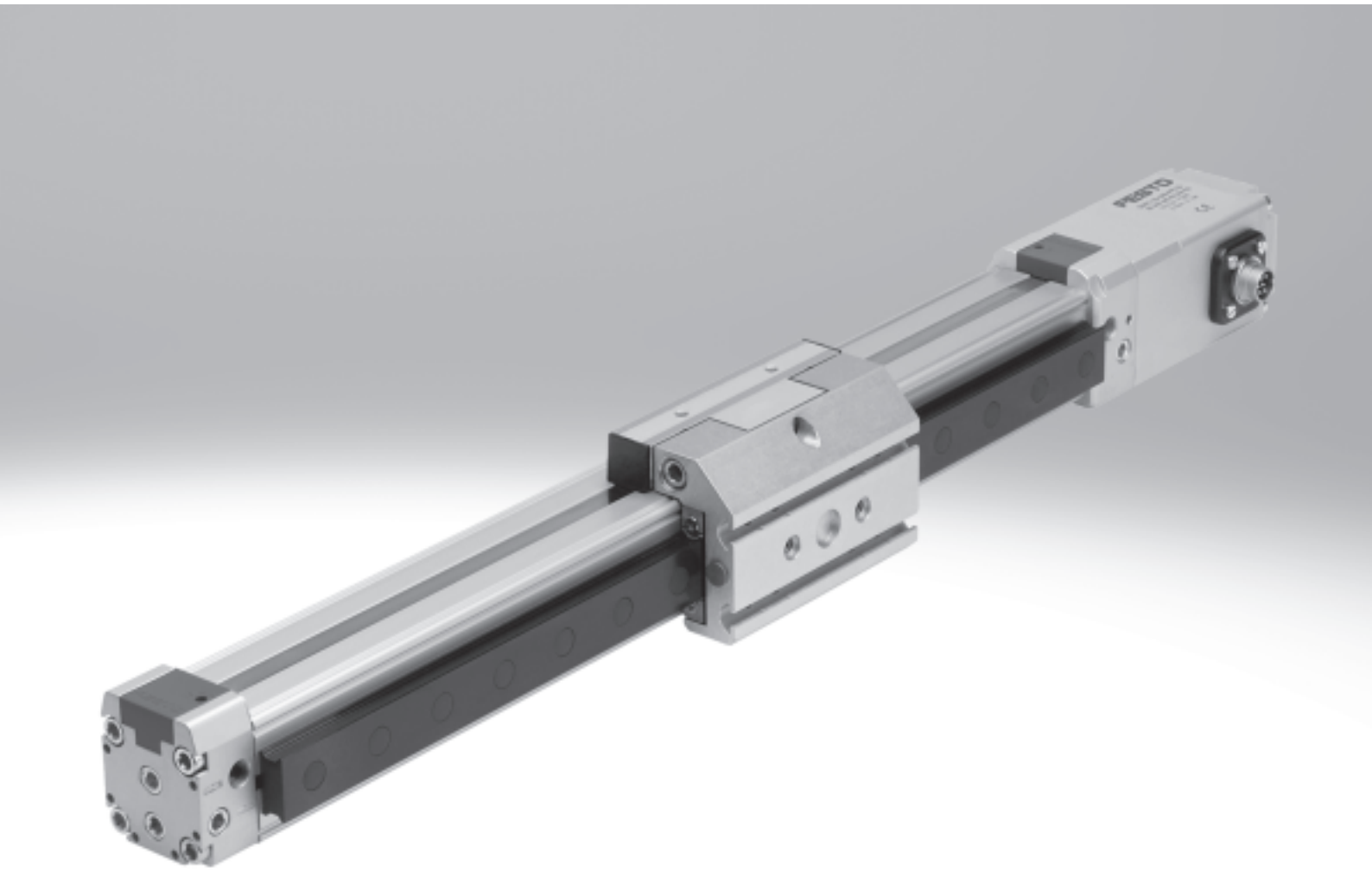

Cylinders with displacement encoder

Product range overview

Function	Type	Brief description
Drives	**Rodless**	
	DGCI 	• With guide • With contactless displacement encoder • Based on linear drive DGC • Supply ports optionally on end face or front • System product for handling and assembly technology
	DGPI/DGPIL 	**Do not use for new projects!** • With or without guide • With contactless displacement encoder, integrated • Wide range of options for mounting on drives • System product for handling and assembly technology
	DGP/DGPL 	**Do not use for new projects!** • With or without guide • With potentiometer or contactless displacement encoder, attached • With clamping unit • Wide range of options for mounting on drives
	With piston rod	
	DNCI 	• With contactless displacement encoder • Various piston rod variants • Standards-based cylinder to ISO 15552 ISO DIN VDMA
	DDPC 	• With contactless displacement encoder • Various piston rod variants • Standards-based cylinder to ISO 15552 ISO DIN VDMA
	DNC/DSBC 	• With attached potentiometer MLO-LWG • Various piston rod variants • Standards-based cylinder to ISO 15552 ISO DIN VDMA
Swivel module	**Swivel module**	
	DSMI 	• Based on swivel module DSM • Integrated rotary encoder • Compact design • Wide range of mounting options

Cylinders with displacement encoder

Product range overview

Piston ∅	Stroke/swivel angle [mm/°]	Suitable				
		For positioning with		For end-position controller		For use as a measuring cylinder
		CPX-CMAX	SPC200	CPX-CMPX	SPC11	
Rodless						
18, 25, 32, 40, 63	100; 160; 225; 300; 360; 450; 500; 600; 750; 850; 1,000; 1,250; 1,500; 1,750; 2,000	■	■	■	■	■
25, 32, 40, 50, 63	225; 300; 360; 450; 500; 600; 750; 1,000; 1,250; 1,500; 1,750; 2,000	■	■	■	■	■
25, 32, 40, 50, 63	225; 300; 360; 450; 500; 600; 750; 1,000; 1,250; 1,500; 1,750; 2,000	–	■	–	■	■
With piston rod						
32, 40, 50, 63	10 … 2,000	–	–	–	–	■
	100 … 750	■	■	■	■	–
80, 100	10 … 2,000	–	–	–	–	■
	100 … 750	■	■	■	■	–
32, 40, 50, 63, 80	100, 150, 225, 300, 360, 450, 600, 750	■	■	■	■	■
Swivel module						
25, 40, 63	270	■	■	■	■	■

Cylinders with displacement encoder

Key features

Servopneumatic drive technology

Positioning and Soft Stop applications as an integral component of the valve terminal CPX – the modular peripheral system for decentralised automation tasks.
The modular design means that valves, digital inputs and outputs, positioning modules and end-position controllers, as appropriate to the application, can be combined in almost any way on the CPX terminal.

Advantages:
- Pneumatics and electrics – control and positioning on one platform
- Innovative positioning technology – piston rod drives, rodless drives, rotary drives
- Actuation via fieldbus
- Remote maintenance, remote diagnostics, web server, SMS and e-mail alert are all possible via TCP/IP
- Modules can be quickly exchanged and expanded without altering the wiring

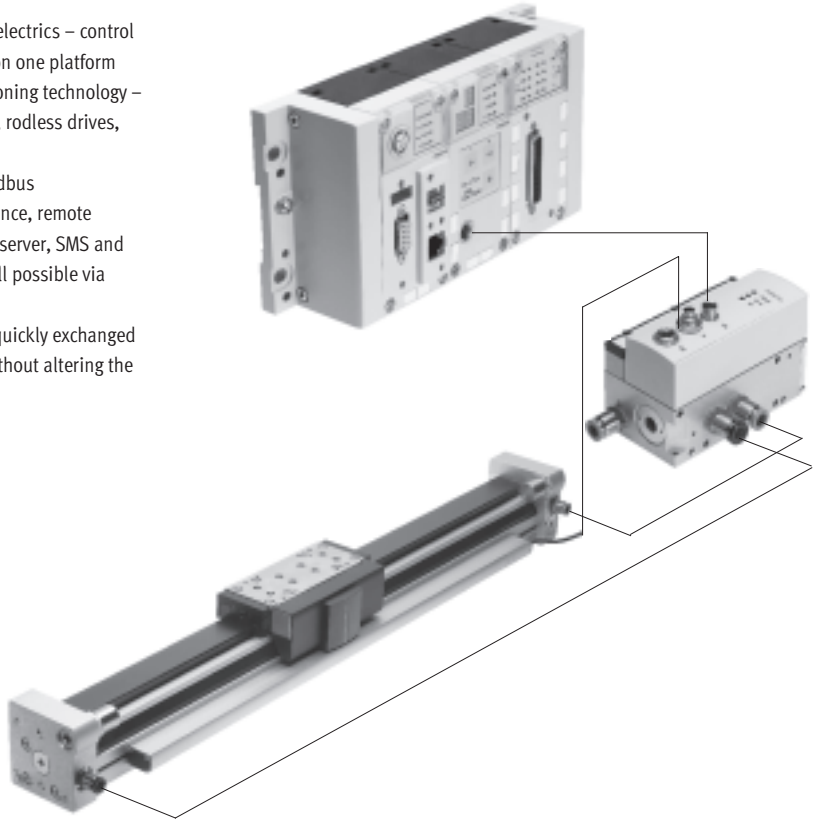

Axis controller CPX-CMAX

Technical data ➔ Internet: cpx-cmax

Free choice:
Position and force control, directly actuated or selected from one of 64 configurable position sets.
If you are looking for something more: the configurable function for switching to the next set enables simple functional sequences to be realised in the axis controller CPX-CMAX.
All stations are recognised as the auto-identification function identifies each station with its device data on the controller CPX-CMAX.

Also included:
The functional scope of the controller CPX-CMAX includes actuation of a brake or clamping unit via the proportional directional control valve VPWP.
Up to 8 modules (max. 8 axes) can be operated in parallel and independently of each other.
Commissioning via FCT (Festo configuration software) or via fieldbus: no programming, only configuration.

Advantages:
- Greater flexibility
- OEM friendly – commissioning also via fieldbus
- Easy installation and fast commissioning
- Cost-effective
- You program the system in your PLC environment

Cylinders with displacement encoder

Key features

End-position controller CPX-CMPX

Technical data ➔ Internet: cpx-cmpx

Fast travel between the mechanical end stops of the cylinder, stopping gently and without impact in the end position.
Fast commissioning via control panel, fieldbus or handheld unit.
Improved downtime control.
Actuation of a brake or clamping unit via the proportional directional control valve VPWP is an integral part of the controller CMPX.

Depending on the fieldbus chosen, up to 9 end-position controllers can be actuated on the CPX terminal.
All system data can be read and written via the fieldbus, including, for example, the mid positions.

Advantages:
- Greater flexibility
- OEM friendly – commissioning also via fieldbus
- Easy installation and fast commissioning
- Cost-effective
  - Up to 30% faster cycle rates
  - Significantly reduced system vibration
- Improved work ergonomics thanks to significantly reduced noise level
- The extended diagnostics help to reduce the service time for the machine

Proportional directional control valve VPWP

Technical data ➔ Internet: vpwp

The 5/3-way proportional directional control valve for applications with Soft Stop and pneumatic positioning.
Fully digitalised – with integrated pressure sensors, with new diagnostic functions.
In sizes 4, 6, 8 and 10.
Flow rate of 350, 700, 1,400 and 2,000 l/min.

With switching output for actuating a brake.
Coloured supply ports.
Pre-assembled cables guarantee faultless and fast connection with the controllers CPX-CMPX and CPX-CMAX.

Advantages:
- Easy installation and fast commissioning
- Reduction of system downtimes thanks to the new diagnostic options
- With switching output for actuating a brake/clamping unit

Measuring module CPX-CMIX

Technical data ➔ Internet: cpx-cmix

Fully digital data acquisition and transmission means pneumatic cylinders can be used as sensors.
With very high repetition accuracy and incorporating both analogue and digital measuring sensors.

Suitable for the linear drive DGCI with displacement encoder for measuring absolute values, for the piston rod drive DNCI/DDPC with incremental displacement encoder or even for a potentiometer of the type MLO.

Advantages:
- All process steps can be documented, which improves quality
- An adjustable contact force (via pressure regulator) increases the precision of the "displacement sensor"
- With displacement encoders for measuring absolute values, the actual position is immediately available after the system is switched on

Cylinders with displacement encoder

Drive options

System with linear drive DDLI, DGCI

Technical data ➔ Internet: dgci

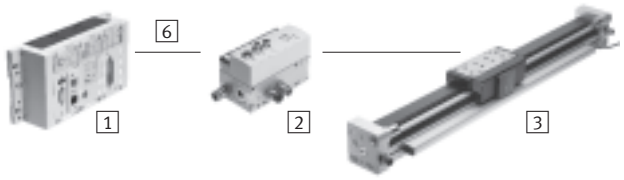

1 Controller module CPX-CMPX or CPX-CMAX
2 Proportional directional control valve VPWP
3 Linear drive DDLI, DGCI with displacement encoder
6 Connecting cable KVI-CP-3-...

- Pneumatic rodless linear drive with displacement encoder, with or without recirculating ball bearing guide
- Displacement encoder with absolute and contactless measuring
- Identical design to pneumatic linear drive DGC
- Diameter: 18 ... 40 and 63 mm
- Stroke: 100 ... 2,000 mm in fixed lengths
- Range of applications: Soft Stop and pneumatic positioning
- Loads from 1 ... 180 kg
- No sensor interface required

Advantages:
- Complete drive unit
- DDLI for easy connection to customer's guide system
- Excellent running characteristics
- For fast and accurate positioning down to ±0.2 mm (only with axis controller CPX-CMAX)

System with linear drive DGPI, DGPIL or displacement encoder MME-MTS

Technical data ➔ Internet: dgpi

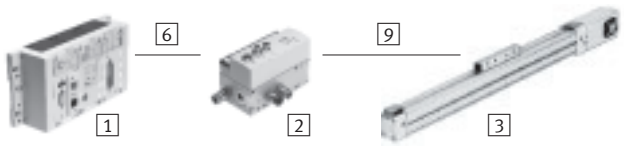

1 Controller module CPX-CMPX or CPX-CMAX
2 Proportional directional control valve VPWP
3 Linear drive DGPI, DGPIL with displacement encoder
6 Connecting cable KVI-CP-3-...
9 NEBP-M16W6-K-2-M9W5

- Pneumatic rodless linear drive with displacement encoder, with or without recirculating ball bearing guide
- Displacement encoder with absolute and contactless measuring
- Diameter: 25 ... 63 mm
- Stroke: 225 ... 2,000 mm in fixed lengths
- Range of applications: Soft Stop and pneumatic positioning
- Loads from 2 ... 180 kg
- No sensor interface required

Advantages:
- Complete drive unit
- DGPI for easy connection to customer's guide system
- Excellent running characteristics
- For fast and accurate positioning down to ±0.2 mm (only with axis controller CPX-CMAX)

System with standard cylinder DNCI, DDPC

Technical data ➔ Internet: dnci

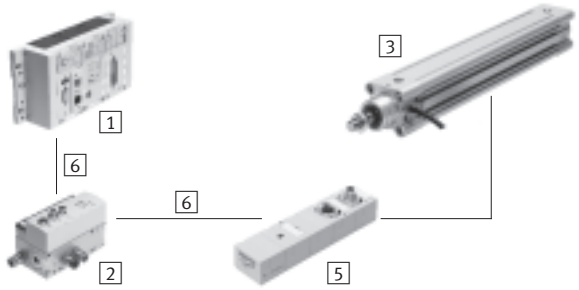

1 Controller module CPX-CMPX or CPX-CMAX
2 Proportional directional control valve VPWP
3 Standard cylinder DNCI, DDPC with displacement encoder
5 Sensor interface CASM-S-D3-R7
6 Connecting cable KVI-CP-3-...

- Standard cylinder with integrated displacement encoder, conforms to DIN ISO 6432, VDMA 24 562, NF E 49 003.1 and Uni 10 290
- Displacement encoder with contactless and incremental measuring
- Diameter: 32 ... 100 mm
- Stroke: 100 ... 750 mm
- Range of applications: Soft Stop and pneumatic positioning
- Loads from 3 ... 450 kg and a matching sensor interface CASM-S-D3-R7
- Pre-assembled cables guarantee faultless and fast electrical connection

Advantages:
- Compact drive unit
- Can be used universally
- Also with guide unit
- For fast and accurate positioning down to ±0.5 mm (only with axis controller CPX-CMAX)

Cylinders with displacement encoder

Drive options

System with swivel module DSMI

Technical data ➔ Internet: dsmi

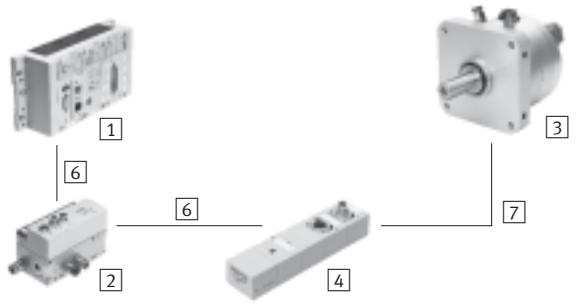

1 Controller module CPX-CMPX or CPX-CMAX
2 Proportional directional control valve VPWP
3 Swivel module DSMI with displacement encoder
4 Sensor interface CASM-S-D2-R3
6 Connecting cable KVI-CP-3-...
7 Connecting cable NEBC-P1W4-K-0,3-N-M12G5

- Swivel module DSMI with integrated displacement encoder
- Identical design to pneumatic swivel module DSM
- Absolute displacement encoder on basis of potentiometer
- Swivel range from 0 ... 270°
- Size: 25, 40, 63
- Max. torque: 5 ... 40 Nm
- Range of applications: Soft Stop and pneumatic positioning
- Mass moments of inertia from 15 ... 6,000 kgcm^2 and a matching sensor interface CASM-S-D2-R3
- Pre-assembled cables guarantee faultless and fast connection with the proportional directional control valve VPWP

Advantages:

- Complete drive unit, compact, can be used immediately
- High angular acceleration
- With adjustable fixed stops
- For fast and accurate positioning down to ±0.2° (only with axis controller CPX-CMAX)

System with potentiometer

Technical data ➔ Internet: casm

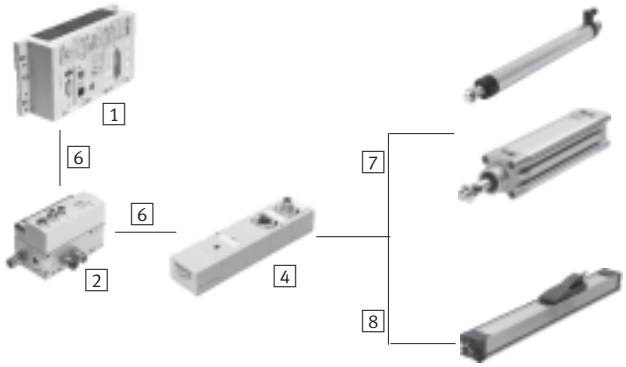

1 Controller module CPX-CMPX or CPX-CMAX
2 Proportional directional control valve VPWP
4 Sensor interface CASM-S-D2-R3
6 Connecting cable KVI-CP-3-...
7 Connecting cable NEBC-P1W4-K-0,3-N-M12G5
8 Connecting cable NEBC-A1W3-K-0,4-N-M12G5

- Attachable potentiometers with absolute measurement, with high degree of protection
- With connecting rod or moment compensator
- Measuring range: 100 ... 2,000 mm
- Pre-assembled cables guarantee faultless and fast connection with the sensor interface CASM
- Range of applications: Soft Stop and pneumatic positioning with cylinder ∅ 25 ... 80 mm, e.g. DNC or DSBC
- Loads from 1 ... 300 kg

Advantages:

- Easy installation and fast commissioning
- Cost-effective
- Can also be used in harsh environmental conditions
- Variety of drives: CPX-CMPX and CPX-CMAX also support cylinders with external displacement encoder

Cylinders with displacement encoder

Drive options

System components for Soft Stop systems with end-position controller CPX-CMPX							
3	Linear drive		Standard cylinder	Swivel module	Displacement encoder		➔ Page/ Internet
	DDLI/DGCI	DGPI	DNCI, DDPC	DSMI	MLO-LWG/-TLF	MME-MTS	
1 End-position controller CPX-CMPX	■	■	■	■	■	■	cmpx
2 Prop. directional control valve VPWP	■	■	■	■	■	■	vpwp
4 Sensor interface CASM-S-D2-R3	–	–	–	■	■	–	casm
5 Sensor interface CASM-S-D3-R7	–	–	■	–	–	–	casm
6 Connecting cable KVI-CP-3-...	■	■	■	■	■	■	kvi
7 Connecting cable NEBC-P1W4-...	–	–	–	■	■ / –	–	nebc
8 Connecting cable NEBC-A1W3-...	–	–	–	–	– / ■	–	nebc
9 Connecting cable NEBP-M16W6-...	–	■	–	–	–	■	nebp

System components for pneumatic positioning systems with axis controller CPX-CMAX							
3	Linear drive		Standard cylinder	Swivel module	Displacement encoder		➔ Page/ Internet
	DDLI/DGCI	DGPI	DNCI, DDPC	DSMI	MLO-LWG/-TLF	MME-MTS	
1 Axis controller CPX-CMAX	■	■	■	■	■	■	cmax
2 Prop. directional control valve VPWP	■	■	■	■	■	■	vpwp
4 Sensor interface CASM-S-D2-R3	–	–	–	■	■	–	casm
5 Sensor interface CASM-S-D3-R7	–	–	■	–	–	–	casm
6 Connecting cable KVI-CP-3-...	■	■	■	■	■	■	kvi
7 Connecting cable NEBC-P1W4-...	–	–	–	■	■ / –	–	nebc
8 Connecting cable NEBC-A1W3-...	–	–	–	–	– / ■	–	nebc
9 Connecting cable NEBP-M16W6-...	–	■	–	–	–	■	nebp

System components for measuring cylinders with measuring module CPX-CMIX							
	Linear drive		Standard cylinder	Swivel module	Displacement encoder		➔ Page/ Internet
	DDLI/DGCI	DGPI	DNCI, DDPC	DSMI	MLO-LWG/-TLF	MME-MTS	
Measuring module CPX-CMIX-M1-1	■	■	■	■	■	■	cmix
Sensor interface CASM-S-D2-R3	–	–	–	■	■	–	casm
Sensor interface CASM-S-D3-R7	–	–	■	–	–	–	casm
Connecting cable KVI-CP-3-...	(■)	(■)	■	■	■	(■)	kvi
Connecting cable NEBC-P1W4-...	–	–	–	■	■ / –	–	nebc
Connecting cable NEBC-A1W3-...	–	–	–	–	– / ■	–	nebc
Connecting cable NEBP-M16W6-...	–	■	–	–	–	■	nebp

Cylinders with displacement encoder

Overview

Individual components for positioning
With axis controller SPC200
➔ Internet: spc200

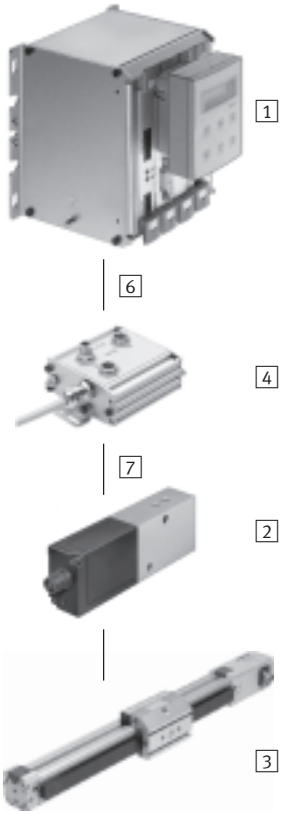

1 Axis controller SPC200
2 Proportional directional control valve MPYE
3 Linear drive DGPI, DGPIL
4 Axis interface SPC-AIF-MTS
6 Connecting cable KSPC-AIF-...
7 Connecting cable KMPYE-AIF-...

With end-position controller SPC11
➔ Internet: spc11

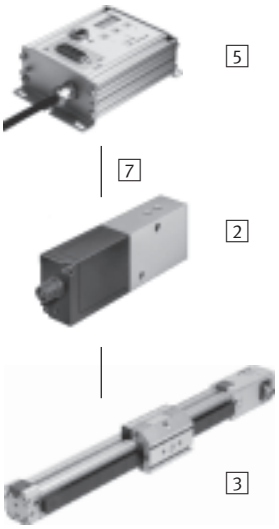

2 Proportional directional control valve MPYE
3 Linear drive DGPI, DGPIL
5 End-position controller SPC11-MTS-AIF
7 Connecting cable KMPYE-AIF-...

DGPI, without guide **10**

- Piston ∅ 25 ... 63 mm
- Stroke 225 ... 2,000 mm
- Standard moment compensator
- Low characteristic load values
- Supply ports on both sides

DGPIL, with recirculating ball bearing guide **24**

- Piston ∅ 25 ... 63 mm
- Stroke 225 ... 2,000 mm
- Standard slide
- High characteristic load values
- Supply ports on both sides

Linear drives DGPI, with integrated displacement encoder

Peripherals overview

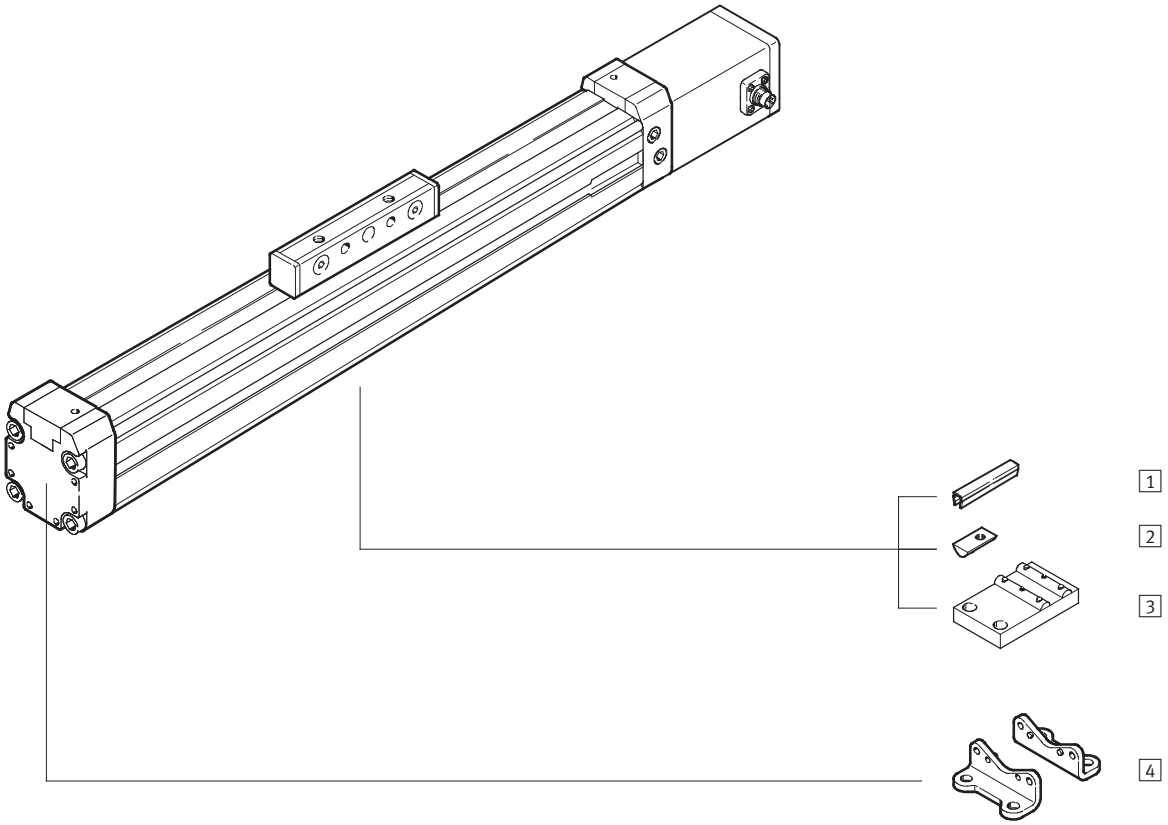

Variants and accessories			
	Type	Brief description	➔ Page/Internet
1	Slot cover B/S	For protecting against the ingress of dirt	41
2	Slot nut Y	For mounting attachments	41
3	Central support M	For mounting the axis	38
4	Foot mounting F	For mounting the axis	38

Linear drives DGPI, with integrated displacement encoder

Type codes

DGPI	–	25	–	500	–	PPV	–	AIF	–	GK	–	AV	–	D2	–	4BYF

Type	
DGPI	Linear drive

Piston ∅ [mm]

Stroke [mm]

Cushioning	
PPV	Adjustable at both ends

Displacement encoder	
AIF	CAN axis interface

Basic design	
GK	Standard slide

Connection position for displacement encoder and compressed air	
AH	Connections at rear
AU	Connections underneath
AV	Connections at front

Supply port	
D2	Supply port at both ends

Accessories enclosed separately	
...S	Slot cover for sensor slot
...B	Slot cover for mounting slot
...Y	Slot nut for mounting slot
...M	Central support
...F	Foot mounting

Do not use for new designs!
Type discontinued

Linear drives DGPI, with integrated displacement encoder

Technical data

Function

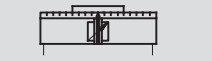

25 … 63 mm

225 … 2,000 mm

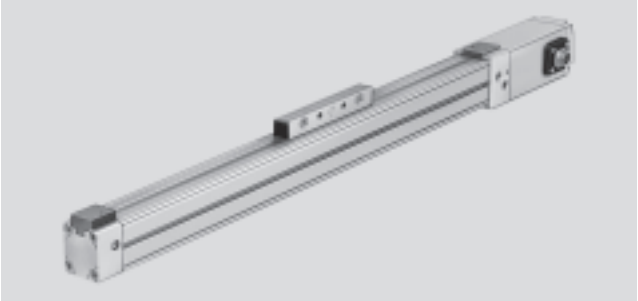

General technical data					
Piston ∅	25	32	40	50	63
Design	Piston				
	Moment compensator				
	Profile barrel				
Mode of operation	Double-acting				
Operating medium[1]	Compressed air according to ISO 8573-1:2010 [6:4:4]				
Note about the operating/pilot medium	Lubricated operation not possible Pressure dew point 10 °C below ambient temperature/temperature of medium				
Cushioning	Adjustable at both ends				
Cushioning length [mm]	18	20	30		
Position sensing	Integrated displacement encoder				
Measuring principle	Digital, magnetostrictive, non-contacting and absolute measurement				
Type of mounting	Foot mounting				
Stroke[2)3)] [mm]	225; 300; 360; 450; 500; 600; 750; 1,000; 1,250; 1,500; 1,750; 2,000				
Pneumatic connection	G⅛		G¼		G⅜
Electrical connection	6-pin round plug to DIN 45322				

1) The proportional directional control valve MPYE used requires the characteristic values.
2) Note stroke reduction in combination with SPC200.
3) Supply of compressed air to each end of the cylinder (feature D2) is absolutely essential for Soft Stop SPC11 and axis controller SPC200 as of a length of 500 mm.

Forces [N] and impact energy [Nm]					
Piston ∅	25	32	40	50	63
Theoretical force at 6 bar	295	483	754	1,178	1,870
Max. impact energy in the end positions[1]	0.1	0.2	0.4	0.8	0.8

1) Cushioning PPV must be completely open for applications with Soft Stop SPC11 and axis controller SPC200.

Permissible impact velocity:

$$v_{perm.} = \sqrt{\frac{2 \times E_{perm.}}{m_{dead} + m_{load}}}$$

Maximum permissible load:

$$m_{load} = \frac{2 \times E_{perm.}}{v^2} - m_{dead}$$

$v_{perm.}$ Permissible impact velocity
$E_{perm.}$ Maximum impact energy
m_{dead} Moving mass (drive)
m_{load} Moving effective load

Note

These specifications represent the maximum values that can be achieved. Note the maximum permissible impact energy.

Linear drives DGPI, with integrated displacement encoder

Technical data

Positioning characteristics with axis controller SPC200						
Piston ∅		25	32	40	50	63
Repetition accuracy	[mm]	➔ 14				
Mounting position		Any				
Minimum load, horizontal[1]	[kg]	2	3	5	8	12
Maximum load, horizontal[1]	[kg]	30	45	75	120	180
Minimum load, vertical[1]	[kg]	2	3	5	8	12
Maximum load, vertical[1]	[kg]	10	15	25	40	60
Minimum travel speed	[m/s]	0.05				
Maximum travel speed	[m/s]	3				
Typical positioning time, long stroke[2]	[s]	0.75/1.20	0.85/1.20	0.75/1.20	0.95/1.25	0.90/1.20
Typical positioning time, short stroke[3]	[s]	0.40/0.60	0.45/0.60	0.40/0.60	0.50/0.65	0.50/0.65
Minimum positioning stroke[4]	[%]	3				
Stroke reduction[5]	[mm]	25		35		
Recommended proportional directional control valve		➔ 42				

1) Load = effective load + mass of all moving parts on the drive
2) At 6 bar, horizontal mounting position, DGPL-XX-1250, 1,000 mm travel at min./max. load
3) At 6 bar, horizontal mounting position, DNCM-XX-1250, 100 mm travel at min./max. load
4) In relation to the maximum stroke of the drive, but never more than 20 mm
5) The stroke reduction must be maintained on each side of the drive, the max. positionable stroke is therefore: stroke – 2x stroke reduction

Positioning characteristics with end-position controller SPC11						
Piston ∅		25	32	40	50	63
Repetition accuracy of a mid-position[1]	[mm]	±2				
Mounting position		Any				
Minimum load, horizontal[2]	[kg]	2	3	5	8	12
Maximum load, horizontal[2]	[kg]	30	45	75	120	180
Minimum load, vertical[2]	[kg]	2	3	5	8	12
Maximum load, vertical[2]	[kg]	10	15	25	40	60
Travel time	[s]	➔ SoftStop sizing software: ➔ www.festo.com				
Recommended proportional directional control valve		➔ 42				

1) In the stroke range from 225 … 2,000 mm
2) Load = effective load + mass of all moving parts on the drive

Operating and environmental conditions						
Piston ∅		25	32	40	50	63
Operating pressure[1]	[bar]	4 … 8				
Ambient temperature	[°C]	–10 … +60				
Vibration resistance		To DIN/IEC 68 Parts 2 – 6, severity level 1				
Continuous shock resistance		To DIN/IEC 68 Parts 2 – 27, severity level 1				
CE marking (see declaration of conformity)		To EU EMC Directive				
Protection class (displacement encoder)		IP65 to IEC 60 529				
Corrosion resistance class CRC[2]		1				

1) Only applies to applications with Soft Stop SPC11 and axis controller SPC200
2) Corrosion resistance class 1 according to Festo standard 940 070
Components subject to low corrosion stress. Transport and storage protection. Parts that do not have primarily decorative surface requirements, e.g. in internal areas that are not visible or behind covers.

Weight [g]					
Piston ∅	25	32	40	50	63
Basic weight	1,540	2,150	3,500	6,980	10,600
Additional weight per 10 mm stroke	38	43	59	130	168
Moving load	180	314	551	1,045	1,775

Linear drives DGPI, with integrated displacement encoder

Technical data

Electrical data – Displacement encoder			
Power supply		[V DC]	24 (–15/+25%)
Maximum current consumption		[mA]	90
Resolution		[mm]	≤ 0.01
Independent linearity[1]	Maximum	[%]	0.02
Temperature coefficient		[ppm/°K]	≤ 15
Interface			Digital, CAN with protocol: SPC-AIF

1) Minimum ±50 µm

Materials

Sectional view

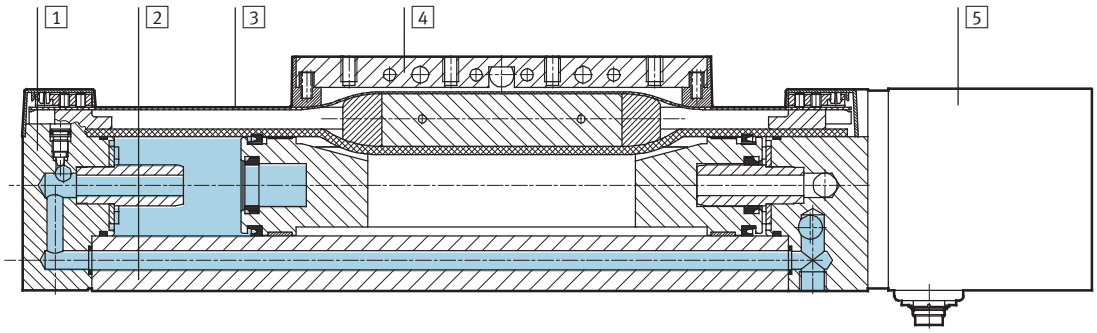

Drive		
1	End cap	Anodised aluminium
2	Profile	Anodised aluminium
3	Cover strip	Corrosion-resistant steel
4	Moment compensator	Anodised aluminium
5	Displacement encoder housing	Anodised aluminium
–	Seals	Nitrile rubber, polyurethane

Note

More technical data
➔ Internet: dpgl

Repetition accuracy

Tolerance t [mm] as a function of stroke l [mm]

Horizontal

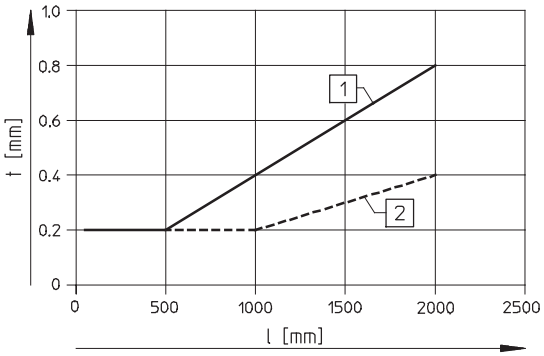

Vertical

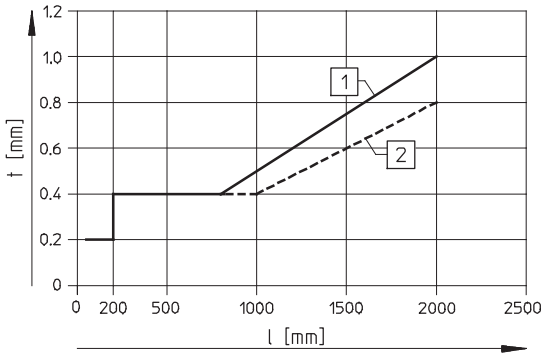

1 With analogue displacement encoder
2 With digital displacement encoder

Linear drives DGPI, with integrated displacement encoder

Technical data

FESTO

Characteristic load values

The indicated forces and torques refer to the centre line of the internal diameter of the profile barrel. These values must not be exceeded during dynamic operation. Special attention must be paid to the deceleration phase.

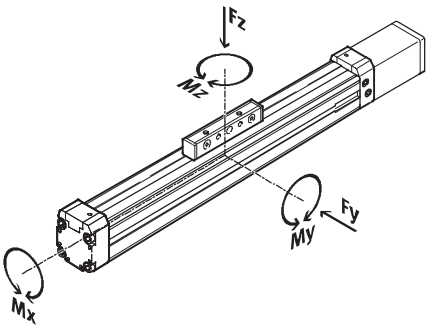

If the drive is simultaneously subjected to several of the indicated forces and torques, the following equation must be satisfied in addition to the indicated maximum loads:

$$0,4 \times \frac{Fz}{Fz_{max.}} + \frac{Mx}{Mx_{max.}} + \frac{My}{My_{max.}} + 0,2 \times \frac{Mz}{Mz_{max.}} \leq 1$$

$$\frac{Fz}{Fz_{max.}} \leq 1 \qquad \frac{Mz}{Mz_{max.}} \leq 1$$

Permissible forces and torques						
Piston ∅		25	32	40	50	63
$Fy_{max.}$	[N]	–	–	–	–	–
$Fz_{max.}$	[N]	330	480	800	1,200	1,600
$Mx_{max.}$	[Nm]	1	2	4	7	8
$My_{max.}$	[Nm]	20	40	60	120	120
$Mz_{max.}$	[Nm]	3	5	8	15	24

Maximum permissible support span l as a function of force F

The axis may need to be supported with central supports MUP in order to limit deflection in the case of large strokes. The following graphs can be used to determine the maximum permissible support span l as a function of force F acting on the axis.

Force on the surface of the slide

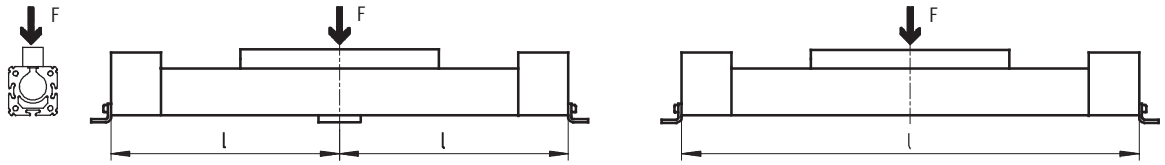

Maximum support span l (without central support) as a function of force F

Piston ∅ 25 … 40

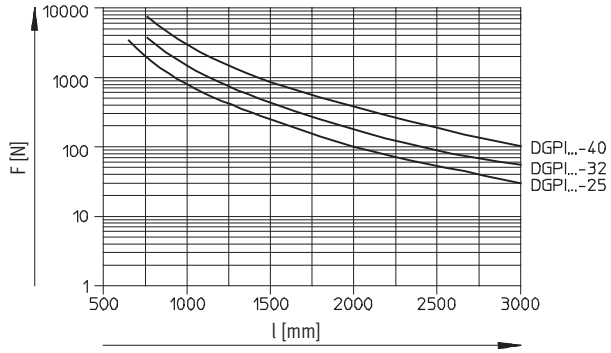

Piston ∅ 50/63

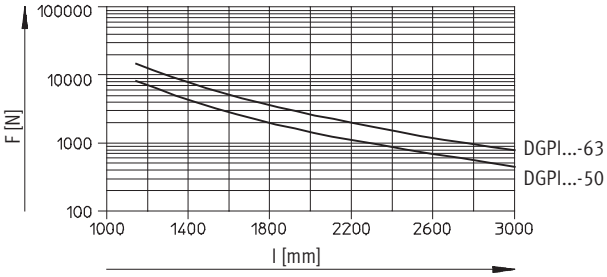

Linear drives DGPI, with integrated displacement encoder

Technical data

Dimensions Download CAD data ➔ **www.festo.com**

Standard moment compensator GK

Piston ∅ 25

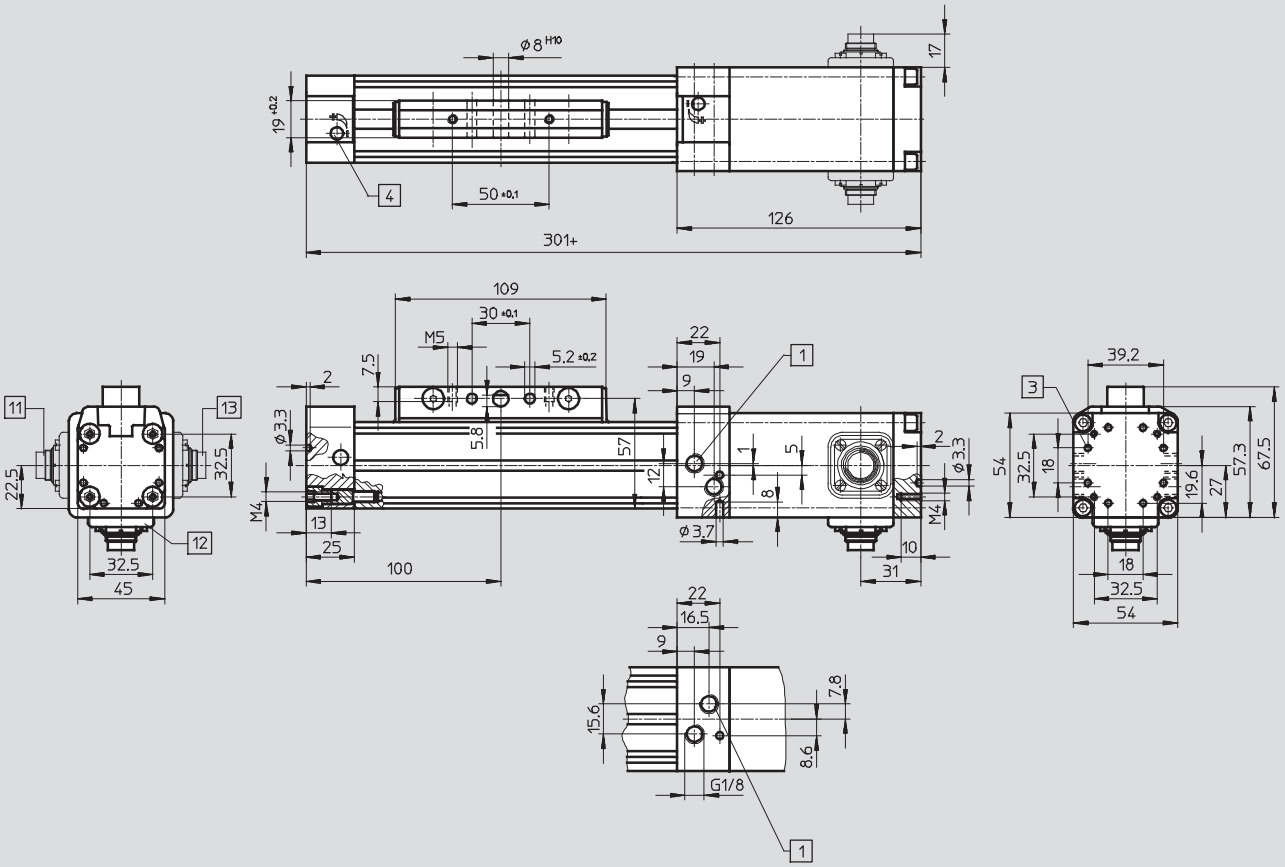

1 Supply ports can optionally be used on three sides on the right-hand end cap

3 Mounting hole for foot mounting HP

4 Regulating screw for adjustable end-position cushioning

11 Connection at rear

12 Connection underneath

13 Connection at front

\+ = plus stroke length

Linear drives DGPI, with integrated displacement encoder

Technical data

Dimensions Download CAD data ➔ **www.festo.com**

Supply port at both ends D2

Piston ∅ 25

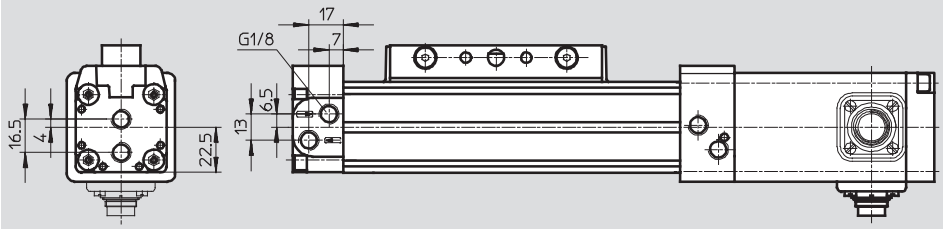

Profile barrel

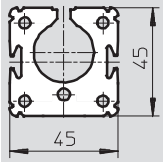

Linear drives DGPI, with integrated displacement encoder

Technical data

Dimensions Download CAD data ➔ **www.festo.com**

Standard moment compensator GK

Piston ∅ 32 … 63

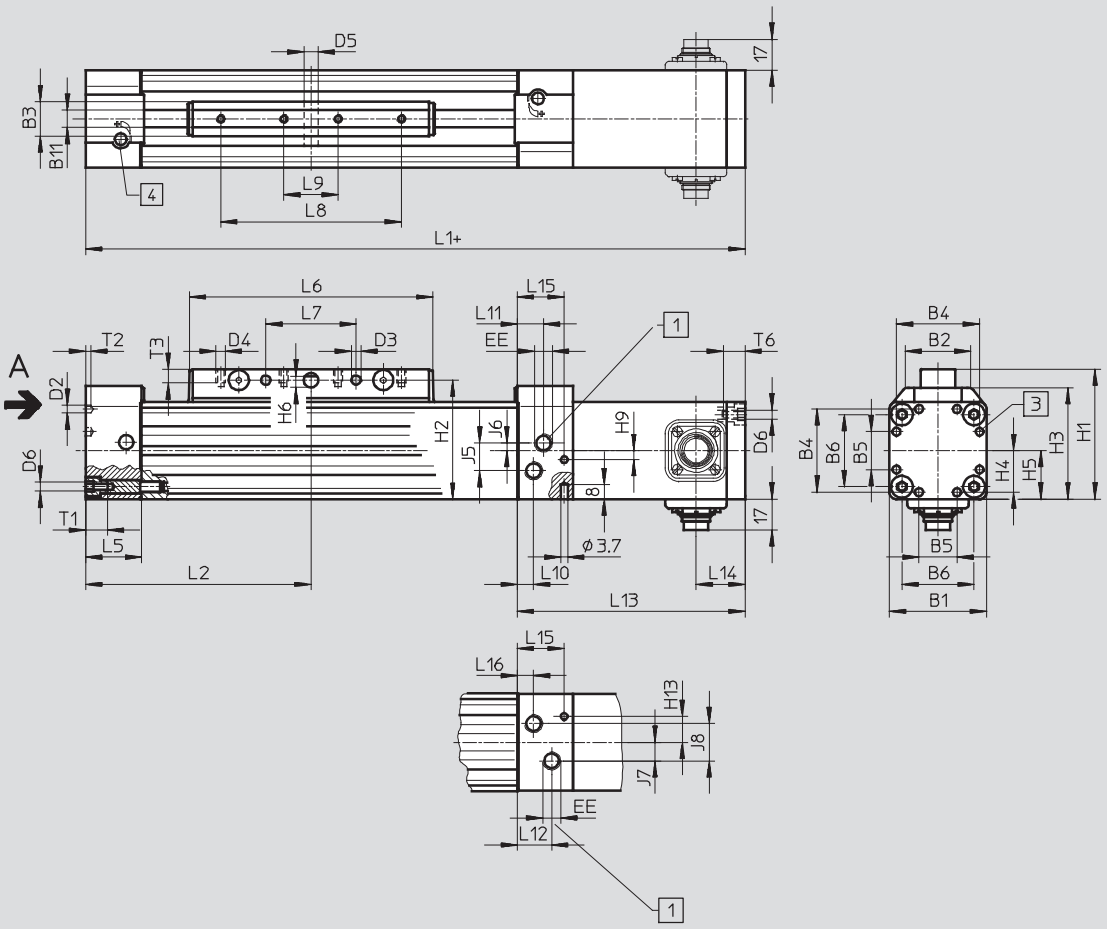

1	Supply ports can optionally be used on three sides on the right-hand end cap	4	Regulating screw for adjustable end-position cushioning
3	Mounting hole for foot mounting HP	11	Connection at rear
		12	Connection underneath
		13	Connection at front

+ = plus stroke length

View A

Piston ∅ 32/40

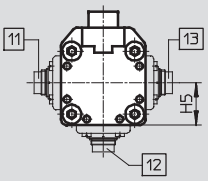

Piston ∅ 50

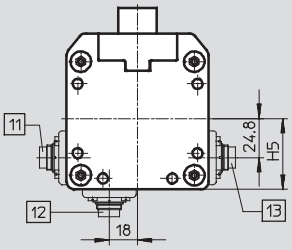

Piston ∅ 63

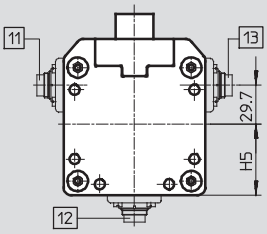

Supply port at both ends D2

Piston ∅ 32 … 63

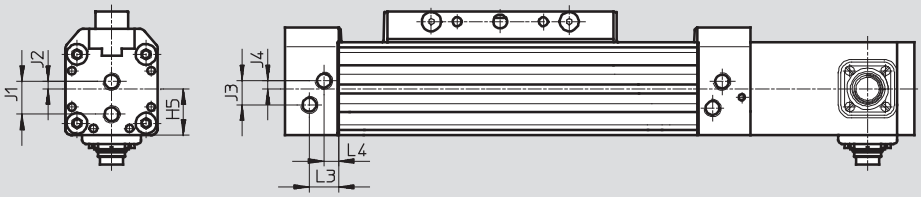

Linear drives DGPI, with integrated displacement encoder

Technical data

Dimensions Download CAD data ➔ **www.festo.com**

Profile barrel

Piston ∅ 32 **Piston ∅ 40** **Piston ∅ 50** **Piston ∅ 63**

6 Mounting slot for slot nuts NST

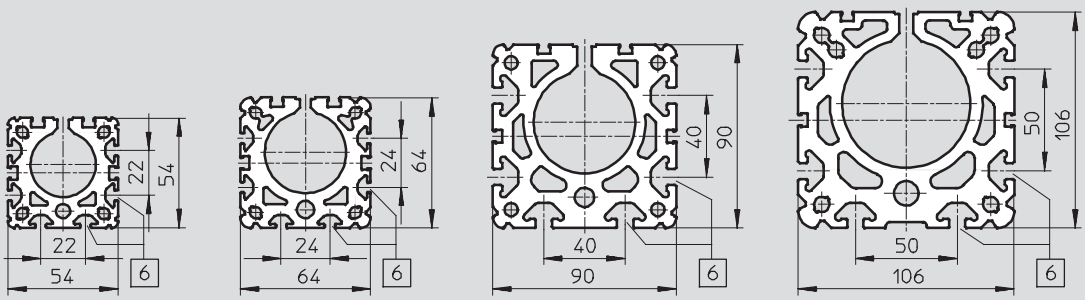

∅ [mm]	B1	B2	B3 +0.2	B4	B5	B6	B11	D2 ∅	D3 ∅ +0.2	D4	D5 ∅ H10	D6
32	54	35.8	19	46	21	40	9.5	4.3	5.2	M5	8	M5
40	64	45.7	21	53	28	49	9.5	4.3	6.5	M6	10	M5
50	90	69.2	24	76	44	72	12	6.3	8.5	M8	12	M6
63	106	84.8	24	89	44	83	12	6.3	8.5	M8	12	M8

∅ [mm]	EE	H1	H2	H3	H4	H5	H6	H9	H13	J1	J2	J3
32	G⅛	72	66	62	23	27	5.8	5	10.3	19	4.2	14
40	G¼	86	78	71.8	26.5	32	7.7	5	12.75	22	5	21
50	G¼	115	106	99	36	45	9.7	21.8	16.6	31.8	6.8	29.3
63	G⅜	131	122	115	44.5	53	9.7	–28	30	36	8	31

∅ [mm]	J4	J5	J6	J7	J8	L1	L2	L3	L4	L5	L6	L7 ±0.1
32	4.7	15.4	4.2	10.3	20.6	345	125	17	8.5	31	135	50
40	9.1	23	9.1	12.75	25.5	397	150	11.5	11.5	31	171	70
50	6	20.6	6.8	21	21	465	175	14	14	34	206	80
63	14	27	8	25	25	513	200	14	14	34	234	110

∅ [mm]	L8 ±0.1	L9 ±0.1	L10	L11	L12	L13	L14	L15	L16	T1	T2	T3	T6
32	100	30	17	8.5	19	126	27	26	9	13.2	3	7.5	12
40	130	40	10.8	16.5	21	128	29	26	10.8	13.2	4	10.5	12
50	150	50	10.8	18	22.8	149	80	25.2	12	15.2	6	12.5	15
63	190	70	14	24.5	31	147.5	68	16.5	16.5	21.2	6	12.5	20

Linear drives DGPI, with integrated displacement encoder

Ordering data – Modular products

Order code
Mandatory data/options

D2 Supply port at both ends
GK Standard slide

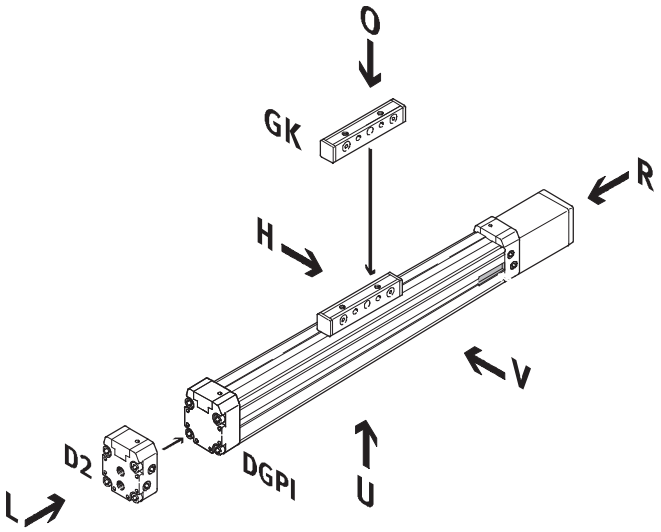

AV Displacement encoder connection at front
AH Displacement encoder connection at rear
AU Displacement encoder connection underneath

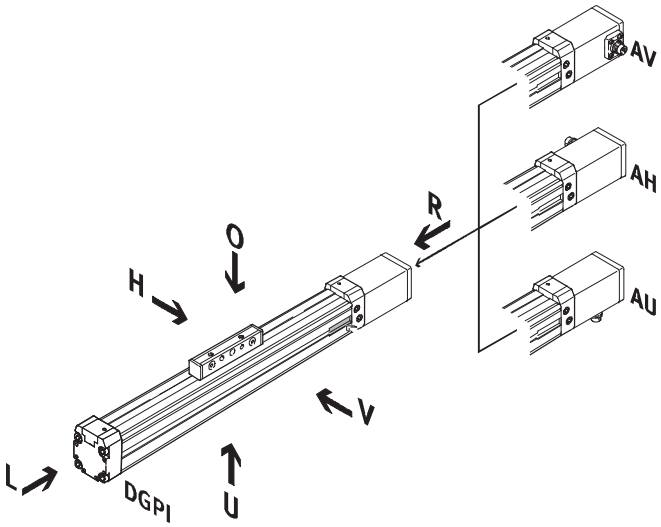

Linear drives DGPI, with integrated displacement encoder

Ordering data – Modular products

Order code
Options

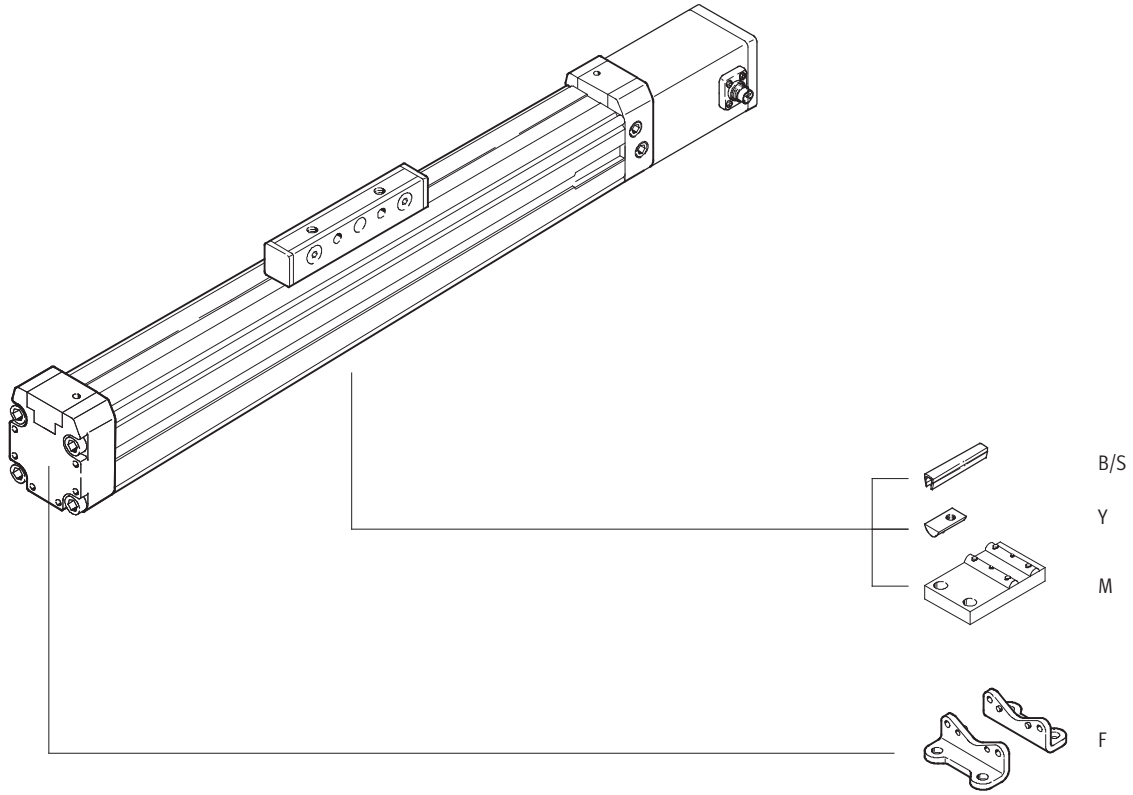

Do not use for new designs!
Type discontinued

Linear drives DGPI, with integrated displacement encoder

Ordering data – Modular products

FESTO

M Mandatory data

Module No.	Function	Size	Stroke	Cushioning	Displacement encoder	Basic design	Connection position for displacement encoder
175 134	DGPI	25	225 … 2,000	PPV	AIF	GK	AH
175 135		32					AU
175 136		40					AV
175 137		50					
175 138		63					
Ordering example							
175 138	**DGPI** –	**63** –	**750** –	**PPV** –	**AIF** –	**GK** –	**AV**

Ordering table

Size		25	32	40	50	63	Condi-tions	Code		Enter code
M	Module No.	**175 134**	**175 135**	**175 136**	**175 137**	**175 138**				
	Function	Pneumatic linear drive with integrated displacement encoder						**DGPI**		DGPI
	Size	25	32	40	50	63		**-...**		
	Stroke [mm]	225; 300; 360; 450; 500; 600; 750; 1,000; 1,250; 1,500; 1,750; 2,000						**-...**		
	Cushioning	Pneumatic cushioning, adjustable at both ends						**-PPV**		-PPV
	Displacement encoder	Temposonic with CAN axis interface						**-AIF**		-AIF
	Basic design	Standard piston/slide						**-GK**		-GK
	Connection position for displacement encoder AIF and compressed air	Connection position for displacement encoder and supply port, rear						**-AH**		
		Connection position for displacement encoder and supply port, underneath						**-AU**		
		Connection position for displacement encoder and supply port, front						**-AV**		

Transfer order code

	DGPI	–		–		–	**PPV**	–	**AIF**	–	**GK**	–	

Linear drives DGPI, with integrated displacement encoder

Ordering data – Modular products

FESTO

0 Options

Supply port	Accessories	Slot cover	Slot nut	Central support	Foot mounting
D2	ZUB	...S ...B	...Y	...M	...F
–	: ZUB	– 2B2S	10Y		F

Ordering table

Size		25	32	40	50	63	Conditions	Code		Enter code
Supply port		At both ends						-D2		
Accessories		Enclosed separately						:ZUB-		:ZUB-
Slot cover, 2 pcs., 0.5 m	Sensor slot	1 ... 10						...S		
	Mounting slot	–	1 ... 10					...B		
Slot nut	Mounting slot	–	1 ... 10					...Y		
Central support		1 ... 10						...M		
Foot mounting		1 ... 10						...F		

Transfer order code

–	: ZUB	–			

Linear drives DGPIL, with integrated displacement encoder

Peripherals overview

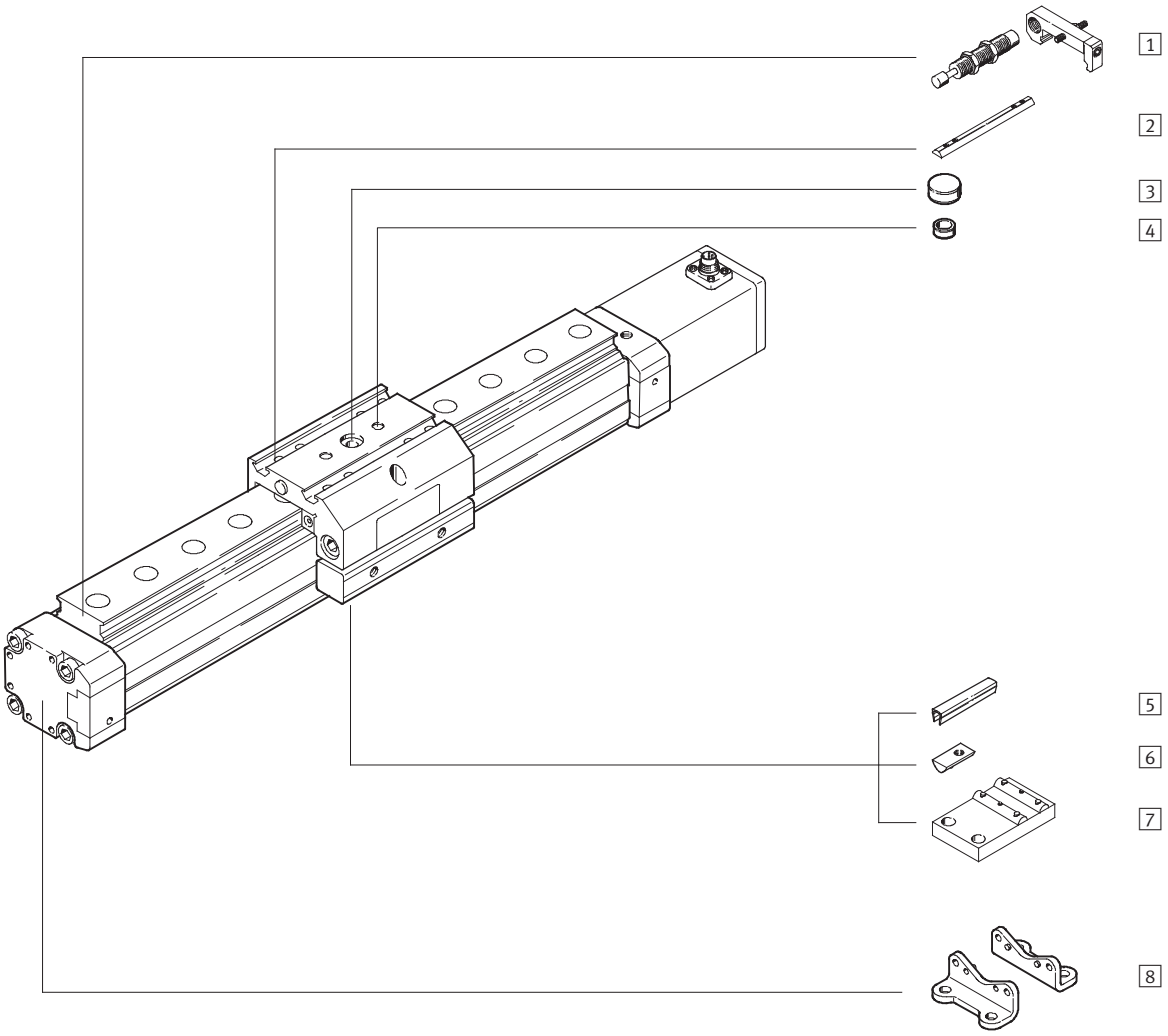

Linear drives DGPIL, with integrated displacement encoder

Peripherals overview

Variants and accessories			
	Type	Brief description	➔ Page/Internet
1	Shock absorber kit C/E	For avoiding damage at the end stop in the event of malfunction	40
2	Slot nut for slide X	For mounting loads and attachments on the slide	41
3	Central mounting Q	For centring loads and attachments on the slide	41
4	Centring sleeves Z	For centring loads and attachments on the slide	41
5	Slot cover B/S	For protecting against the ingress of dirt	41
6	Slot nut for mounting slot Y	For mounting attachments	41
7	Central support M	For mounting the axis	38
8	Foot mounting F	For mounting the axis	38

Linear drives DGPIL, with integrated displacement encoder

Type codes

DGPIL	–	25	–	500	–	PPV	–	B	–	KF	–	AIF	–	GK	–	AV	–	SV	–	D2	–	

Type	
DGPIL	Linear drive

Piston ∅ [mm]

Stroke [mm]

Cushioning	
PPV	Adjustable at both ends

Generation	
B	B series

Guide	
KF	Recirculating ball bearing guide

Displacement encoder	
AIF	CAN axis interface

Basic design	
GK	Standard slide

Connection position for displacement encoder and compressed air	
AH	Connections at rear
AU	Connections underneath
AV	Connections at front

Slide attachment position	
SH	Slide at rear
SV	Slide at front

Supply port	
D2	Supply port at both ends

Protected version	
GA	Protected version

Linear drives DGPIL, with integrated displacement encoder

Type codes

→	: ZUB	–	2S	2X	Z			F	2C

Accessories	
ZUB	Accessories enclosed separately

Slot cover	
...S	Sensor slot
...B	Mounting slot

Slot nut	
...X	For slide
...Y	For profile barrel

Centring sleeves	
...Z	For slide

Central mounting	
...Q	For slide

Central support	
...M	Central support

Foot mounting	
...F	Foot mounting

Shock absorber kit	
...C	Plus retainer for GK/GV
...E	For protected version

Do not use for new designs!
Type discontinued

Linear drives DGPIL, with integrated displacement encoder

Technical data

Function

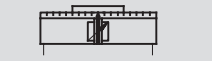

25 ... 63 mm

225 ... 2,000 mm

General technical data					
Piston ∅	25	32	40	50	63
Design	Piston				
	Moment compensator				
	Profile barrel				
Mode of operation	Double-acting				
Operating medium[1]	Compressed air according to ISO 8573-1:2010 [6:4:4]				
Note about the operating/pilot medium	Lubricated operation not possible Pressure dew point 10 °C below ambient temperature/temperature of medium				
Cushioning	Adjustable at both ends				
Cushioning length [mm]	18	20	30		
Position sensing	Integrated displacement encoder				
Measuring principle	Digital, magnetostrictive, non-contacting and absolute measurement				
Type of mounting	Foot mounting				
Stroke[2][3] [mm]	225; 300; 360; 450; 500; 600; 750; 1,000; 1,250; 1,500; 1,750; 2,000				
Protection against rotation/guide	Guide rail with slide				
	Recirculating ball bearing				
Protected version[4]	Optional				
Pneumatic connection	G⅛		G¼		G⅜
Electrical connection	6-pin round plug to DIN 45322				

1) The proportional directional control valve MPYE used requires the characteristic values.
2) Note stroke reduction in combination with SPC200.
3) Supply of compressed air to each end of the cylinder (feature D2) is absolutely essential for Soft Stop SPC11 and axis controller SPC200 as of a length of 500 mm.
4) Protected against particles from above and the side.

Forces [N] and impact energy [Nm]					
Piston ∅	25	32	40	50	63
Theoretical force at 6 bar	295	483	754	1,178	1,870
Max. impact energy in the end positions[1]	0.1	0.2	0.4	0.8	0.8

1) Cushioning PPV must be completely open for applications with Soft Stop SPC11 and axis controller SPC200.

Permissible impact velocity:

$$v_{perm.} = \sqrt{\frac{2 \times E_{perm.}}{m_{dead} + m_{load}}}$$

Maximum permissible load:

$$m_{load} = \frac{2 \times E_{perm.}}{v^2} - m_{dead}$$

$v_{perm.}$ Permissible impact velocity
$E_{perm.}$ Maximum impact energy
m_{dead} Moving mass (drive)
m_{load} Moving effective load

Note

These specifications represent the maximum values that can be achieved. Note the maximum permissible impact energy.

Linear drives DGPIL, with integrated displacement encoder

Technical data

Positioning characteristics with axis controller SPC200						
Piston ∅		25	32	40	50	63
Repetition accuracy	[mm]	➔ 14				
Mounting position		Any				
Minimum load, horizontal[1]	[kg]	2	3	5	8	12
Maximum load, horizontal[1]	[kg]	30	45	75	120	180
Minimum load, vertical[1]	[kg]	2	3	5	8	12
Maximum load, vertical[1]	[kg]	10	15	25	40	60
Minimum travel speed	[m/s]	0.05				
Maximum travel speed	[m/s]	3				
Typical positioning time, long stroke[2]	[s]	0.75/1.20	0.85/1.20	0.75/1.20	0.95/1.25	0.90/1.20
Typical positioning time, short stroke[3]	[s]	0.40/0.60	0.45/0.60	0.40/0.60	0.50/0.65	0.50/0.65
Minimum positioning stroke[4]	[%]	3				
Stroke reduction[5]	[mm]	25		35		
Recommended proportional directional control valve		➔ 42				

1) Load = effective load + mass of all moving parts on the drive
2) At 6 bar, horizontal mounting position, DGPL-XX-1250, 1,000 mm travel at min./max. load
3) At 6 bar, horizontal mounting position, DNCM-XX-1250, 100 mm travel at min./max. load
4) In relation to the maximum stroke of the drive, but never more than 20 mm
5) The stroke reduction must be maintained on each side of the drive, the max. positionable stroke is therefore: stroke – 2x stroke reduction

Positioning characteristics with end-position controller SPC11						
Piston ∅		25	32	40	50	63
Repetition accuracy of a mid-position[1]	[mm]	±2				
Mounting position		Any				
Minimum load, horizontal[2]	[kg]	2	3	5	8	12
Maximum load, horizontal[2]	[kg]	30	45	75	120	180
Minimum load, vertical[2]	[kg]	2	3	5	8	12
Maximum load, vertical[2]	[kg]	10	15	25	40	60
Travel time	[s]	➔ SoftStop sizing software: ➔ www.festo.com				
Recommended proportional directional control valve		➔ 42				

1) In the stroke range from 225 … 2,000 mm
2) Load = effective load + mass of all moving parts on the drive

Operating and environmental conditions						
Piston ∅		25	32	40	50	63
Operating pressure[1]	[bar]	4 … 8				
Ambient temperature	[°C]	–10 … +60				
Vibration resistance		To DIN/IEC 68 Parts 2 – 6, severity level 1				
Continuous shock resistance		To DIN/IEC 68 Parts 2 – 27, severity level 1				
CE marking (see declaration of conformity)		To EU EMC Directive				
Protection class (displacement encoder)		IP65 to IEC 60 529				

1) Only applies to applications with Soft Stop SPC11 and axis controller SPC200

Linear drives DGPIL, with integrated displacement encoder

Technical data

Weight [g]					
Piston ∅	25	32	40	50	63
Standard slide GK					
Basic weight	2,220	3,320	5,330	10,700	16,870
Additional weight per 10 mm stroke	55	71	99	186	256
Moving load	605	895	1,700	3,000	4,990
Additional weights with protected version GA					
Dirt protection cover	1,690	2,500	4,000	–	–
Additional weight per 10 mm stroke	26	42	65	–	–
Moving load	907	1,350	2,550	–	–

Electrical data – Displacement encoder			
Power supply		[V DC]	24 (–15/+25%)
Maximum current consumption		[mA]	90
Resolution		[mm]	≤ 0.01
Independent linearity[1)]	Maximum	[%]	0.02
Temperature coefficient		[ppm/°K]	≤ 15
Interface			Digital, CAN with protocol: SPC-AIF

1) Minimum ±50 µm

Materials

Sectional view

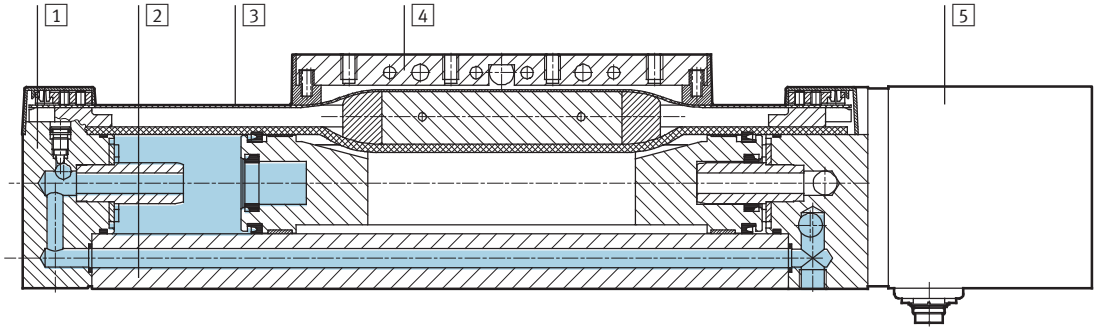

Drive		
1	End cap	Anodised aluminium
2	Profile	Anodised aluminium
3	Cover strip	Corrosion-resistant steel
4	Moment compensator	Anodised aluminium
5	Displacement encoder housing	Anodised aluminium
–	Slide	Anodised aluminium
–	Guide rail	Corrosion-resistant steel
–	Seals	Nitrile rubber, polyurethane

Note

More technical data
➔ Internet: dpgl

Linear drives DGPIL, with integrated displacement encoder

Technical data

FESTO

Characteristic load values

The indicated forces and torques refer to the centre line of the internal diameter of the profile barrel. These values must not be exceeded during dynamic operation. Special attention must be paid to the deceleration phase.

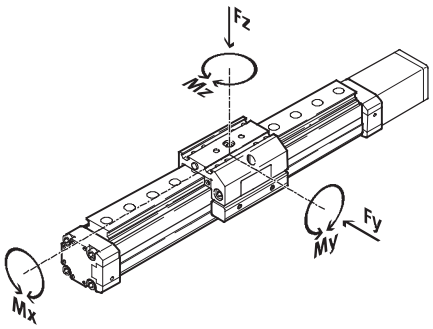

If the drive is simultaneously subjected to several of the indicated forces and torques, the following equation must be satisfied in addition to the indicated maximum loads:

$$\frac{Fy}{Fy_{max.}} + \frac{Fz}{Fz_{max.}} + \frac{Mx}{Mx_{max.}} + \frac{My}{My_{max.}} + \frac{Mz}{Mz_{max.}} \leq 1$$

Permissible forces and torques						
Piston ∅		25	32	40	50	63
$Fy_{max.}$	[N]	3,080	3,080	7,300	7,300	14,050
$Fz_{max.}$	[N]	3,080	3,080	7,300	7,300	14,050
$Mx_{max.}$	[Nm]	45	63	170	240	580
$My_{max.}$	[Nm]	85	127	330	460	910
$Mz_{max.}$	[Nm]	85	127	330	460	910

Maximum permissible support span l as a function of force F

The axis may need to be supported with central supports MUP in order to limit deflection in the case of large strokes. The following graphs can be used to determine the maximum permissible support span l as a function of force F acting on the axis.

Force on the surface of the slide

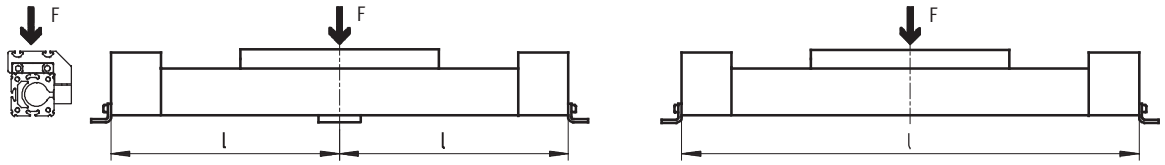

Maximum support span l (without central support) as a function of force F

Piston ∅ 25 ... 40

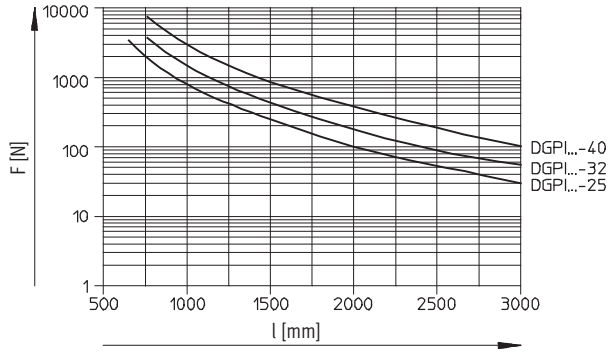

Piston ∅ 50/63

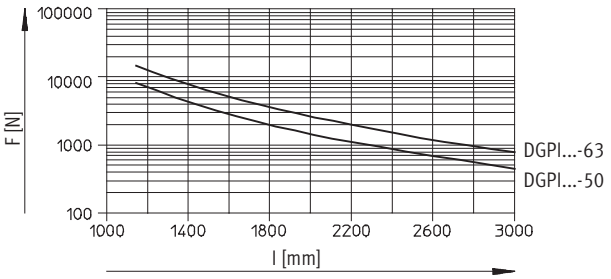

Linear drives DGPIL, with integrated displacement encoder

Technical data

FESTO

Dimensions Download CAD data ➔ **www.festo.com**

Standard slide GK

Piston ∅ 25

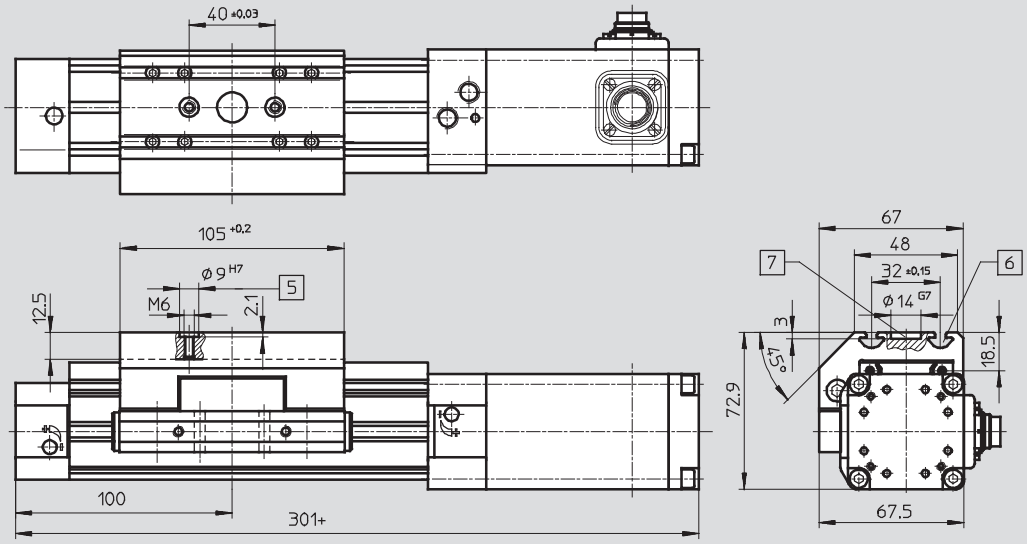

5 Hole for centring sleeve ZBH-9
6 Mounting slot for slot nut NSTL
7 Hole for central mounting SLZZ
\+ = plus stroke length

Basic dimensions
➔ 16

Protected version GA

Piston ∅ 25

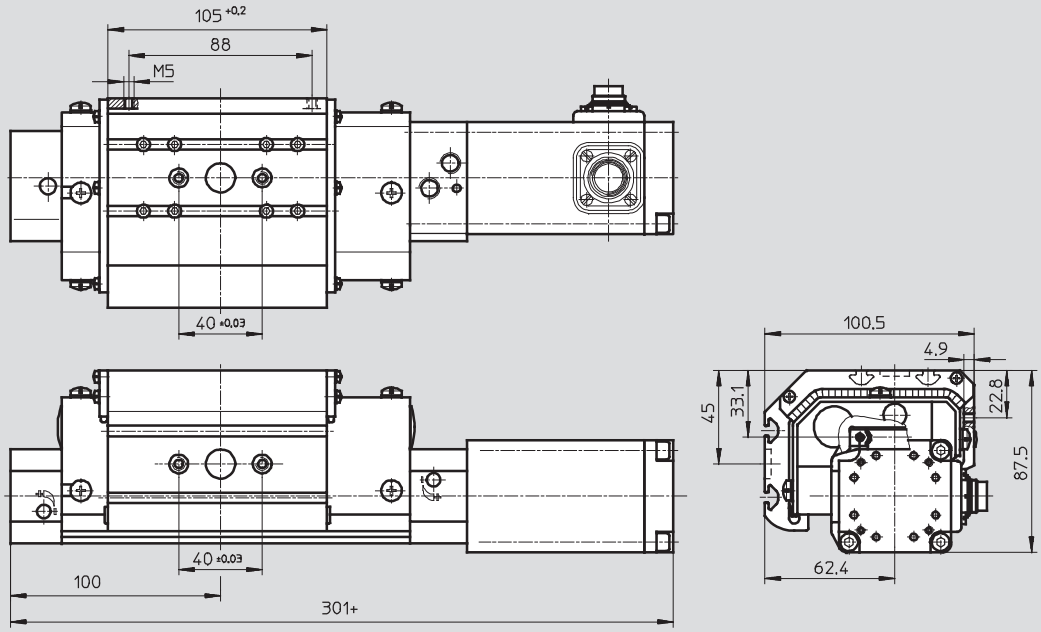

\+ = plus stroke length

Basic dimensions
➔ 16

Linear drives DGPIL, with integrated displacement encoder

Technical data

FESTO

Dimensions Download CAD data ➔ **www.festo.com**

Standard slide GK

Piston ∅ 32 … 63

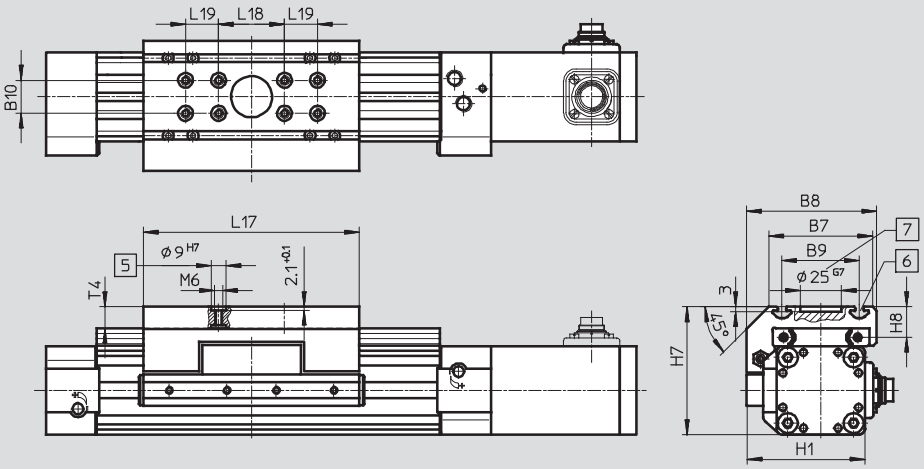

5 Hole for centring sleeve ZBH-9
6 Mounting slot for slot nut NSTL
7 Hole for central mounting SLZZ
\+ = plus stroke length

Basic dimensions
➔ 18

Protected version GA

Piston ∅ 32/40

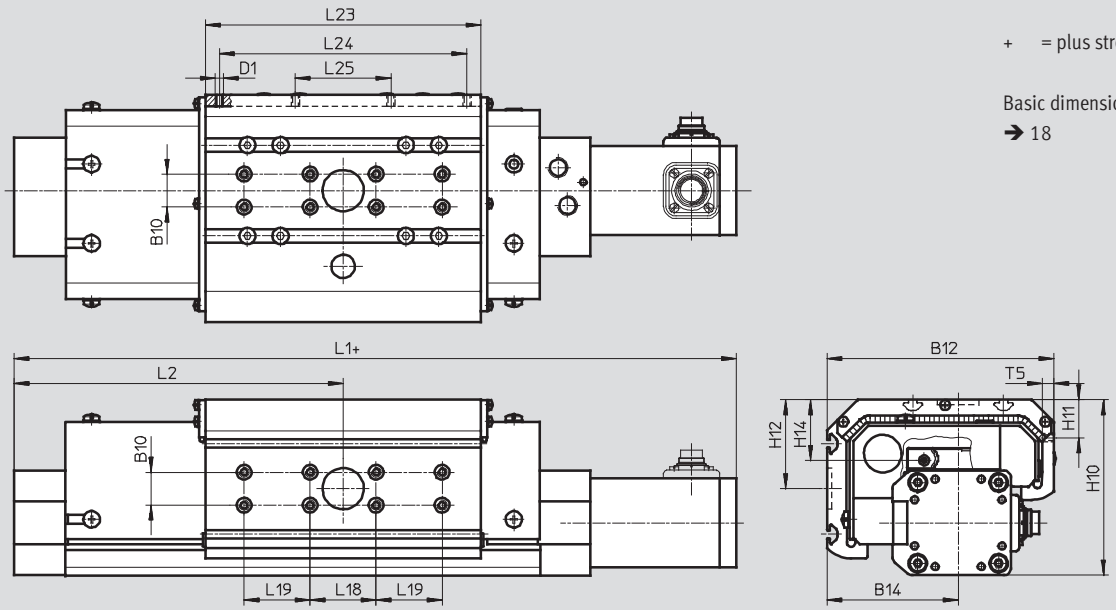

\+ = plus stroke length

Basic dimensions
➔ 18

∅ [mm]	B7	B8	B9	B10 ±0.03	B12	B14	D1	H1	H7	H8	H10
32	63	79	47 ±0.15	20	112.1	67.6	–	72	77.5	18.5	93.1
40	78.5	96.5	55 ±0.2	20	137.6	79.6	M5	86	90.5	20	106.6
50	97	122	72 ±0.2	40	–	–	–	115	122.5	26	–
63	121	142	90 ±0.25	40	–	–	–	131	144.5	30	–

∅ [mm]	H11	H12	H14	L1	L2	L17 +0.2	L18 ±0.03	L19 ±0.03	L23	L24	L25	T4 max.	T5
32	–	49.5	34.1	345	125	131	40	–	131	–	–	12.5	–
40	23.1	54	36.1	397	150	167	40	40	167	150	58	12.5	7
50	–	–	–	465	175	202	40	40	–	–	–	18.5	–
63	–	–	–	513	200	230	40	40	–	–	–	20.5	–

Linear drives DGPIL, with integrated displacement encoder

Ordering data – Modular products

Order code
Mandatory data

KF Recirculating ball bearing guide
SH Slide at rear
SV Slide at front
D2 Supply port at both ends
GK Standard slide

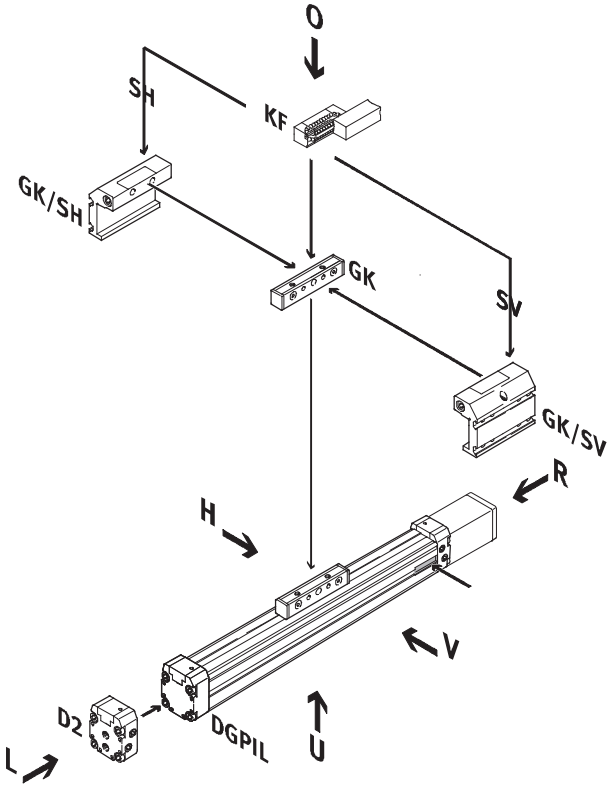

AV Displacement encoder connection to front
AH Displacement encoder connection to rear
AU Displacement encoder connection underneath

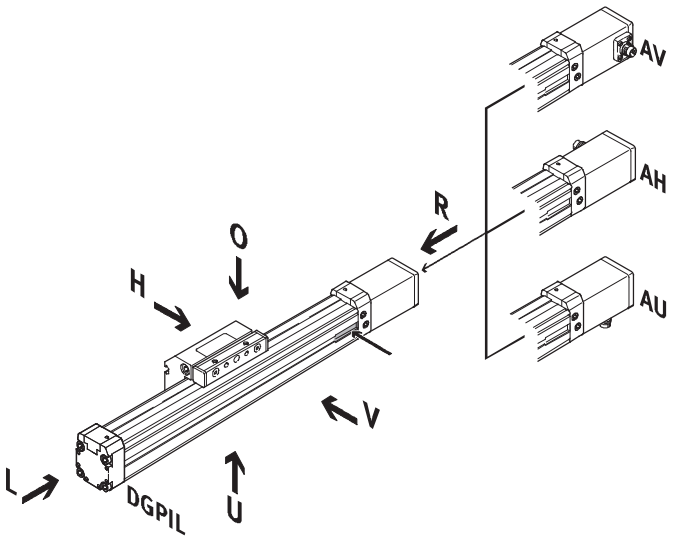

GA Protected version

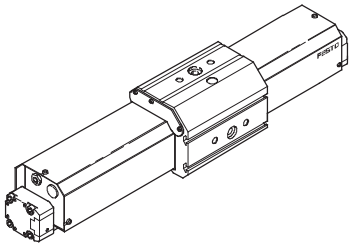

Linear drives DGPIL, with integrated displacement encoder

Ordering data – Modular products

Order code
Options

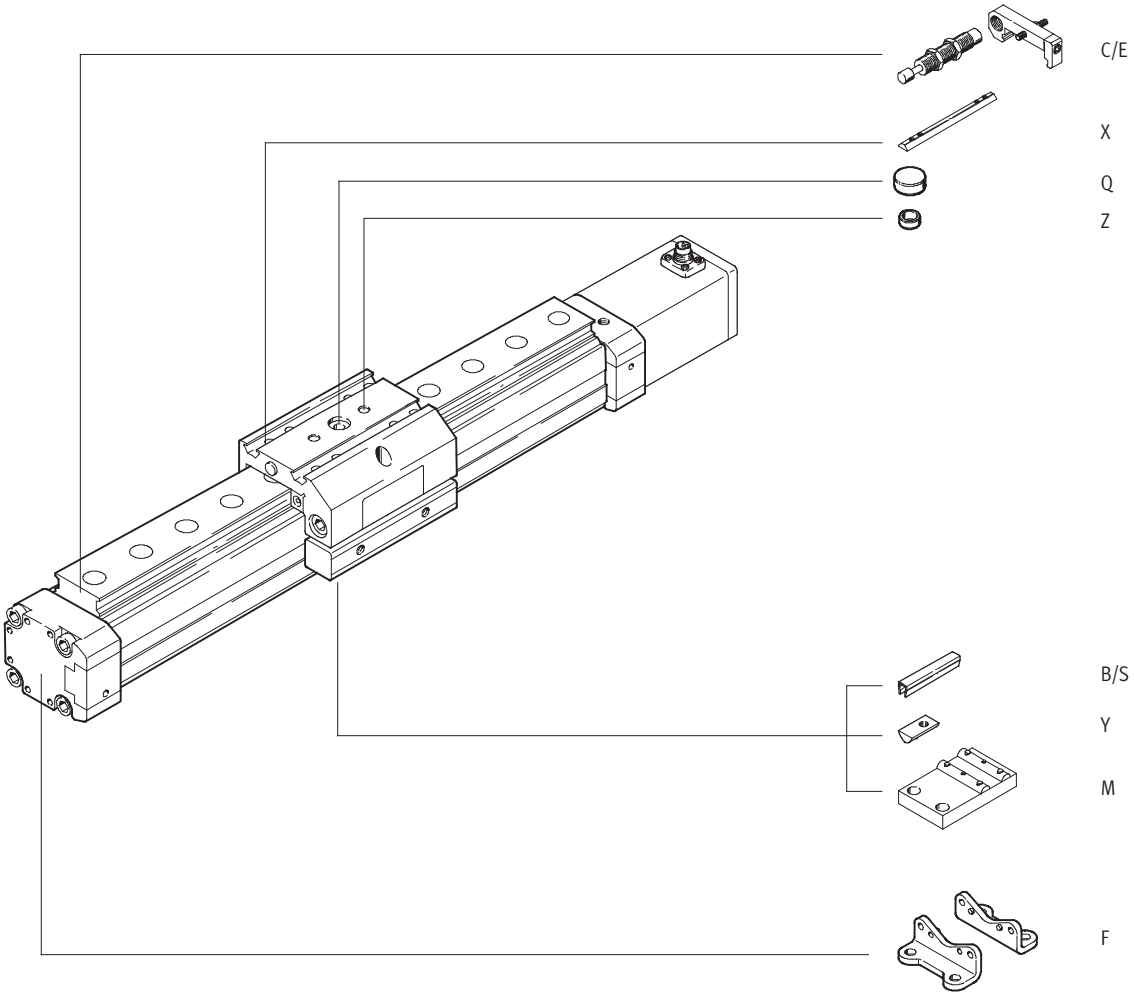

Do not use for new designs!
Type discontinued

Linear drives DGPIL, with integrated displacement encoder

Ordering data – Modular products

FESTO

M Mandatory data

Module No.	Function	Size	Stroke	Cushioning	Generation	Guide	Displacement encoder	Basic design	Connection position for displacement encoder	Slide attachment position
175 134	DGPIL	25	225 ...	PPV	B	KF	AIF	GK	AH	SH
175 135		32	2,000						AU	SV
175 136		40							AV	
175 137		50								
175 138		63								
Ordering example										
175 134	**DGPIL** –	**25** –	**450** –	**PPV** –	**B** –	**KF** –	**AIF** –	**GK** –	**AU** –	**SH** –

Ordering table

Size		25	32	40	50	63	Conditions	Code		Enter code
M	Module No.	**175 134**	**175 135**	**175 136**	**175 137**	**175 138**				
	Function	Pneumatic linear drive with integrated displacement encoder and slide						**DGPIL**		DGPIL
	Size	25	32	40	50	63		**-...**		
	Stroke [mm]	225; 300; 360; 450; 500; 600; 750; 1,000; 1,250; 1,500; 1,750; 2,000						**-...**		
	Cushioning	Pneumatic cushioning, adjustable at both ends						**-PPV**		-PPV
	Generation	B series						**-B**		-B
	Guide	Recirculating ball bearing guide						**-KF**		-KF
	Displacement encoder	Temposonic with CAN axis interface						**-AIF**		-AIF
	Basic design	Standard piston/slide						**-GK**		-GK
	Connection position for displacement encoder AIF and compressed air	Connection position for displacement encoder and supply port, rear						**-AH**		
		Connection position for displacement encoder and supply port, underneath						**-AU**		
		Connection position for displacement encoder and supply port, front						**-AV**		
	Slide attachment position	Slide at rear						**-SH**		
		Slide at front						**-SV**		

Transfer order code

	DGPIL	–		–		–	**PPV**	–	**B**	–	**KF**	–	**AIF**	–	**GK**	–		–		

Linear drives DGPIL, with integrated displacement encoder

Ordering data – Modular products

FESTO

0 Options									
Supply port	Protected version	Acces-sories	Slot cover	Slot nut	Centring sleeve	Central support	Central mounting	Foot mounting	Shock absorber
D2	GA	ZUB	...S ...B	...X ...Y	...Z	...M	...Q	...F	...C ...E
– D2	–	: ZUB	– 2S2B	2X				F	2C

Ordering table

Size		25	32	40	50	63	Condi-tions	Code		Enter code
Supply port		At both ends						-D2		
0 Protected version		Protected roller design for harsh environment		–	–	–		-GA		
Accessories		Enclosed separately						:ZUB-		:ZUB-
Slot cover, 2 pcs., 0.5 m	Sensor slot	1 ... 10						...S		
	Mounting slot	–	1 ... 10					...B		
Slot nut	Slide	1 ... 10						...X		
	Mounting slot	–	1 ... 10					...Y		
Centring sleeve (pack of 10)		10, 20, 30, 40, 50, 60, 70, 80, 90						...Z		
Central support		1 ... 10						...M		
Central mounting		1 ... 10						...Q		
Foot mounting		1 ... 10						...F		
Shock absorber kit	With retainer, 1-fold	1 ... 10					1	...C		
		1 ... 10		–	–	–	2	...E		

1 **C** Not with protected version GA.
2 **E** Only with protected version GA.

Transfer order code

–		–		:	ZUB	–								

Foot mounting HP
(order code: F)

Material:
Galvanised steel

Free of copper, PTFE and silicone

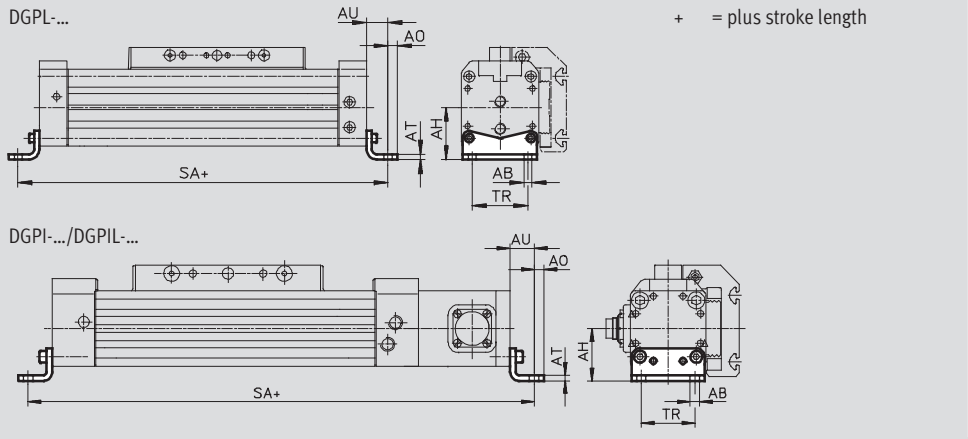

Dimensions and ordering data											
For ∅ [mm]	AB ∅	AH	AO	AT	AU	SA DGPL	SA DGPI(L)	TR	Weight [g]	Part No.	Type
25	5.5	29.5	6	3	13	226	327	32.5	61	**150 731**	**HP-25**
32	6.6	37	7	4	17	284	379	38	117	**150 732**	**HP-32**
40	6.6	46	8.5	5	17.5	335	432	45	188	**150 733**	**HP-40**
50	9	61	11	6	25	400	515	65	243	**150 734**	**HP-50**
63	11	69	13.5	6	28	456	569	75	305	**150 735**	**HP-63**

Central support MUP
(order code: M)

Material:
Galvanised steel

Free of copper, PTFE and silicone


MUP-40

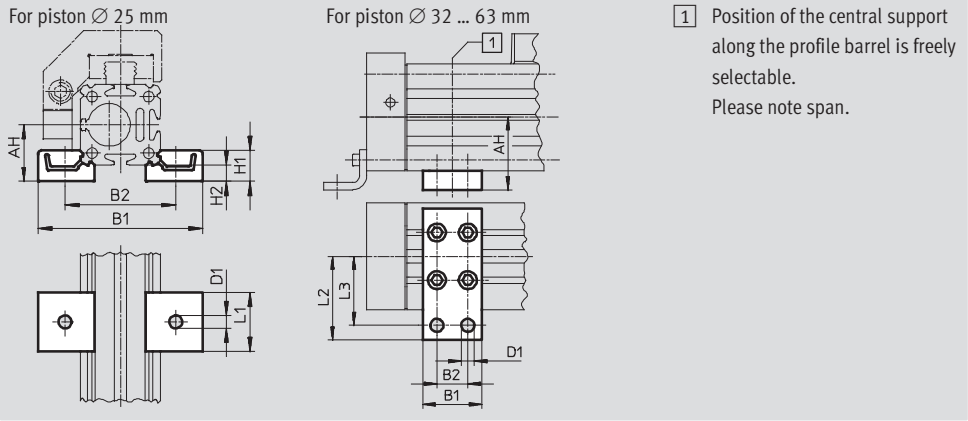

Dimensions and ordering data											
For ∅ [mm]	AH	B1	B2	D1 ∅	H1	H2	L1	L2	L3	Weight [g]	Part No.	Type
25	29.5	81	58	5.5	13	7	25	–	–	33	**150 736**	**MUP-18/25**
32	37	35	22	6.6	–	–	–	41.5	35	89	**150 737**	**MUP-32**
40	46	35	22	6.6	–	–	–	47	40	126	**150 738**	**MUP-40**
50	61	50	26	11	–	–	–	70	58	241	**150 739**	**MUP-50**
63	69	50	26	11	–	–	–	77	65	340	**150 800**	**MUP-63**

Shock absorber DG-GA
for DGPIL
Protected version GA
(order code: E)

Materials:
Housing: Galvanised steel
Piston rod: High-alloy steel
Seals: NBR, PUR
Free of copper, PTFE and silicone

Ordering data			
For ∅ [mm]	Weight [g]	Part No.	Type
25	70	**192 875**	**DG-GA-25-YSR**
32	110	**192 876**	**DG-GA-32-YSR**
40	140	**192 877**	**DG-GA-40-YSR**

Shock absorber YSR-...-C
for DGPL/DGPIL
(order code: C)

Materials:
Housing: Galvanised steel
Piston rod: High-alloy steel
Seals: NBR, PUR
Free of copper, PTFE and silicone

Note

Shock absorber YSRW with progressive characteristics
➔ Internet: ysrw

Ordering data			
For ∅ [mm]	Weight [g]	Part No.	Type
25	70	**34 572**	**YSR-12-12-C**
32	70	**34 572**	**YSR-12-12-C**
40	140	**34 573**	**YSR-16-20-C**
50	140	**34 573**	**YSR-16-20-C**
63	240	**34 574**	**YSR-20-25-C**

Shock absorber retainer KYP
for DGPL/DGPIL
(order code: C)

Materials:
Retainer: Aluminium
Sleeve: Corrosion-resistant steel

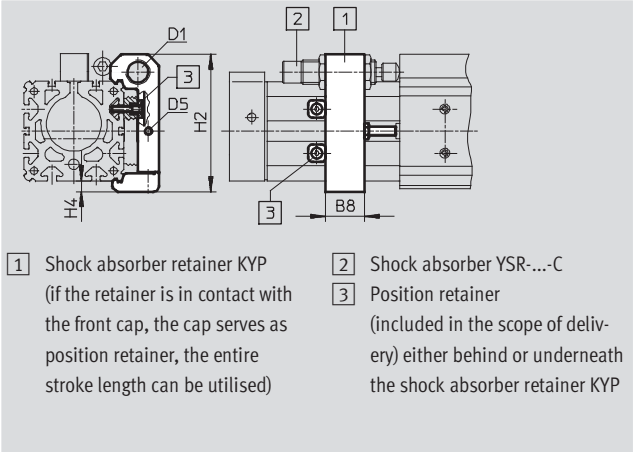

Dimensions and ordering data

For ∅ [mm]	B8	D1	D5	H2	H4	Weight [g]	Part No.	Type
25	19	M16x1	M5	69.5	6	95	**158 908**	**KYP-25**
32	25	M16x1	M5	80	8	130	**158 909**	**KYP-32**
40	32	M22x1.5	M5	102	8	209	**158 910**	**KYP-40**
50	35	M22x1.5	M8	124	10	415	**158 911**	**KYP-50**
63	44	M26x1.5	M10	152.5	11.5	609	**158 912**	**KYP-63**

Ordering data – Push-in fittings

Technical data ➔ Internet: quick star

	For ∅ [mm]	Comment	Part No.	Type	PU[1]
	25, 32	For connecting compressed air tubing with standard O.D.	**186 098**	**QS-G⅛-8**	10
	40, 50		**186 099**	**QS-G¼-8**	
			186 101	**QS-G¼-10**	10
	63		**186 100**	**QS-G⅜-8**	10
			186 102	**QS-G⅜-10**	
			186 103	**QS-G⅜-12**	

1) Packaging unit

Ordering data						Technical data ➔ Internet: mounting component
	For ∅ [mm]	Comment	Order code	Part No.	Type	PU[1]
Slot nut NST						
	25	For mounting slot	Y	**526 091**	**NST-HMV-M4**	1
	32, 40			**150 914**	**NST-5-M5**	1
	50, 63			**150 915**	**NST-8-M6**	1
Slot nut NSTL						
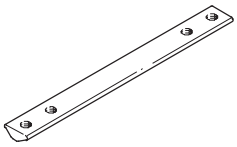	25	For slide	X	**158 410**	**NSTL-25**	1
	32			**158 411**	**NSTL-32**	1
	40			**158 412**	**NSTL-40**	1
	50			**158 413**	**NSTL-50**	1
	63			**158 414**	**NSTL-63**	1
Centring sleeve ZBH						
	25 … 63	For slide	Z	**150 927**	**ZBH-9**	10
Central mounting SLZZ						
	25	For slide	Q	**150 900**	**SLZZ-16/10**	1
	32, 40			**150 901**	**SLZZ-25/16**	
	50, 63			**150 904**	**SLZZ-50/40**	1
Slot cover ABP						
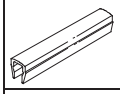	32, 40	For mounting slot Every 0.5 m	B	**151 681**	**ABP-5**	2
	50, 63			**151 682**	**ABP-8**	
Slot cover ABP-S						
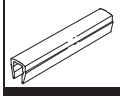	25 … 63	For sensor slot Every 0.5 m	S	**563 360**	**ABP-5-S1**	2

1) Packaging unit

Ordering data – Proportional directional control valves Technical data ➔ Internet: mpye

Selection aid

Application	For ∅ [mm]	Stroke [mm] 225	300	360	450	500	600	750	1,000	1,250	1,500	1,750	2,000
Horizontal/vertical	**For applications with axis controller SPC200**												
	25	1/1	1/1	1/1	1/1	1/1	1/1	1/1	2/2	2/2	2/2	2/2	2/2
	32	1/1	1/1	2/2	2/2	2/2	2/2	2/2	2/2	2/2	2/2	2/2	2/2
	40	1/1	2/2	2/2	2/2	2/2	2/2	2/2	3/3	3/3	3/3	3/3	3/3
	50	2/2	2/2	2/2	2/2	2/2	3/3	3/3	3/3	3/3	3/3	3/3	3/3
	63	3/3	3/3	3/3	3/3	3/3	3/3	3/3	3/3	4/4	4/4	4/4	4/4
	For applications with Soft Stop end-position controller SPC11												
	25	1/[1)]	1/1	2/1	2/1	2/1	2/2	2/2	2/3	2/3	2/3	2/3	2/3
	32	1/[1)]	2/1	2/1	2/1	2/1	2/1	3/2	3/3	3/3	3/3	3/3	3/3
	40	2/1	2/1	2/1	2/1	2/2	3/3	3/4	3/4	3/4	3/4	3/4	3/4
	50	1/1	2/1	2/2	3/2	3/3	4/3	4/4	4/4	4/4	4/4	4/4	4/4
	63	2/1	2/2	3/3	3/3	4/4	4/4	4/4	4/4	4/4	4/4	4/4	4/4

Valve	Selection number	Part No.	Type
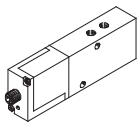	1	**151 692**	**MPYE-5-⅛-LF-010-B**
	2	**151 693**	**MPYE-5-⅛-HF-010-B**
	3	**151 694**	**MPYE-5-¼-010-B**
	4	**151 695**	**MPYE-5-⅜-010-B**

1) On request

Note

The representation e.g. 2/1 in the columns means:

Selection number 2	Selection number 1
for horizontal application	for vertical application
151 693 MPYE-5-⅛-HF-010-B	151 692 MPYE-5-⅛-LF-010-B

Ordering data – Proximity sensor for T-slot, magnetic reed						Technical data ➔ Internet: sme
	Type of mounting	Switching output	Electrical connection	Cable length [m]	Part No.	Type
N/O contact						
	Insertable in the slot lengthwise, flush with the cylinder profile	Contacting	Cable, 3-wire	2.5	**150 855**	**SME-8-K-LED-24**
			Plug M8x1, 3-pin	0.3	**150 857**	**SME-8-S-LED-24**
N/C contact						
	Insertable in the slot lengthwise, flush with the cylinder profile	Contacting	Cable, 3-wire	7.5	**160 251**	**SME-8-O-K-LED-24**

Ordering data – Proximity sensor for T-slot, magneto-resistive						Technical data ➔ Internet: smt
	Type of mounting	Switching output	Electrical connection	Cable length [m]	Part No.	Type
N/O contact						
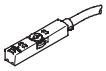	Insertable in the slot from above, flush with the cylinder profile, short design	PNP	Cable, 3-wire	2.5	**574335**	**SMT-8M-A-PS-24V-E-2,5-OE**
N/C contact						
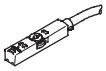	Insertable in the slot from above, flush with the cylinder profile, short design	PNP	Cable, 3-wire	7.5	**574340**	**SMT-8M-A-PO-24V-E-7,5-OE**

Ordering data – Connecting cables					Technical data ➔ Internet: nebu
	Electrical connection, left	Electrical connection, right	Cable length [m]	Part No.	Type
	Straight socket, M8x1, 3-pin	Cable, open end, 3-wire	2.5	**541 333**	**NEBU-M8G3-K-2.5-LE3**
			5	**541 334**	**NEBU-M8G3-K-5-LE3**
	Angled socket, M8x1, 3-pin	Cable, open end, 3-wire	2.5	**541 338**	**NEBU-M8W3-K-2.5-LE3**
			5	**541 341**	**NEBU-M8W3-K-5-LE3**

Product Range and Company Overview

A Complete Suite of Automation Services

Our experienced engineers provide complete support at every stage of your development process, including: conceptualization, analysis, engineering, design, assembly, documentation, validation, and production.

Custom Automation Components
Complete custom engineered solutions

Custom Control Cabinets
Comprehensive engineering support and on-site services

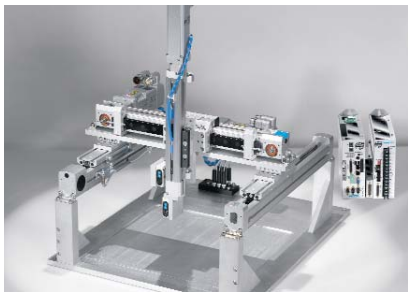

Complete Systems
Shipment, stocking and storage services

The Broadest Range of Automation Components

With a comprehensive line of more than 30,000 automation components, Festo is capable of solving the most complex automation requirements.

Electromechanical
Electromechanical actuators, motors, controllers & drives

Pneumatics
Pneumatic linear and rotary actuators, valves, and air supply

PLCs and I/O Devices
PLC's, operator interfaces, sensors and I/O devices

Supporting Advanced Automation... As No One Else Can!
Festo is a leading global manufacturer of pneumatic and electromechanical systems, components and controls for industrial automation, with more than 12,000 employees in 56 national headquarters serving more than 180 countries. For more than 80 years, Festo has continuously elevated the state of manufacturing with innovations and optimized motion control solutions that deliver higher performing, more profitable automated manufacturing and processing equipment. Our dedication to the advancement of automation extends beyond technology to the education and development of current and future automation and robotics designers with simulation tools, teaching programs, and on-site services.

Quality Assurance, ISO 9001 and ISO 14001 Certifications

Festo Corporation is committed to supply all Festo products and services that will meet or exceed our customers' requirements in product quality, delivery, customer service and satisfaction.

To meet this commitment, we strive to ensure a consistent, integrated, and systematic approach to management that will meet or exceed the requirements of the ISO 9001 standard for Quality Management and the ISO 14001 standard for Environmental Management.

9001: CERTCC5-16248-2006-AQ-ESN-TGA
ISO 9001
ISO 14001
DNV
Certified Company
14001: CERTCC5-16248A-2006-AQ-ESN-TGA

FSC
Printed on recycled paper at New Horizon Graphic, Inc., FSC certified as an environmentally friendly printing plant.

Festo North America

Festo Regional Contact Center

5300 Explorer Drive
Mississauga, Ontario L4W 5G4
Canada

USA Customers:

For ordering assistance,
Call: 1.800.99.FESTO (1.800.993.3786)
Fax: 1.800.96.FESTO (1.800.963.3786)
Email: customer.service@us.festo.com

For technical support,
Call: 1.866.GO.FESTO (1.866.463.3786)
Fax: 1.800.96.FESTO (1.800.963.3786)
Email: product.support@us.festo.com

Canadian Customers:

Call: 1.877.GO.FESTO (1.877.463.3786)
Fax: 1.877.FX.FESTO (1.877.393.3786)
Email: festo.canada@ca.festo.com

USA Headquarters

Festo Corporation
395 Moreland Road
P.O. Box 18023
Hauppauge, NY 11788, USA
www.festo.com/us

USA Sales Offices

Appleton
North 922 Tower View Drive, Suite N
Greenville, WI 54942, USA

Boston
120 Presidential Way, Suite 330
Woburn, MA 01801, USA

Chicago
1441 East Business Center Drive
Mt. Prospect, IL 60056, USA

Dallas
1825 Lakeway Drive, Suite 600
Lewisville, TX 75057, USA

Detroit – Automotive Engineering Center
2601 Cambridge Court, Suite 320
Auburn Hills, MI 48326, USA

New York
395 Moreland Road
Hauppauge, NY 11788, USA

Silicon Valley
4935 Southfront Road, Suite F
Livermore, CA 94550, USA

United States

USA Headquarters, East: Festo Corp., 395 Moreland Road, Hauppauge, NY 11788
Phone: 1.631.435.0800; Fax: 1.631.435.8026;
Email: info@festo-usa.com **www.festo.com/us**

Canada

Headquarters: Festo Inc., 5300 Explorer Drive, Mississauga, Ontario L4W 5G4
Phone: 1.905.624.9000; Fax: 1.905.624.9001;
Email: festo.canada@ca.festo.com **www.festo.ca**

Mexico

Headquarters: Festo Pneumatic, S.A., Av. Ceylán 3, Col. Tequesquinahuac,
54020 Tlalnepantla, Edo. de México
Phone: 011 52 [55] 53 21 66 00; Fax: 011 52 [55] 53 21 66 65;
Email: festo.mexico@mx.festo.com **www.festo.com/mx**

Central USA
Festo Corporation
1441 East Business
Center Drive
Mt. Prospect, IL 60056, USA
Phone: 1.847.759.2600
Fax: 1.847.768.9480

Western USA
Festo Corporation
4935 Southfront Road,
Suite F
Livermore, CA 94550, USA
Phone: 1.925.371.1099
Fax: 1.925.245.1286

Festo Worldwide

Argentina Australia Austria Belarus Belgium Brazil Bulgaria Canada Chile China Colombia Croatia Czech Republic Denmark Estonia Finland France Germany Great Britain Greece Hong Kong Hungary India Indonesia Iran Ireland Israel Italy Japan Latvia Lithuania Malaysia Mexico Netherlands New Zealand Norway Peru Philippines Poland Romania Russia Serbia Singapore Slovakia Slovenia South Africa South Korea Spain Sweden Switzerland Taiwan Thailand Turkey Ukraine United States Venezuela

www.festo.com