Valve terminals VTSA

FESTO

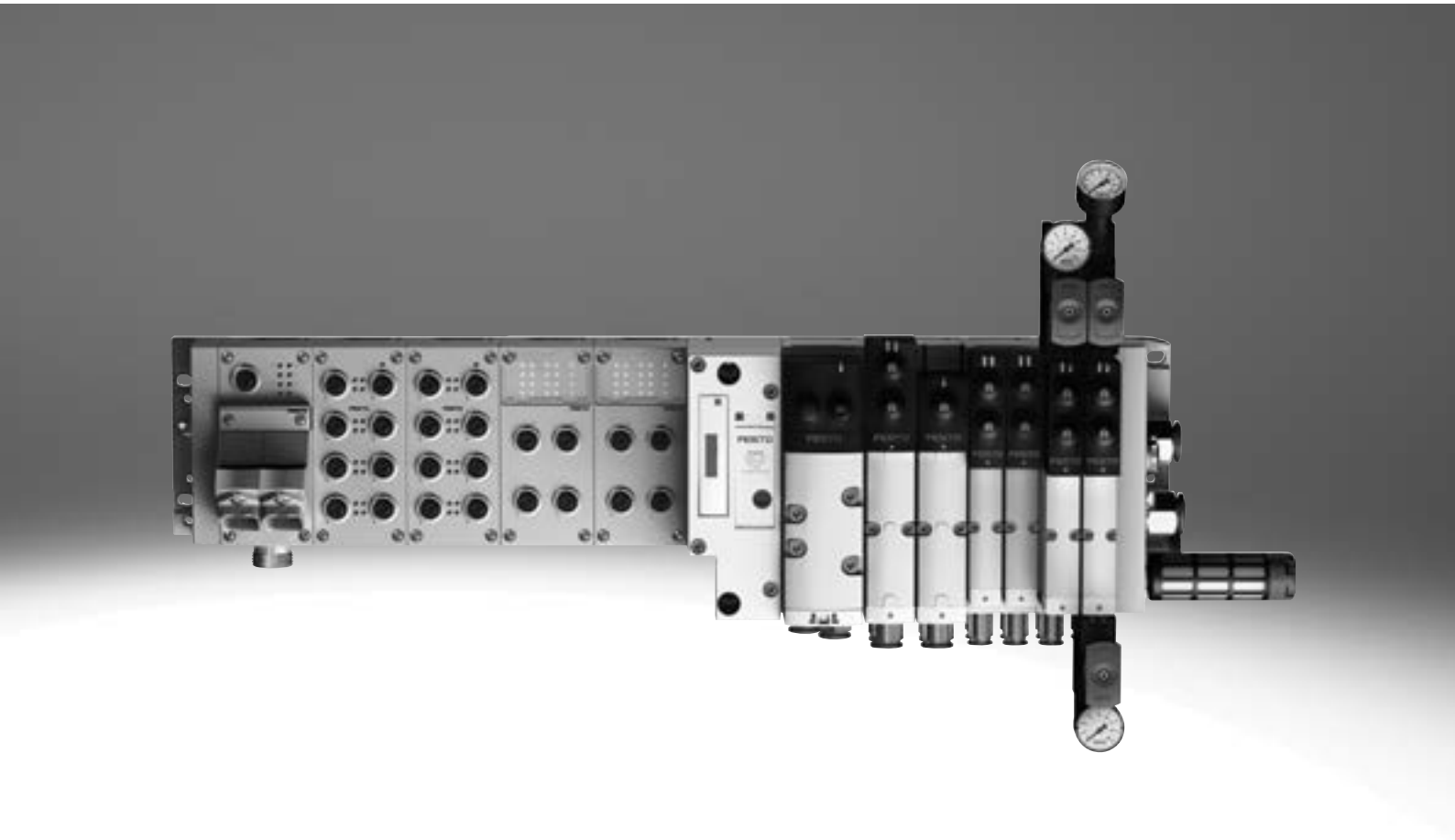

Key features

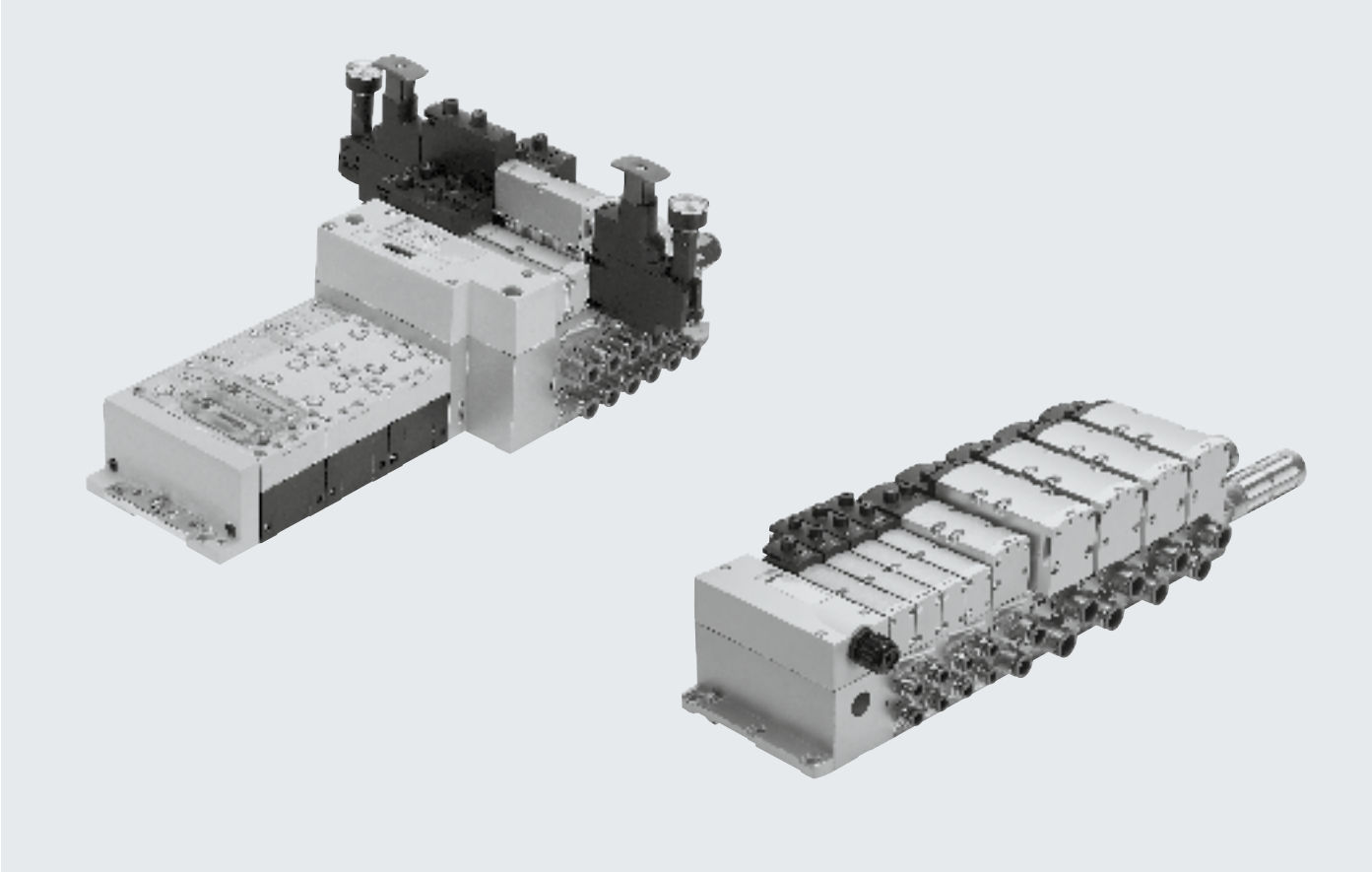

Innovative

- High-performance valves in a sturdy metal housing
- Five valve sizes on one valve terminal (width 65 mm with adapter)
- Standardised from the multi-pin plug to the fieldbus connection and control block
- Dream team: fieldbus valve terminal suitable for electrical peripherals CPX. This means:
  - Forward-looking internal communication system for actuating the valves and CPX modules
  - Four valve sizes on one valve terminal without adapters
  - Integration of smart valve functions with VTSA-F-CB
- Valve functions for integration in control architectures of higher categories to EN ISO 13849-1

Flexible

- Modular system offering a range of configuration options
- Up to 32 solenoid coils
- Conversions and extensions are possible at any time
- Integration of innovative function modules possible
- Flexible air supply and variable pressure zones
- Reverse operation
- High pressure range
- –0.9 ... 10 bar, flow rate range 550 ... 4000 l/min
- Wide range of valve functions
- Valves: 24 V DC

Valve terminal VTSA-F-CB

- Serial communication in the pneumatic part
- A maximum of 7 voltage zones (6 of which via Profisafe shut-off module and one additional voltage zone via Uval)
- Up to 24 solenoid coils per voltage zone
- Up to 96 valve positions and up to 64 interlinking blocks per valve terminal

Reliable

- Sturdy and durable metal components
  - Valves
  - Manifold sub-bases
  - Seals
- Fast troubleshooting with LEDs on the valves and diagnostics via fieldbus
- Reliable servicing thanks to valves that can be replaced quickly and easily
- Manual override, either non-detenting, non-detenting/detenting or concealed
- Durable thanks to tried-and-tested piston spool valves
- Large and durable labelling system
- 100% duty cycle

Easy to install

- Ready-to-install and tested unit
- Reduced costs for selection, ordering, assembly and commissioning
- Secure mounting on a wall or H-rail
- Manifold sub-bases can be extended using four screws, sturdy duct separation on metal support

Note

The key features, valves and functions of width 65 mm are described separately in the chapter “Adaptation to width 65 mm”, ISO size 3
➔ page 226.

Key features

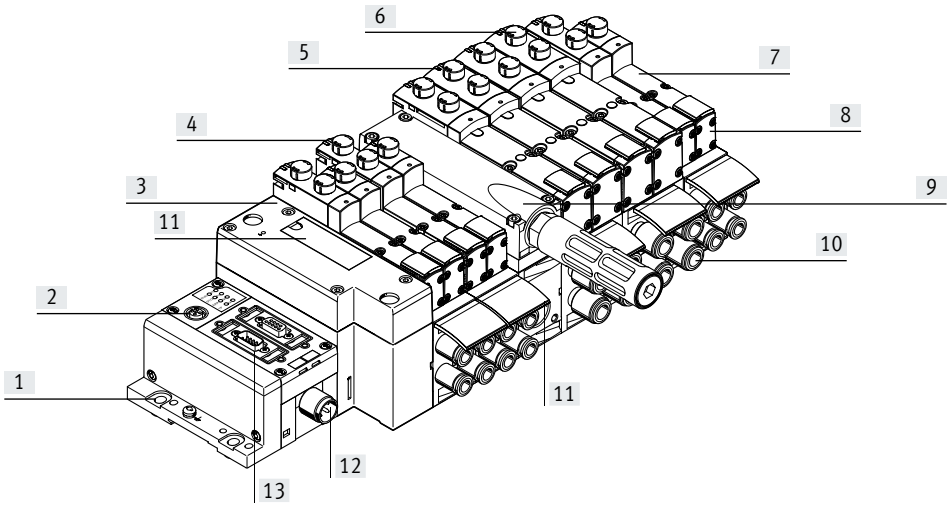

[1] Quick to mount: directly using screws or H-rail
[2] CPX diagnostic interface for hand-held devices (channel-oriented diagnostics down to the individual valve)
[3] Pneumatic interface to CPX
[4] Widths 18 mm, 26 mm, 42 mm and 52 mm can be combined on one valve terminal without an adapter
[5] Reduced downtimes: on-site LED diagnostics
[6] Safe operation: manual override non-detenting, non-detenting/detenting or concealed
[7] Versatile: 32 valve positions/32 solenoid coils
One valve series for a wide range of flow rates
[8] Comprehensive range of valve functions
[9] Modular: air supply plate facilitates the creation of multiple pressure zones as well as numerous additional exhaust and supply ports
[10] Practical: large connections, flow-optimised ducts, sturdy metal threads or pre-assembled push-in connections for compressed air tubing with standardised O.D.
[11] Convenient: large inscription labels
[12] Reliable: valves, outputs and logic voltage can be switched off separately
[13] Simple electrical connections
– Fieldbus interface via CPX
– Multi-pin plug connection with pre-assembled cable or terminal strip (Cage Clamp®)
– Control block via CPX
– AS-Interface
– Individual connection
– IO-Link
– I-Port

Equipment options
Valve functions

- 2x 2/2-way valve, single solenoid, pneumatic spring, normally closed
- 2x 3/2-way valve, single solenoid
  – Normally open
  – Normally open, reversible
  – Normally closed
  – Normally closed, reversible
- 2x 3/2-way valve, single solenoid
  – 1x normally open, 1x normally closed
  – 1x normally open, 1x normally closed, reversible
- 5/2-way solenoid valve
  – Single solenoid, pneumatic spring/mechanical spring
  – Double solenoid
  – Double solenoid with dominant signal
- 5/2-way valves for special functions, single solenoid
  – Mechanical spring
  – Switching position sensing via inductive sensors with PNP or NPN output
  – Protection against unexpected start-up to EN 1037
  – Reversing
- 5/3-way solenoid valve
  – Mid-position pressurised
  – Mid-position closed
  – Mid-position exhausted
- 5/3-way solenoid valve for special functions
  – Switching position 14 is retained (switching position 14 is retained in the event of an emergency off application/power failure), there is no spring return to switching position 12.
  – Only for valve terminal (plug-in)
  – Mid-position exhausted or mid-position 1⇢2, 4⇢5
  – Switching position 14 is retained
  – Pneumatic spring return
- 5/3-way solenoid valve for special functions
  – Switching position 12 is retained (switching position 12 is retained in the event of an emergency off application/power failure), there is no spring return to switching position 14.
  – Only for valve terminal (plug-in)
  – Mid-position exhausted or mid-position 1⇢4, 2⇢3
  – Switching position 12 is retained
  – Pneumatic spring return
- Soft-start valve for slow and safe pressure build-up
  – High degree of safety
  – Sensing function provides feedback on switching operation

Note
The key features, valves and functions of width 65 mm are described separately in the chapter "Adaptation to width 65 mm", ISO size 3
➔ page 226.

Key features

Connection variants

Individual valve on individual sub-base, plug-in

- Electrical connection via standardised 4-pin M12 plug or via 4-pin spring-loaded terminal for configuration by the user
- Available with internal/external pilot air supply

Individual valve on individual sub-base, square plug or plug-in

- With integrated switching position sensing
- Electrical connection to EN 175301-803 type C (square plug) or
- For configuration by the user via 4-pin spring-loaded terminal or
- Cable with open end

Fieldbus interface CPX terminal

- Max. 32 valve positions/max. 32 solenoid coils
- Any compressed air supply
- Any number of pressure zones

Fieldbus interface CPX terminal with VTSA-F-CB

- Serial communication in the pneumatic part
- Up to 6 voltage zones for load voltage of the valves in the pneumatic part
- Flexible shutdown of up to 3 voltage zones in the CPX interfaces, either internally with PROFIsafe or externally by 3x M12
- Pilot air switching valve with integrated pressure sensor and connection via internal bus
- Soft-start valve with integrated pressure sensor and connection via internal bus
- Vacuum generator with 3 performance settings, air-saving circuit, optional increased ejection rate (power ejector pulse) and connection via internal bus, parameters can be configured via the CPX system

Valve terminal with individual connection

- Max. 20 valve positions/ max. 20 solenoid coils
- Any compressed air supply
- Any number of pressure zones

Valve terminal with multi-pin plug connection

- Max. 32 valve positions/ max. 32 solenoid coils
- Parallel, modular valve linking
- Any compressed air supply
- Any number of pressure zones

AS-Interface

- 1 to 8 valve positions/max. 8 solenoid coils
- Soft-start valve for slow and safe pressure build-up

I-Port

- Max. 16 valve positions/ max. 32 solenoid coils
- Connection to an I-Port master
- Direct mounting of a bus node

IO-Link

- Max. 16 valve positions/ max. 32 solenoid coils
- Connection to an IO-Link master

Combinable

- Valve width 18 mm: flow rate of VTSA up to 550 l/min, VTSA-F up to 700 l/min
- Width 26 mm: flow rate of VTSA up to 1100 l/min, VTSA-F up to 1350 l/min
- Valve width 42 mm: flow rate of VTSA up to 1300 l/min, VTSA-F up to 1860 l/min
- Width 52 mm: valve flow rate up to 2900 l/min
- Widths 18 mm, 26 mm, 42 mm, 52 mm and 65 mm can be combined on a single valve terminal (using an adapter – not for VTSA-F-CB)

Valve terminal VTSA complies with

- ISO 15407-2 for width 18 and 26 mm
- ISO 5599-2 for width 42 and 52 mm

Key features

Valve terminal configurator

→ Internet: www.festo.com

General	VTSA	VTSA-F	VTSA-F-CB
A valve terminal configurator is available to help you select a suitable VTSA valve terminal, making it much easier to order the right product. The valve terminals are assembled according to your order specification and are individually checked. This reduces assembly and installation time to a minimum.	• Valve terminal to ISO 15407-2 and ISO 5599-2 (flow rate: standard). • Parallel communication between CPX module and switching valves VTSA	• Valve terminal, flow rate-optimised (interlinking blocks) (flow rate: increased). • Parallel communication between CPX module and switching valves VTSA	• Valve terminal: optimised in terms of flow rate and communication (flow rate: increased). • Serial communication between the CPX module and selected VTSA modules
	Order a valve terminal VTSA using the order code: Ordering system for VTSA → Internet: vtsa Ordering system for CPX → Internet: cpx	Order a valve terminal VTSA-F using the order code: Ordering system for VTSA-F → Internet: vtsa-f Ordering system for CPX → Internet: cpx	Order a valve terminal VTSA-F-CB using the order code: Ordering system for VTSA-F-CB → Internet: vtsa-f-cb Ordering system for CPX → Internet: cpx

Ordering data – Product options

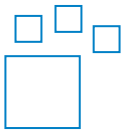

Configurable product
This product and all its product options can be ordered using the configurator.

The configurator can be found at
→ **www.festo.com/catalogue/...**
Enter the part number or the type.

Part no.	Type
539215	VTSA-MP
547963	VTSA-F-MP
539217	VTSA-FB
547965	VTSA-F-FB
555564	VTSA-ASI
555566	VTSA-F-ASI
8073100	VTSA-F-CB

Key features

Individual pneumatic connection

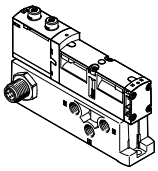

Valves on individual sub-bases up to width 52 mm can be used with actuators that are further away from the valve terminal.

The electrical connection is established either via a standardised 4-pin M12 plug 24 V DC (EN 61076-2-101), 4-pin spring-loaded terminal or a cable with open end 24 V DC, which are configured by the user.

Valve terminal with individual electrical connection

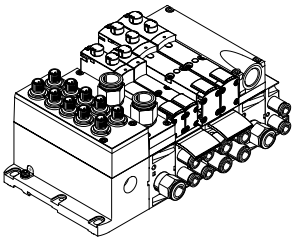

Control signals from the controller to the valve terminal are transmitted via an individual connecting cable.

The valve terminal can be equipped with max. 20 valves and max. 20 solenoid coils.

The electrical connection is established via a 5-pin M12 plug, 24 V DC.

Valve terminal with multi-pin plug connection

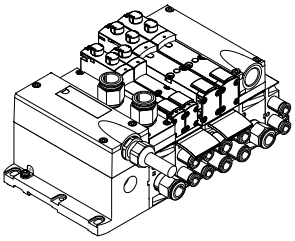

Control signals from the controller to the valve terminal are transmitted via a pre-assembled multi-wire cable or a self-assembled multi-pin plug connection (spring-loaded terminal). This substantially reduces installation time.

The valve terminal can be equipped with max. 32 valves and max. 32 solenoid coils.

Variants
- Multi-pin plug connection with terminal strip (spring-loaded terminal), 24 V DC
- Pre-assembled connecting cable, 24 V DC
- Sub-D plug connector for assembly by the user, 37-pin, 24 V DC
- Round plug M23, 19-pin, 24 V DC

AS-Interface connection

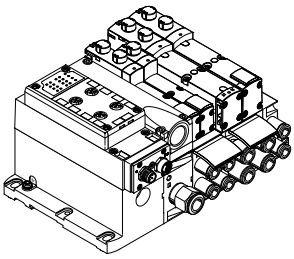

A special feature of the AS-Interface is the simultaneous transmission of data and supply power via a two-wire cable. The encoded cable profile prevents connection with incorrect polarity.
The valve terminal with AS-Interface is available in the following versions:

- With one to eight modular valve positions (max. 8 solenoid coils). This corresponds to one to eight valves VSVA.
- With all available valve functions

The connection technology used for the inputs can be selected as with CPX: M8, M12, Sub-D, spring-loaded terminal (terminals to IP20).

Further information
➔ Internet: as-interface

Note
The valve terminal VTSA/VTSA-F with AS-Interface connection is based on the same electrical links as the valve terminal with multi-pin plug connection. This means a valve terminal with multi-pin plug connection can be converted using an AS-Interface module (➔ page 150). The technical specifications of the AS-Interface system must be observed in this case.

➔ Page 72
➔ Internet: as-interface

Key features

Valve terminal with I-Port/IO-Link connection

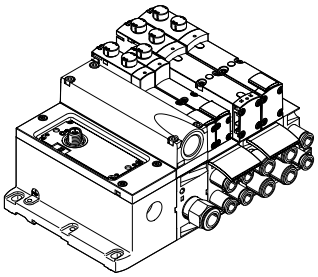

The connection to a higher-order controller can be achieved by:
- Connection to an I-Port master from Festo (e.g. CPX-CTEL)
- Direct mounting of a bus node on the I-Port interface
- Connection to an IO-Link master (in IO-Link mode)

The valve terminal can comprise a maximum of 32 solenoid coils or 16 valve positions.

Key features

Valve terminal with fieldbus interface from the CPX system

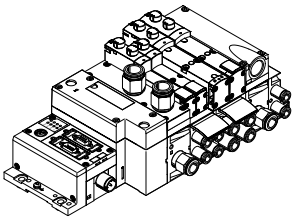

An integrated fieldbus node manages the communication connection with a higher-order PLC. This enables a space-saving pneumatic and electronic solution.
Valve terminals with fieldbus interfaces from the CPX system can be configured with up to 16 manifold sub-bases. With 2 solenoid coils per connection, up to 32 solenoid coils can thus be actuated.

There is an extended range of functions in combination with the CPX system and the smart valve terminal VTSA-F-CB:
- Serial communication in the pneumatic part
- Several voltage zones for load voltage of the valves in the pneumatic part
- Flexible shutdown of up to 3 voltage zones in the CPX interface, either internally with PROFIsafe or externally by 3x M12
- Flexible zoning for electrical and pneumatic sections, for decentralised control of various system/machine areas

VTSA/VTSA-F versions
- PROFIBUS
- INTERBUS
- DeviceNet
- CANopen
- CC-Link
- EtherNet/IP
- EtherCAT
- Modbus TCP
- PROFINET
- POWERLINK
- Sercos III
- IO-Link

VTSA-F-CB versions
- PROFIBUS
- EtherNet/IP
- EtherCAT
- PROFINET

➔ Internet: cpx

Valve terminal with control block connection from the CPX system

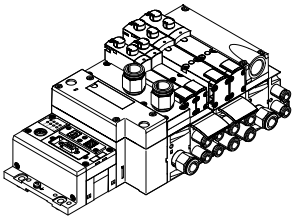

A controller integrated in the Festo valve terminal enables the construction of stand-alone control units with protection to IP65 without a control cabinet thanks to two different operating modes.

In the slave operating mode, these valve terminals can be used for intelligent preprocessing and are therefore ideal modules for designs using decentralised intelligence.

In the master operating mode, terminal groups can be designed with many options and functions that can autonomously control a medium-sized machine/system.

➔ Internet: cpx

CP string extension from the CPX system

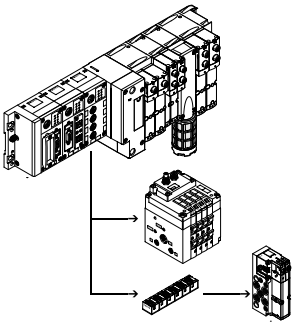

The optional CP string extension enables additional valve terminals and I/O modules to be connected to the fieldbus node of the CPX terminal on up to 4 CP strings. Different input and output modules as well as valve terminals MPA-S and CPV can be connected.

The maximum length of the CP string extension is 10 metres, which means that the extension modules can be mounted directly on-site. All the required electrical signals are transmitted via the CP cable, which in turn means that no further installation is needed on the extension module.

One CP string offers:
- 32 input signals
- 32 output signals for output stages 24 V DC or solenoid coils
- Logic and sensor supply for the input modules
- Load voltage supply for the valve terminals
- Logic supply for the output module

➔ Internet: cpi

Key features – Valves

Solenoid valve with switching position sensing for VTSA/VTSA-F/VTSA-F-CB, width 18 mm, 26 mm

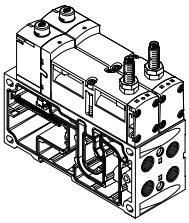

The 5/2-way single solenoid valve with spring return features switching position sensing.
The normal position of the piston spool is monitored.

It is available as a valve with plug-in or individual connection with pilot valves to ISO 15218 and square plug type C.
This valve is not a safety device in accordance with the Machinery Directive 2006/42/EC.

It is suitable for use in safety-related parts of control systems to EN ISO 13849-1.

➔ Page 155

Control block with safety function for VTSA/VTSA-F, width 26 mm

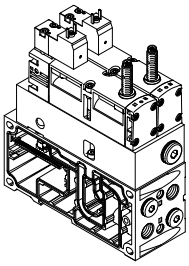

5/2-way solenoid valve
These valves are used for special applications, for example for:
- Protecting against unexpected start-up
- Safe reversing
- Drives in manually loaded machining jigs

This control block is suitable for use as a press safety valve to EN 962.

This valve is a safety device in accordance with the Machinery Directive 2006/42/EC.

➔ Page 166

Pilot air switching valve for VTSA/VTSA-F, width 18 mm, 26 mm

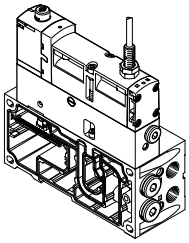

The pilot air switching valve is a combination of a 5/2-way solenoid valve with switching position sensing and the intermediate plate VABF-S4-...-S. It enables the pilot air supply to be verifiably switched on and off (sensing function) from duct 1 to 14 for the entire pressure zone or valve terminal.

Switching position sensing is carried out using an inductive PNP proximity switch with cable and 1xM12 push-in connector to EN 61076-2-104.

This valve is not a safety device in accordance with the Machinery Directive 2006/42/EC. It is suitable for use in safety-related parts of control systems to EN ISO 13849-1.

➔ Page 173

Note

The pilot air switching valve can only be operated on the valve terminal VTSA/VTSA-F in combination with a right end plate for external pilot air type VABE-S6-1RZ-.... Port 14 on the right end plate must then be sealed.

Key features – Valves

Pilot air switching valve for VTSA-F-CB with serial communication

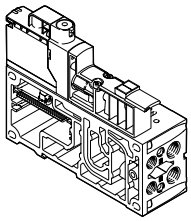

The pilot air switching valve is used for pressurising and exhausting duct 14 for one pressure zone, or the entire valve terminal VTSA-F-CB.
The pilot air switching valve enables additional functions in combination with the CPX system:

- Comprehensive diagnostics
- Transmission of analogue signals
- The elimination of cable connections between the pneumatic and electrical sections

In combination with the CPX system, an integrated pressure sensor and integrated feedback enable wireless detection of the status of the pilot air switching valve.
The pilot air switching valve can be used to realise the safety function "Protection against unexpected start-up".
The pilot air switching valve can be supplied with compressed air internally via the valve terminal or externally via duct 2.

The hybrid manifold sub-base can be equipped both with an 18 mm and a 26 mm solenoid valve.

This valve is not a safety device in accordance with the Machinery Directive 2006/42/EC.
It is suitable for use in safety-related parts of control systems to EN ISO 13849-1.

➔ Page 183

Soft-start valve for VTSA/VTSA-F, module width 43 mm

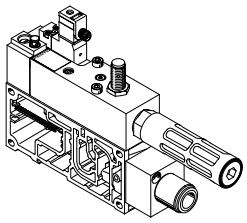

The soft-start valve is separately electrically actuated, independently of the multi-pin plug connection, AS-Interface or fieldbus interface, via a square plug of type C to EN 175301-803 or optionally via an M12 adapter.

The valve can optionally be ordered with a sensor that monitors switching of the soft-start valve. The soft-start valve can supply the valve terminal or one or more pressure zones with compressed air.

The pressure build-up for each pressure zone is optimised for the application directly at the valve terminal by setting the switch-over pressure and the filling time.
A maximum of 5 soft-start valves can thus be integrated on one valve terminal.

➔ Page 187

Soft-start valve for VTSA-F-CB with serial communication

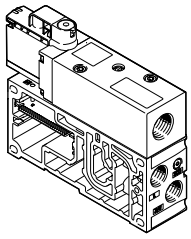

The soft-start valve pressurises/exhausts duct 1 (supply air) of the valve terminal, or one or more pressure zones.

The soft-start valve enables additional functions in combination with the CPX system:

- Comprehensive diagnostics
- Transmission of analogue signals
- The elimination of cable connections between the pneumatic and electrical sections of the CPX/VTSA-F-CB

In combination with the CPX system, an integrated pressure sensor and integrated feedback enable wireless detection of the status of the soft-start valve.
The filling time can be adjusted; the switch-over pressure is set to half the operating pressure. The pressure build-up for each pressure zone can thus be optimised for the application directly at the valve terminal.

This valve is not a safety device in accordance with the Machinery Directive 2006/42/EC.
It is suitable for use in safety-related parts of control systems to EN ISO 13849-1.

➔ Page 197

Key features – Valves

Vacuum block for VTSA-VTSA-F, module width 53 mm

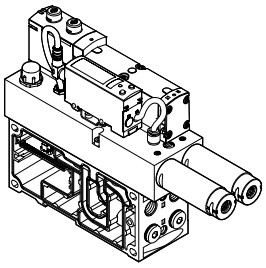

5/3-way solenoid valve, with switching position 12 retained.
The vacuum block is screwed to a manifold sub-base for 2 valve positions, width 26 mm, and thus integrated into the valve terminal VTSA/VTSA-F.

The vacuum block is supplied with power and the vacuum is sensed via a standardised 4-pin M12 plug.
The vacuum block is used in conjunction with a suction gripper to pick up, hold and place components. An adjustable ejector pulse is used for setting the components down.

The vacuum block is equipped with an air saving function.
If the electrical or pneumatic supply fails, the valve moves to switching position 12 "generate vacuum".

➔ Page 209

5/3-way solenoid valve for special functions

For holding, blocking a movement (mechanically)

5/3-way solenoid valve for special functions; port 2 is pressurised, port 4 exhausted. Switching position 14 is retained (code SA) or switching position 12 is retained (code SE).

Possible applications:
- Using lifting cylinders
- Using rotary cylinders

For pressureless switching, self-holding, pneumatic operation

5/3-way solenoid valve for special functions (3 phases). Mid-position is exhausted. Switching position 14 is retained (code SA) or switching position 12 is retained (code SE).

Possible applications:
- Pneumatic manual clamps for devices (inserting stations)

Integrated vacuum generator for VTSA-F-CB with serial communication

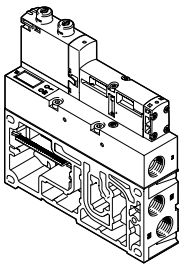

The vacuum generator in combination with the CPX/VTSA-F-CB and FMT (Festo Maintenance Tool) offers additional smart functions:

- Opening and saving of up to four records (on a local computer)
- Teach-in functionality: recording homing runs, gripping and holding the workpiece, and setting it down
- Preventive maintenance: measurement of all vacuum times, comparison with the homing run, warning message if a definable level of deviation is reached
- Locking the ejector pulse: either when a safety function (voltage zone with safe shut-off within the valve terminal) is requested or when there is a fault with the valve load voltage (e.g. undervoltage)
- Switching air-saving function on/off
- Changing the vacuum limits per data record

The vacuum generator is used in conjunction with a suction gripper to pick up, hold and place components. An adjustable ejector pulse is used for setting the components down.
➔ Page 214

Peripherals

Modular pneumatic peripherals

The modular design of the valve terminal VTSA/VTSA-F/VTSA-F-CB enables great flexibility right from the planning stage and offers maximum ease of service in operation.

The system consists of manifold sub-bases and valves.
The manifold sub-bases are screwed together and thus form the support system for the valves.

Inside the manifold sub-bases are the connection ducts for supplying compressed air to and exhausting the valve terminal as well as the working ports for the pneumatic cylinders for each valve.

Each manifold sub-base is connected to the next using four screws. Individual valve terminal sections can be isolated and further blocks easily inserted by loosening these screws. This ensures that the valve terminal can be rapidly and reliably extended.

Basic system modularity

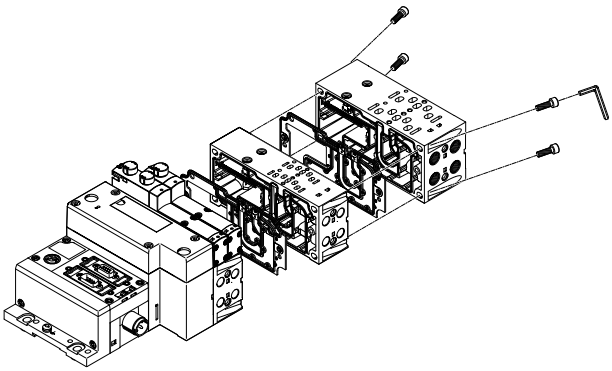

Valve modularity

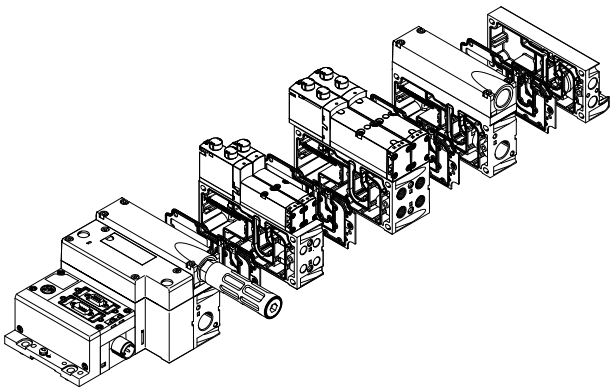

Vertical stacking modularity

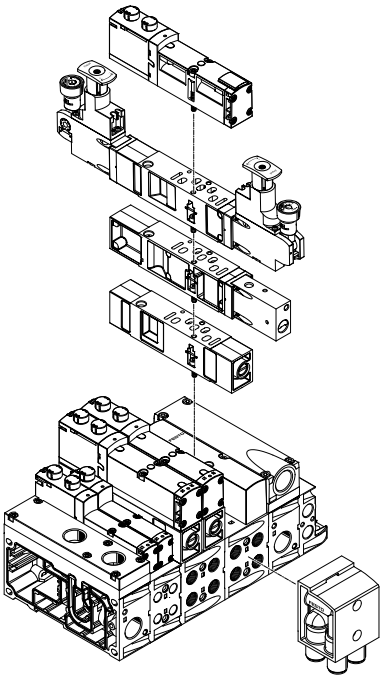

Note

See also "Adaptation to width 65 mm", ISO size 3
➔ page 226

Peripherals

Modular electrical peripherals

How the valves are actuated depends on whether a multi-pin terminal or fieldbus terminal is used.

The VTSA/VTSA-F with CPX interface is based on the internal bus system of the CPX and uses this communication system for all solenoid coils and a range of electrical input and output functions.

Parallel linking enables the following:
- Transmission of switching information
- Compact design
- Position-based diagnostics
- Separate power supply for valves
- Flexible conversion without address shifting
- Option of CP interface
- CPX-CEC as stand-alone controller with access via Ethernet and web server
- Transmission of status, parameter and diagnostic data
- ➔ Internet: cpx

VTSA/VTSA-F with electrical peripherals CPX

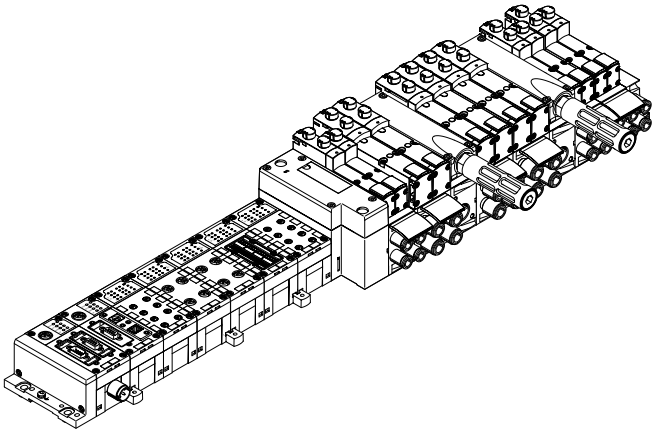

Modularity with electrical peripherals CPX

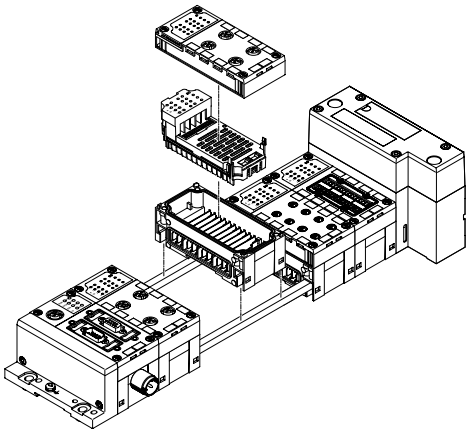

CPX terminal in metal design

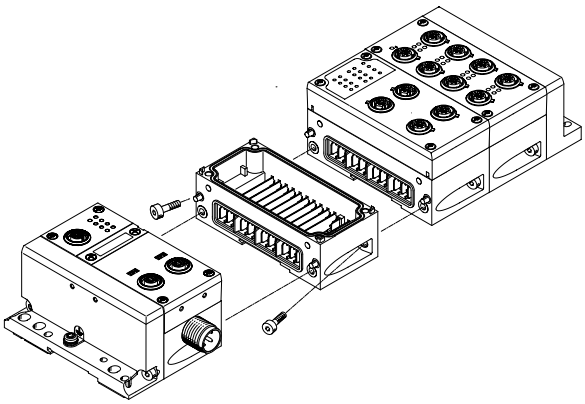

The mechanical connection between the metal CPX modules is created using special angled fittings.
The CPX terminal can thus be expanded at any time.

Note

The CPX manifold blocks are also available in metal. This means a complete solution in a sturdy metal design can be selected for applications of the valve terminal VTSA/VTSA-F/VTSA-F-CB in welding environments.

Peripherals – Pneumatic components

Valve terminal widths

Regardless of the type of control (e.g. multi-pin plug, fieldbus, etc.), valve terminals VTSA/VTSA-F of widths:

- 18 mm
- 26 mm
- 42 mm
- 52 mm

can be combined without adapters. These four widths can also be used without an adapter for the valve terminal VTSA-F-CB controlled via CPX.

This enables a flow range for the VTSA of:
400 l/min to 2900 l/min
for the VTSA-F of:
700 l/min to 2900 l/min
and for the VTSA-F-CB of:
700 l/min to 2900 l/min
to be covered on one valve terminal.

A wide range of valve functions and vertical stacking components are available for all widths.

Valves with a width of 65 mm can be mixed with other widths. However, these are only configured after the adapter plate VABA and are thus always at the end of the valve terminal configuration.

See "Adaptation to width 65 mm", ISO size 3
➔ page 226

The valve terminal VTSA-F-CB is controlled via the CPX pneumatic interface with serial communication.
The valve terminal VTSA-F-CB cannot be installed in combination with a valve terminal VTSA/VTSA-F.

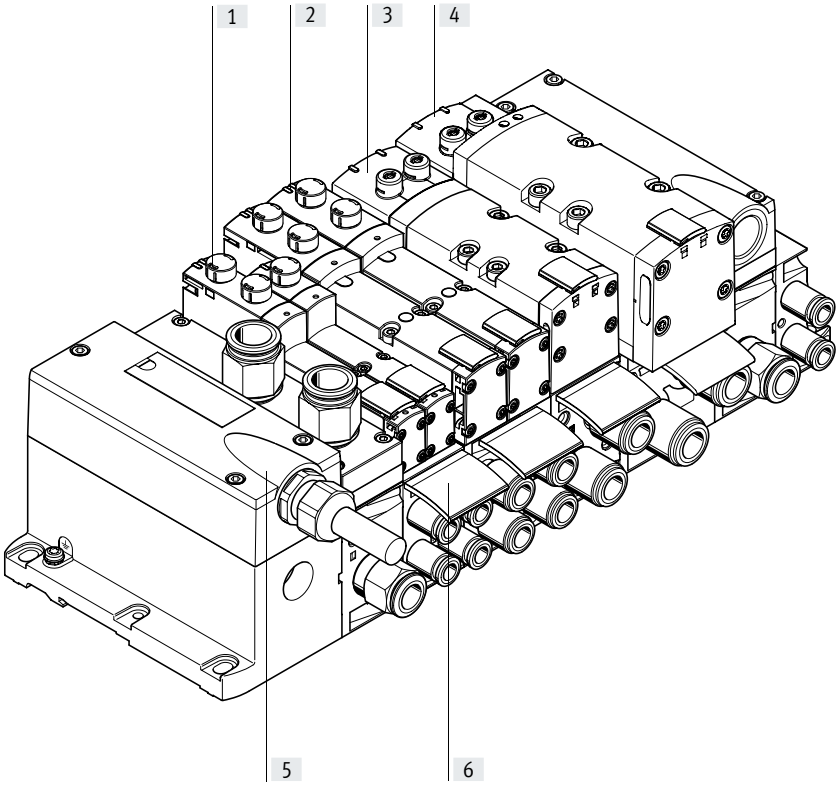

		Description	➔ Page/Internet
[1]	Valve	Width 18 mm	106
[2]	Valve	Width 26 mm	115
[3]	Valve	Width 42 mm	124
[4]	Valve	Width 52 mm	132
[5]	Multi-pin plug connection	With 24 V DC multi-pin cable (VTSA/VTSA-F only)	149
[6]	Inscription label	For manifold sub-base, sub-base, 90°-connection plate	154

Peripherals – Pneumatic components

Individual sub-base, width 18 mm, ISO 15407-2

Order code:
- Using individual part numbers

Individual sub-bases can be equipped with any valve.

The electrical connection is established via a standardised 4-pin M12 plug (EN 61076-2-101) or it can be configured by the user via a 4-pin clamped terminal connection/open cable end.

Width 18 mm with spring-loaded terminal or cable (open end)

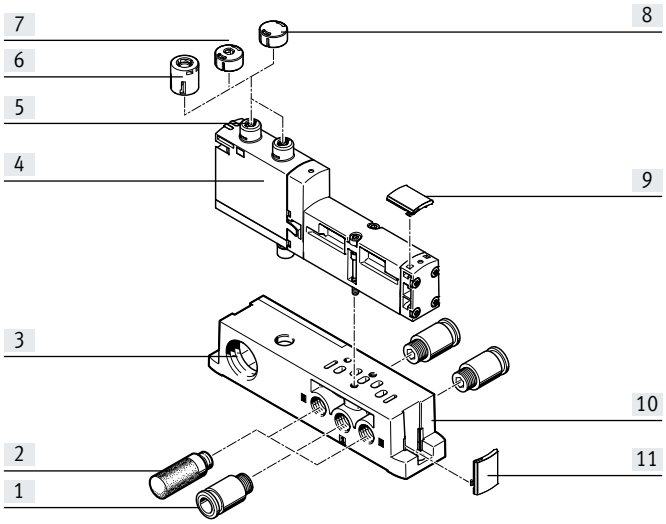

Width 18 mm with M12 plug

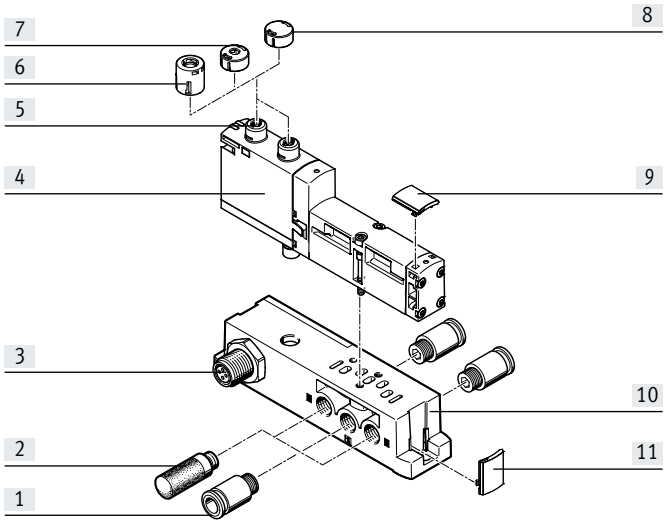

		Description	→ Page/Internet
[1]	Fitting	G1/8 for supply/exhaust air ports (1, 3, 5) and working ports (2, 4)	260
[2]	Silencers	U-1/8-B for exhaust ports (3, 5)	261
[3]	Electrical connection	Spring-loaded terminal, cable (open end) or M12 plug[1], 4-pin	–
[4]	Valve VSVA	Width 18 mm	106
[5]	Manual override	Non-detenting/detenting, per solenoid coil	–
[6]	Cover cap, heavy duty	For manual override, non-detenting heavy duty, detenting via accessory	153
[7]	Cover cap, coded	For non-detenting manual override (limited function)	153
[8]	Cover cap, concealed	MO concealed by cover cap – operation of MO prevented	153
[9]	Inscription label holders	For valves	154
[10]	Individual sub-base	For valve VSVA	258
[11]	Inscription label holders	For manifold block	154

1) Only for 24 V DC

Peripherals – Pneumatic components

Individual sub-base, width 26 mm, ISO 15407-2

With spring-loaded terminal or cable (open end)

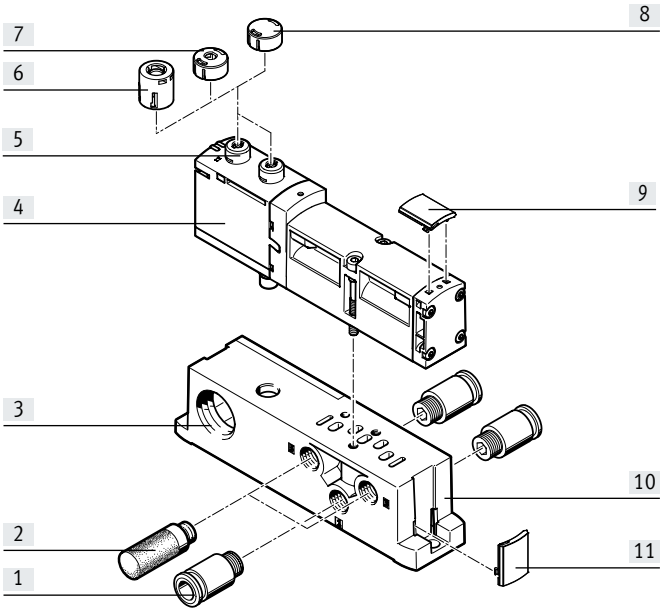

With M12 push-in connector

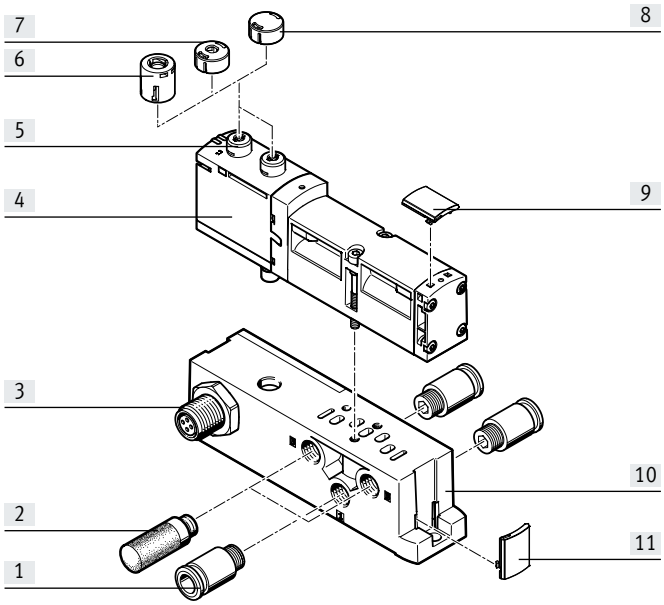

		Description	→ Page/Internet
[1]	Fitting	G1/4 for supply/exhaust air ports (1, 3, 5) and working ports (2, 4)	260
[2]	Silencers	U-1/4-B for exhaust ports (3, 5)	261
[3]	Electrical connection	Spring-loaded terminal, cable (open end) or M12 plug[1], 4-pin	–
[4]	Valve VSVA	Width 26 mm	115
[5]	Manual override	Non-detenting/detenting, per solenoid coil	–
[6]	Cover cap, heavy duty	For manual override, non-detenting heavy duty, detenting via accessory	153
[7]	Cover cap, coded	For non-detenting manual override (limited function)	153
[8]	Cover cap, concealed	MO concealed by cover cap – operation of MO prevented	153
[9]	Inscription label holders	For valves	154
[10]	Individual sub-base	For valve VSVA	258
[11]	Inscription label holders	For manifold block	154

1) Only for 24 V DC

Peripherals – Pneumatic components

Individual sub-base, width 42 mm, ISO 5599-2

With spring-loaded terminal or cable (open end)

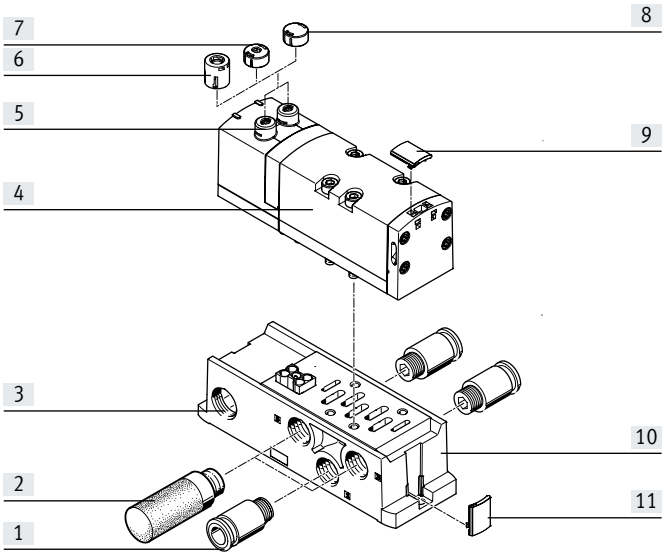

With M12 plug

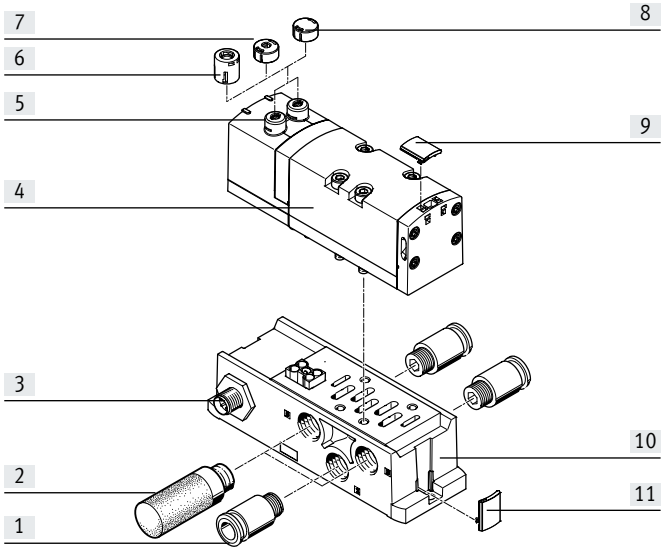

		Description	→ Page/Internet
[1]	Fitting	G3/8 for supply/exhaust air ports (1, 3, 5) and working ports (2, 4)	260
[2]	Silencers	U-3/8-B for exhaust ports (3, 5)	261
[3]	Electrical connection	Spring-loaded terminal, cable (open end) or M12 plug[1], 4-pin	–
[4]	Valve VSVA	Width 42 mm	124
[5]	Manual override	Non-detenting/detenting, per solenoid coil	–
[6]	Cover cap, heavy duty	For manual override, non-detenting heavy duty, detenting via accessory	153
[7]	Cover cap, coded	For non-detenting manual override (limited function)	153
[8]	Cover cap, concealed	MO concealed by cover cap – operation of MO prevented	153
[9]	Inscription label holders	For valves	154
[10]	Individual sub-base	For valve VSVA	258
[11]	Inscription label holders	For manifold block	154

1) Only for 24 V DC

Peripherals – Pneumatic components

Individual sub-base, width 52 mm, ISO 5599-2

With spring-loaded terminal or cable (open end)

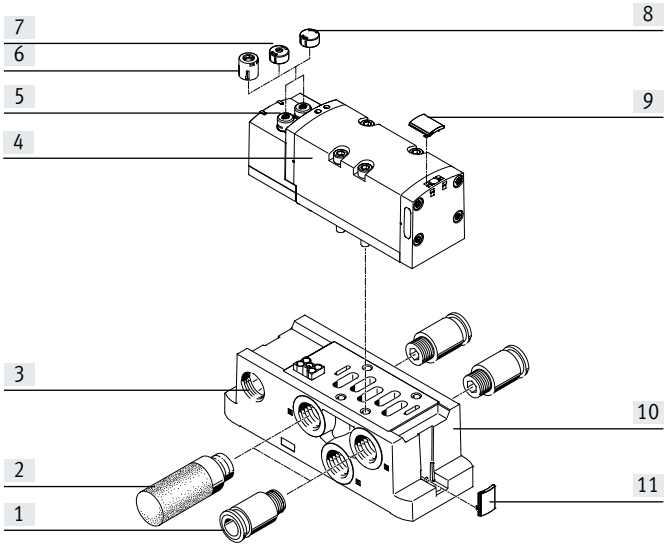

With M12 plug

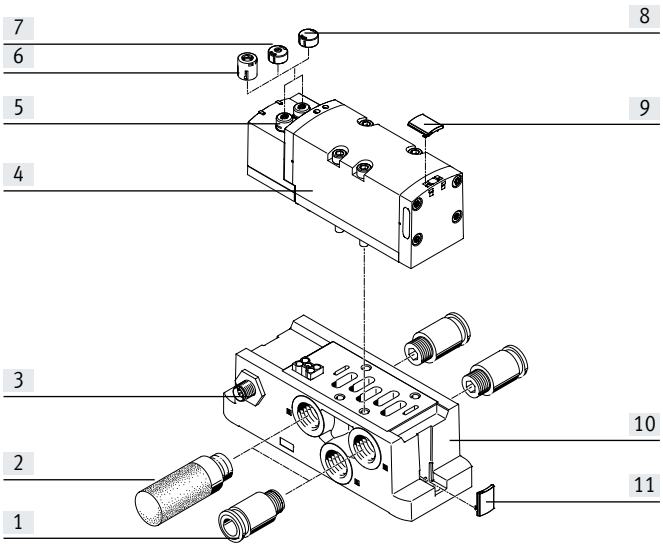

		Description	→ Page/Internet
[1]	Fitting	G1/2 for supply/exhaust air ports (1, 3, 5) and working ports (2, 4)	260
[2]	Silencers	U-1/2-B for exhaust ports (3, 5)	261
[3]	Electrical connection	Spring-loaded terminal, cable (open end) or M12 plug[1], 4-pin	–
[4]	Valve VSVA	Width 52 mm	132
[5]	Manual override	Non-detenting/detenting, per solenoid coil	–
[6]	Cover cap, heavy duty	For manual override, non-detenting heavy duty, detenting via accessory	153
[7]	Cover cap, coded	For non-detenting manual override (limited function)	153
[8]	Cover cap, concealed	MO concealed by cover cap – operation of MO prevented	153
[9]	Inscription label holders	For valves	154
[10]	Individual sub-base	For valve VSVA	258
[11]	Inscription label holders	For manifold block	154

1) Only for 24 V DC

Peripherals – Pneumatic components

Pneumatic components of valve terminal VTSA/VTSA-F

The conventional manifold sub-bases for valves with a width of 18 or 26 mm are either suitable for
- 2 single solenoid valves or
- 2 double solenoid valves

The manifold sub-bases for valves with a width of 42 or 52 mm are suitable for:
- 1 single solenoid valve or
- 1 double solenoid valve
- Double solenoid valve positions can be equipped with any valve or a cover plate.
- Single solenoid valve positions can only be equipped with single solenoid valves or a cover plate.

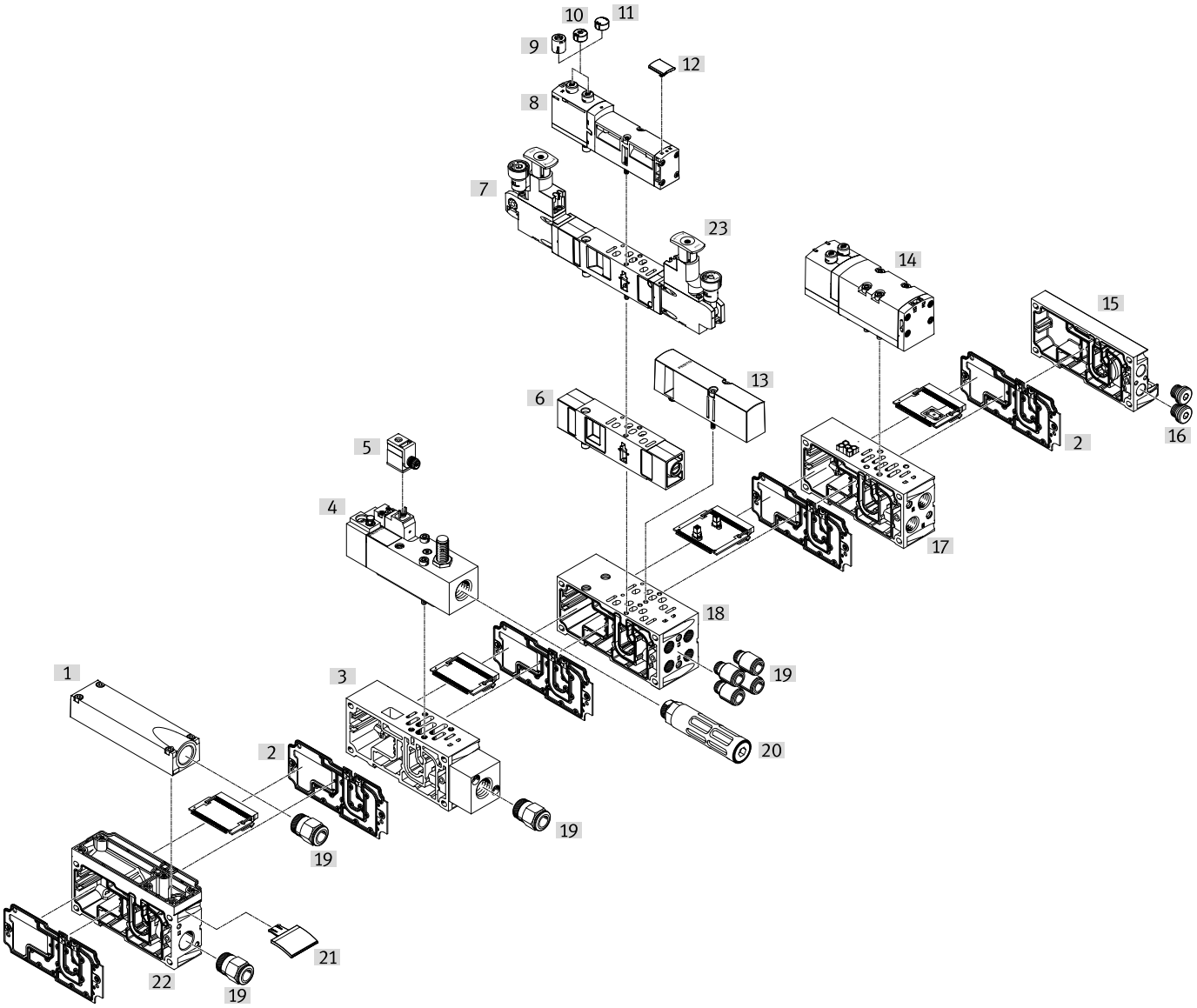

Peripherals – Pneumatic components

Pneumatic components of valve terminal VTSA/VTSA-F			
		Description	→ Page/Internet
[1]	Exhaust port cover	For ducted exhaust air (ports 3 and 5 combined)	141
[2]	Duct separation/seal	–	153
[3]	Manifold sub-base	For soft-start valve	195
[4]	Soft-start valve	For slow and safe pressure build-up	187
[5]	Plug socket	–	196
[6]	Throttle plate	–	147
[7]	Pressure regulator plate	–	142
[8]	Valve	Width 18 mm or 26 mm	106, 115
[9]	Cover cap, heavy duty	For manual override, non-detenting heavy duty, detenting via accessory	153
[10]	Cover cap, coded	For non-detenting manual override (limited function)	153
[11]	Cover cap, concealed	MO concealed by cover cap – operation of MO prevented	153
[12]	Inscription label holders	For valve	154
[13]	Cover plate	For unused valve position (vacant position)	147
[14]	Valve	Width 42 mm or 52 mm	124, 132
[15]	End plate with pilot air selector	–	152
[16]	Blanking plug	–	261
[17]	Manifold sub-base VTSA	For valves with a width of 42 mm or 52 mm	140
[17]	Manifold sub-base VTSA-F	For valves with a width of 42 mm or 52 mm	140
[18]	Manifold sub-base VTSA	For valves with a width of 18 mm or 26 mm	140
[18]	Manifold sub-base VTSA-F	For valves with a width of 18 mm or 26 mm	140
[19]	Fittings	–	260
[20]	Silencers	–	261
[21]	Inscription label holders	For manifold sub-base, sub-base, 90°-connection plate	154
[22]	Supply plate	–	141
[23]	Control element	Regulator knobs in different versions	39

Note

Special applications for the valve terminal, such as:

- Solenoid valve with switching position sensing
- Control block with safety function
- Pilot air switching valve
- Soft-start valve
- Vacuum block

are listed after → Accessories – General

Peripherals – Pneumatic components

Pneumatic components of valve terminal VTSA-F-CB

The conventional manifold sub-bases for valves with a width of 18 or 26 mm are either suitable for
- 2 single solenoid valves or
- 2 double solenoid valves

.

The hybrid manifold sub-base (with CBUS loop-through) makes it possible to use
- 1 double solenoid valve (18 mm) and
- 1 double solenoid valve (26 mm)

together on the same manifold sub-base.

The manifold sub-bases for valves with a width of 42 or 52 mm are suitable for:
- 1 single solenoid valve or
- 1 double solenoid valve

- Double solenoid valve positions can be equipped with any valve or a cover plate.
- Single solenoid valve positions can only be equipped with single solenoid valves or a cover plate.

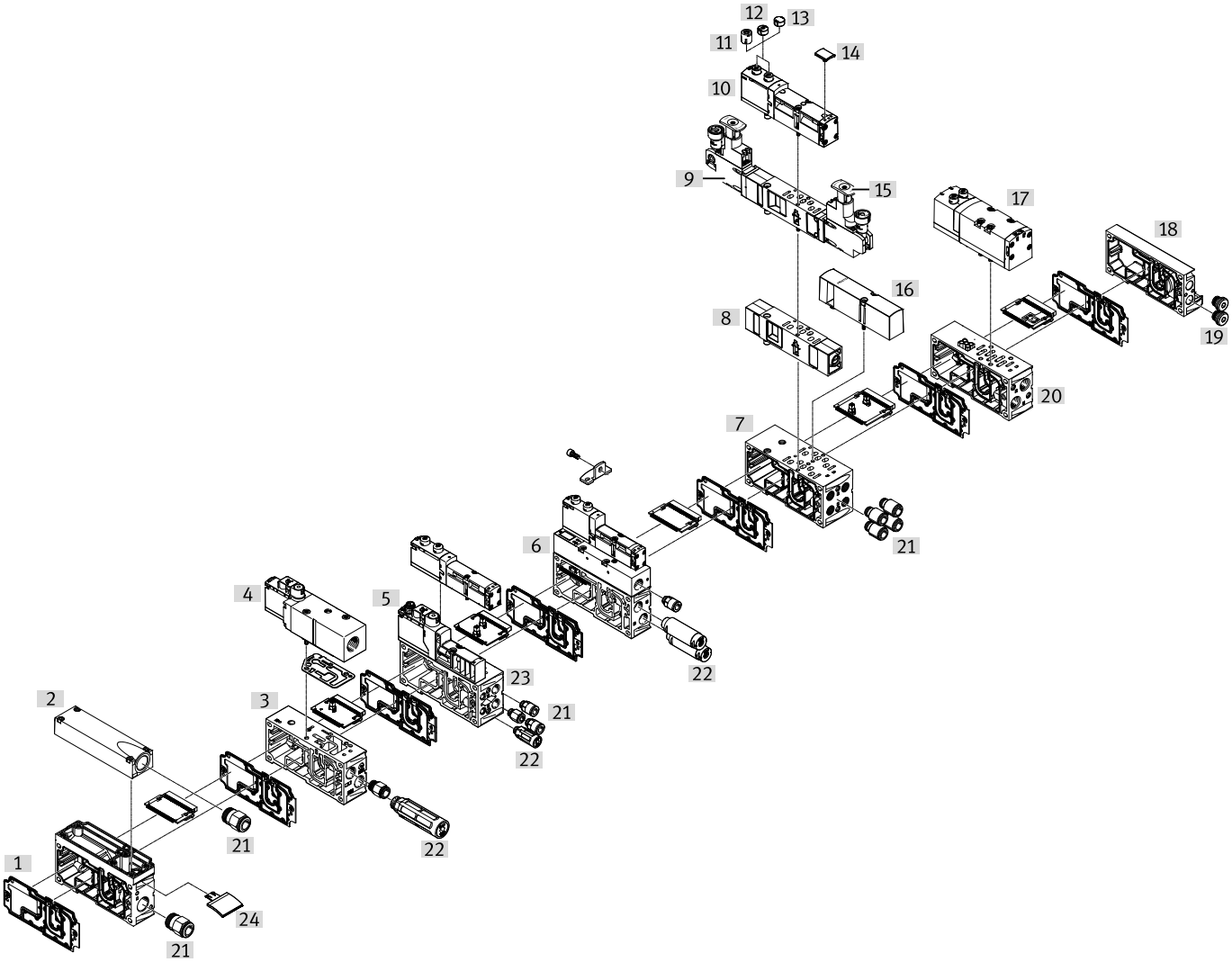

Peripherals – Pneumatic components

Pneumatic components of valve terminal VTSA-F-CB			
		Description	→ Page/Internet
[1]	Duct separation/seal	–	153
[2]	Exhaust port cover	For ducted exhaust air (ports 3 and 5 combined)	141
[3]	Manifold sub-base	For soft-start valve	202
[4]	Soft-start valve for VTSA-F-CB	For slow and safe pressure build-up	197
[5]	Pilot air switching valve for VTSA-F-CB	–	183
[6]	Vacuum generator for VTSA-F-CB	For vacuum generation	214
[7]	Manifold sub-base VTSA-F-CB	For valves with a width of 18 mm or 26 mm with CBUS loop-through	140
[8]	Throttle plate	–	147
[9]	Pressure regulator plate	–	142
[10]	Valve	Width 18 mm or 26 mm	106, 115
[11]	Cover cap, heavy duty	For manual override, non-detenting heavy duty, detenting via accessory	153
[12]	Cover cap, coded	For non-detenting manual override (limited function)	153
[13]	Cover cap, concealed	MO concealed by cover cap – operation of MO prevented	153
[14]	Inscription label holders	For valve	154
[15]	Control element	Regulator knobs in different versions	39
[16]	Cover plate	For unused valve position (vacant position)	147
[17]	Valve	Width 42 mm or 52 mm	124, 132
[18]	End plate with pilot air selector	–	152
[19]	Blanking plug	–	261
[20]	Manifold sub-base VTSA-F-CB	For valves with a width of 18 mm or 26 mm with CBUS loop-through	140
[21]	Fittings	–	260
[22]	Silencers	–	261
[23]	Manifold sub-base VTSA-F-CB	For pilot air switching valve (hybrid sub-base)	140
[24]	Inscription label holders	For manifold sub-base, sub-base, 90°-connection plate	154
[25]	Supply plate/air supply plate	–	141

Note

Special applications for the valve terminal, such as:

- Solenoid valve with switching position sensing
- Control block with safety function
- Pilot air switching valve
- Soft-start valve
- Vacuum generators

are listed after → Accessories – General

Peripherals – Electric components

Valve terminal with individual electrical connection

Order code for VTSA:
- 44E-... for the electric components
- 44P-... for the pneumatic components

Order code for VTSA-F:
- 45E-... for the electric components
- 45P-... for the pneumatic components

Valve terminals VTSA/VTSA-F with individual electrical connection can be expanded with up to 20 valves with max. 20 solenoid coils.
The manifold sub-bases for valves with a width of 18 or 26 mm are suitable for either
- 2 single solenoid valves or
- 2 double solenoid valves

and the manifold sub-bases for valves with a width of 42, 52 and 65 mm are suitable for
- 1 single solenoid valve or
- 1 double solenoid valve

- Double solenoid valve positions can be equipped with any valve or a cover plate.
- Single solenoid valve positions can only be equipped with single solenoid valves or a cover plate.
- The electrical connection is established via a 5-pin M12 plug (24 V DC).

- Valves with a width of 65 mm cannot be mixed with other widths – these are always at the end of the valve terminal configuration. See "Adaptation to width 65 mm", ISO size 3

➔ Page 226

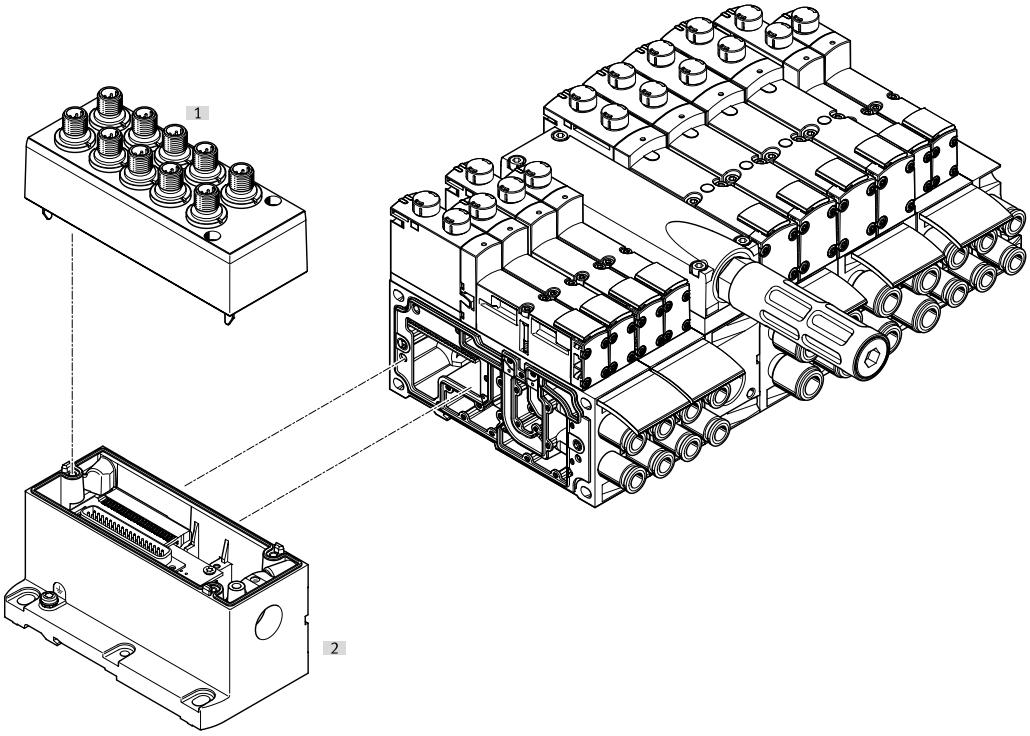

		Description	➔ Page/Internet
[1]	Cover	For individual connection	149
[2]	Multi-pin plug connection	Individual connection with M12, 10-way or 6-way (including cover)	149

Peripherals – Electric components

Valve terminal with electrical multi-pin plug connection

Order code for VTSA:
- 44E-... for the electric components
- 44P-... for the pneumatic components

Order code for VTSA-F:
- 45E-... for the electric components
- 45P-... for the pneumatic components

Valve terminals VTSA/VTSA-F with multi-pin plug connection can be expanded with up to 32 valves with max. 32 solenoid coils. The manifold sub-bases for valves with a width of 18 or 26 mm are prepared for
- 2 single solenoid valves or
- 2 double solenoid valves

and the manifold sub-bases for valves with a width of 42, 52 and 65 mm are suitable for
- 1 single solenoid valve or
- 1 double solenoid valve

- Double solenoid valve positions can be equipped with any valve or a cover plate.
- Single solenoid valve positions can only be equipped with single solenoid valves or a cover plate.
- The following multi-pin plug connections to IP65 are available:
- 37-pin Sub-D connection (24 V DC): the connecting cable can be ordered in lengths of 2.5 m, 5 m and 10 m for max. 8, 22 or 32 solenoid coils respectively.
- Terminal strip (24 V DC), 19-pin round plug (24 V DC)
- Valves with a width of 65 mm cannot be mixed with other widths – these are always at the end of the valve terminal configuration. See "Adaptation to width 65 mm", ISO size 3

➔ Page 226

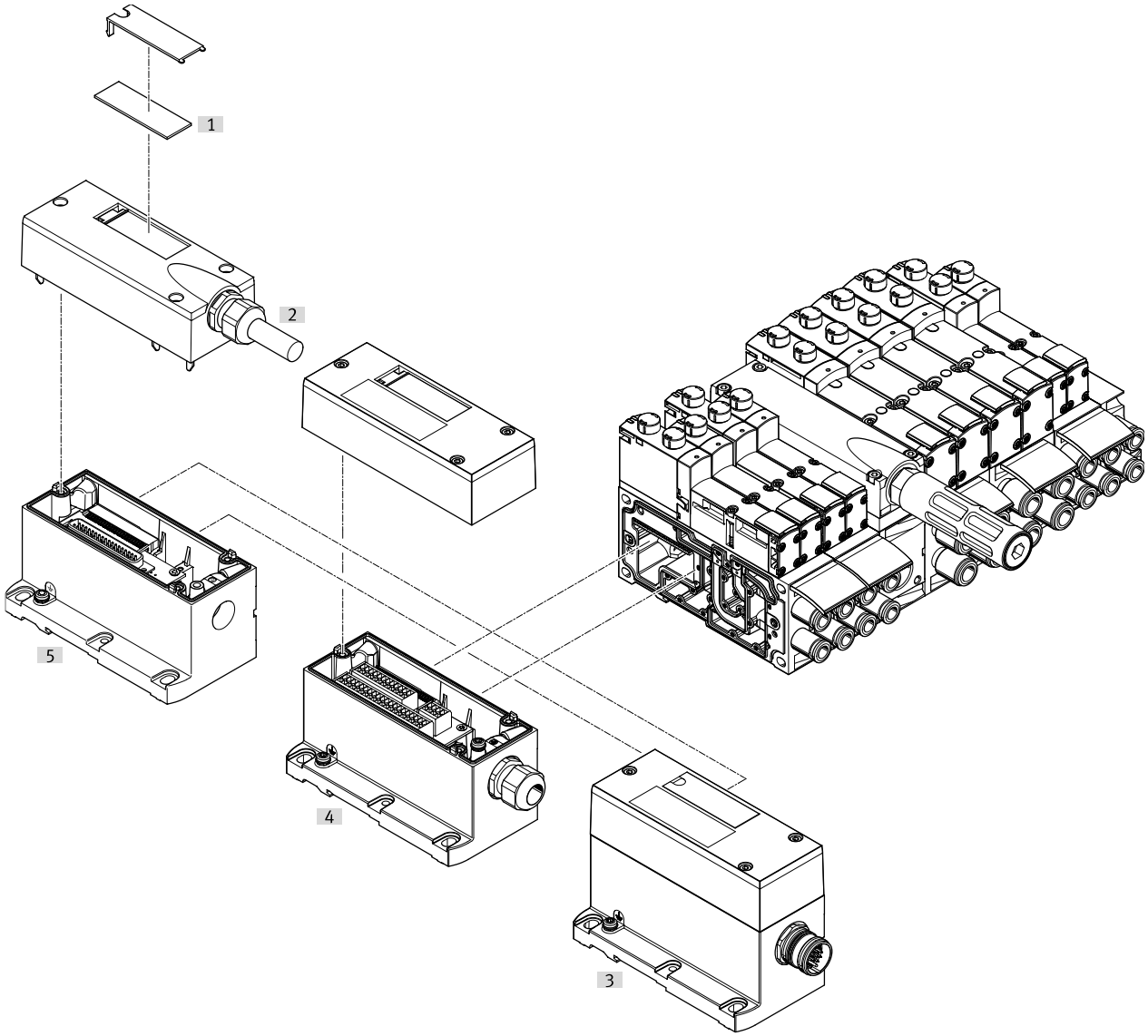

		Description	➔ Page/Internet
[1]	Inscription label	Large, for multi-pin plug connection	–
[2]	Multi-pin cable	Connecting cable	152
[3]	Multi-pin plug connection	Via M23 round plug connection, 24 V DC	149
[4]	Multi-pin plug connection	Via terminal strip (CageClamp) 24 V DC	149
[5]	Multi-pin plug connection	Via multi-pin cable, 24 V DC	149

Peripherals – Electric components

Valve terminal with AS-Interface connection

Order code for VTSA:
- 52E-... for the electric components
- 44P-... for the pneumatic components

Order code for VTSA-F:
- 52E-... for the electric components
- 45P-... for the pneumatic components

Valve terminals VTSA/VTSA-F with AS-Interface connection can be expanded with up to 8 valves with max. 8 solenoid coils.
The manifold sub-bases for valves with a width of 18 or 26 mm are suitable for either
- 2 single solenoid valves or
- 2 double solenoid valves

and the manifold sub-bases for valves with a width of 42, 52 and 65 mm are suitable for
- 1 single solenoid valve or
- 1 double solenoid valve

.

- Double solenoid valve positions can be equipped with any valve or a cover plate.
- Single solenoid valve positions can only be equipped with single solenoid valves or a cover plate.

- Valves with a width of 65 mm cannot be mixed with other widths – these are always at the end of the valve terminal configuration. See "Adaptation to width 65 mm", ISO size 3

➔ Page 226

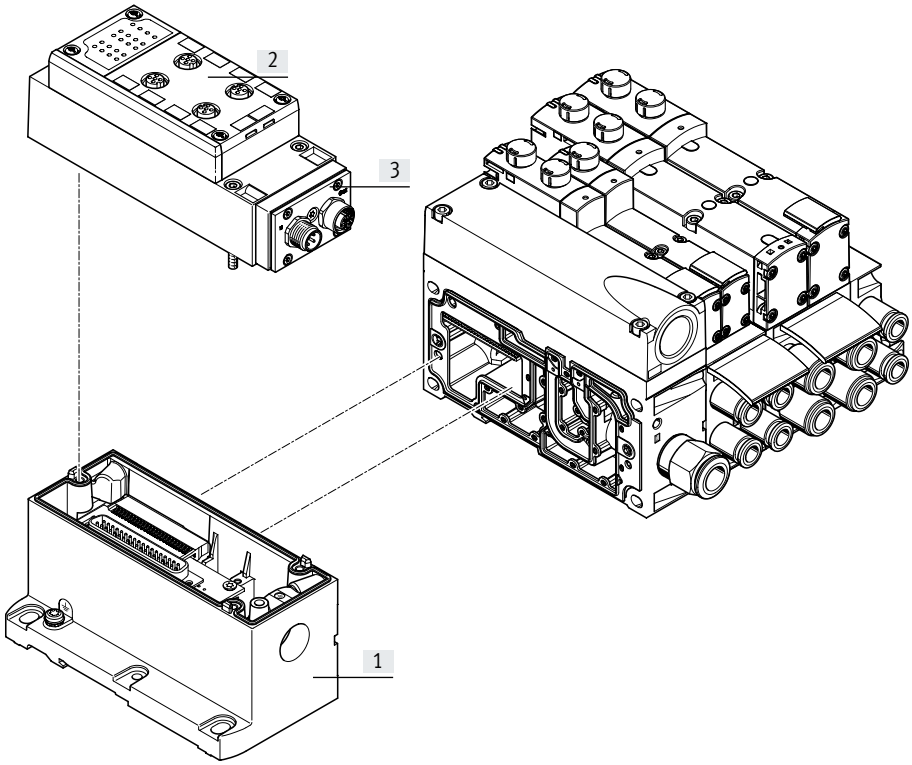

		Description	➔ Page/Internet
[1]	Multi-pin plug connection	Can be ordered together with the AS-Interface module as an electrical connection for AS-Interface	150
[2]	Connection block for AS-Interface	–	150
[3]	AS-Interface module	–	150

Peripherals – Electrical components

Valve terminal with I-Port/IO-Link connection

Order code for VTSA:
- 44E-... for the electrical components
- 44P-... for the pneumatic components

Order code for VTSA-F:
- 45E-... for the electrical components
- 45P-... for the pneumatic components

Valve terminals VTSA/VTSA-F with I-Port/IO-Link connection can be expanded with up to 16 valves with max. 32 solenoid coils. The manifold sub-bases for valves with a width of 18 or 26 mm are suitable for either
- 2 single solenoid valves or
- 2 double solenoid valves

and the manifold sub-bases for valves with a width of 42 or 52mm are suitable for
- 1 single solenoid valve or
- 1 double solenoid valve

depending on the size.

- Double solenoid valve positions can be equipped with any valve or a cover plate.
- Single solenoid valve positions can only be equipped with single solenoid valves or a cover plate.

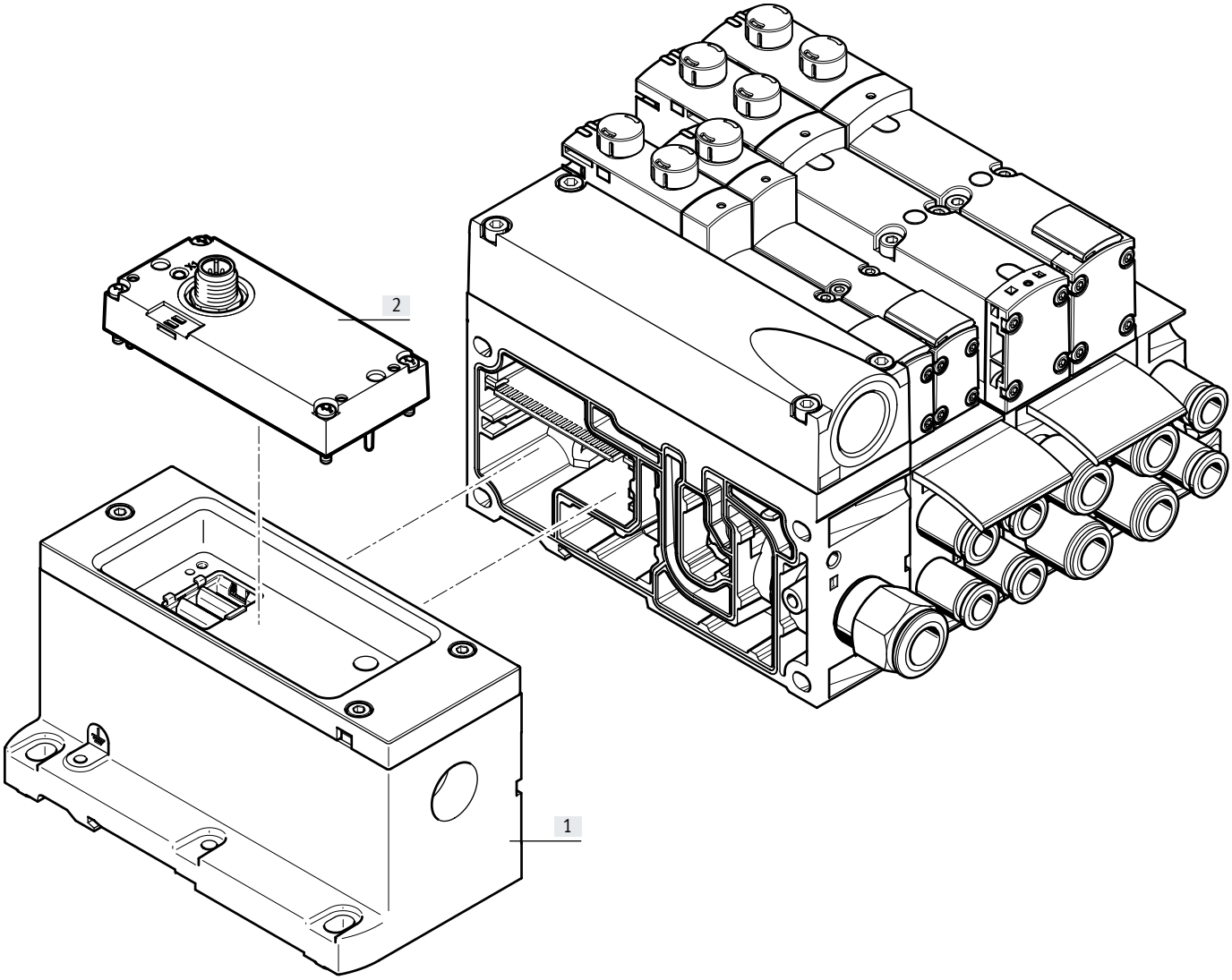

		Description	→ Page/Internet
[1]	Multi-pin plug connection	–	149
[2]	I-Port/IO-Link connection	Electrical interface IO-Link	150

Peripherals – Electric components

Valve terminal with fieldbus interface, control block (electrical peripherals CPX)

Order code:
- 50E-... for the electrical peripherals, polymer variant
- 51E-... for the electrical peripherals, metal variant
- 53E-... for the electrical peripherals, for control cabinet installation

For VTSA:
- 44P-... for the pneumatic components

For VTSA-F:
- 45P-... for the pneumatic components

For VTSA-F-CB:
- 46P-... for the pneumatic components

Valve terminals VTSA/VTSA-F with parallel communication and fieldbus interface can be expanded with up to 32 valves with max. 32 solenoid coils.
The manifold sub-bases for valves with a width of 18 or 26 mm are suitable for either
- 2 single solenoid valves or
- 2 double solenoid valves

and the manifold sub-bases for valves with a width of 42, 52 and 65 mm are suitable for
- 1 single solenoid valve or
- 1 double solenoid valve

.
- Double solenoid valve positions can be equipped with any valve or a cover plate.
- Single solenoid valve positions can only be equipped with single solenoid valves or a cover plate.

The valve terminal VTSA-F-CB with serial communication can be expanded with up to 96 valves with max. 96 solenoid coils.
4 zones can be equipped with max. 24 valves/solenoid coils.
Each valve position can be equipped with any valve or a cover plate. The rules for CPX apply to the equipment that can be used with the electrical peripherals CPX.

In general:
- Max. 10 electrical modules
- Digital inputs/outputs
- Analogue inputs/outputs
- Parameterisation of inputs and outputs
- Integrated, convenient diagnostics
- Preventive maintenance concepts
- Valves with a width of 65 mm cannot be mixed with other widths – these are always at the end of the valve terminal configuration. See "Adaptation to width 65 mm", ISO size 3

➔ Page 226

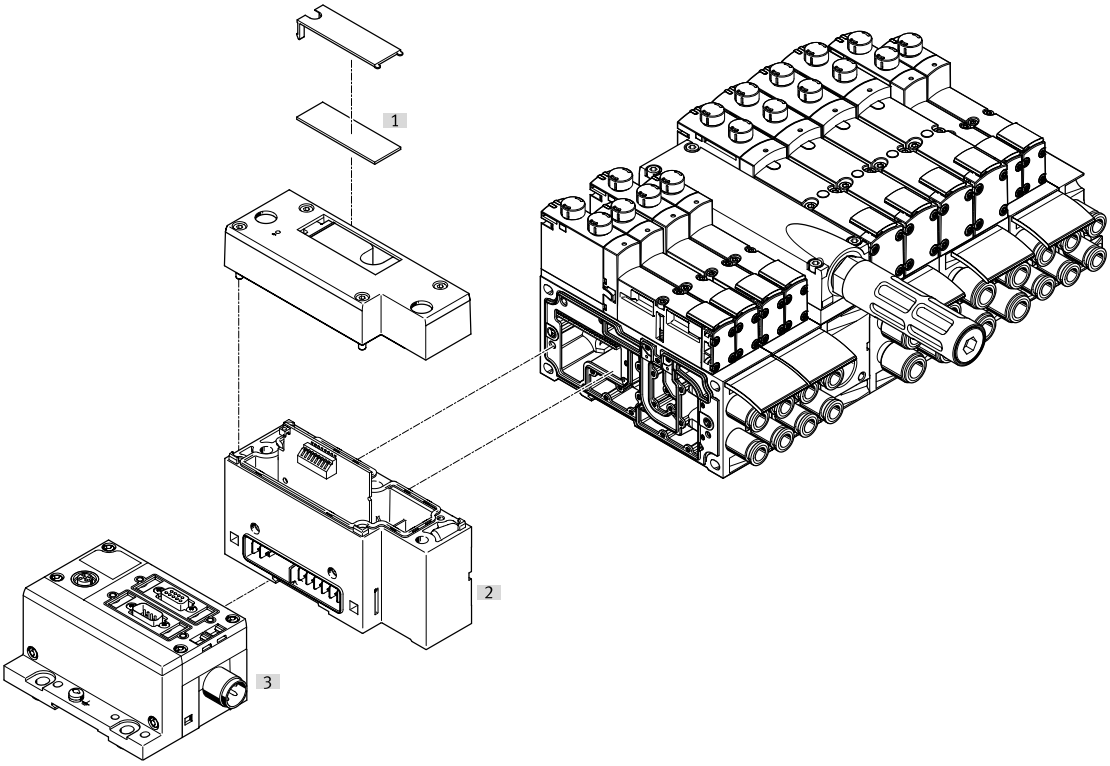

		Description	➔ Page/Internet
[1]	Inscription label	Large, for pneumatic interface CPX	–
[2]	Pneumatic interface	–	149
[3]	Fieldbus interface	–	cpx

Peripherals – Electric components

Valve terminal with fieldbus/multi-pin plug connection and individually electrically actuated valve

In applications with specific emergency off conditions, it may be necessary to switch one or more valves separately from the valve terminal controller. Standard valves (VSVA) with individual electrical connection (round or square plug) are therefore mounted on the valve terminal.

In order for degree of protection IP65 to be achieved, the functionless opening in the sub-base for the electrical connection must be sealed.

A sealing cap is available for width 18 mm and 26 mm. With manifold or individual sub-bases, valves with width 42 mm and 52 mm must be used with a seal to comply with the IP degree of protection (see ➔ page 147).

For centrally controlling the valve terminal via a multi-pin plug connection or fieldbus interface, the occupied valve position acts like a vacant position, i.e. the assigned address in the fieldbus node or the corresponding connection in the multi-pin plug connection is occupied.

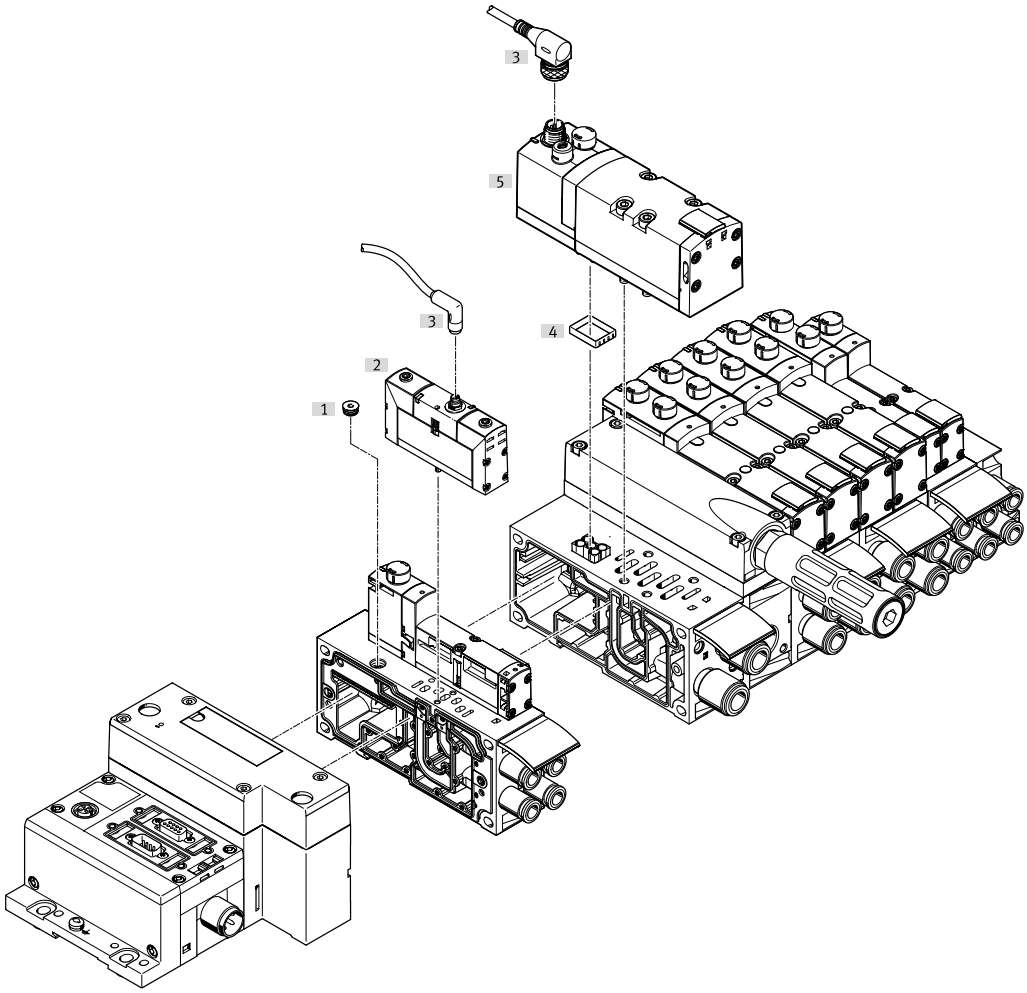

		Description	➔ Page/Internet
[1]	Sealing cap	For sealing the electrical connection on the sub-base	147
[2]	Valve	Width 18 mm or width 26 mm	valves vsva
[3]	Connecting cable	–	valves vsva
[4]	Seal	For ensuring the IP degree of protection (with width 42 mm and 52 mm)	148
[5]	Valve	Width 42 mm or width 52 mm	valves vsva

Note

Standard valves VSVA can be used on the valve terminal. A vacant position must be provided for this in the valve terminal configurator. The appropriate standard valve VSVA can be ordered on the Internet at:
➔ vsva

Key features – Pneumatic components

Manifold sub-base

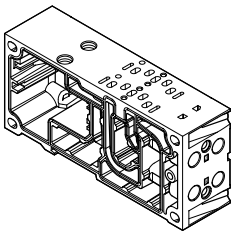

VTSA/VTSA-F with parallel communication is based on a modular system which consists of manifold sub-bases and valves.
The VTSA-F manifold sub-bases are designed to optimise the flow rate.

Manifold sub-bases are available for valve widths 18 mm and 26 mm in a double grid, i.e. two valves per manifold sub-base.

For VTSA-F-CB with serial communication, there are manifold sub-bases available for valve widths 18 mm and 26 mm in a double grid, as well as hybrid manifold sub-bases. Valves of width 18 mm and 26 mm can be used together on a hybrid manifold sub-base.

For valves with a width of 42 mm or 52 mm, there are manifold sub-bases with one valve per sub-base. The manifold sub-base contains a duct seal and an electric interlinking module. They can be freely mixed within a valve terminal.
The manifold sub-bases are screwed together and thus form the support system for the valves. Inside the manifold sub-bases are the connection ducts for supplying compressed air to and exhausting the valve terminal as well as the working ports for the pneumatic cylinders for each valve.

Each manifold sub-base is connected to the next using four screws. Individual valve terminal sections can be isolated and further manifold sub-bases can be inserted by loosening these screws. This ensures that the valve terminal can be rapidly and reliably extended.

See also "Adaptation to width 65 mm", ISO size 3
➔ Page 226)

Port patterns to ISO 15407-2

Width 18 mm (size 02)

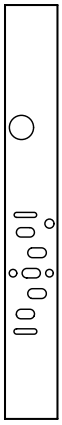

Width 26 mm (size 01)

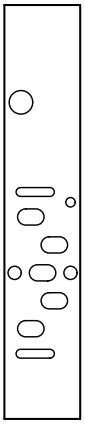

Port patterns to ISO 5599-2

Width 42 mm (size 1)

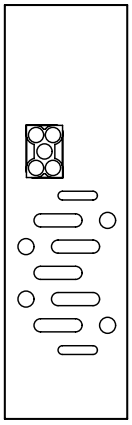

Width 52 mm (size 2)

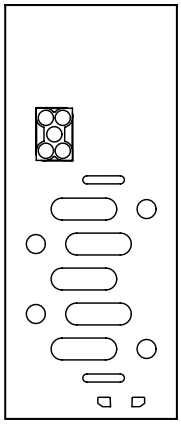

Key features – Pneumatic components

Port patterns – High-flow sub-bases with optimised flow rate (no standard)

Width 18 mm	Width 26 mm	Width 42 mm
	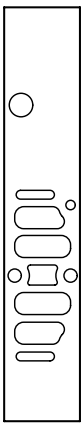	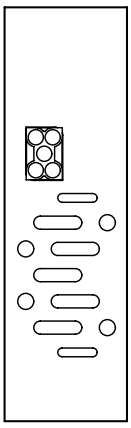

Hybrid sub-base for VTSA-F-CB:

Width 18 mm + 26 mm

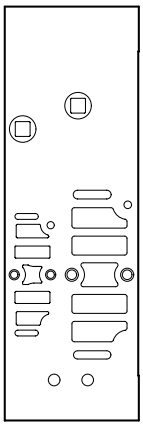

Note

The illustrations shown represent the pneumatic port patterns.

The port patterns on the valve terminal VTSA-F/VTSA-F-CB and the hybrid sub-base do not correspond to the ISO standard.

Key features – Pneumatic components

Manifold sub-base variants with QS fitting, valve terminal VTSA									
Code		Type	Width				No. of valve positions (solenoid coils)[1]	Working ports (2, 4)	
			18 mm	26 mm	42 mm	52 mm		Code M Large	Code N Small
Manifold sub-base for double solenoid valves									
A	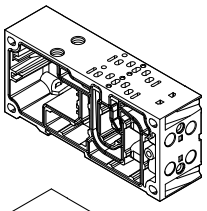	VABV-S4-2S-G18-2T2	■	–	–	–	2 (4)	QS-G1/8-8	–
AK								–	QS-G1/8-6
B		VABV-S4-1S-G14-2T2	–	■	–	–	2 (4)	QS-G1/4-10	–
BK								–	QS-G1/4-8
C	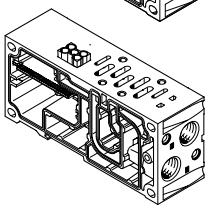	VABV-S2-1S-G38-T2	–	–	■	–	1 (2)	QS-G3/8-12	–
CK								–	QS-G3/8-10
D		VABV-S2-2S-G12-T2	–	–	–	■	1 (2)	QS-G1/2-16	–
DK								–	QS-G1/2-12
Manifold sub-base for single solenoid valves									
E	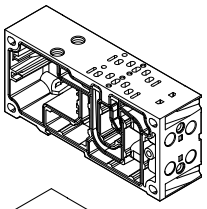	VABV-S4-2S-G18-2T1	■	–	–	–	2 (2)	QS-G1/8-8	–
EK								–	QS-G1/8-6
F		VABV-S4-1S-G14-2T1	–	■	–	–	2 (2)	QS-G1/4-10	–
FK								–	QS-G1/4-8
G	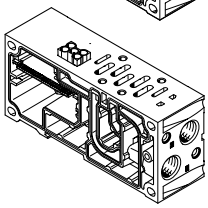	VABV-S2-1S-G38-T1	–	–	■	–	1 (1)	QS-G3/8-12	–
GK								–	QS-G3/8-10
H		VABV-S2-2S-G12-T1	–	–	–	■	1 (1)	QS-G1/2-16	–
HK								–	QS-G1/2-12

1) Value in brackets is max. number of solenoid coils that can be actuated

Key features – Pneumatic components

Manifold sub-base variants with QS fitting, valve terminal VTSA-F

Code		Type	Width				No. of valve positions (solenoid coils)[1]	Working ports (2, 4)	
			18 mm	26 mm	42 mm	52 mm		Code M Large	Code N Small
Manifold sub-base for double solenoid valves									
A	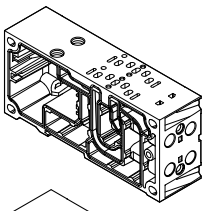	VABV-S4-2HS-G18-2T2	■	–	–	–	2 (4)	QS-G1/8-8	–
AK								–	QS-G1/8-6
B		VABV-S4-1HS-G14-2T2	–	■	–	–	2 (4)	QS-G1/4-10	–
BK								–	QS-G1/4-8
C	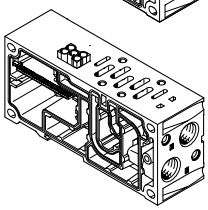	VABV-S2-1HS-G38-T2	–	–	■	–	1 (2)	QS-G3/8-12	–
CK								–	QS-G3/8-10
D		VABV-S2-2S-G12-T2	–	–	–	■	1 (2)	QS-G1/2-16	–
DK								–	QS-G1/2-12
Manifold sub-base for single solenoid valves									
E	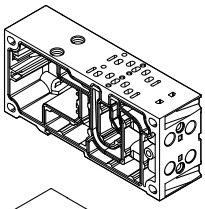	VABV-S4-2HS-G18-2T1	■	–	–	–	2 (2)	QS-G1/8-8	–
EK								–	QS-G1/8-6
F		VABV-S4-1HS-G14-2T1	–	■	–	–	2 (2)	QS-G1/4-10	–
FK								–	QS-G1/4-8
G	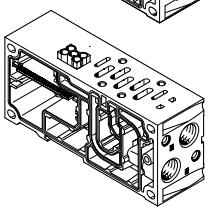	VABV-S2-1HS-G38-T1	–	–	■	–	1 (1)	QS-G3/8-12	–
GK								–	QS-G3/8-10
H		VABV-S2-2S-G12-T1	–	–	–	■	1 (1)	QS-G1/2-16	–
HK								–	QS-G1/2-12

1) Value in brackets is max. number of solenoid coils that can be actuated

Key features – Pneumatic components

Manifold sub-base variants with increased flow rate and CBUS loop-through, valve terminal VTSA-F-CB							
Code		Type	Width				No. of valve positions (solenoid coils)[1]
			18 mm	26 mm	42 mm	52 mm	
Manifold sub-base for double solenoid valves							
A	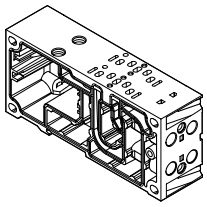	VABV-S4-2HS-G18-CB-2T2	■	–	–	–	2 (4)
B		VABV-S4-1HS-G14-CB-2T2	–	■	–	–	2 (4)
C	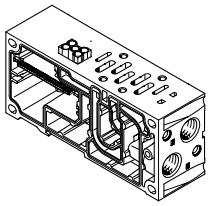	VABV-S2-1HS-G38-CB-T2			■		1 (2)
D		VABV-S2-2S-G12-CB-T2				■	1 (2)
Manifold sub-base for double solenoid valves, hybrid sub-base							
YA	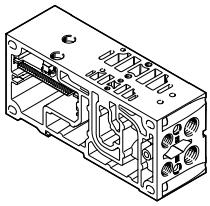	VABV-S4-12HS-G-CB-2T2 (external sensor evaluation) • 1x double solenoid, width 18 mm • 1x double solenoid, width 26 mm	■	■	–	–	2 (4)
Manifold sub-base for single solenoid valves							
E	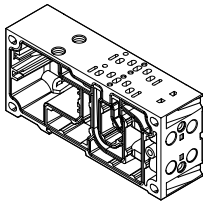	VABV-S4-2HS-G18-CB-2T1	■	–	–	–	2 (2)
F		VABV-S4-1HS-G14-CB-2T1	–	■	–	–	2 (2)
G	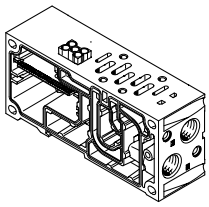	VABV-S2-1HS-G38-CB-T1	–	–	■	–	1 (1)
H		VABV-S2-2S-G12-CB-T1	–	–	–	■	1 (1)

1) Value in brackets is max. number of solenoid coils that can be actuated

Key features – Pneumatic components

Manifold sub-base variants with increased flow rate and CBUS loop-through, valve terminal VTSA-F-CB							
Code		Type	Width				No. of valve positions (solenoid coils)[1]
			18 mm	26 mm	40 mm	52 mm	
Manifold sub-base for soft-start valve							
PV	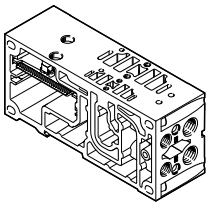	VABV-S6-1Q-G38-CB1-T5 With CBUS loop-through and new voltage zone, for soft-start valve and pressure sensor plug-in	–	–	■	–	1
PS		VABV-S6-1Q-G38-CB-T5 With CBUS loop-through in the same voltage zone, for soft-start valve and pressure sensor plug-in	–	–	■	–	1
Manifold sub-base for pilot air switching valve							
YB	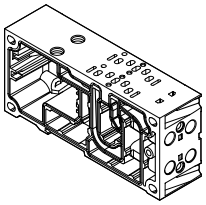	VABV-S4-2HS-G18-CB-2T5 (internal sensor evaluation for pilot air switching valve) • 1x CBUS loop-through • 1x double solenoid, with CBUS loop-through	■	–	–	–	2 (4)
YC	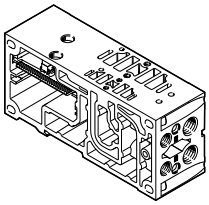	VABV-S4-12HS-G-CB-2T5 (internal sensor evaluation for pilot air switching valve) • 1x CBUS loop-through • 1x double solenoid, with CBUS loop-through	■	■	–	–	2 (4)

1) Value in brackets is max. number of solenoid coils that can be actuated

90°-connection plate for working ports 2 and 4								
Code		Type	Width				Connections	Working ports (2, 4) on the 90°-connection plate
			18 mm	26 mm	42 mm	52 mm		
P	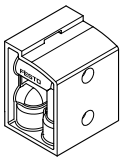	VABF-S4-...-A2G2-G...	■	–	–	–	2 and 4	G1/8
			–	■	–	–		G1/4
			–	–	■	–		G3/8
			–	–	–	■		G1/2

Key features – Pneumatic components

Sub-base valve

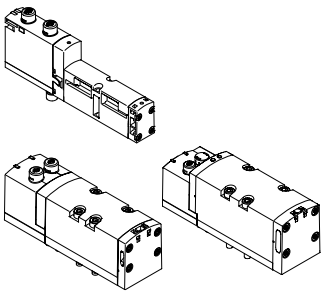

All valves are fitted with piston spool and patented sealing system, which ensures efficient sealing, a broad operating pressure range and long service life.

Sub-base valves can be quickly replaced since the tubing connections remain on the sub-base.

Irrespective of the valve function there are sub-base valves with one solenoid coil (single solenoid) or with two solenoid coils for double solenoid or double valve functions.

Reverse/vacuum operation

Select reverse operation (code Z) if you wish to operate an actuator (cylinder) with different pressures for the forward and return stroke.

Please note that the valves must then be operated via a separate pressure zone.

The reversible 3/2-way solenoid valves are also suitable for vacuum operation.

Reverse operation is only possible in pressure zones with external pilot air supply.

Note

- If a pressure zone is in reverse operation, the supply pressure is connected to port 3/5 and the air is exhausted via port 1 at all valve positions in this pressure zone.
- Reversible pressure regulators cannot be selected when a pressure zone is in reverse operation.
- With reversible pressure regulators, only the valve at this position is in reverse operation.
- When 5/3-way valves are operated in reverse, the mid-position function is changed from exhausted to pressurised and vice versa.

Cover plate

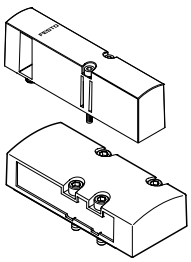

Plate without valve function for reserving valve positions on a valve terminal.

Valve and cover plates are attached to the manifold sub-base using screws.

Design

Valve replacement

The valves are attached to the metal manifold sub-base using two or four screws, which means that they can be easily replaced.

The sturdy mechanical manifold sub-base guarantees efficient long-term sealing.

Extension

Vacant positions can be fitted with valves at a later date. The dimensions, mounting points and existing pneumatic installations remain unchanged during this process.

For more information and technical data on extension, refer to the user documentation:
➔ Internet: VTSA/VTSA-F

Key features – Pneumatic components

Valve function Terminal code	Circuit symbol	Valve code	Width 18 mm	26 mm	42 mm	52 mm	Description
VC	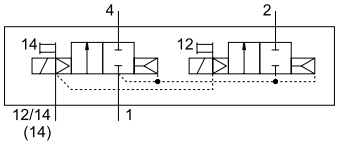	T22C	■	■	■	■	2x 2/2-way valve, single solenoid • Normally closed • Pneumatic spring return
VV	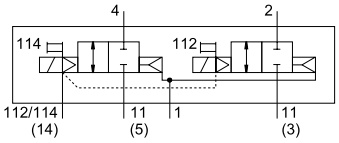	T22CV	■	■	■	–	2x 2/2-way valve, single solenoid • Reverse operation • Normally closed • Pneumatic spring return • Vacuum operation possible at 3 and 5
N	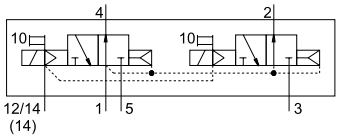	T32U	■	■	■	■	2x 3/2-way valve, single solenoid • Normally open • Pneumatic spring return • Operating pressure > 3 bar
K	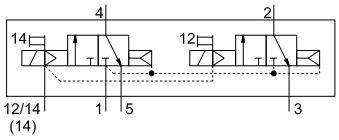	T32C	■	■	■	■	2x 3/2-way valve, single solenoid • Normally closed • Pneumatic spring return • Operating pressure > 3 bar
H	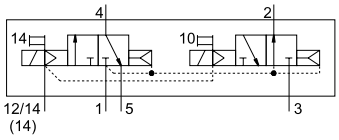	T32H	■	■	■	■	2x 3/2-way valve, single solenoid • Normal position – 1x closed – 1x normally open • Pneumatic spring return • Operating pressure > 3 bar
P	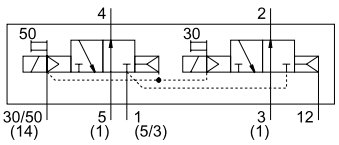	T32F	■	■	■	■	2x 3/2-way valve, single solenoid • Reverse operation only • Normally open • Pneumatic spring return
Q	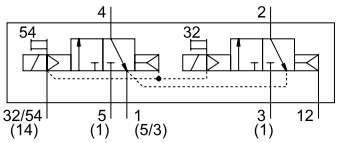	T32N	■	■	■	■	2x 3/2-way valve, single solenoid • Reverse operation only • Normally closed • Pneumatic spring return
R	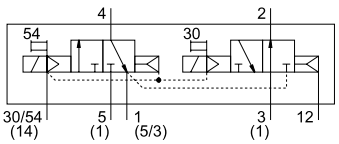	T32W	■	■	■	■	2x 3/2-way valve, single solenoid • Reverse operation only • Normal position – 1x closed – 1x normally open • Pneumatic spring return

Note

A filter must be installed upstream of valves operated in vacuum mode.
This prevents any foreign matter in the intake air getting into the valve (e.g. when operating a suction cup).

Key features – Pneumatic components

Valve function Terminal code	Circuit symbol	Valve code	Width 18 mm	26 mm	42 mm	52 mm	Description
M	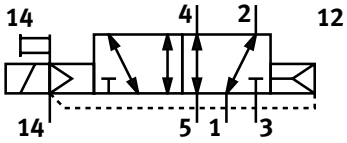	M52-A	■	■	■	■	5/2-way valve, single solenoid • Reverse operation • Pneumatic spring return
O	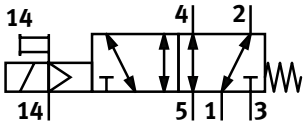	M52-M	■	■	■	■	5/2-way valve, single solenoid • Reverse operation • Reset via mechanical spring
J	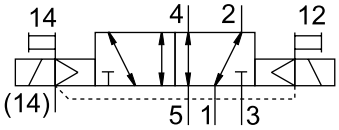	B52	■	■	■	■	5/2-way valve, double solenoid
D	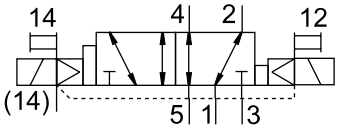	D52	■	■	■	■	5/2-way valve, double solenoid • Dominant signal at port 14 on the control side
SO SQ SS	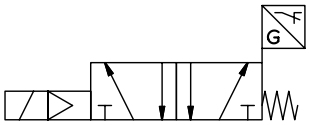	M52-M	■	–	–	–	5/2-way valve[2], single solenoid, as plug-in or via pilot valve with pneumatic interface to ISO 15218 See also special valve function in the separate chapter "Solenoid valve with switching position sensing" ➔ Page 161
SO SQ SS	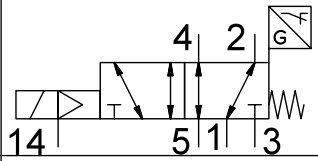	M52-M	–	■	–	–	5/2-way valve[2], single solenoid, as plug-in or via pilot valve with pneumatic interface to ISO 15218 See also special valve function in the separate chapter "Solenoid valve with switching position sensing" ➔ Page 161
SP SN	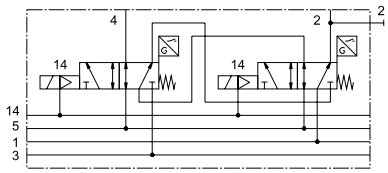	T52-M	–	■	–	–	2x 5/2-way valve, single solenoid, with switching position sensing, pneumatically linked via two ducts for special valve function "control block with safety function" ➔ Page 167
B	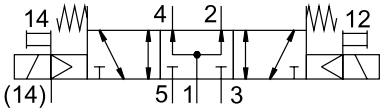	P53U	■	■	■	■	5/3-way solenoid valve • Mid-position pressurised[1] • Reset via mechanical spring
G	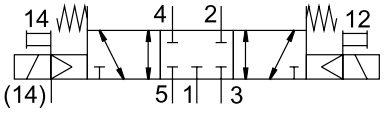	P53C	■	■	■	■	5/3-way solenoid valve • Mid-position closed[1] • Reset via mechanical spring
E	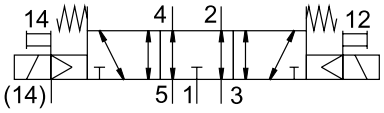	P53E	■	■	■	■	5/3-way solenoid valve • Mid-position exhausted[1] • Reset via mechanical spring

1) If neither solenoid coil is energised, the valve is moved to its mid-position by a mechanical spring. If the two coils are permanently energised one after the other, the valve remains in the switching position of the coil that was activated first.

2) The symbol represents a valve with a proximity switch with a switching output signal, in the illustration an N/O contact. In accordance with ISO 1219-1, this symbol applies to both N/O and N/C contacts. All sensors used here have an N/C contact as the switching element function.

Key features – Pneumatic components

Valve function Terminal code	Circuit symbol	Valve code	Width 18 mm	26 mm	42 mm	52 mm	Description
SA	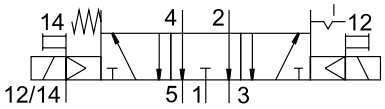	P53ED	■	■	–	–	5/3-way solenoid valve, for special functions as switching position 14 is retained • Pressureless switching, self-latching loop, pneumatic operation • Mid-position exhausted, switching position 14 is retained • Reset via mechanical spring
SB	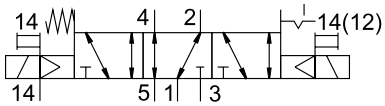	P53AD	■	■	–	–	5/3-way solenoid valve, for special functions as switching position 14 is retained • Holding, blocking a movement (mechanically) • Mid-position: port 2 pressurised, port 4 exhausted, switching position 14 is retained • Reset via mechanical spring
SD	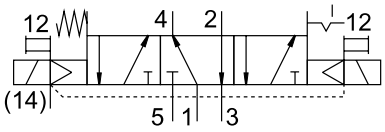	P53BD	■	■	–	–	5/3-way solenoid valve, for special functions as switching position 14 is retained • Holding, blocking a movement (mechanically) • Mid-position: port 4 pressurised, port 2 exhausted, switching position 14 is retained • Reset via mechanical spring
SE	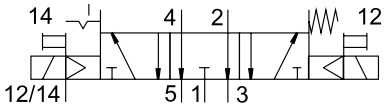	P53EP	■	■	–	–	5/3-way solenoid valve, for special functions as switching position 12 is retained • Pressureless switching, self-latching loop, pneumatic operation • Mid-position exhausted, switching position 12 is retained • Reset via mechanical spring
VG	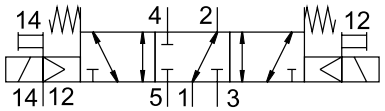	P53F	–	–	■	■	5/3-way solenoid valve • Positioning • Mid-position: port 2 pressurised, port 4 closed[1)] • Reset via mechanical spring
VB	–	–	–	■	–	–	Vacuum generator with ejector pulse and adjustable air saving function (plate for 2 valve positions, sensor SDE3 with display and M12 connection)
L	–	–	■	■	■	■	For valve terminal only: Cover plate for vacant valve position

1) If neither solenoid coil is energised, the valve is moved to its mid-position by a mechanical spring. If the two coils are permanently energised one after the other, the valve remains in the switching position of the coil that was activated first.

Key features – Pneumatic components

Vertical stacking

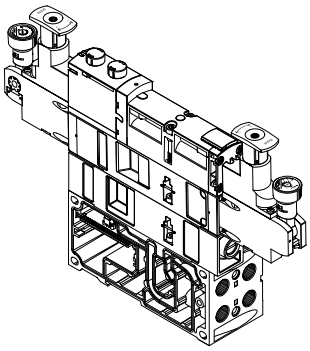

Additional function units can be added to each valve position between the sub-base (manifold sub-base) and the valve.

These functions are known as vertical stacking modules and enable special functions or control of an individual valve position. It is possible to link several valve sizes on one valve terminal.

Note

Certain combinations are not recommended due to the design of the individual vertical stacking components.

Vertical stacking components

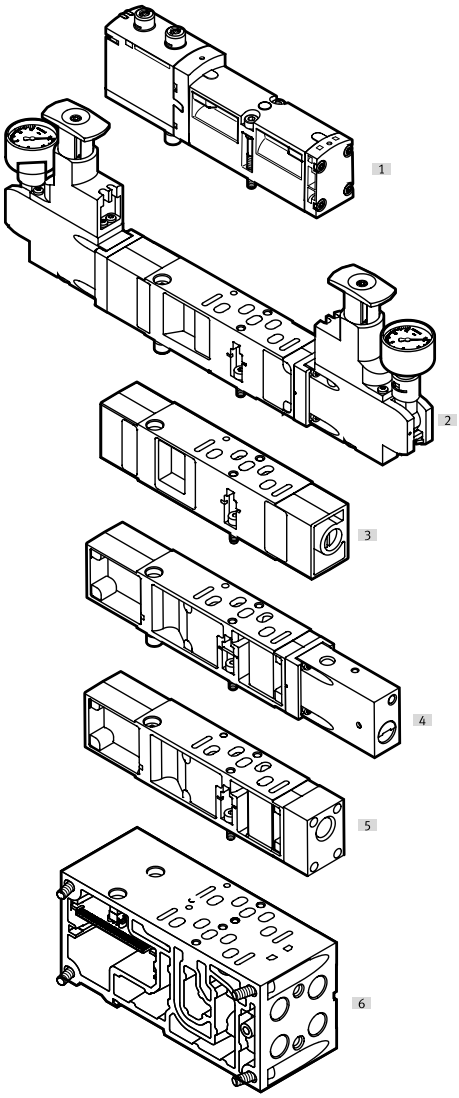

The following component sequence is recommended for valve positions with vertical stacking:

[1] Valve VSVA
[2] Pressure regulator plate
[3] Throttle plate
[4] Vertical pressure shut-off plate
[5] Vertical supply plate
[6] Manifold sub-base

Key features – Pneumatic components

Vertical stacking

Pressure regulator plate

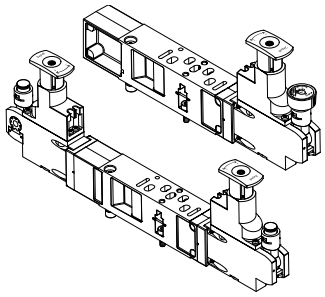

An adjustable pressure regulator can be installed between the base plate (manifold sub-base) and the valve in order to control the force of the triggered actuator.

This pressure regulator maintains a largely constant output pressure (secondary side) independent of pressure fluctuations (primary side) and air consumption. Also suitable for valves with symmetrical design.

Standard version:
- Standard port pattern to ISO 15407-2 or ISO 5599-2
- For pressure regulation up to 6 bar or up to 10 bar
- Without pressure gauge (optional)
- Regulator knob with 3 positions (locked, reference position, freely positionable)

Note

With the A, B and AB pressure regulators VABF-S...-1-..., the regulated pressure should not be less than 2 bar.
Use the reversible A, B or AB pressure regulators for regulated pressure of less than 2 bar.

Note

Please note for repeat orders of pressure regulators in sizes 42 mm and 52 mm:
The part number printed on the regulator plate refers only to the standard version.
When reordering pressure regulators with additional equipment, such as an extended design, only use the VABF configurator.
➔ Internet: vabf-s2

Rotary knob for pressure regulator for width 42 mm and 52 mm

Setting the pressure

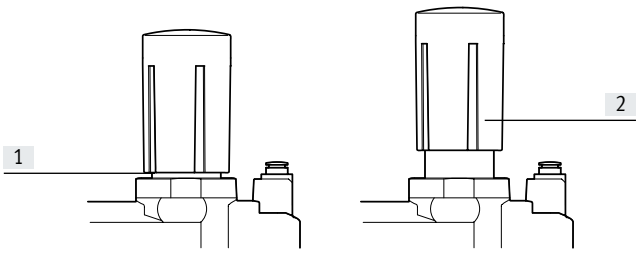

[1] Pull the rotary knob upwards out of the locking position (1) into the setting position (2)
[2] Set the desired pressure at the setting level (2) using the rotary knob
[3] After setting the pressure, push the rotary knob back down to the locking position (1)

Rotary knob for pressure regulator for width 42 mm and 52 mm

Locking the rotary knob

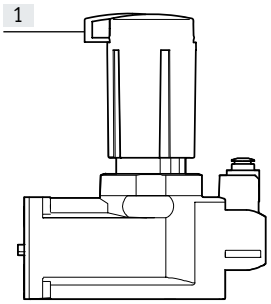

After setting the pressure, the rotary knob can be locked against unauthorised actuation.
To do this, the blue locking element is pushed out and secured with a padlock.
The rotary knob is now fixed in place and cannot be moved.

Note

The position of the rotary knob and the locking element is determined by the pressure setting.
If a number of pressure regulators are installed next to one another, there may not always be enough space to push out the locking elements.
To ensure that the rotary knob can still be locked, it can be pulled off completely, rotated 60° or 120° and pushed back on.
Further information:
➔ Internet: User documentation

[1] Locking element, pushed out

Key features – Pneumatic components

Vertical stacking

Energy efficiency through dual-pressure operation or through operation with reversible pressure regulators

Saving energy starts with compressed air generation. It is possible to achieve energy savings of up to 10% per 1 bar drop in pressure. Therefore, wherever possible reduce the pressure to the minimum required.
To save additional energy, you can operate valves in dual-pressure mode in a separate pressure zone.

To do this, the valves used must be operated in reverse mode, i.e. with reversed flow direction (see also information on ➔ page 107). In dual-pressure operation, the valves are then supplied with pressure separately via ducts 3 and 5.
The air is exhausted via duct 1.

Requirements for dual-pressure operation:
- Exhaust ducts 3 and 5 in the pressure zone are completely separate.
- Valves are used that can be operated in reverse mode.

Advantages of dual-pressure operation:
It is possible to save energy if a valve can be supplied with different pressures. The advantages are:
- Saves energy because the return stroke can be carried out using reduced force, e.g. 3 bar instead of 6 bar.
- Just one valve is required, as in the case of vacuum application with ejector pulse for example (e.g. duct 3 for vacuum switching, duct 5 for the ejector pulse).
- A reduction in compressed air consumption of up to 50% is possible if two different pressures can be applied to the valve (return stroke uses reduces pressure).

Advantages of reversible operation:
If compressed air is applied to the pressure regulator upstream of the valve (circuit diagram 2), exhausting is directly via the solenoid valve.
This has the following advantages:
- Increased exhaust capacity, exhausting is up to 50% quicker
- Lower wear on the pressure regulator
- Can be adjusted very accurately, perfect for very low operating pressures
- No quick exhaust valves are required.
- Fast cycle times
- The pressure regulator can be adjusted independently of the valve position because operating pressure is permanently present at the pressure regulator.

Dual-pressure operation with standard regulator

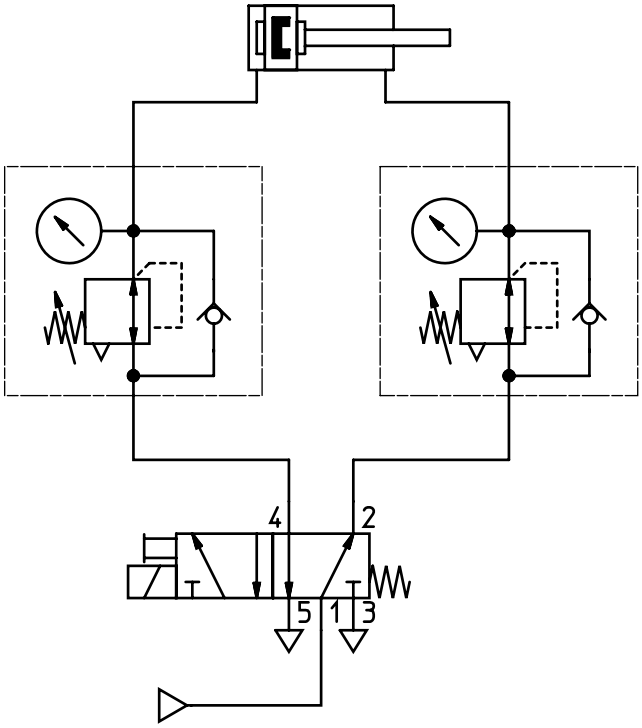

Circuit diagram 1:
Pressure is regulated downstream of the valve

Dual-pressure operation with reversible controller

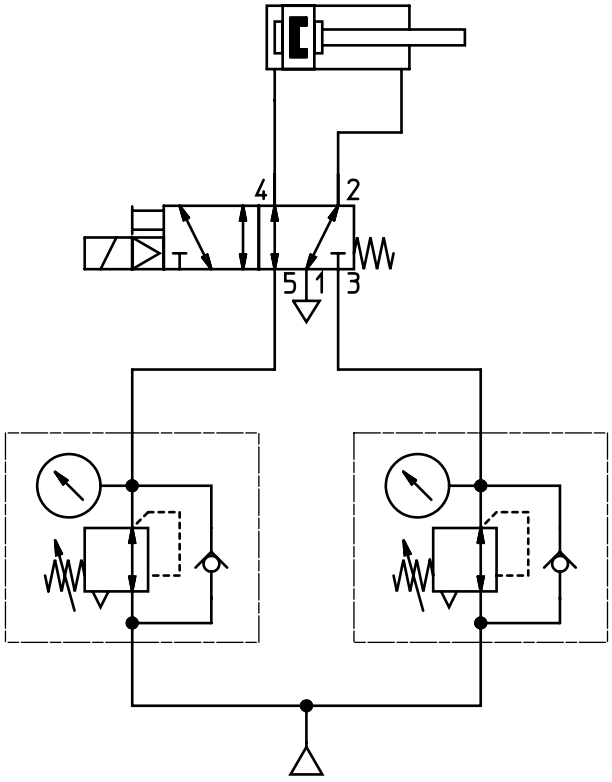

Circuit diagram 2:
Pressure is regulated upstream of the valve

Key features – Pneumatic components

Vertical stacking

Mode of operation of the pressure regulator plate (P regulator) for port 1; code: ZA, ZAY, ZF, ZFY

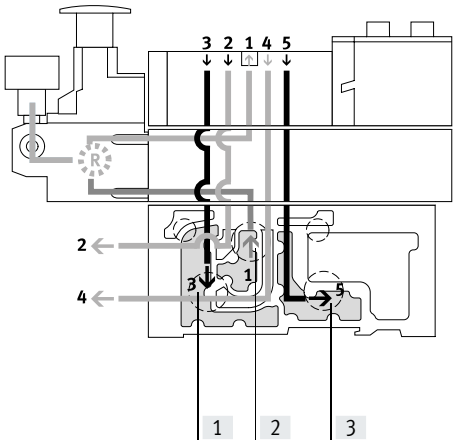

This pressure regulator regulates the pressure upstream of the valve in duct 1. Ducts 2 and 4 thus have the same regulated pressure.

During exhausting, the exhaust flow in the valve is from duct 2 to duct 3 and from duct 4 to duct 5.

[1] Duct 3 (exhaust air)
[2] Duct 1 (supply air)
[3] Duct 5 (exhaust air)

Advantages

- The pressure regulator is not affected by exhausting, since the pressure is regulated upstream of the valve.
- The pressure regulator can always be adjusted, since the pressure from the valve terminal is always present.

Application examples

- An equal working pressure is required at working ports 2 and 4.
- A working pressure (e.g. 3 bar) lower than the operating pressure present at the valve terminal (e.g. 8 bar) is required.

Mode of operation of the pressure regulator plate (AB regulator) for ports 2 and 4; code: ZD, ZDY, ZI, ZIY

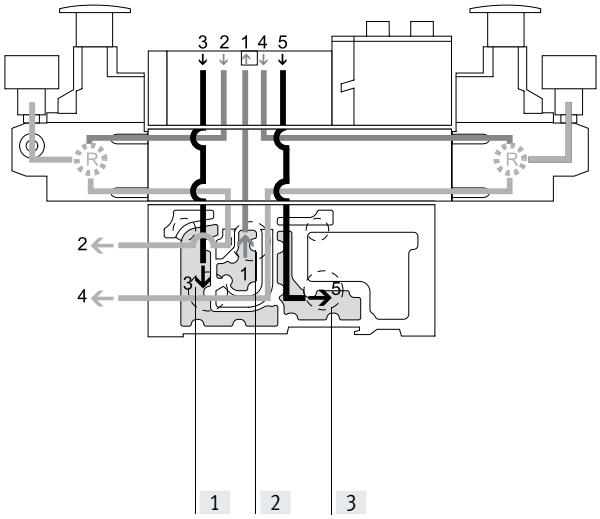

This pressure regulator regulates the pressure in ducts 2 and 4 after the pressure medium flows through the valve.
During exhausting, the exhaust flow in the valve is from duct 2 to duct 3 and from duct 4 to duct 5 via the pressure regulator.

Example with the following switching position:
The supply air flows from duct 1 of the manifold sub-base via the valve to duct 2, it is then regulated and made available at port 2 of the manifold sub-base. At the same time, exhausting takes place via duct 4 of the manifold sub-base, via the regulator and via the valve into duct 5 of the manifold sub-base.

[1] Duct 3 (exhaust air)
[2] Duct 1 (supply air)
[3] Duct 5 (exhaust air)

Constraints

- The pressure regulator cannot be adjusted in the exhaust position. For example, the pressure regulator for duct 4 cannot be adjusted when the valve is pressurised in the switching position from duct 1 to duct 2 and exhausted from duct 4 to duct 5.

Application examples

- Two different working pressures are required at ports 2 and 4 instead of the valve terminal operating pressure.

Key features – Pneumatic components

Vertical stacking

Mode of operation of the pressure regulator plate (AB regulator, reversible) for ports 2 and 4, reversible; code: ZE, ZEY, ZJ, ZJY

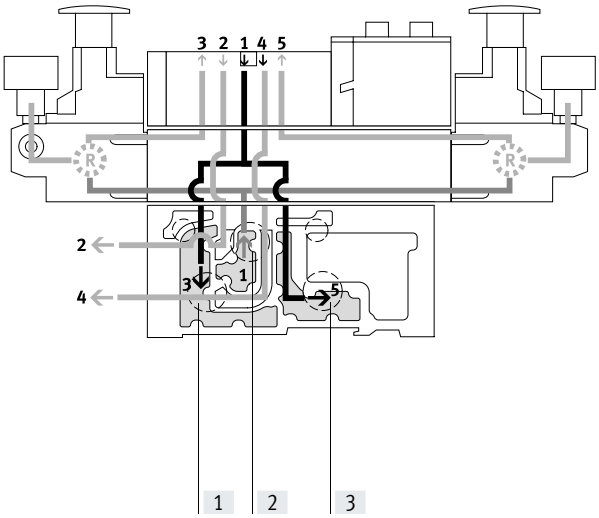

With this pressure regulator, the supply air (duct 1) is split and routed directly to both pressure regulators. In each case the regulated supply air is present in ducts 3 and 5 on the valve. The valve is thus operated in reverse mode.

This means that:

- Duct 3 routes the working pressure to port 2
- Duct 5 routes the working pressure to port 4

Example with the following switching position:

The supply air in duct 1 is split between ducts 3 and 5 in the regulator and flows from here to the valve. In the valve, the supply air is routed to port 2 of the manifold sub-base. The exhaust air is simultaneously routed via duct 4 of the manifold sub-base and via the valve to regulator duct 1, where it is split between ducts 3 and 5 and then discharged via the manifold sub-base.

[1] Duct 3 (exhaust air)
[2] Duct 1 (supply air)
[3] Duct 5 (exhaust air)

Application examples

- Two different pressures are required in ducts 2 and 4 instead of the valve terminal's operating pressure.
- Quick exhausting is required.
- The pressure regulator must always be adjustable.

Note

- Reversible pressure regulator plates should only be combined with valves that can be operated in reverse mode.
- Valves in valve positions with vertical pressure shut-off plates are operated with internal pilot air, even when the valve terminal is operated with external pilot air supply.
- The following combination of reversible valve terminals with vertical stacking components is not permitted:
  - Reversible pressure regulator plates
  - Throttle plates
  - Vertical pressure shut-off plates
  - Vertical supply plates

Advantages

- Fast cycle times
- 50% higher exhaust flow rate, as air is not exhausted via the pressure regulator. The load on the pressure regulator is also reduced.
- No quick exhaust valves are required.
- Operating pressure is always present at the pressure regulator, as the pressure is regulated upstream of the valve, i.e. the regulator can always be adjusted.

Disadvantages

- 2x 3/2-way solenoid valves (code N, K, H) cannot be used, as pressure is present at ports 3 and 5.
- No practical combination with a throttle plate possible.

Key features – Pneumatic components

Vertical stacking – Pressure regulator plate, variants[1)]

Code		Type	Width				Pressure regulation up to		Description
			18 mm	26 mm	42 mm	52 mm	6 bar	10 bar	
Pressure regulator plate for port 1 (P regulator)									
ZA	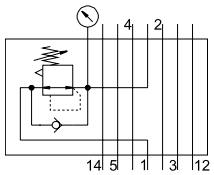	VABF-S...-R1C2-C-10	■	■	■	■	–	■	Regulates the operating pressure in duct 1 upstream of the solenoid valve
ZAY[2)]		VABF-S...-R1C2-C-10E	■	■	■	■	–	■	
ZF		VABF-S...-R1C2-C-6	■	■	■	■	■	–	
ZFY[2)]		VABF-S...-R1C2-C-6E	■	■	■	■	■	–	
Pressure regulator plate for port 2 (B regulator)									
ZC	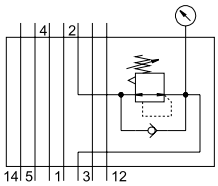	VABF-S...-R2C2-C-10	■	■	■	■	–	■	Regulates the operating pressure in duct 2 downstream of the solenoid valve
ZCY[2)]		VABF-S...-R2C2-C-10E	■	■	■	■	–	■	
ZH		VABF-S...-R2C2-C-6	■	■	■	■	■	–	
ZHY[2)]		VABF-S...-R2C2-C-6E	■	■	■	■	■	–	
Pressure regulator plate for port 4 (A regulator)									
ZB[2)]	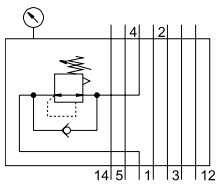	VABF-S...-R3C2-C-10	■	■	■	■	–	■	Regulates the operating pressure in duct 4 downstream of the solenoid valve
ZG[2)]		VABF-S...-R3C2-C-6	■	■	■	■	■	–	
Pressure regulator plate for ports 2 and 4 (AB regulator)									
ZD	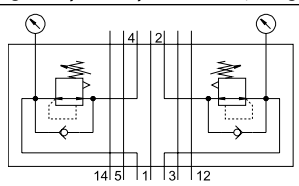	VABF-S...-R4C2-C-10	■	■	■	■	–	■	Regulates the working pressure in ducts 2 and 4 downstream of the solenoid valve
ZDY[2)]		VABF-S...-R4C2-C-10E	■	■	■	■	–	■	
ZI		VABF-S...-R4C2-C-6	■	■	■	■	■	–	**Note** These pressure regulator plates cannot be combined with reversible 2x 3/2-way solenoid valves (code P, Q, R).
ZIY[2)]		VABF-S...-R4C2-C-6E	■	■	■	■	■	–	

1) Width variants 42 mm and 52 mm (ISO 5599-2, ISO 1 and ISO 2) can be selected via the pressure regulator configurator VABF-S2
2) Also suitable for valves with symmetrical design

Key features – Pneumatic components

Vertical stacking – Pressure regulator plate, reversible, variants[1]

Code		Type	Width				Pressure regulation up to		Description
			18 mm	26 mm	42 mm	52 mm	6 bar	10 bar	
Pressure regulator plate for port 2, reversible (B regulator)									
ZL	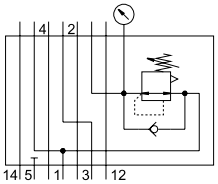	VABF-S...-R6C2-C-10	■	■	■	■	–	■	Reversible pressure regulator for port 2
ZLY[2]		VABF-S...-R6C2-C-10E	■	■	■	■	–	■	
ZN		VABF-S...-R6C2-C-6	■	■	■	■	■	–	
ZNY[2]		VABF-S...-R6C2-C-6E	■	■	■	■	■	–	
Pressure regulator plate for port 4, reversible (A regulator)									
ZK[2]	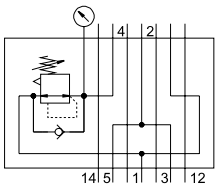	VABF-S...-R7C2-C-10	■	■	■	■	–	■	Reversible pressure regulator for port 4
ZM[2]		VABF-S...-R7C2-C-6	■	■	■	■	■	–	
Pressure regulator plate for ports 2 and 4, reversible (AB regulator)									
ZE	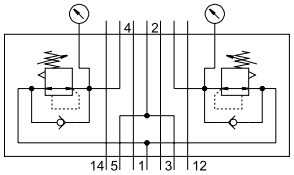	VABF-S...-R5C2-C-10	■	■	■	■	–	■	• Reversible pressure regulator for ports 2 and 4 • Pressure regulation upstream of the solenoid valve • Routes the operating pressure from duct 1 to ducts 3 and 5 • Routes the exhaust air from duct 1 to ducts 3 and 5
ZEY[2]		VABF-S...-R5C2-C-10E	■	■	■	■	–	■	
ZJ		VABF-S...-R5C2-C-6	■	■	■	■	■	–	**Note** These pressure regulator plates cannot be combined with standard 2x 3/2-way solenoid valves (code N, K, H). Reversible 2x 3/2-way solenoid valves (code P, Q, R) must not be operated in a separate pressure zone in combination with these pressure regulators.
ZJY[2]		VABF-S...-R5C2-C-6E	■	■	■	■	■	–	

1) Width variants 42 mm and 52 mm (ISO 5599-2, ISO 1 and ISO 2) can be selected via the pressure regulator configurator VABF-S2
2) Also suitable for valves with symmetrical design

Key features – Pneumatic components

Vertical stacking

Throttle plate

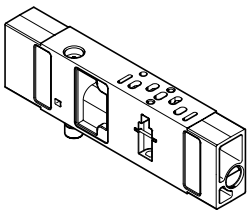

Equipped with two flow control valves at which the exhaust air flow rate at exhaust ports 3 or 5 can be adjusted.

This enables the movement of the drive to be initiated and the required speed to be set on the valve terminal using the manual override.
Ducts 3 and 5 can be adjusted independently of each other.

Note

On reversible valve terminals, the air flow is controlled in ducts 3 and 5 upstream of the valve.

Code		Type	Width				Description
			18 mm	26 mm	42 mm	52 mm	
X	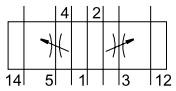	VABF-S4-...F1B1-C	■	■	■	■	• Controls the flow of exhaust air downstream of the valve to ducts 3 and 5

Vertical pressure shut-off plate

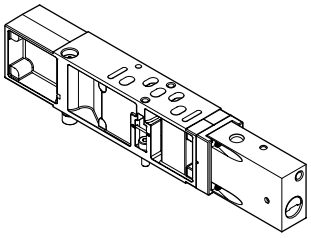

Equipped with a switch via which the compressed air supply can be shut off. This enables a solenoid directional control valve or subsequent vertical stacking plate to be replaced without switching off the overall air supply.

If the control chain has a redundant connection, the cycle can continue even in the case of a cyclical control system.
Following activation of the shut-off, the exhaust air/return air from the actuated valve is expelled. This takes place via an M5 threaded connection or via duct 3 in the case of width 18 and 26 mm, and via duct 3 in the case of width 42 and 52 mm.

Note

The operating pressure of the valve terminal must lie within the range of the required pilot pressure (i.e. min. 3 bar). When using the end plate with pilot air selector, only the switching position with code W and U can be used.

Code		Type	Width				Description
			18 mm	26 mm	42 mm	52 mm	
ZT	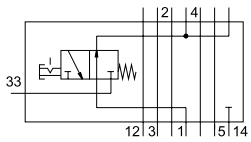	VABF-S4...L1D1-C	■	■	–	–	• 3/2-way valve for shutting off the operating pressure at the valve position • Blocks ducts 1 and 14 for the valve position • Supplies the valve position with internal pilot air • Pressure separation at the valve assembly
	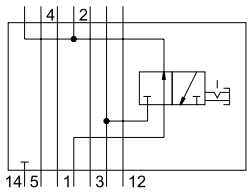	VABF-S2...L1D1-C	–	–	■	■	
ZS	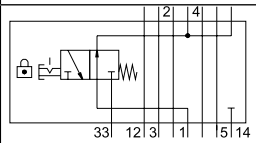	VABF-S...L1D2-C	■	■	–	–	• 3/2-way valve for shutting off the operating pressure at the valve position • Blocks ducts 1 and 14 for the valve position • Supplies the valve position with internal pilot air • Pressure separation can be shut off on the valve assembly using a key

Note

The vertical pressure shut-off plates VABF-... are provided only in combination with VSVA-...T1L solenoid valves from Festo. In the vertical pressure shut-off plate only ducts 1 and 14 are blocked, and not duct 12.

Key features – Pneumatic components

Vertical supply plate

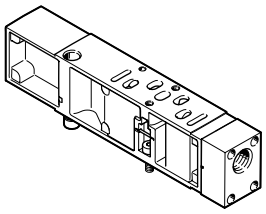

This plate enables a valve to be supplied with individual operating pressure independently of the operating pressure of the valve terminal.

As additional pressure supply for a valve. To supply an additional pressure zone.

Code		Type	Width				Description
			26 mm	18 mm	42 mm	52 mm	
ZU	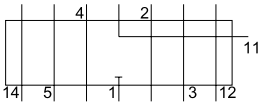	VABF-S-...P1A3-...	■	■	■	■	• Plate with port 11 for supplying individual operating pressure to a valve position, duct 1
ZV	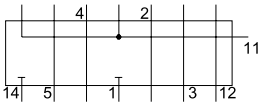	VABF-S-...P1A14-...	■	■	■	■	• Plate with port 11 for supplying individual operating pressure to a valve position, ducts 1 and 14

Key features – Pneumatic components

Compressed air supply and exhausting

Right end plate, internal pilot air supply

Connection size G1/2 right end plate ducts 1/3/5

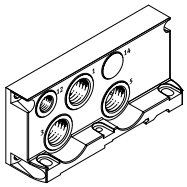

VTSA/VTSA-F
- Code V (port 14 is not available)

VTSA-F-CB
- Code NS

Connection size G3/4 right end plate ducts 1/3/5

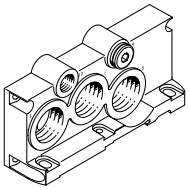

VTSA/VTSA-F
- Code V1, V3 (port 14 is sealed with a blanking plug)

VTSA-F-CB
- Code MS

Right end plate, external pilot air supply

Connection size G1/2 right end plate ducts 1/3/5

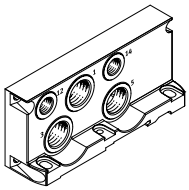

VTSA/VTSA-F
- Code X

VTSA-F-CB
- Code NZ

Connection size G3/4 right end plate ducts 1/3/5

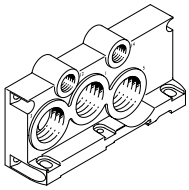

VTSA/VTSA-F
- Code X1, X3

VTSA-F-CB
- Code MZ

Right end plate, size ISO 3, internal pilot air supply

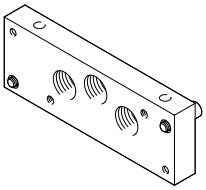

VTSA/VTSA-F
- Code V2, for width 65 mm

Right end plate, size ISO 3, external pilot air supply

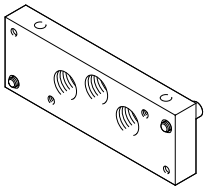

VTSA/VTSA-F
- Code X2, for width 65 mm

Right end plate with pilot air selector

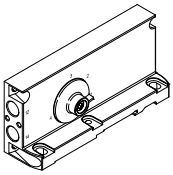

VTSA/VTSA-F
- Code Z, Y, W, U
- Code Z: selector position 1, external pilot air supply
- Code Y: selector position 2, internal pilot air supply
- Code W: selector position 3, external pilot air supply (ducted)
- Code U: selector position 4, internal pilot air supply (ducted)

VTSA-F-CB
- Code YZ: selector position 1, external pilot air supply
- Code YS: selector position 2, internal pilot air supply

The valve terminal VTSA/VTSA-F/VTSA-F-CB can be supplied with pressure at one or more points. This is a reliable way of ensuring that all functional components will always offer good performance, even with large-scale extensions.

The valve terminal is generally supplied via supply plates (max. 16 per valve terminal) and/or via the right end plate. When using valves with a width of 65 mm, the compressed air can also be supplied and exhausted using the adapter plate VABA-....

Exhausting is either via silencers or ports for ducted exhaust air on the supply plates and/or on the right end plate.

Note

Compressed air supply and exhausting for size ISO 3 is described in a separate chapter on adaptation to width 65 mm (internal/external pilot air is regulated via MUH plate (solenoid valve)).

Key features – Pneumatic components

Compressed air supply and exhausting

Supply plates for VTSA/VTSA-F, exhaust port 3/5 separate

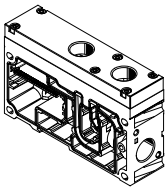

- Code K

Supply plates for VTSA/VTSA-F, exhaust port 3/5 common

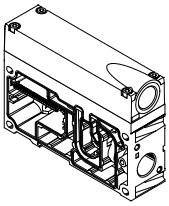

- Code L

Supply plates/extension module, pneumatic and electric air supply plate for VTSA-F-CB, exhaust port 3/5 separate

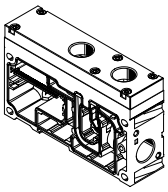

- Code U
- Code UW
- Code UWS

Supply plates/extension module, pneumatic and electric air supply plate for VTSA-F-CB, exhaust port 3/5 common

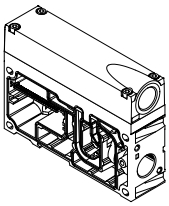

- Code U
- Code UW
- Code UWS

Key features – Pneumatic components

Additional compressed air supply/duct separation, VTSA/VTSA-F

Additional supply plates can be used to ensure the compressed air supply for larger valve terminals or to create additional pressure zones.
These can be selected at any point upstream or downstream of the manifold sub-bases.

Supply plates contain the ports:
- Compressed air supply (1)
- Exhaust port (3/5) common or separate

Depending on your order, the exhaust air ducts are either ducted or exhausted via silencers.

Operation with ducted exhaust air:
With ducted exhaust air, venting can be via a supply plate or a right end plate (code V or X).

If duct separation is required, there are a number of different options:
- Duct separation 1, 3, 5: code S
- Duct separation 1: code T
- Duct separation 3, 5: code R

If a combination of duct separation (S, T or R) and one or two supply plates is required, the following variants can be selected:
- Supply plate with duct separation on the left: code SU, TU, RU
- Supply plate with duct separation on the right: code US, UT, UR
- 2 supply plates with intermediate duct separation: code USU, UTU, URU.

Supply plates for VTSA/VTSA-F

Code		Type	Description
U	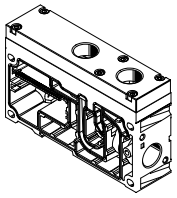	• Exhaust port 3/5 common (not illustrated) • VABF-S6-10-P1A7-G12 • Exhaust port 3/5 separate • VABF-S6-10-P1A6-G12	Supply plate without duct separation (no R, S or T selected)
SU TU RU	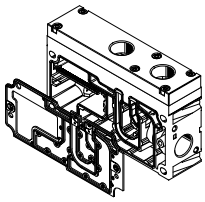		Supply plate with duct separation on the left, if R, S or T is selected
US UT UR	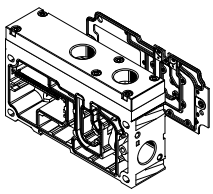		Supply plate with duct separation on the right, if R, S or T is selected
USU UTU URU	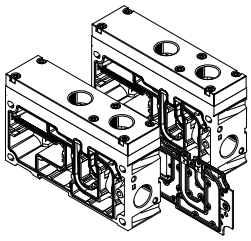		2 supply plates with duct separation in centre, if R, S or T selected

Key features – Pneumatic components

Additional compressed air supply/duct separation, VTSA-F-CB

Additional supply plates can be used to ensure the compressed air supply for larger valve terminals or to create additional pressure zones.
These can be selected at any point upstream or downstream of the manifold sub-bases.

Supply plates contain the ports:
- Compressed air supply (1)
- Exhaust port (3/5) common or separate

Depending on your order, the exhaust air ducts are either ducted or exhausted via silencers.

Operation with ducted exhaust air:
With ducted exhaust air, venting can be via a supply plate or a right end plate (code V or X).

If duct separation is required, there are a number of different options:
- Duct separation 1, 14: code TL
- Duct separation 1, 3, 5, 14: code K
- Duct separation 14: code L
- Duct separation 1, 3, 5: code S
- Duct separation 1: code T
- Duct separation 3, 5: code R

Supply plates, extension module and pneumatic and electric air supply plate for VTSA-F-CB

Code		Type	Description
U	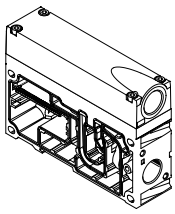	• Exhaust port 3/5 common • VABF-S6-1-P1A7-G12-CB	Additional pneumatic supply Connecting thread G1/2
UW		• Exhaust port 3/5 common • VABF-S6-1-P8A7-G12-CB	Additional pneumatic and electrical supply Connecting thread G1/2 Generation of 24 additional valve addresses (electrical supply is provided internally from Uval)
UWS		• Exhaust port 3/5 common • VABF-S6-1-P8A7-G12-CB1	Additional pneumatic and electrical supply Connecting thread G1/2 Generation of 24 additional valve addresses (electrical supply is provided from new (safe) voltage zone (internally from S2))
U	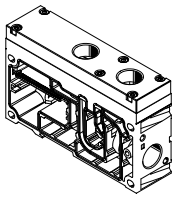	• Exhaust port 3/5 separate • VABF-S6-1-P1A6-G12-CB	Additional pneumatic supply Connecting thread G1/2
UW		• Exhaust port 3/5 separate • VABF-S6-1-P8A6-G12-CB	Additional pneumatic and electrical supply Connecting thread G1/2 Generation of 24 additional valve addresses (electrical supply is provided internally from Uval)
UWS		• Exhaust port 3/5 separate • VABF-S6-1-P8A6-G12-CB1	Additional pneumatic and electrical supply Connecting thread G1/2 Generation of 24 additional valve addresses (electrical supply is provided from new (safe) voltage zone (internally from S2))

Key features – Pneumatic components

Right end plate

Right end plates with different port sizes are available depending on the flow rate required.

With the following right end plates, the outlet direction of the ports is aligned with the horizontal stacking direction.
Right end plates with pilot air supply/ pilot exhaust air (VTSA/VTSA-F)

- Internal pilot air supply: code V, V1, V2 and V3 (ducts 1 and 14 are connected)
- External pilot air supply: code X, X1, X2 and X3, as well as XP1, XP2, XP3 and XS

Right end plates with pilot air supply/ pilot exhaust air (VTSA-F-CB)

- Internal pilot air supply: code NS, MS (ducts 1 and 14 are connected)
- External pilot air supply: code NZ, MZ

For end plates with pilot air selector, the outlet direction of the ports is to the front of the valve terminal. This means that all the ports on the valve terminal can be combined in one outlet direction.
The special feature of the end plates with pilot air selector is the selector switch itself, which has four settings for different pilot air supply/pilot exhaust air.

End plates with pilot air selector switch set at the factory for:

- External pilot air supply: selector position 1 (code Z)
- Internal pilot air supply: selector position 2 (code Y)
- External pilot air supply, ducted pilot exhaust air: selector position 3 (code W)
- Internal pilot air supply, ducted pilot exhaust air: selector position 4 (code U)

Note

- The end plate with pilot air selector must be used in combination with a supply plate.
- The reversible 3/2-way solenoid valves (code P, Q, R) must only be operated in selector position 1 or 2.
- Ducted pilot exhaust air via port 12 is only possible with rotated seals on the valve.

Right end plate, variants

Code VTSA/VTSA-F	Code VTSA-F-CB	Blanking plug in duct	Pilot air supply	Ducted pilot exhaust air [1] Position of seal on solenoid valve ("ISO" is visible)	Connecting thread 1, 3, 5	Connecting thread 12, 14
V	NS	–	Internal	–	G1/2	G1/4
V1	MS	–		–	G3/4	G1/4
V2	–	–		–	G1	G1/8
V3	–	–		■	G3/4	G1/4
X	NZ	–	External	–	G1/2	G1/4
X1	MZ	–		–	G3/4	G1/4
X2	–	–		–	G1	G1/8
X3	–	–		■	G3/4	G1/4
XP1 [2]	NZAB	1	External, via soft-start valve ("gradual pressure build-up")	–	G1/2	G1/4
XP2 [3]	NZABCB	1, 14		–	G1/2	G1/4
XP3 [3]	NZABCBGB	1, 3, 5, 14		–	G1/2	G1/4
XS [4]	NZCB	14	External, via pilot air switching valve ("switchable pilot air")	–	G1/2	G1/4

1) Pilot exhaust air is ducted on the end plate via port 12 and exhausted (done by turning the seal on the solenoid valve to position "ISO")
2) Not possible in combination with soft-start valve code PQ, PP, PO (with internal pilot air supply)
3) Not possible in combination with soft-start valve code PN, PM, PK (with external pilot air supply)
4) Only possible in combination with pilot air switching valve code SS with intermediate plate code ZO

Right end plate with pilot air selector

Code VTSA/VTSA-F	Code VTSA-F-CB	Pilot air supply	Selector position	Ducted pilot exhaust air [1] Position of seal on solenoid valve ("ISO" is visible)	Connecting thread 12, 14
Z	YZ	External	1	–	G1/4
Y	YS	Internal	2	–	G1/4
W	–	External (ducted)	3	■	G1/4
U	–	Internal (ducted)	4	■	G1/4

1) Pilot exhaust air is ducted on the end plate via port 12 and exhausted (done by turning the seal on the solenoid valve to position "ISO")

Key features – Pneumatic components

Right end plate				
Code VTSA/VTSA-F	Code VTSA-F-CB	Type of compressed air supply and pilot air supply		Description
Right end plate (graphical representation)				
V	NS	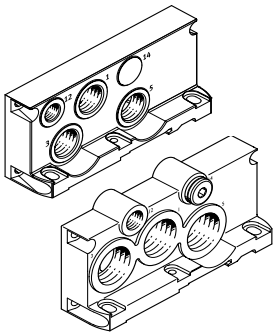	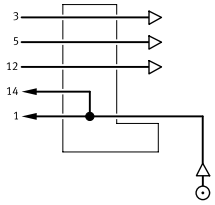	Internal pilot air supply • Pilot air supply is branched internally from port 1 • Port 14 is not available with code V • Port 14 is sealed with a blanking plug for code V1, V3, V2 (ISO 3) • Exhaust air via ports 3 and 5 • For operating pressure in the range 3 ... 10 bar • Pilot exhaust air via port 12 [1] • V1 cannot be selected in combination with a soft-start valve in the last pressure zone
V1	MS			
V3	–			
V2 (ISO3)	–			
X X1	NZ MZ	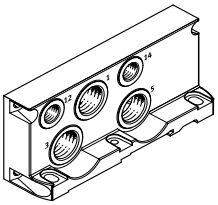	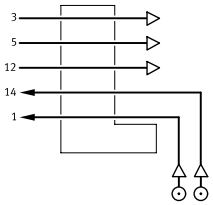	External pilot air supply • Pilot air supply between 2 and 10 bar is connected at port 14 • Exhaust air via ports 3 and 5 • For operating pressure in the range –0.9 ... 10 bar (suitable for vacuum) • Pilot exhaust air via port 12 [1] • X1 cannot be selected in combination with a soft-start valve in the last pressure zone
X3	–			
X2 (ISO3)	–			
XP1	NZAB	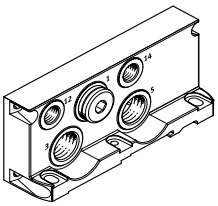	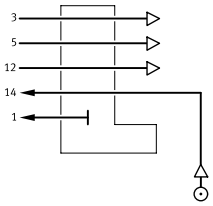	External pilot air supply, compressed air supply via soft-start valve [2] • Port 1 is sealed with a blanking plug • Exhaust air via ports 3 and 5 • Pilot exhaust air via port 12 [1]
XP2	NZABCB	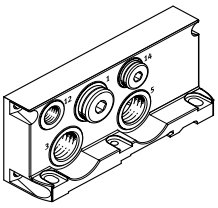	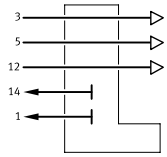	External pilot air supply, compressed air supply via soft-start valve [2] • Internal pilot air supply 14 via soft-start valve • Ports 1 and 14 are sealed • Exhaust air via ports 3 and 5 • Pilot exhaust air via port 12 [1]
XP3	NZABCBGB	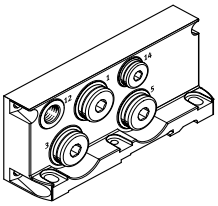	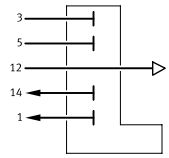	External pilot air supply, compressed air supply via soft-start valve [2] • Internal pilot air supply 14 via soft-start valve • Ports 1, 3, 5 and 14 are sealed • Pilot exhaust air via port 12 [1]
XS	NZCB	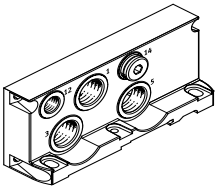	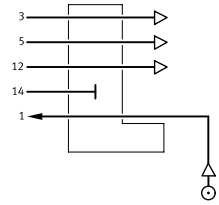	External pilot air supply via pilot air switching valve [3] • Internal pilot air supply 14 via pilot air switching valve • Port 14 is sealed • Exhaust air via ports 3 and 5 • Pilot exhaust air via port 12 [1]

1) Ducted pilot exhaust air is only possible with rotated seals on the valve
2) Application with XP1, XP2, XP3 and soft-start valve in combination with valves of width 52 mm: please note the maximum flow rate of the soft-start valve in this pressure zone
3) Application with XS and pilot air switching valve in combination with intermediate plate

Note

The key features, valves and functions of width 65 mm are described separately in the chapter “Adaptation to width 65 mm, ISO size 3"
➔ page 220.

Key features – Pneumatic components

Right end plate Code [1)] VTSA/VTSA-F	Code VTSA-F-CB	Type of compressed air supply and pilot air supply		Description
End plate with pilot air selector				
Z (1)	YZ	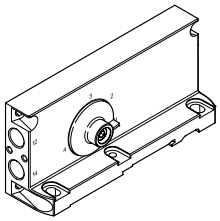	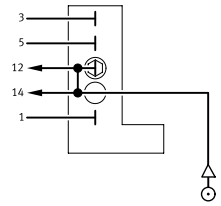	External pilot air supply • Pilot air supply is connected at port 14 • Port 12 is sealed with a blanking plug • Ports 12 and 14 are internally connected • Pilot exhaust air unducted via valve housing
Y (2)	YS	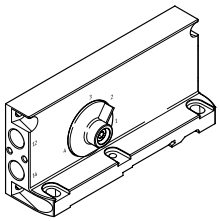	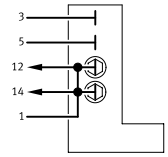	Internal pilot air supply • Pilot air supply is branched internally from port 1 • Ports 1, 12 and 14 are internally connected • Ports 12 and 14 are sealed with blanking plugs • Pilot exhaust air unducted via valve housing
W (3)	–	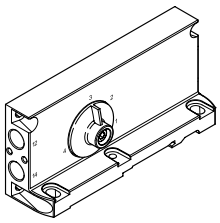	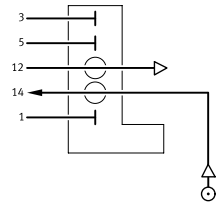	External pilot air supply, ducted pilot exhaust air • Pilot air supply is connected at port 14 • Pilot exhaust air via port 12 [2)] • Cannot be selected in combination with a soft-start valve in the last pressure zone
U (4)	–	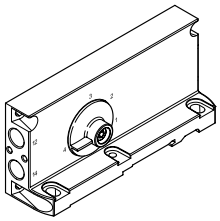	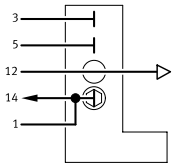	Internal pilot air supply, ducted pilot exhaust air • Pilot air supply is branched internally from port 1 • Ports 1 and 14 are internally connected • Port 14 is sealed with a blanking plug • Pilot exhaust air via port 12 [2)] • Cannot be selected in combination with a soft-start valve in the last pressure zone

1) Selector setting in brackets

2) Ducted pilot exhaust air is only possible with rotated seals on the valve (pilot exhaust air 82/84 including venting air for valves)

Note

The reversible 3/2-way solenoid valves (code P, Q, R) must only be operated in selector position 1 or 2.

Key features – Pneumatic components

Configuration of all pneumatic threaded connections							
Code VTSA/VTSA-F	Code VTSA-F-CB			Connection (duct)	Designation	Code M Push-in connector, large	Code N Push-in connector, small
Right end plate							
V	NS	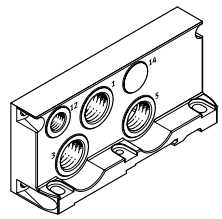	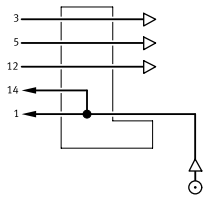	1	Push-in fitting	QS-G1/2-16	QS-G1/2-12
				3 and 5	Silencers or Push-in fitting	U-1/2-B or QS-G1/2-16	U-1/2-B or QS-G1/2-12
				12	Silencers or Push-in fitting	U-1/4 or QS-G1/4-10	U-1/4 or QS-G1/4-8
X	NZ	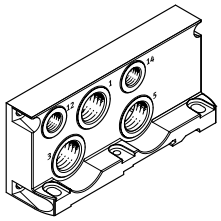	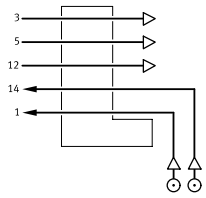	1	Push-in fitting	QS-G1/2-16	QS-G1/2-12
				3 and 5	Silencers or Push-in fitting	U-1/2-B or QS-G1/2-16	U-1/2-B or QS-G1/2-12
				12	Silencers or Push-in fitting	U-1/4 or QS-G1/4-10	U-1/4 or QS-G1/4-8
				14	Push-in fitting	QS-G1/4-10	QS-G1/4-8
V1	MS	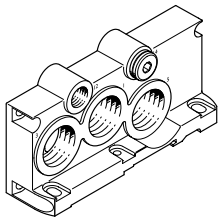	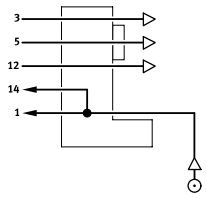	1	Barbed hose fitting	N-3/4-P-19 [1]	–
V3	–			3 and 5	Silencers or Barbed hose fitting	U-3/4-B or N-3/4-P-19 [1]	–
				12	Silencers or Push-in fitting	U-1/4 or QS-G1/4-12	U-1/4 or QS-G1/4-10
				14	Plug	B-1/4	B-1/4
X1	MZ	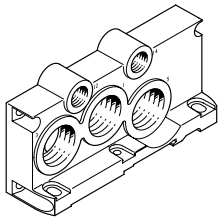	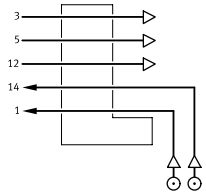	1	Barbed hose fitting	N-3/4-P-19 [1]	–
X3	–			3 and 5	Silencers or Barbed hose fitting	U-3/4-B or N-3/4-P-19 [1]	–
				12	Silencers or Push-in fitting	U-1/4 or QS-G1/4-12	U-1/4 or QS-G1/4-10
				14	Push-in fitting	QS-G1/4-12	QS-G1/4-10

1) For tubing with I.D. 19 mm. Use tubing clips to DIN 3017

Note

The key features, valves and functions of width 65 mm are described separately in the chapter “Adaptation to width 65 mm, ISO size 3"
➔ page 220.

Key features – Pneumatic components

Configuration of all pneumatic threaded connections							
Code [1] VTSA/VTSA-F	Code VTSA-F-CB			Connection (duct)	Designation	Code M Push-in connector, large	Code N Push-in connector, small
End plate with pilot air selector							
Z (1)	YZ	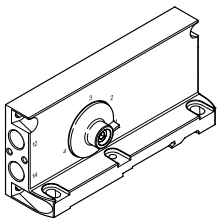	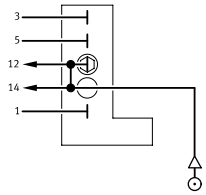	12	Blanking plug	B-1/4	B-1/4
				14	Push-in fitting	QS-G1/4-10	QS-G1/4-8
Y (2)	YS	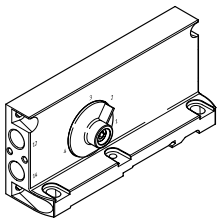	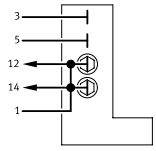	12	Blanking plug	B-1/4	B-1/4
				14	Blanking plug	B-1/4	B-1/4
W (3)	–	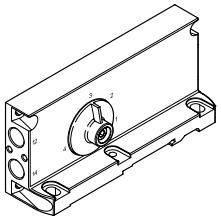	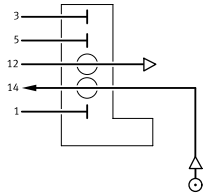	12	Silencers or Push-in fitting	U-1/4 or QS-G1/4-10	U-1/4 or QS-G1/4-8
				14	Push-in fitting	QS-G1/4-10	QS-G1/4-8
U (4)	–	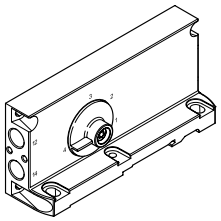	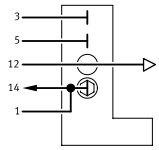	12	Silencers or Push-in fitting	U-1/4 or QS-G1/4-10	U-1/4 or QS-G1/4-8
				14	Blanking plug	B-1/4	B-1/4

1) Selector setting in brackets

Key features – Pneumatic components

Using the seals with ducted/unducted pilot exhaust air

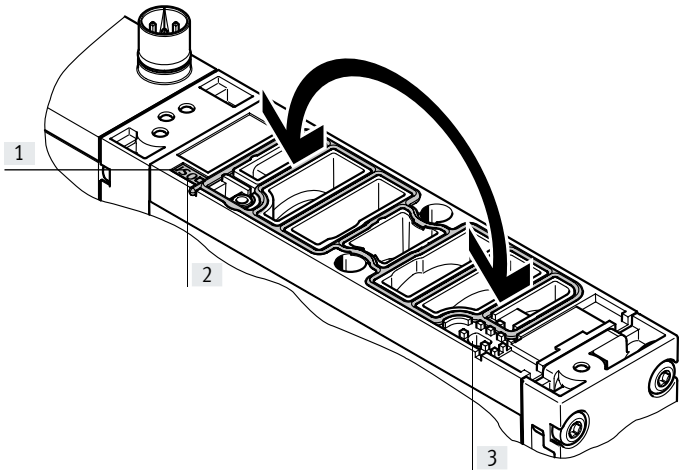

Unducted pilot exhaust air:
- The seal is visible in the display window on control side 14.
- The "ISO" mark is visible on the inscription label on the seal surface.

Ducted pilot exhaust air:
- The seal is visible in the display window on control side 12.
- The "~~ISO~~" mark is visible on the inscription label on the seal surface.

[1] Inscription label
[2] Display window on control side 14 ("ISO" is visible)
[3] Display window on control side 12 ("~~ISO~~" is visible)

Designation	~~ISO~~	ISO
Pilot exhaust air	Ducted	Unducted (standard)
Display window on	Control side 12	Control side 14
Pilot exhaust port	12	–

Pilot air supply

The port for the pneumatic supply is located on the supply plates or the right end plate.

The ports differ for the following types of pilot air supply:
- Internal
- External

Note
If a gradual pressure build-up is required in the system by using a soft-start valve, then external pilot air should be selected so that the pilot pressure is already applied in full at the point of switch-on.

Internal pilot air supply

Internal pilot air supply can be selected if the working pressure is between 3 and 10 bar.

In this case the pilot air supply is branched from the compressed air supply 1 using an internal connection. Port 14 is not available with code V and is sealed with a blanking plug for code V1, V2, V3.

External pilot air supply

If the supply pressure is less than 3 bar, you must operate your valve terminal VTSA/VTSA-F/VTSA-F-CB using external pilot air supply.

The pilot air supply is then supplied via port 14 on the right end plate. This is the case even if the valve terminal is operated with different pressure zones.

Note
When using valves with a width of 65 mm, ISO size 3, the internal/external pilot air supply for the valves with a width of 18 ... 52 mm is provided via the adapter plate VABA-... .
The external pilot air supply for the valves with a width of 65 mm is provided via the right end plate IEPR ....

Key features – Pneumatic components

Creating pressure zones and separating exhaust air

The valve terminal VTSA/VTSA-F/VTSA-F-CB offers a number of options for creating pressure zones if different working pressures are required.
Pressure zones are created by isolating the internal supply ducts between the manifold sub-bases by appropriate duct separation.

Compressed air is supplied and exhausted via a supply plate.
The position of the supply plates and duct separations can be freely selected for VTSA/VTSA-F/VTSA-F-CB.

Duct separations are integrated ex-works as per your order.
Duct separations can be distinguished by their coding, even when the valve terminal is assembled.

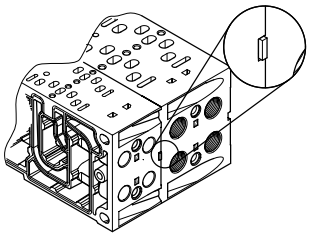

Creating pressure zones

Code	Separating seal			Width				Description
	Illustrated examples	Coding	Basic representation	18 mm	26 mm	42 mm	52 mm	
T	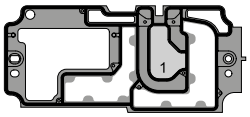	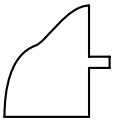	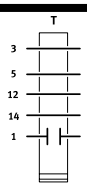	■	■	■	■	Duct 1 separate
S	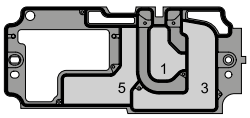	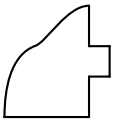	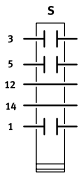	■	■	■	■	Ducts 1, 3 and 5 separate
R	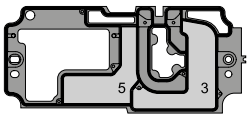	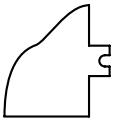	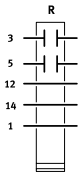	■	■	■	■	Ducts 3 and 5 separate
TL	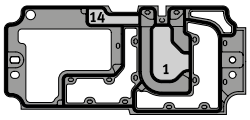	Colour-coded in red	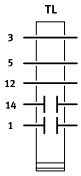	■	■	■	■	Duct 1 and 14 separated
K	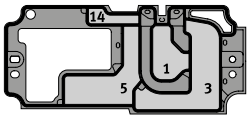	Colour-coded in green	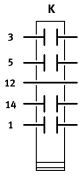	■	■	■	■	Ducts 1, 3, 5 and 14 separate
L	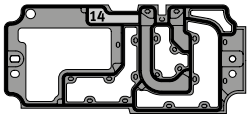	Colour-coded in white	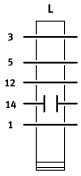	■	■	■	■	Duct 14 separate

Key features – Pneumatic components

Example: Compressed air supply and pilot air supply, right end plate
Internal pilot air supply, silencer/ducted exhaust air

Right end plate: code V and V1

Optional duct separation

The adjacent diagram shows an example of the configuration and connection of the compressed air supply with internal pilot air supply:

- Port 14 is not present with code V and is sealed with a blanking plug for code V1.
- The air is exhausted via the silencer at exhaust port 3/5.
- Duct separations can optionally be used to create pressure zones.

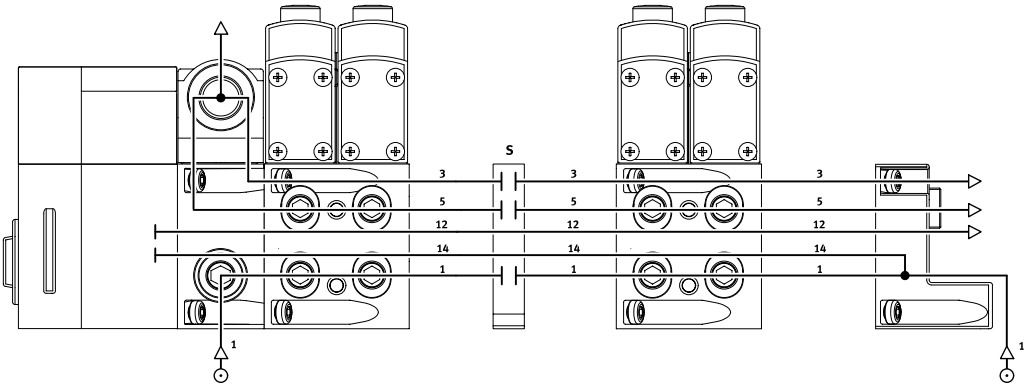

Example: Compressed air supply and pilot air supply, right end plate
External pilot air supply, silencer/ducted exhaust air

Right end plate: code X and X1

Optional duct separation

The adjacent diagram shows an example of the configuration and connection of the compressed air supply with external pilot air supply:

- Port 14 on the right end plate is equipped with a fitting for this.
- The air is exhausted via the silencer at exhaust port 3/5.
- Duct separations can optionally be used to create pressure zones.

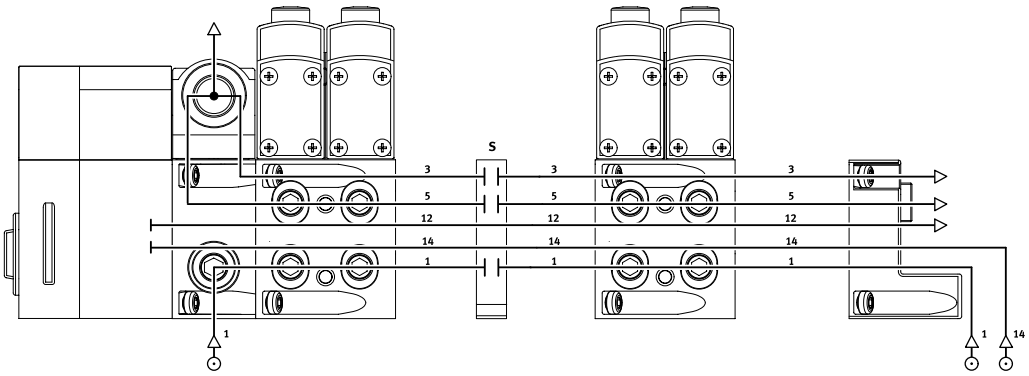

Key features – Pneumatic components – Compressed air supply and pressure zones, examples

Example: Compressed air supply and pilot air supply via end plate with pilot air selector
Internal pilot air supply, ducted exhaust air/silencer

Right end plate: code U

Optional duct separation

The adjacent diagram shows an example of the configuration and connection of the compressed air supply with internal pilot air supply:

- Port 14 on the right end plate is tightly sealed.
- The air is ducted or discharged via the silencer at exhaust port 3/5.
- The selector switch on the pilot air selector is in position 4.
- Duct separations can optionally be used to create pressure zones.

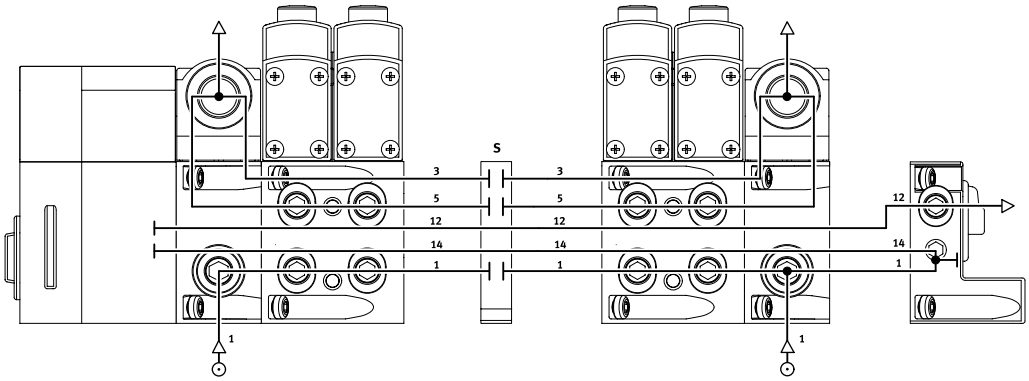

Example: Compressed air supply and pilot air supply via end plate with pilot air selector
External pilot air supply, ducted exhaust air/silencer

Right end plate: code Z

Optional duct separation

The adjacent diagram shows an example of the configuration and connection of the compressed air supply with external pilot air supply:

- Port 14 on the right end plate is equipped with a fitting for this.
- Port 12 is sealed with a blanking plug since it is internally connected with port 14.
- The air is ducted or discharged via the silencer at exhaust port 3/5.
- The selector switch on the pilot air selector is in position 1.
- Duct separations can optionally be used to create pressure zones.

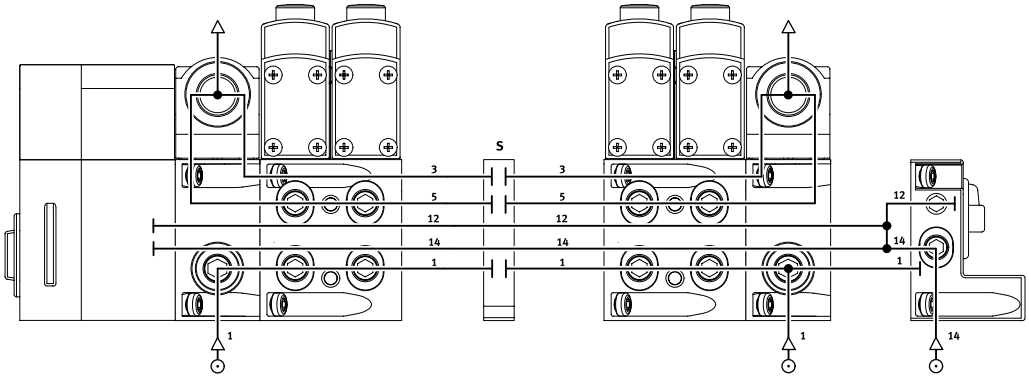

Key features – Pneumatic components – Compressed air supply and pressure zones, examples

Examples: Creating pressure zones

VTSA/VTSA-F/VTSA-F-CB with CPX terminal

With the VTSA/VTSA-F/VTSA-F-CB up to 16 pressure zones can be created (up to 32 pressure zones if only size 1, ISO 5599-2, is fitted). The diagram shows an example of the configuration and connection of three pressure zones using duct separations – with internal pilot air supply.

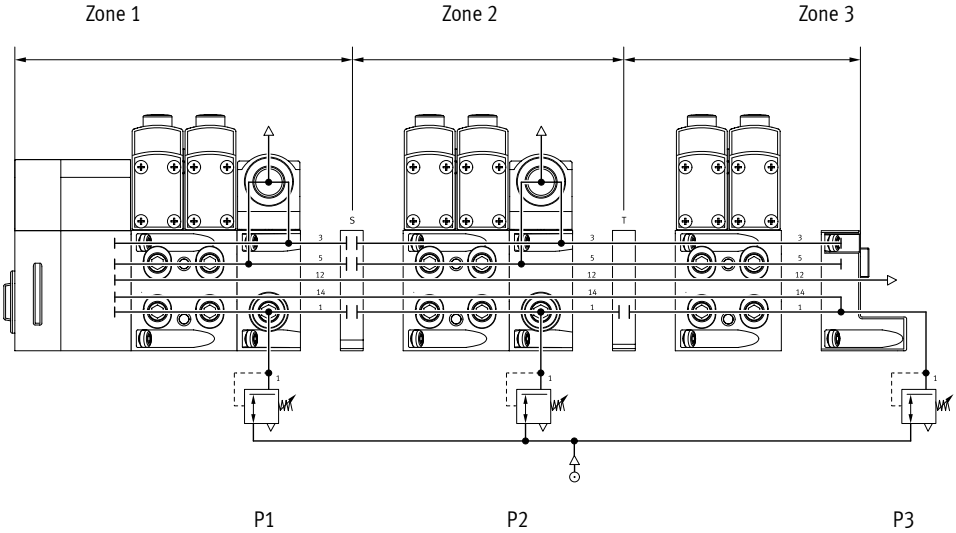

Note

Examples with pressure zones and soft-start valve are described separately in the chapter "Soft-start valve"
➔ page 190.

Key features – Mounting

Valve terminal mounting

Sturdy valve terminal mounting thanks to:

- Through-holes for wall mounting
- Additional mounting brackets
- H-rail mounting for VTSA/VTSA-F (horizontal mounting position permitted)

Note

Further information on mounting the valve terminal, arranged by valve terminal configuration, can be found on the catalogue DVD or online.

➔ Internet: 2D/3D-CAD

➔ www.festo.com/sp

Wall mounting, general

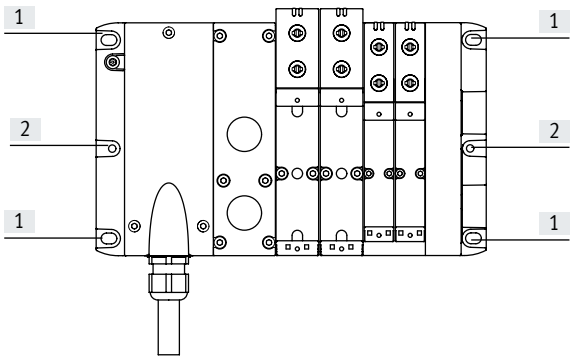

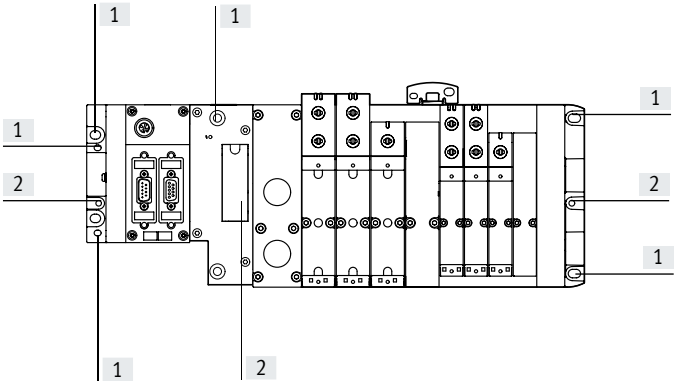

[1] Drilled hole for M6 screw

[2] Drilled hole for H-rail mounting

The valve terminal VTSA/VTSA-F/VTSA-F-CB is screwed onto the mounting surface using M6 screws. The mounting holes are located at the following points:

- Multi-pin plug (4 pieces); 2 each on the multi-pin manifold block and the right end plate
- Fieldbus, CPX (6 pieces); 2 each on the left (CPX) and right (VTSA/VTSA-F) end plate and the pneumatic interface
- I-Port/IO-Link (4 pieces); 2 each on the I-Port/IO-Link interface and on the right end plate

Mounting brackets can be mounted on pneumatic supply plates and manifold sub-bases.

If using CPX components, see:

➔ Internet: cpx

Note

Wall mounting of the VTSA/VTSA-F/VTSA-F-CB with more than 5 pneumatic modules

Note the following information to avoid damage to the valve terminal:

- Additionally use mounting brackets of the type VAME-6-W-M46
- Mount these on each fourth plate (manifold sub-base, supply plate or exhaust plate), counting from left to right, starting after the pneumatic interface.
- No mounting bracket is required next to the right end plate.
- Use the pre-assembled mounting brackets when mounting factory pre-assembled valve terminals on a wall.

Key features – Mounting

Wall mounting with CPX polymer interface

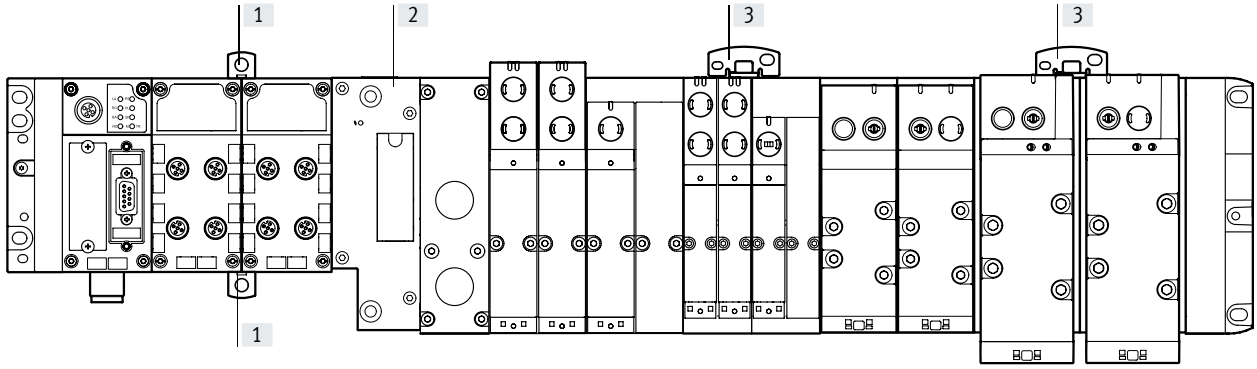

[1] Additional wall mounting for polymer CPX terminal

[2] Pneumatic interface

[3] Additional wall mounting for VTSA/VTSA-F/VTSA-F-CB (with drilled hole for M5 and M6 screw)

In the case of CPX terminals in polymer design with 4 and more interlinking blocks, additional wall mountings of the type CPX-BG-RW must be used every 100 ... 150 mm. These mountings are clipped in at the top and bottom between the CPX modules.

In the case of the VTSA/VTSA-F/VTSA-F-CB, mounting brackets must be mounted on the wall as indicated above.
Brackets of the type VAME-S6-W-M46 must be used as an additional wall mounting.

Key features – Mounting

Wall mounting with CPX metal interface

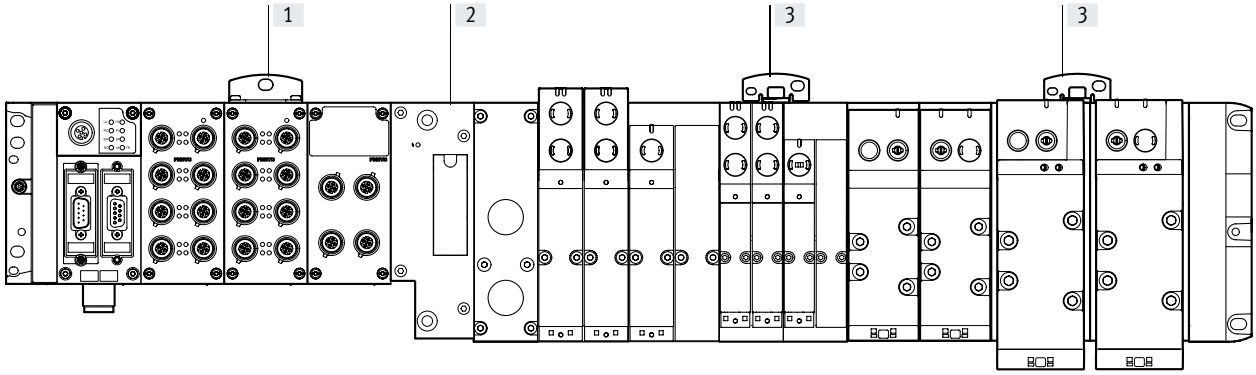

[1] Additional wall mounting for metal CPX terminal

[2] Pneumatic interface

[3] Additional wall mounting for VTSA/VTSA-F/VTSA-F-CB (with drilled hole for M5 and M6 screw)

In the case of CPX terminals in metal design with 4 and more interlinking blocks, additional wall mountings of the type CPX□M□BG-RW must be used every 100 ... 150 mm. These wall mountings are screwed in at the top of the corresponding CPX module.

In the case of the VTSA/VTSA-F/VTSA-F-CB, mounting brackets must be mounted on the wall as indicated above.
Brackets of the type VAME-S6-W-M46 must be used as an additional wall mounting.

Mounting on support system with CPX metal interface

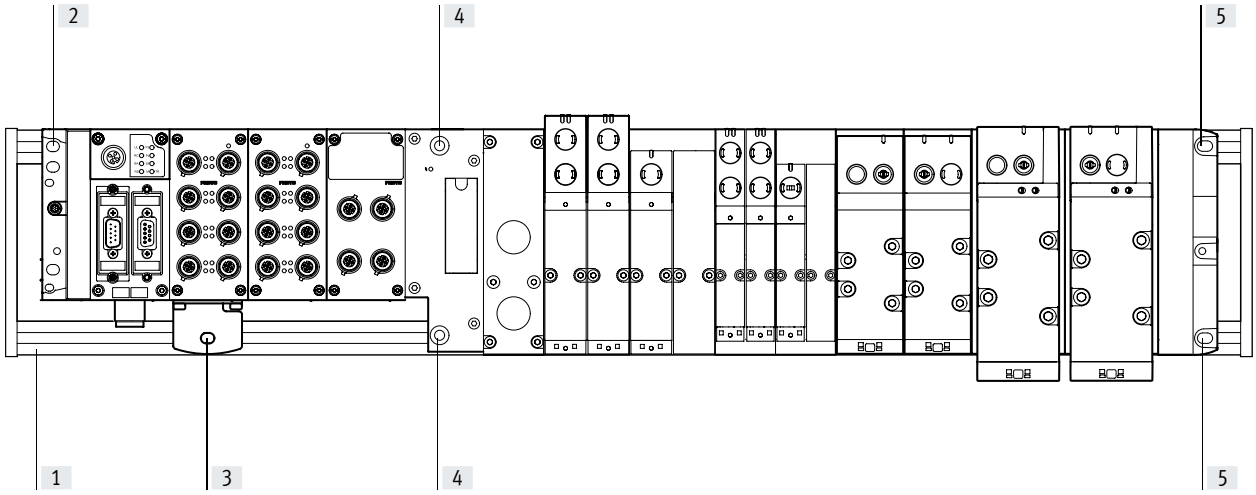

[1] Support system (DIN mounting rail)

[2] Upper mounting for metal CPX terminal, left end plate on DIN mounting rail

[3] Lower mounting for metal CPX terminal on DIN mounting rail with mounting bracket CPX-M-BG-VT-2X

[4] Mounting for pneumatic interface on DIN mounting rail

[5] Mounting for right end plate on DIN mounting rail

If a metal terminal CPX with VTSA pneumatic components is mounted on DIN mounting rails, it may be necessary to have one or more mounting brackets on the CPX side to compensate for the length. It is possible to compensate for the length by using special mounting brackets CPX-M-BG-VT-2X. The mounting bracket connects the metal terminal CPX to the DIN mounting rail.

Note

- Only metal CPX modules with VTSA/VTSA-F/VTSA-F-CB modules of width 18 ... 52 mm must be used.
- The number of mounting brackets required depends on the number of CPX modules installed and whether any system feeds are present.

Further information about mounting the valve terminal can be found in the assembly instructions in the Festo Support Portal
→ Internet: 2D/3D-CAD
→ www.festo.com/sp

Key features – Mounting

H-rail mounting (not permitted for all VTSA-F-CB combinations)

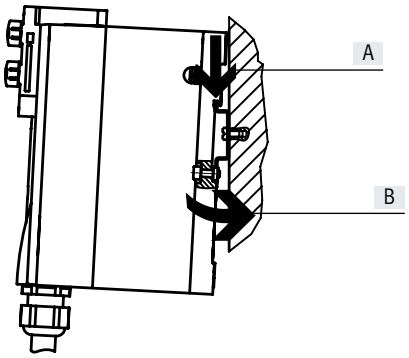

The valve terminal VTSA/VTSA-F/VTSA-F-CB is hooked onto the H-rail (see arrow A).
The valve terminal VTSA/VTSA-F/VTSA-F-CB is then swivelled onto the H-rail and secured in place with the clamping element (see arrow B).

To mount the valve terminal VTSA/VTSA-F/VTSA-F-CB on an H-rail, you will need the mounting kit CPX-CPA-BG-NRH:

This enables the valve terminal to be mounted on an H-rail to EN 60715.

Note

- Wall mounting is recommended if more than one vertical stacking element or a long valve terminal design is required.
- Vibration/shock loads are not permissible with H-rail mounting.
- Only a horizontal mounting position is permissible for H-rail mounting.
- Valve terminals VTSA-F-CB with pneumatic interface with voltage zones cannot be used for H-rail mounting.

Individual valve mounting

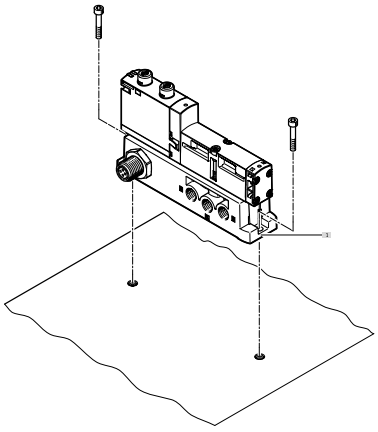

[1] Vertical mounting holes

The individual sub-base for wall mounting is designed for integration into a system or machine. It is mounted vertically.

Key features – Display and operation

Display and operation

Each solenoid coil is allocated an LED which indicates its switching status.

- Indicator 12 shows the switching status of the pilot control for output 2
- Indicator 14 shows the switching status of the pilot control for output 4

Manual override (MO):
The manual override enables the valve to be switched when not electrically actuated or when de-energised.
The valve is switched by pushing the manual override. The set switching status can also be locked by turning the manual override.

Alternatives:

- The cover cap (code N) limits the function of the manual override, preventing it from being locked. The valve can then only be actuated as non-detenting.
- The cover cap (code V) can be used to secure the manual override against accidental actuation.
- The heavy-duty cover cap protects the manual override located on the valve. The valve can be actuated as non-detenting or as detenting via accessory.

Note

Special valve variants with pre-assembled cover caps for the manual override are available for valve terminal VTSA/VTSA-F/VTSA-F-CB.

Pneumatic connection and control elements

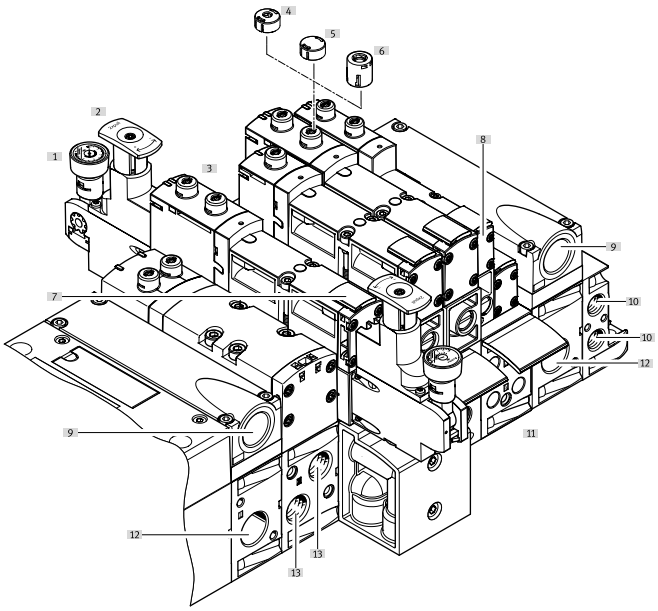

[1] Pressure gauge (optional)
[2] Adjusting knob for optional pressure regulator plate
[3] Manual override (MO) (for each pilot solenoid coil, non-detenting or non-detenting/detenting)
[4] Cover cap for MO, non-detenting
[5] Cover cap for MO, concealed
[6] Cover cap for MO, non-detenting heavy duty, detenting via accessory
[7] Inscription label holder for valve
[8] Adjusting screw of optional throttle plate
[9] Exhaust ports "Valves" (3/5)
[10] Pilot ports 12 and 14 for supplying the external pilot air
[11] Inscription label holder for subbase
[12] Supply port 1 (operating pressure)
[13] Working ports 2 and 4, per valve position

Note

A manually operated valve (manual override) cannot be reset electrically. Conversely, an electrically actuated valve cannot be reset using the mechanical manual override.

Key features – Display and operation

Display and operation

Electrical connection and display elements for VTSA/VTSA-F

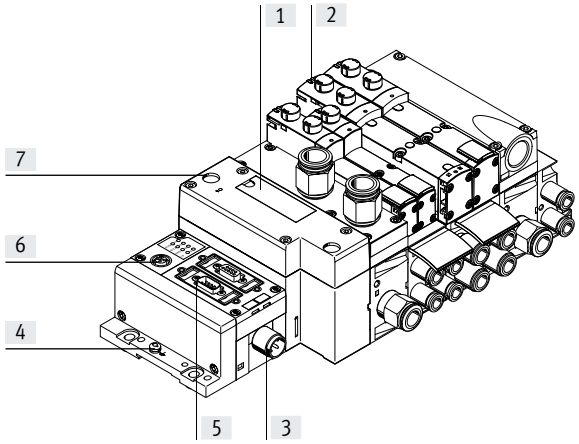

[1] Inscription area and cover for H-rail mounting
[2] Yellow LEDs, signal status indication for the pilot solenoid coils
[3] Power supply connection
[4] Earthing connection
[5] Fieldbus interface (bus-specific)
[6] Service interface for handheld unit, etc.
[7] Red LED: common error display for valves

Electrical connection and display elements for VTSA-F-CB

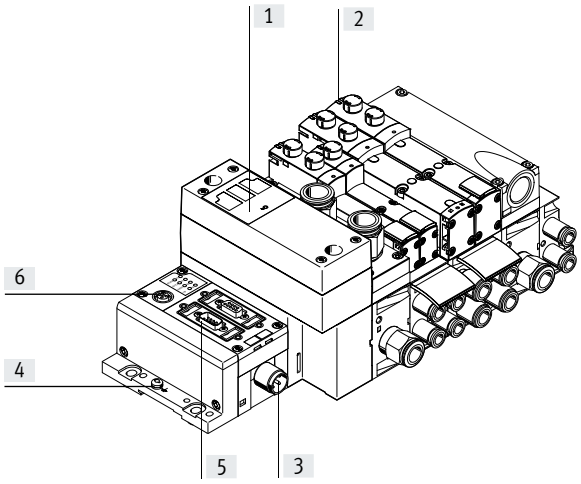

[1] LED indicators for operating status/diagnostics of the pneumatic interface
[2] Yellow LEDs, signal status indication for the pilot solenoid coils
[3] Power supply connection
[4] Earthing connection
[5] Fieldbus interface (bus-specific)
[6] Service interface for handheld unit, etc.

Key features – Display and operation

Manual override (MO) – Function

MO with automatic return (non-detenting),

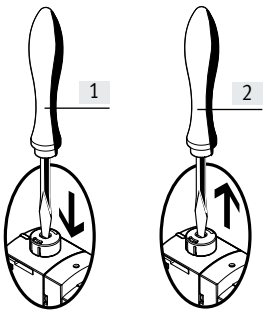

[1] Press in the plunger of the manual override using a pointed object or screwdriver.
The valve is in the switching position.

[2] Remove the pointed object or screwdriver.
The spring force pushes the plunger of the manual override back.
The valve returns to its normal position (not with double solenoid valve code J or D).

MO with locking (detenting)

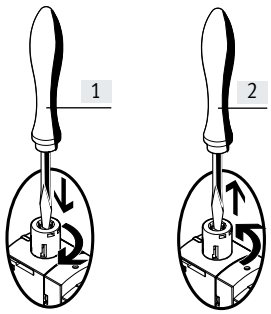

[1] Press in the plunger of the manual override using a pointed object or screwdriver until the valve switches and then turn the plunger 90° clockwise until the stop is reached.
Valve remains in switching position.

[2] Turn the plunger 90° anti-clockwise until the stop is reached and then remove the pointed object or screwdriver. The spring force pushes the plunger of the manual override back. The valve returns to its normal position (not with double solenoid valve code J or D).

Cover caps for manual override

Cover cap for MO, heavy-duty, with automatic reset (non-detenting/detenting via accessory)

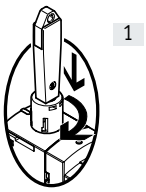

[1] Non-detenting:
Push in key for MO. The valve is in the switching position.
Detenting:
Turn the coded key in switching position 90° clockwise until the stop is reached. Valve remains in switching position. In this position the key is latched and cannot be removed.

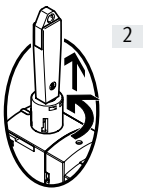

[2] Turn the key 90° anti-clockwise until the stop is reached. The key is now unlatched. The key is pushed out by the spring force of the manual override. The valve returns to its normal position (not with double solenoid valve code J or D).

Cover cap for MO, with automatic return (non-detenting)

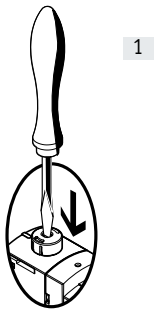

[1] Restricted function, non-detenting: push in the plunger of the MO cap using a pointed object or screwdriver. The valve is in the switching position.

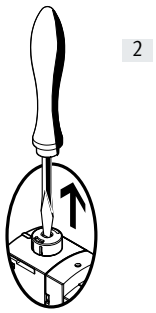

[2] Remove the pointed object or screwdriver.
The spring force pushes the plunger of the manual override back.
The valve returns to its normal position (not with double solenoid valve code J or D).

Cover cap for MO, concealed

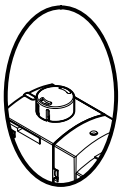

When concealed by the cover cap, the MO can be secured against accidental actuation.

Note

Cover caps for the manual override can be ordered separately as accessories.
There are also variants of the VSVA valve with pre-assembled cover caps.

Key features – Display and operation

Overview of valve variants and cover caps for manual override (MO)

Illustration	Terminal code	Description of valve terminal order code	Manual override (MO)	Valve code identification on rating plate sticker[1]
Solenoid valve VSVA without cover cap				
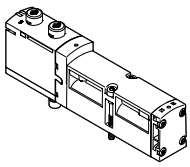	R	Without cover cap on MO	Non-detenting, detenting	VSVA-B- ... -MZD- ...
Solenoid valve VSVA with pre-assembled cover cap on MO				
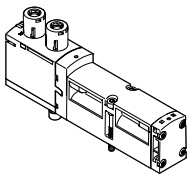	B	MO non-detenting/heavy duty with cover cap, can be used as detenting via accessory (key), as valve variant	Non-detenting, detenting via accessory (key)	VSVA-B- ... -MZTR- ...
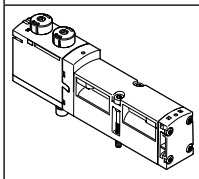	C	MO can only be used as non-detenting with coded cover cap, as valve variant	Non-detenting	VSVA-B- ... -MZH- ...
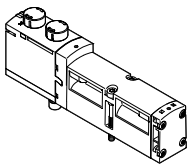	D	MO concealed by cover cap – operation of MO prevented, as valve variant	Concealed	VSVA-B- ... -MZ- ...
Cover caps for MO				
	N	MO can only be used as non-detenting with coded cover cap	Non-detenting	VSVA-B- ... -MZD- ...
	V	MO concealed by cover cap – operation of MO prevented	Concealed	VSVA-B- ... -MZD- ...
	A	MO non-detenting/heavy duty with cover cap, detenting via accessory (key)	Non-detenting, detenting via accessory	VSVA-B- ... -MZD- ...
Accessories for manual override, heavy duty				
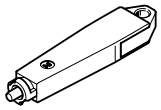	–	Coded key (accessory) for actuating the MO, non-detenting/heavy duty, for detenting position	For manual override, detenting	–

1) As an example, the part code for a 5/2-way single solenoid valve, mechanical spring return is used here (e.g.: VSVA-B-M52-MZTR-A2-1T1L)

Note

Cover caps for non-detenting/heavy duty manual override, detenting via accessory, are provided for one-off use only.
If they are used more than once, reliable locking of the cover cap cannot be guaranteed.

Key features – Display and operation, VTSA-F-CB

Overview of valve variants and cover caps for manual override (MO) for VTSA-F-CB

Illustration	Terminal code	Description of valve terminal order code	Manual override (MO)	Valve code identification on the rating plate sticker[1)]
Solenoid valve VABF, vacuum generator				
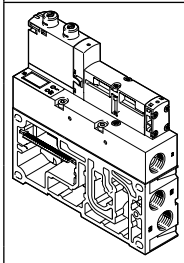	ZQN	MO can only be used as non-detenting with coded cover cap, as valve variant	Non-detenting	VABF-S4-2-V2B1-G38 ...
	ZQR	Non-detenting MO, can be used as detenting, as valve variant	Non-detenting, detenting without accessories	VABF-S4-2-V2B1-G38 ...
	ZQV	MO concealed by cover cap – operation of MO prevented, as valve variant	Concealed	VABF-S4-2-V2B1-G38 ...
	ZQA	MO non-detenting/heavy duty with cover cap, can be used as detenting via accessory (key), as valve variant	Non-detenting, detenting via accessory (key)	VABF-S4-2-V2B1-G38 ...
Solenoid valve VABF, soft-start valve				
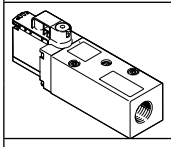	ZQZ	The manual override can be reset in two ways: • manually or • electrically via control signal	Detenting, electrically self-resetting	VABF-S6-1-P5A4 ... YE ...
	ZQX	Manual override, concealed	None	VABF-S6-1-P5A4 ... S ...
Solenoid valve VSVA, pilot air switching valve				
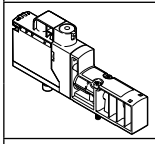	–	The manual override can be reset in two ways: • manually or • electrically via control signal	Detenting, electrically self-resetting (default)	VSVA-BT-M32CS... YE ...
	ZZ	Manual override, concealed	None	VSVA-BT-M32CS ... S ...
Accessories for manual override, heavy duty				
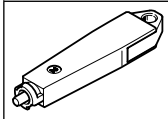	–	Coded key (accessory) for actuating the MO, non-detenting/heavy duty, for detenting position	For manual override, detenting	–

1) As an example, the part code for a 5/2-way single solenoid valve, mechanical spring return is used here (e.g.: VSVA-B-M52-MZTR-A2-1T1L)

Note

Cover caps for non-detenting/heavy duty manual override, detenting via accessory, are provided for one-off use only.
If they are used more than once, reliable locking of the cover cap cannot be guaranteed.

Key features – Electric components

Inscription system

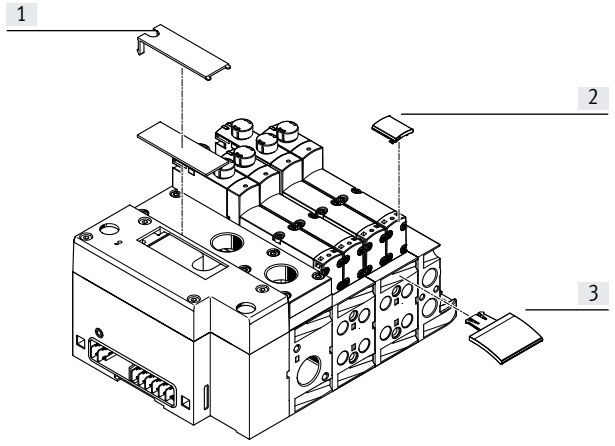

[1] Inscription area (approx. 20 x 45 mm)
[2] Inscription label holder for valve ASCF-T-S6 (17 x 12.5 mm), ASCF-T-S6-Z
[3] Inscription label holder for manifold sub-base ASCF-M-S6, ASCF-M-S2-2

Inscription label holders can be applied to the valves and manifold sub-bases to identify them. These inscription label holders can be ordered by entering the code B or T in the order code for accessories.
Scope of delivery: inscription label holder including inscription label.
The following inscription labels can be used as spares:

- Inscription label holder for valve type ASCF-T-S6: part no. 540888
- Inscription label holder with additional fields for marking valve type ASCF-T-S6-Z: part no. 8106532
- Inscription label holder for manifold sub-base type ASCF-M-S6: part no. 540889
- Inscription label holder for manifold sub-base (for valve width 52 mm) type ASCF-M-S2-2: part no. 562577

Large inscription labels can be attached to the pneumatic interface as an alternative or in addition to the smaller labels.

Protective circuit

Each solenoid coil VSVA is provided with a spark arresting protective circuit and protected against polarity reversal.

The 24 V DC version of width 52 mm additionally features integrated holding current reduction.

24 V DC version (width 18 to 42 mm)

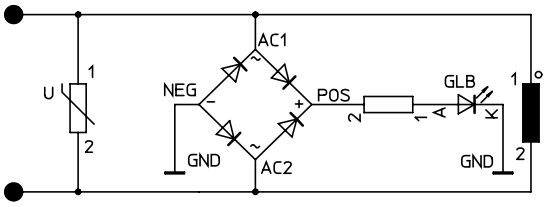

24 V DC version (width 52 mm)

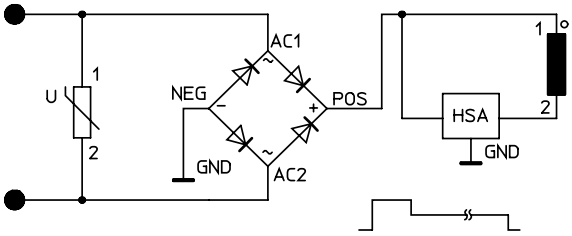

Note

- All control signals of the solenoid coils of a valve terminal share a common load (independent of whether multi-pin, AS-i or CPX).
- With the valve terminal VTSA-F-CB, the common load always refers to a common voltage zone.
- A configuration combining VTSA/VTSA-F and VTSA-F-CB is not permitted.

Key features – Electric components

Individual valve

Valves on individual sub-bases can be used for actuators that are further away from the valve terminal.

- Electrical connection M12, 4-pin
  24 V DC
- 4-pin clamped terminal connection for configuration by the user
  24 V DC
- Cable (open end) for configuration by the user
  24 V DC

Individual electrical connection

A maximum of 20 solenoid coils can be actuated. 2 solenoid coils per valve can be addressed.

Individual electrical connection:
- M12
- 6-way or 10-way
- 5-pin
- 24 V DC

Electrical multi-pin plug connection

The following multi-pin plug connection variants are offered for the valve terminal VTSA/VTSA-F:
- Sub-D multi-pin plug connection (37-pin for 24 V DC): This valve terminal can be equipped with
  1 ... 16 valve positions (with double solenoid valves), or with
  1 ... 32 valve positions (with single solenoid valves). A maximum of 32 solenoid coils can be actuated.
- Terminal box (terminal strip for 24 V DC): This valve terminal can be equipped with 1 ... 16 valve positions (with double solenoid valves), or with 1 ... 32 valve positions (with single solenoid valves).
  A maximum of 32 solenoid coils can be actuated.
- Multi-pin node (round plug): electrical multi-pin plug connection with round plug, 19-pin to CNOMO E03.62.530.N, connecting thread M23 for 24 V DC. The valve terminal can be fitted with max. 16 solenoid coils.

The valves are switched by positive or negative logic (PNP or NPN). Mixed operation is not permissible because all control signals of the solenoid coils of a valve terminal share a common load.

Each pin on the multi-pin plug (Sub-D) or terminal box (terminal strip) can actuate exactly one solenoid coil. When using the maximum configurable number of 32 valve positions, 32 valves can be addressed, each with a single solenoid coil.
With 16 or fewer valve positions, 2 solenoid coils per valve can be addressed.

Note

Use the following 37-pin connecting cables from Festo to connect the valve terminal VTSA/VTSA-F with Sub-D multi-pin plug connection:
- NEBV-...-LE10 for max. 8 solenoid coils
- NEBV-...-LE26 for max. 22 solenoid coils
- NEBV-...-LE27 for max. 23 solenoid coils
- NEBV-...-LE37 for max. 32 solenoid coils
- NECV-S1W37 pre-assembled plug connector

AS-Interface connection

Valve terminals VTSA/VTSA-F with AS-Interface connection can be expanded with up to 8 valves with max. 8 solenoid coils.

The valve terminal with AS-Interface connection is based on the same electrical links as the valve terminal with multi-pin plug connection.

This means a valve terminal with multi-pin plug connection can be converted using an AS-Interface module.
The technical specifications of the AS-Interface system must be observed in this case.

Note

AS-i module VAEM-S6-S-FAS-4-4E. Always operate the AS-i module with additional power supply if max. 4 solenoid coils (width 52 mm) are simultaneously supplied with current.
More information can be found at:
➔ Internet: as-interface

Fieldbus interface/control block

All functions and features of the electrical peripherals CPX are permitted in connection with the CPX interface. This means that:

- The valves and electrical outputs are supplied via the operating voltage connection CPX
- The valves are supplied and switched off independently via a separate port on the CPX

Note

More information can be found at:
➔ Internet: cpx

Key features – Electric components

I-Port/IO-Link

Valve terminals VTSA/VTSA-F with I-Port/IO-Link connection can be expanded with up to 16 valves with max. 32 solenoid coils.

The valve terminal with I-Port/IO-Link connection is based on the same electrical interlinking as the valve terminal with multi-pin plug connection.

This means a valve terminal with multi-pin plug connection can be converted using an I-Port/IO-Link module. The technical specifications of the I-Port/IO-Link system must be observed in this case.

Note

AS-i module VAEM-S6-S-FAS-4-4E. Always operate the AS-i module with additional power supply if max. 4 solenoid coils (width 52 mm) are simultaneously supplied with current.

More information can be found at:
➔ Internet: i-port, io-link

Key features – Electric components

Rules for addressing

Address allocation	Single solenoid valve	Double solenoid valve	Connecting cable
Address allocation doesn't depend on whether single or double solenoid valves are fitted. Addresses are assigned in ascending order without gaps, from left to right.	A valve position for actuating one solenoid coil (VABV...T1) occupies one address.	A valve position for actuating two solenoid coils (VABV...T2) occupies two addresses. The following assignment applies in this case: • Coil 14: lower-value address • Coil 12: higher-value address	The wire colours refer to the following pre-assembled connecting cables from Festo: • NEBV-...-LE10 for valve terminal with max. 8 solenoid coils • NEBV-...-LE26 for valve terminal with max. 22 solenoid coils • NEBV-...-LE27 for valve terminal with max. 23 solenoid coils • NEBV-...-LE37 for valve terminal with max. 32 solenoid coils

Pin allocation – Multi-pin plug, Sub-D socket, 24 V DC, electrical control code MP1

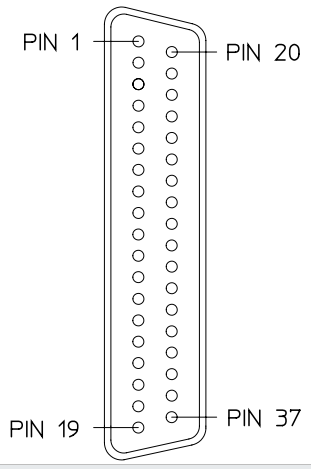

Pin[2]	Address/coil	Wire colour [1]		Pin [2]	Address/coil	Wire colour [1]
1	0	WH		17	16	WH PK
2	1	BN		18	17	PK BN
3	2	GN		19	18	WH BU
4	3	YE		20	19	BN BU
5	4	GY		21	20	WH RD
6	5	PK		22	21	BN RD
7	6	BU		23	22	GY GN
8	7	RD		24	23	YE GY
9	8	GY PK		25	24	PK GN
10	9	RD BU		26	25	YE PK
11	10	WH GN		27	26	GN BU
12	11	BN GN		28	27	YE BU
13	12	WH YE		29	28	GN RD
14	13	YE BN		30	29	YE RD
15	14	WH GY		31	30	GN BK
16	15	GY BN		32	31	GY BU
Conductor						
33	0 V[3]	YE BK		35	0 V[3]	BN BK
34	0 V[3]	WH BK		36	0 V[3]	BK
Earthing						
37	FE	VT		–	–	–

Note

The drawing shows a plan view of the Sub-D plug socket at the connecting cable NEBV-...

1) To IEC 757
2) Pin 9 ... 35: not allocated in the case of connecting cable NEBV-...-LE10
Pin 23 ... 33: not allocated in the case of connecting cable NEBV-...-LE26
Pin 24 ... 33: not allocated in the case of connecting cable NEBV-...-LE27
3) Connect 0 V for positive-switching control signals, 24 V for negative-switching control signals. Mixed operation is not permissible because all control signals of the solenoid coils of a valve terminal share a common load!

Key features – Electric components

Dimensions Download CAD data ➔ www.festo.com

Connecting cable NEBV-...

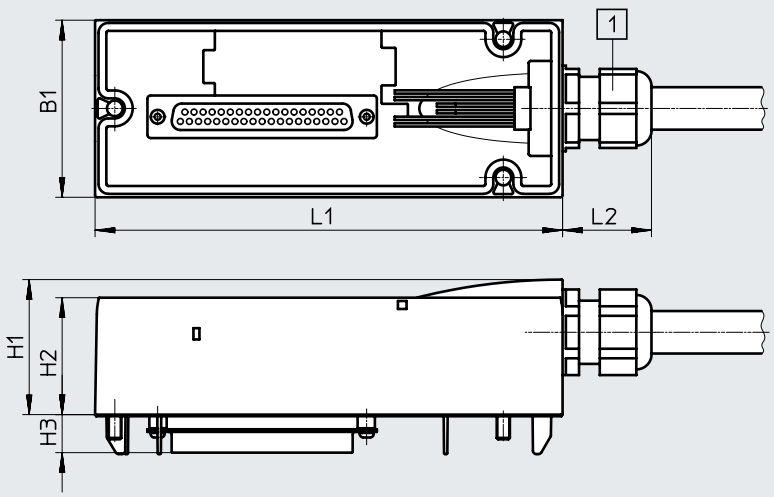

[1] Cable connector M20x1.5

Type	B1	H1	H2	H3	L1	L2
NEBV-...	54	41	36	11.6	142	27

Ordering data – Connecting cable, Sub-D, 24 V DC, electrical control code MP1

	Cable sheath	Connecting cable	Length [m]	Part no.	Type
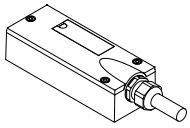	TPE-U(PUR)	For max. 8 solenoid coils, 10-core	2.5	**539240**	**NEBV-S1W37-E-2.5-LE10**
			5	**539241**	**NEBV-S1W37-E-5-LE10**
			10	**539242**	**NEBV-S1W37-E-10-LE10**
		For max. 22 solenoid coils, 26-core	2.5	**539243**	**NEBV-S1W37-E-2.5-LE26**
			5	**539244**	**NEBV-S1W37-E-5-LE26**
			10	**539245**	**NEBV-S1W37-E-10-LE26**
		For max. 32 solenoid coils, 37-core	2.5	**539246**	**NEBV-S1W37-K-2.5-LE37**
			5	**539247**	**NEBV-S1W37-K-5-LE37**
			10	**539248**	**NEBV-S1W37-K-10-LE37**
	PVC	For max. 8 solenoid coils, 10-core	2.5	**543271**	**NEBV-S1W37-KM-2.5-LE10**
			5	**543272**	**NEBV-S1W37-KM-5-LE10**
			10	**543273**	**NEBV-S1W37-KM-10-LE10**
		For max. 23 solenoid coils, 27-core	2.5	**543274**	**NEBV-S1W37-KM-2.5-LE27**
			5	**543275**	**NEBV-S1W37-KM-5-LE27**
			10	**543276**	**NEBV-S1W37-KM-10-LE27**
		For max. 32 solenoid coils, 37-core	2.5	**543277**	**NEBV-S1W37-KM-2.5-LE37**
			5	**543278**	**NEBV-S1W37-KM-5-LE37**
			10	**543279**	**NEBV-S1W37-KM-10-LE37**

Key features – Electric components

Pin allocation – Multi-pin, terminal strip (Cage Clamp), 24 V DC; electrical control code T (based on standard: EN 61984)

Each solenoid coil is assigned to a specific terminal on the terminal strip in order for the valves to be actuated.

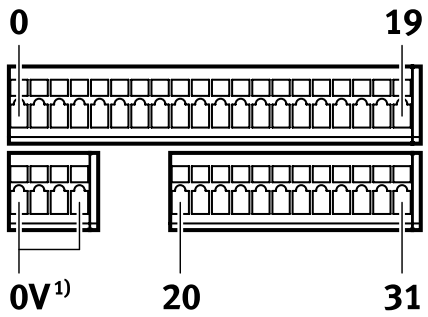

Terminal	Coil/address		Terminal	Coil/address
1	0		17	16
2	1		18	17
3	2		19	18
4	3		20	19
5	4		21	20
6	5		22	21
7	6		23	22
8	7		24	23
9	8		25	24
10	9		26	25
11	10		27	26
12	11		28	27
13	12		29	28
14	13		30	29
15	14		31	30
16	15		32	31
Conductor				
33	0 V		35	0 V
34	0 V		36	0 V

Note

The drawing shows a plan view of the multi-pin terminal strip (Cage Clamp).

Pin allocation – Multi-pin, round plug, 24 V DC; electrical control code MP4

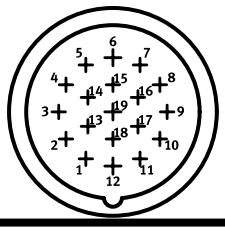

Address	Pin 1)		Address	Pin 1)
0	15		8	17
1	7		9	9
2	5		10	2
3	4		11	13
4	16		12	11
5	8		13	10
6	3		14	1
7	14		15	18

Pin allocation – Multi-pin plug, round plug, 24 V DC; electrical actuation – CNOMO allocation

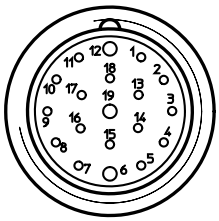

Pin	Valve position/solenoid coil		Pin	Valve position/solenoid coil
1	8/14		10	7/12
2	6/14		11	7/14
3	4/14		12	FE
4	2/12		13	6/12
5	2/14		14	4/12
6	0 V 1)		15	1/14
7	1/12		16	3/14
8	3/12		17	5/14
9	5/12		18	8/12
			19	Not assigned

1) Pin 6: 0 V for positive-switching control signals; connect 24 V for negative-switching control signals; mixed operation is not permitted!
Pin 12: earth
Pin 19: not allocated

Key features – Electric components

Electrical connection, individual valve with connector plug 24 V DC up to width 52 mm

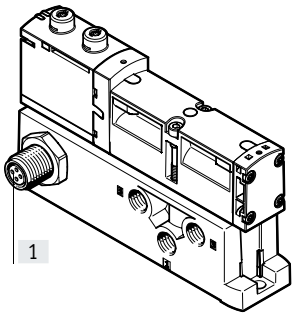

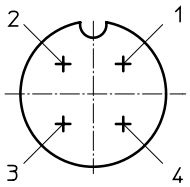

[1] 1xM12 plug, 4-pin to EN 61076-2-101

Pin allocation M12 on individual valve to ISO 20401

With positive logic:
- Pin1 – Not allocated
- Pin2 – U_B for coil 12
- Pin3 – 0 V for coil 12 and 14
- Pin4 – U_B for coil 14

With negative logic:
- Pin1 – Not allocated
- Pin2 – 0 V for coil 12
- Pin3 – U_B for coil 12 and 14
- Pin4 – 0 V for coil 14

Electrical connection, individual valve 24 V DC up to width 52 mm

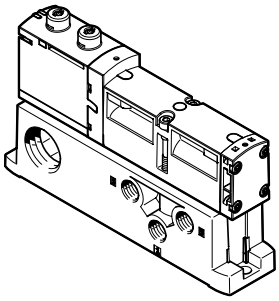

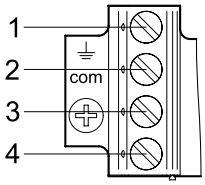

Pin allocation for assembly by the user

With positive logic:
- Pin1 – Not allocated
- Pin2 – U_B for coil 12
- Pin3 – 0 V for coil 12 and 14
- Pin4 – U_B for coil 14

With negative logic:
- Pin1 – Not allocated
- Pin2 – 0 V for coil 12
- Pin3 – U_B for coil 12 and 14
- Pin4 – 0 V for coil 14

Individual electrical connection, 6-way or 10-way, 24 V DC, code MP2/MP3 for valve terminal up to width 52 mm

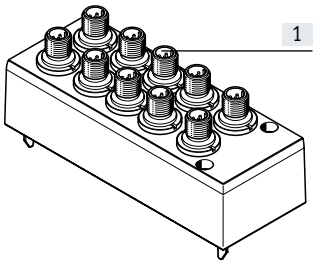

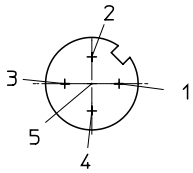

[1] 1xM12 plug, 5-pin

Pin allocation M12

With positive logic:
- Pin1 – Not allocated
- Pin2 – U_B for coil 12
- Pin3 – 0 V for coil 12 and 14
- Pin4 – U_B for coil 14
- Pin5 – Functional earth

Pin allocation M12

With negative logic:
- Pin1 – Not allocated
- Pin2 – 0 V for coil 12
- Pin3 – U_B for coil 12 and 14
- Pin4 – 0 V for coil 14
- Pin5 – Functional earth

Note

- Mixed operation of positive-switching (PNP) and negative-switching (NPN) control signals is not permissible because all control signals of the solenoid coils of a valve terminal share a common load.
- All M12 connections (MP2/MP3) within a valve terminal share a common load.

Instructions for use

Operating materials

Operate your system with unlubricated compressed air, if possible. Festo valves and cylinders are designed so that, if used as intended, they will not require additional lubrication and will still achieve a long service life.
The quality of compressed air downstream of the compressor must correspond to that of unlubricated compressed air. If possible, do not operate the entire system with lubricated compressed air. The lubricators should, where possible, always be installed directly upstream of the actuator requiring them.

Incorrect additional oil and too high an oil content in the compressed air reduce the service life of the valve terminal.
Use Festo special oil OFSW-32 or the alternatives listed in the Festo catalogue (as specified in DIN 51524 HLP32; basic oil viscosity 32 CST at 40°C).

Bio-oils
When using bio-oils (oils which are based on synthetic or native esters, e.g. rapeseed oil methyl ester), the maximum residual oil content of 0.1 mg/m^3 must not be exceeded (see ISO 8573-1:2010 Class 2).

Mineral oils
When using mineral oils (e.g. HLP oils to DIN 51524, parts 1 to 3) or similar oils based on poly-alpha-olefins (PAO), the maximum residual oil content of 5 mg/m^3 must not be exceeded (see ISO 8573-1:2010 Class 4).
A higher residual oil content is not permitted, regardless of the compressor oil, because permanent lubrication would otherwise be flushed out over a period of time.

Datasheet – Valve terminal

Valve width
to ISO 15407-2
- 18 mm
- 26 mm

to ISO 5599-2
- 42 mm (ISO 1)
- 52 mm (ISO 2)

Voltage
24 V DC

Flow rate[1)]
Width 18 mm:
up to 550 (700) l/min
Width 26 mm: up to
1100 (1350) l/min
Width 42 mm: up to
1300 (1860) l/min
Width 52 mm
up to 2900 l/min

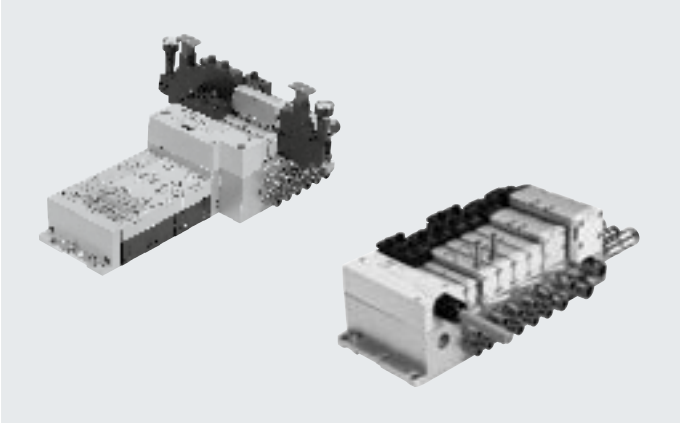

1) Flow rates in brackets apply to VTSA-F

General technical data for VTSA/VTSA-F		
Terminal type VTSA/VTSA-F		VTSA is the standard version, VTSA-F is the version with optimised flow rate
Valve sizes		Widths 18 mm, 26 mm, 42 mm, 52 mm, extendable with adapter to 65 mm
Actuation type		Electrical
Electrical actuation		With multi-pin plug: multi-pin, IO-Link
		With fieldbus: integrated controller, fieldbus, Industrial Ethernet
Pilot air supply		Internal/external
Exhaust function, can be throttled		Via throttle plate
Type of mounting		Wall mounting
		On H-rail to EN 60715
Mounting position		Any
Signal status display		LED
Manual override		Detenting, non-detenting, concealed
Suitable for vacuum		Yes
Valve terminal design		Modular, valve sizes can be mixed
Max. no. of valve positions		32 [1)]
Pneumatic connections – Threaded connection		
Pneumatic connection		Via manifold sub-base
Supply port	1	Dependent on the end plate or supply plate used (and adapter plate when using ISO size 3 valves)
Exhaust port	3/5	Dependent on the end plate or supply plate used (and adapter plate when using ISO size 3 valves)
Working ports	2/4	Dependent on the connection type selected
External pilot air supply port	14	Dependent on the end plate used (and adapter plate when using ISO size 3 valves)
Pilot exhaust air port	12	Dependent on the end plate used (and adapter plate when using ISO size 3 valves)

1) Dependent on the electrical interface and the manifold sub-bases used

Note: this product conforms to ISO 1179-1 and ISO 228-1.

Datasheet – Valve terminal VTSA-F-CB

Valve width
- 18 mm (ISO 02)
- 26 mm (ISO 01)
- 42 mm (ISO 1)

to ISO 5599-2
- 52 mm (ISO 2)

Voltage
24 V DC

Flow rate[1)]
Width 18 mm:
up to 700 l/min
Width 26 mm:
up to 1350 l/min
Width 42 mm:
up to 1860 l/min
Width 52 mm
up to 2900 l/min

1) Flow rates apply to 5/2-way solenoid valve

General technical data for VTSA-F-CB					
Terminal type CPX/VTSA-F-CB		Type 46			
Design		Piston spool valve			
Valve functions		• 5/2-way solenoid valve • 5/3-way solenoid valve[1)] • 2x 3/2-way solenoid valve • 2x 2/2-way solenoid valve Integration of vacuum generation, soft-start/quick exhaust valve, switchable pilot air			
Valve sizes, width	[mm]	18	26	42	52
Grid dimension	[mm]	38	54	43	59
Number of valves/plates		2	2	1	1
To standard		–	–	–	Standardised
Actuation type		Electrical			
Electrical actuation		Fieldbus: CPX			
Pilot air supply		Internal/external			
Exhaust function, can be throttled		Via throttle plate			
Type of mounting		Wall mounting			
		On H-rail to EN 60715 (not possible in combination with CPX-FVDA-P2 (safety module))			
Mounting position		Any			
Signal status display		LED			
Manual override		Non-detenting/detenting; non-detenting/concealed; non-detenting-heavy duty/detenting with accessories; self-resetting via electrical control signal			
Suitable for vacuum		Yes			
Valve terminal design		Modular, valve sizes can be mixed			
Note on forced checking procedure		Switching frequency min. 1/month			
Max. no. of valve positions		Max. 24 per voltage zone: max. 4 x 24 = 96			
Number of voltage zones		≤ 6			
Pneumatic connection		Via manifold sub-base			
Supply port	1	Via right end plate (G1/2 and G3/4) or supply plate or soft-start valve			
Exhaust port	3/5	Via right end plate (G1/2 and G3/4) or supply plate or soft-start valve			
Working ports	2/4	G1/8	G1/4	G3/8	G1/2
Tubing size: small	[mm]	6	8	10	12
Tubing size: large	[mm]	8	10	12	16
Fittings		QS fittings, tubing dimensions metric or imperial (hybrid)			

1) If neither solenoid coil is energised, the valve is moved to its mid-position by spring force. If both solenoid coils are energised at the same time, the valve remains in the previously assumed switching position

Datasheet – Valve terminal

Standard nominal flow rate of valve/valve terminal [l/min]									
Valve function (with valve code)	Terminal code	Width 18 mm				Width 26 mm			
		Valve	Valve on valve terminal			Valve	Valve on valve terminal		
			VTSA	VTSA-F	VTSA-F-CB		VTSA	VTSA-F	VTSA-F-CB
5/2-way, double solenoid (B52)	J	750	550	700	700	1400	1100	1350	1350
5/2-way, double solenoid with dominant signal (D52)	D	750	550	700	700	1400	1100	1350	1350
5/2-way, single solenoid, pneumatic spring (M52-A)	M	750	550	700	700	1400	1100	1350	1350
5/2-way, single solenoid, mechanical spring (M52-M)	O	750	550	700	700	1400	1100	1350	1350
5/3-way, closed (P53C)	G	700	450	650	650	1400[1)] 700[2)]	1000[1)] 700[2)]	1350[1)] 700[2)]	1350[1)] 700[2)]
5/3-way, exhausted (P53E)	E	700[1)] 330[2)]	450[1)] 330[2)]	480[1)] 330[2)]	480[1)] 330[2)]	1400[1)] 700[2)]	1000[1)] 700[2)]	1350[1)] 700[2)]	1350[1)] 700[2)]
5/3-way, pressurised (P53U)	B	700[1)] 330[2)]	450[1)] 330[2)]	480[1)] 330[2)]	480[1)] 330[2)]	1400[1)] 700[2)]	1000[1)] 700[2)]	1350[1)] 700[2)]	1350[1)] 700[2)]
5/3-way, exhausted, switching position 14 detenting (P53ED)[3)]	SA	–	380[1)] 310[2)]	430[1)] 360[2)]	430[1)] 360[2)]	1400[1)] 700[2)]	1000[1)] 700[2)]	1350[1)] 700[2)]	1350[1)] 700[2)]
5/3-way, exhausted, switching position 12 detenting (P53EP)[3)]	SE	–	380[1)] 300[2)]	460[1)] 350[2)]	460[1)] 350[2)]	1400[1)] 700[2)]	1000[1)] 700[2)]	1350[1)] 700[2)]	1350[1)] 700[2)]
5/3-way, port 2 pressurised, 4 exhausted, switching position 14 detenting (P53AD)[3)]	SB	–	380[1)] 350[2)]	440[1)] 400[2)]	440[1)] 400[2)]	700[1)] 700[2)]	700[1)] 700[2)]	700[1)] 700[2)]	700[1)] 700[2)]
5/3-way, port 4 pressurised, 2 exhausted, switching position 14 detenting (P53BD)[3)]	SD	–	370[1)] 340[2)]	430[1)] 360[2)]	430[1)] 360[2)]	–	850[1)] 820[2)]	950[1)] 860[2)]	950[1)] 860[2)]
2x3/2-way, single solenoid, closed (T32C)	K	600	400	550	550	1250	900	1150	1150
2x3/2-way, single solenoid, open (T32U)	N	600	400	550	550	1250	900	1150	1150
2x3/2-way, single solenoid, open/closed (T32H)	H	600	400	550	550	1250	900	1150	1150
2x3/2-way, single solenoid, closed (T32N)	Q	600	400	550	550	1250	900	1150	1150
2x3/2-way, single solenoid, open (T32F)	P	600	400	550	550	1250	900	1150	1150
2x3/2-way, single solenoid, open/closed (T32W)	R	600	400	550	550	1250	900	1150	1150
2x2/2-way, single solenoid, closed (T22C)	VC	700	500	650	650	1350	1000	1300	1300
2x2/2-way, single solenoid, closed (T22CV)	VV	700	500	650	650	1350	1000	1300	1300

1) Switching position
2) Mid-position
3) The valve functions P53ED, P53EP, P53AD and P53BD are only available in the 24 V DC version. Values only apply to 24 V DC.

Datasheet – Valve terminal

Standard nominal flow rate of valve/valve terminal [l/min]									
Valve function (with valve code)	Terminal code	Width 42 mm				Width 52 mm			
		Valve	Valve on valve terminal			Valve	Valve on valve terminal		
			VTSA	VTSA-F	VTSA-F-CB		VTSA	VTSA-F	VTSA-F-CB
5/2-way, double solenoid (B52)	J	2000	1300	1860	1860	4000	2900	2900	2900
5/2-way, double solenoid with dominant signal (D52)	D	2000	1300	1860	1860	4000	2900	2900	2900
5/2-way, single solenoid, pneumatic spring (M52-A)	M	2000	1300	1860	1860	4000	2900	2900	2900
5/2-way, single solenoid, mechanical spring (M52-M)	O	2000	1300	1860	1860	4000	2900	2900	2900
5/3-way, closed (P53C)	G	1900[1)] 950[2)]	1200[1)] 800[2)]	1690[1)] 830[2)]	1690[1)] 830[2)]	3600[1)] 1700[2)]	2800[1)] 1700[2)]	2800[1)] 1700[2)]	2800[1)] 1700[2)]
5/3-way, exhausted (P53E)	E	1900[1)] 950[2)]	1200[1)] 800[2)]	1690[1)] 830[2)]	1690[1)] 830[2)]	3600[1)] 1700[2)]	2800[1)] 1700[2)]	2800[1)] 1700[2)]	2800[1)] 1700[2)]
5/3-way, pressurised (P53U)	B	1900[1)] 950[2)]	1200[1)] 800[2)]	1690[1)] 830[2)]	1690[1)] 830[2)]	3600[1)] 1700[2)]	2800[1)] 1700[2)]	2800[1)] 1700[2)]	2800[1)] 1700[2)]
5/3-way, pressurised 1 to 2, 4 to 5 closed (P53F)[3)]	VG	1700[1)] 700[2)]	1400[1)] 800[2)]	1700[1)] 700[2)]	1700[1)] 700[2)]	3000[1)] 900[2)]	2300[1)] 900[2)]	2300[1)] 900[2)]	2300[1)] 900[2)]
2x3/2-way, single solenoid, closed (T32C)	K	1600	1200	1300	1300	3000	2400	2400	2400
2x3/2-way, single solenoid, open (T32U)	N	1600	1200	1300	1300	3000	2400	2400	2400
2x3/2-way, single solenoid, open/closed (T32H)	H	1600	1200	1300	1300	3000	2400	2400	2400
2x3/2-way, single solenoid, closed (T32N)	Q	1600	1200	1300	1300	3000	2400	2400	2400
2x3/2-way, single solenoid, open (T32F)	P	1600	1200	1300	1300	3000	2400	2400	2400
2x3/2-way, single solenoid, open/closed (T32W)	R	1600	1200	1300	1300	3000	2400	2400	2400
2x2/2-way, single solenoid, closed (T22C)	VC	1600	1400	1500	1500	4000	2800	2800	2800
2x2/2-way, single solenoid, closed (T22CV)	VV	1600	1400	1500	1500	–	–	–	–

1) Switching position
2) Mid-position
3) The valve function P53F is only available in the 24 V DC version. Values only apply to 24 V DC.

Datasheet – Valve terminal

Flow rate qn as a function of output pressure p2 with pressure regulator plates (P regulator plate) for port 1

6 bar

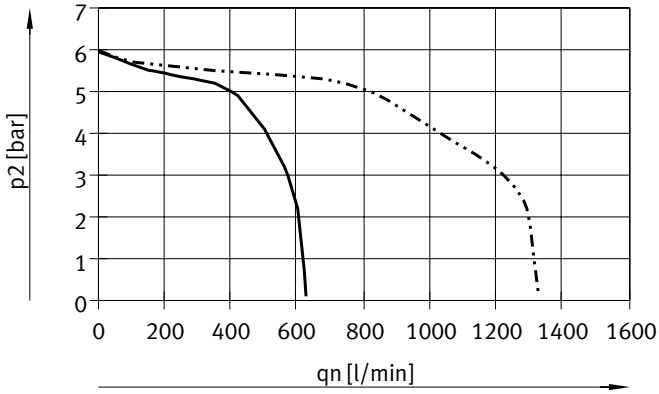

Width 18 mm
Width 26 mm

10 bar

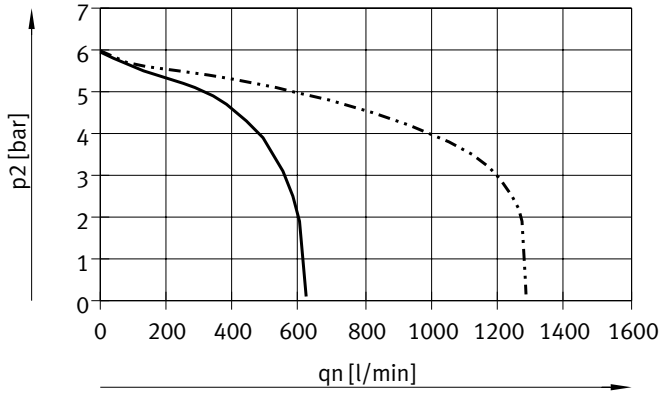

Width 18 mm
Width 26 mm

Input pressure 10 bar, set regulated pressure 6 bar

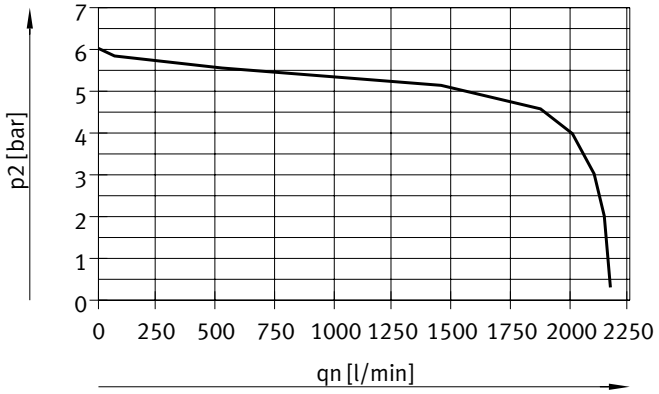

Width 42 mm (ISO 1)

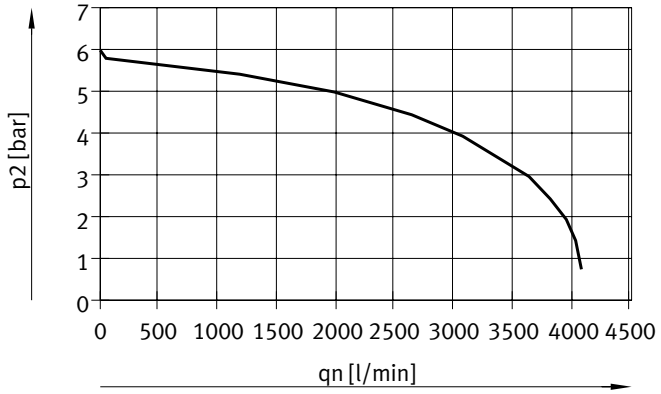

Width 52 mm (ISO 2)

Datasheet – Valve terminal

Flow rate qn as a function of output pressure p2 with pressure regulator plates (AB regulator plates) for port 2, 4 or ports 4/2

6 bar

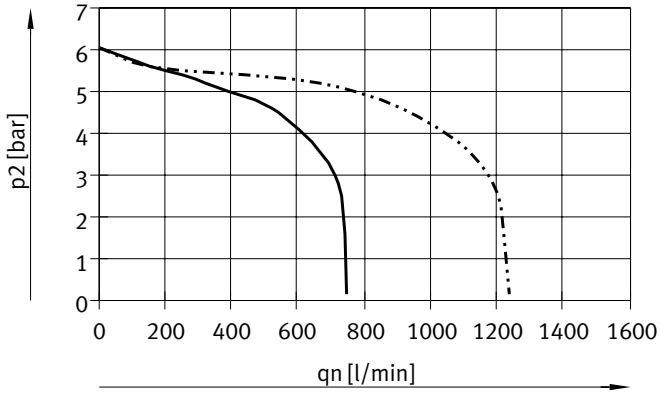

Width 18 mm
Width 26 mm

10 bar

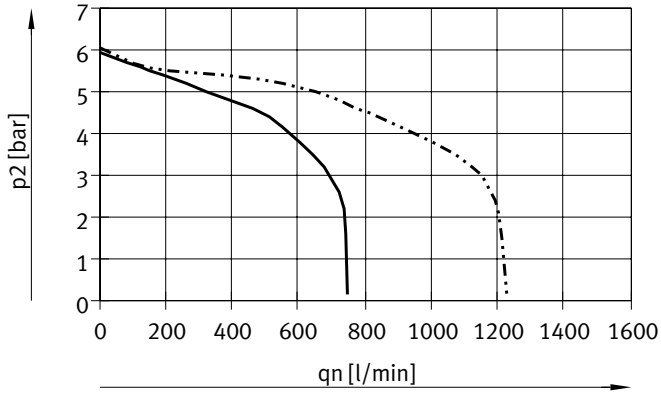

Width 18 mm
Width 26 mm

Input pressure 10 bar, set regulated pressure 6 bar

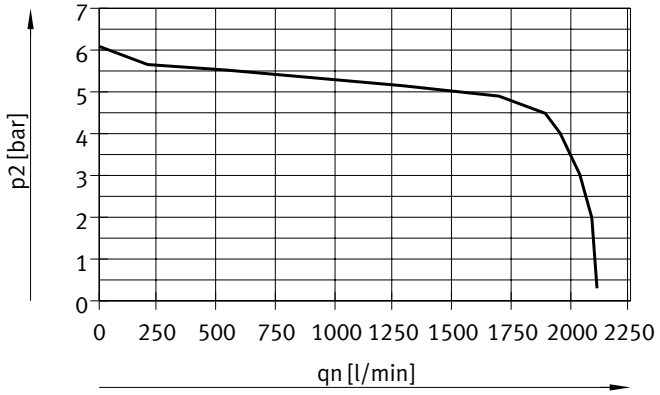

Width 42 mm (ISO 1)

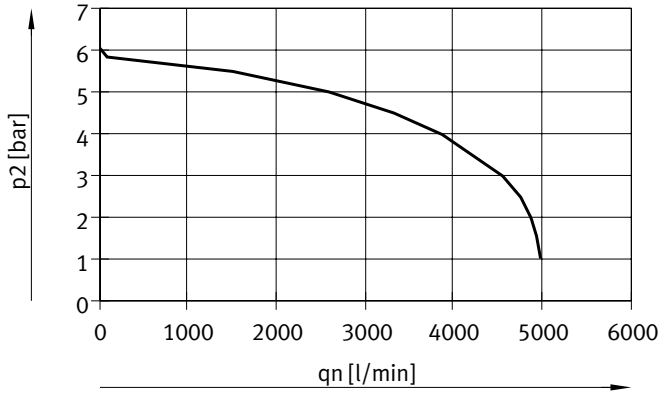

Width 52 mm (ISO 2)

Datasheet – Valve terminal

Flow rate qn as a function of output pressure p2 with pressure regulator plates (AB regulator plates, rev.) for ports 4/2, reversible

6 bar

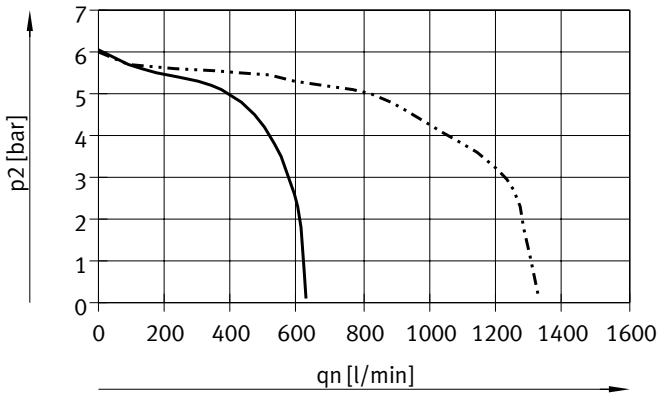

Width 18 mm
Width 26 mm

10 bar

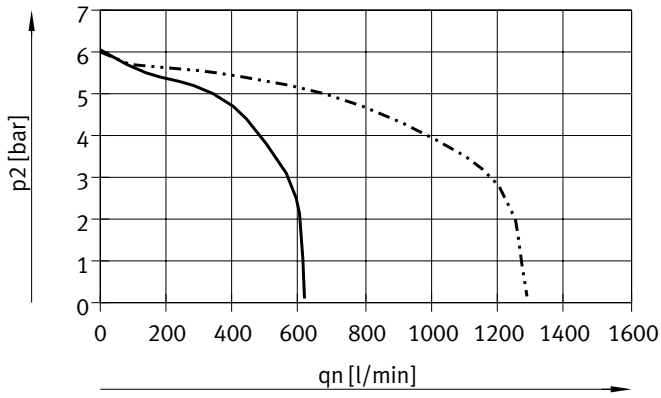

Width 18 mm
Width 26 mm

Input pressure 10 bar, set regulated pressure 6 bar

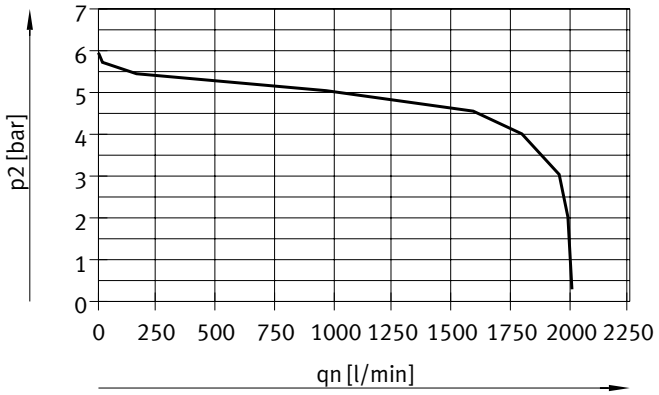

Width 42 mm (ISO 1)

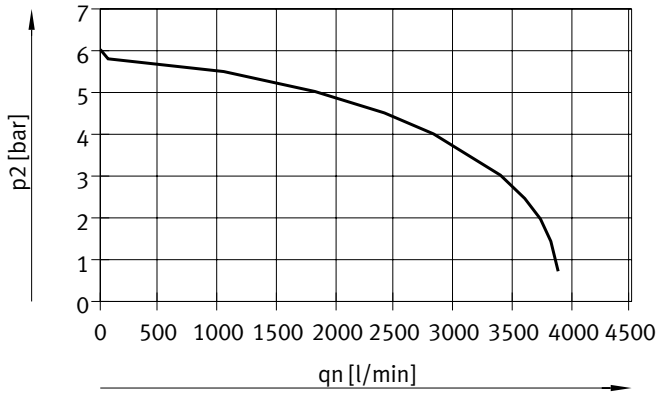

Width 52 mm (ISO 2)

Datasheet – Valve terminal

Flow rate qn as a function of flow control

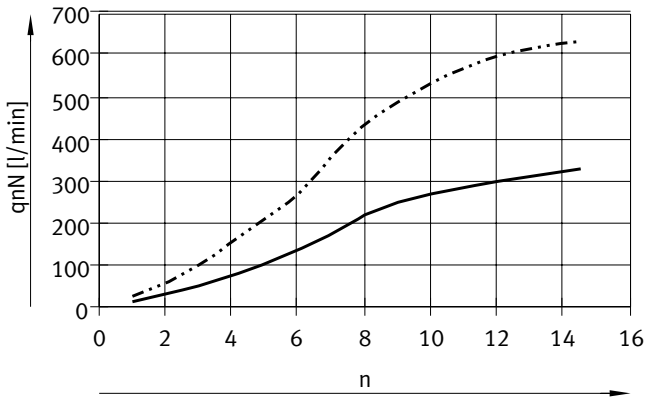

Width 18 mm
Width 26 mm

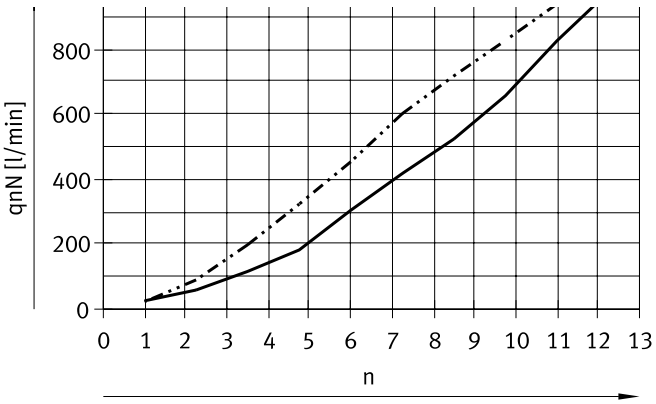

Width 42 mm (ISO 1)

Flow control screw from 2 ➔ 3
Flow control screw from 4 ➔ 5
n = revolutions of the adjusting screw

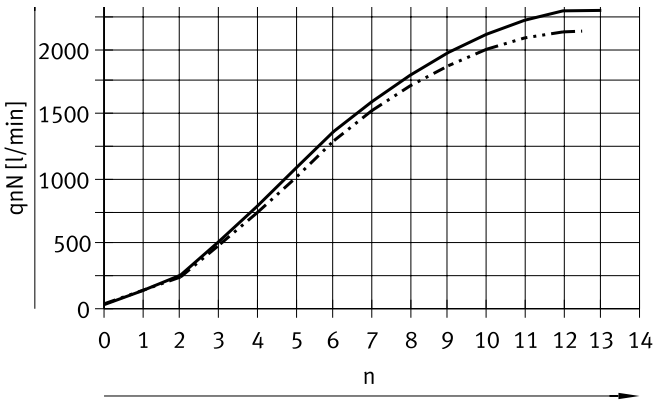

Width 52 mm (ISO 2)

Flow control screw from 2 ➔ 3
Flow control screw from 4 ➔ 5
n = revolutions of the adjusting screw

Datasheet – Valve terminal

Pilot pressure p12/14 as a function of operating pressure p1

For 3/2-way solenoid valves (T32, T22)

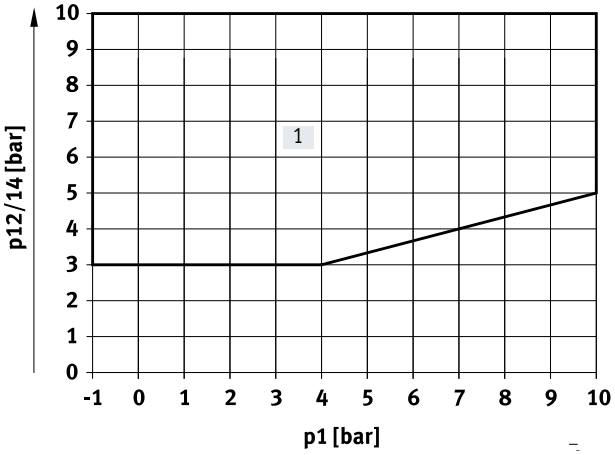

[1] Operating range for valves with external pilot air supply

For 5/2-way solenoid valves (M52, B52, D52, P53)

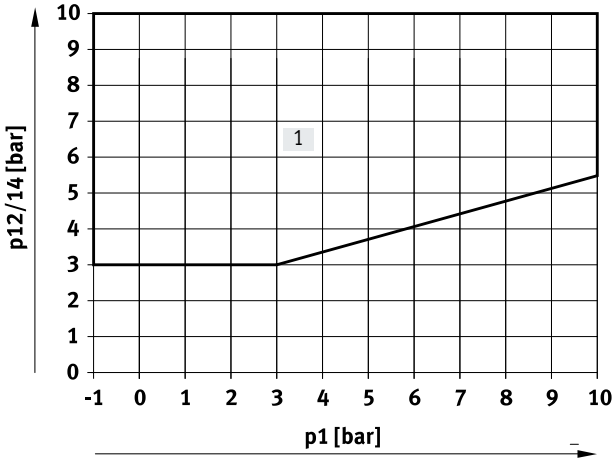

[1] Operating range for valves with external pilot air supply

Standard nominal flow rate with vertical stacking [l/min]				
Widths	18 mm	26 mm	42 mm	52 mm
Throttle plate				
VABF-S4-2-F1B1-C	See characteristic curve	–	–	–
VABF-S4-1-F1B1-C	–	See characteristic curve	–	–
VABF-S2-1-F1B1-C	–	–	1100	–
VABF-S2-2-F1B1-C	–	–	–	See characteristic curve
Vertical supply plate				
VABF-S4-2-P1A ... -G18	430	–	–	–
VABF-S4-1-P1A ... -G14	–	900	–	–
VABF-S2-1-P1A ... -G38	–	–	1300	–
VABF-S2-2-P1A ... -G12	–	–	–	2800
Vertical pressure shut-off plate				
VABF-S4-2-L1D1-C	400	–	–	–
VABF-S4-2-L1D2-C [1)]	320	–	–	–
VABF-S4-1-L1D1-C	–	800	–	–
VABF-S4-1-L1D2-C [1)]	–	620	–	–
VABF-S2-1-L1D1-C	–	–	1200	–
VABF-S2-2-L1D1-C	–	–	–	1950

1) Lockable with key

Datasheet – Valve terminal

Operating and environmental conditions			
Type		VTSA/VTSA-F	VTSA-F-CB
Operating medium		Compressed air to ISO 8573-1:2010 [7:4:4]	Compressed air to ISO 8573-1:2010 [7:4:4]
Pilot medium		Compressed air to ISO 8573-1:2010 [7:4:4]	Compressed air to ISO 8573-1:2010 [7:4:4]
Notes on operating/ pilot medium		Lubricated operation possible (in which case lubricated operation will always be required)	Lubricated operation not possible
External	[bar]	−0.9 ... +10	−0.9 ... +10
	[MPa]	−0.09 ... +1	–
Internal	[bar]	3 ... 10	3 ... 10
	[MPa]	0.3 ... 1	0.3 ... 1
Pilot pressure	[bar]	3 ... 10	3 ... 10
	[MPa]	0.3 ... 1	–
Noise level LpA	[dB(A)]	85	–
Ambient temperature	[°C]	−5 ... +50	−5 ... +50
Temperature of medium	[°C]	−5 ... +50	–
Storage temperature	[°C]	−20 ... +60	−20 ... +60
Relative humidity	[%]	0 ... 90	0 ... 90
Certification		BIA	–
		C-Tick	–
		c UL us – Recognized (OL)	–
CE marking (see declaration of conformity)		To EU Low Voltage Directive (only for VTSA-MP)	–
		To EU EMC Directive[1)]	To EU EMC Directive[1)]
		To EU Explosion Protection Directive (ATEX, EX1E[3)])	–
KC marking		KC EMC	KC EMC
ATEX category for gas		II 3G (EX1E[3)])	–
Type of (ignition) protection for gas		Ex ec IIC T3 Gc X (EX1E[3)])	–
Explosion ambient temperature	[°C]	−5 ... +50 (EX1E[3)])	–
Corrosion resistance class CRC[4)]		0	0
Corrosion resistance class CRC for IO-Link[5)]		2	–

1) For information about the area of use, see the EC declaration of conformity at: www.festo.com/catalogue/... ➔ Support/Downloads.
If the devices are subject to usage restrictions in residential, commercial or light-industrial environments, further measures for the reduction of the emitted interference may be necessary.
2) Solenoid valves with code VC (2/2-way type ... T22C), N (3/2-way type ... T32U), K (3/2-way type ... T32C), H (3/2-way type ... T32H) must not be operated with vacuum; the operating pressure here is 3 ... 10 bar
3) Certification is valid for VTSA/VTSA-F-MP, VTSA/VTSA-F-FB
4) Corrosion resistance class CRC 0 to Festo standard FN 940070
No corrosion stress. Applies to small, visually unimportant standards-based parts such as threaded pins, circlips and clamping sleeves which are usually only available on the market in a phosphated or burnished version (and possibly oiled) as well as to ball bearings (for components < CRC 3) and plain bearings.
5) Corrosion resistance class CRC 2 to Festo standard FN 940070
Moderate corrosion stress. Indoor application where condensation may occur. External visible parts with primarily decorative surface requirements that are in direct contact with the surrounding industrial environment.

Datasheet – Valve terminal

Electrical data – Individual electrical connection		
Load voltage supply for valves (U_{val})		
Operating voltage	[V DC]	24 ±10%
Max. total current at 24 V DC	[A]	10
Duty cycle		100%
Degree of protection		IP65, NEMA 4 (for all types of signal transmission when mounted)

Electrical data – Multi-pin plug connection		
Load voltage supply for valves (U_{val})		
Operating voltage	[V DC]	24 ±10%
Max. total current	[A]	6
Acceptable current load at 40°C	[A]	1
Surge resistance	[kV]	1.5
Pollution degree		3
Duty cycle		100%
Degree of protection		IP65, NEMA 4 (for all types of signal transmission when mounted)

Electrical data – With CPX terminal		
Power supply for electronics ($U_{EL/SEN}$)		
Operating voltage	[V DC]	24 ±10%
Max. intrinsic current consumption at 24 V DC	[mA]	20
Duty cycle		100%
Load voltage supply for valves (U_{val})		
Operating voltage	[V DC]	24 ±10%
Diagnostic message undervoltage U_{OFF}, load voltage outside the functional range	[V]	21.6 ... 21.5
Degree of protection		IP65, NEMA 4 (for all types of signal transmission when mounted)

Materials	
Manifold sub-base	Die-cast aluminium
Valve	Die-cast aluminium, PA
Seals	FPM, NBR, HNBR
Supply plate, supply plate cover	Die-cast aluminium
Right end plate	Die-cast aluminium
Pneumatic interface for CPX	Die-cast aluminium
Throttle plate	Die-cast aluminium
Pressure regulator plate	Die-cast aluminium, PA
Multi-pin manifold block	Die-cast aluminium
Cover for the pneumatic interface and multi-pin plug connection	PA
Note on materials	RoHS-compliant
LABS (PWIS) conformity (only for IO-Link)	VDMA24364-B2-L

Datasheet – Valve terminal

Product weight				
	Width			
Approx. weights [g]	18 mm	26 mm	42 mm	52 mm
Multi-pin node with Sub-D or terminal strip for VTSA/VTSA-F [1]	550			
Multi-pin node with M12 individual connection for VTSA/VTSA-F	760			
Pneumatic interface CPX for VTSA/VTSA-F • With diagnostics for undervoltage of valves (VABA-S6-1-X1/X2/X2-D)	590			
Pneumatic interface CPX for VTSA-F-CB • With 3x load supplies (VABA-S6-1-X1/X2-3V-CB)	580			
• For PROFIsafe, with diagnostics for undervoltage, short circuit of valves, wire break per solenoid coil (VABA-S6-1-X2-F1/F2-CB)	734			
• With diagnostics for undervoltage, short circuit of valves, wire break per solenoid coil (VABA-S6-1-X1/X2-CB)	560			
IO-Link interface	690			
Electrical interface for AS-Interface for VTSA/VTSA-F	300			
AS-Interface module for VTSA/VTSA-F	850			
Supply plate for valve terminal VTSA/VTSA-F [2] • Exhaust plate with 3 and 5 common	617			
• Exhaust air cover with 3 and 5 separate	597			
Supply plate/extension module for VTSA-F-CB [2] • Exhaust plate with 3 and 5 common	611			
• Exhaust air cover with 3 and 5 separate	600			
Right end plate [3] • With threaded connections	339			336
• Selector switch	281			–
Manifold sub-base for VTSA/VTSA-F [4]	447	634	340, 330 [5]	610
Manifold sub-base for VTSA-F-CB [4]	434	579	330	610
90°-connection plate [3]	170	230	176	359
Pressure regulator plate • For port 1 (P)	350	402	640	1190
• For port 4 or 2 (A or B)	367	448	640	1230
• For ports 4 and 2 (A/B)	611	692	920	1990
Throttle plate	228	320	220	565
Vertical supply plate [3]	140	191	340	605
Vertical pressure shut-off plate	209	273	600	1030
Vertical pressure shut-off plate (lockable with key)	231	290	–	–
Valves → Solenoid valves, widths				
Cover plate	34	73	68	146

1) With sheet metal seal, printed circuit board
2) With sheet metal seal and electrical link
3) With screws
4) With sheet metal seal, electrical link, inscription label holder, 4 screws
5) Manifold sub-base optimised for flow rate, HS

Datasheet – Valve terminal

Dimensions Download CAD data ➔ www.festo.com

Valve terminal with individual electrical connection

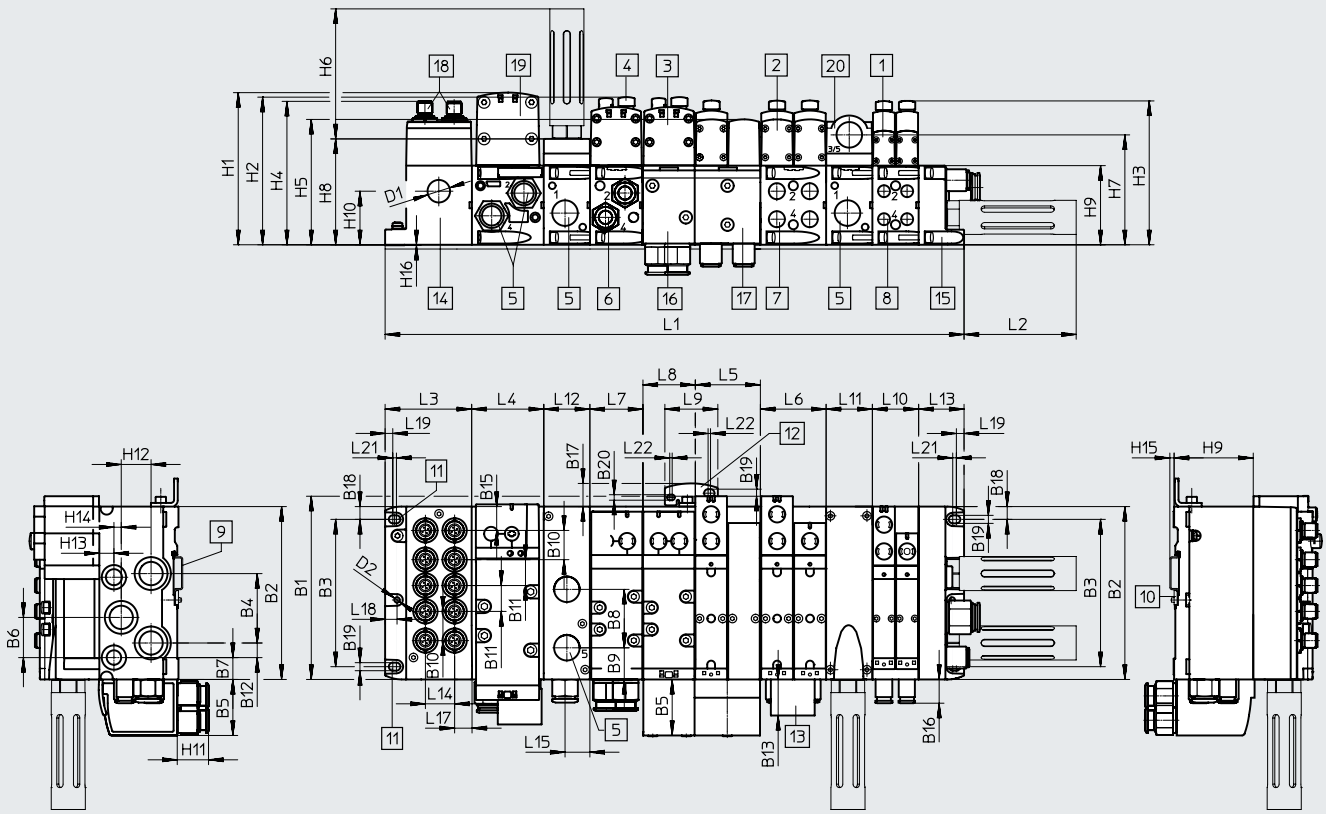

[1] Solenoid valve width 18 mm
[2] Solenoid valve width 26 mm
[3] Solenoid valve width 42 mm
[4] Cover cap/manual override
[5] Threaded connection G1/2
[6] Threaded connection G3/8
[7] Threaded connection G1/4
[8] Threaded connection G1/8
[9] H-rail
[10] H-rail mounting
[11] Mounting hole
[12] Additional mounting bracket
[13] Inscription label holder
[14] Individual connection
[15] End plate
[16] 90°-connection plate 43 mm, G3/8
[17] 90°-connection plate 54 mm, G1/4
[18] M12 plug 5-pin (6-way or 10-way)
[19] Solenoid valve width 52 mm
[20] Supply plate

n02 Number of manifold sub-bases 38 mm
n01 Number of manifold sub-bases 54 mm
n1 Number of manifold sub-bases 43 mm
n2 Number of manifold sub-bases 59 mm
n Number of supply plates (only with end plate with pilot air selector)

Dim.	B1	B2	B3	B4	B5	B6	B7	B8	B9	B10	B11	B12	B13	B14	B15	B16	B17	B18	B19	B20
[mm]	150.5	142	121	57	46	33	18	48	26	24	21.3	12	29.6	23	19.6	19.5	19	10.5	6.6	4.5

Dim.	L2	L3	L4	L5	L6	L7	L8	L9	L10	L11	L12	L13	L14	L15	L16	L17	L18	L19
[mm]	92.4	71.3	n2x59	n01x54	54	n1x43	43	43.5	n02x38	nx38	38	37.3	24	20.5	20	14.1	9.8	6.3

Dim.	L20	L21	L22	D1Ø	D2Ø	H1	H2	H3	H4	H5	H6	H7	H8	H9	H10	H11	H12	H13	H14	H15	H16
[mm]	5.5	3	2	18.5	4.5	125	121.3	118.2	118	103	107.8	90.3	87	65	44	25.7	24.5	12	6	3.5	0.5

Width	L1
18 mm	71.3 + n02 x 38 + n x 38 + 37.3
26 mm	71.3 + n01 x 54 + n x 38 + 37.3
42 mm	71.3 + n1 x 43 + n x 38 + 37.3
52 mm	71.3 + n2 x 59 + n x 38 + 37.3
Mixture of 18 mm, 26 mm, 42 mm and 52 mm	71.3 + n02 x 38 + n01 x 54 + n1 x 43 + n2x59 + n x 38 + 37.3

Note: this product conforms to ISO 1179-1 and ISO 228-1.

Datasheet – Valve terminal

Dimensions Download CAD data ➔ www.festo.com

Valve terminal with multi-pin plug connection

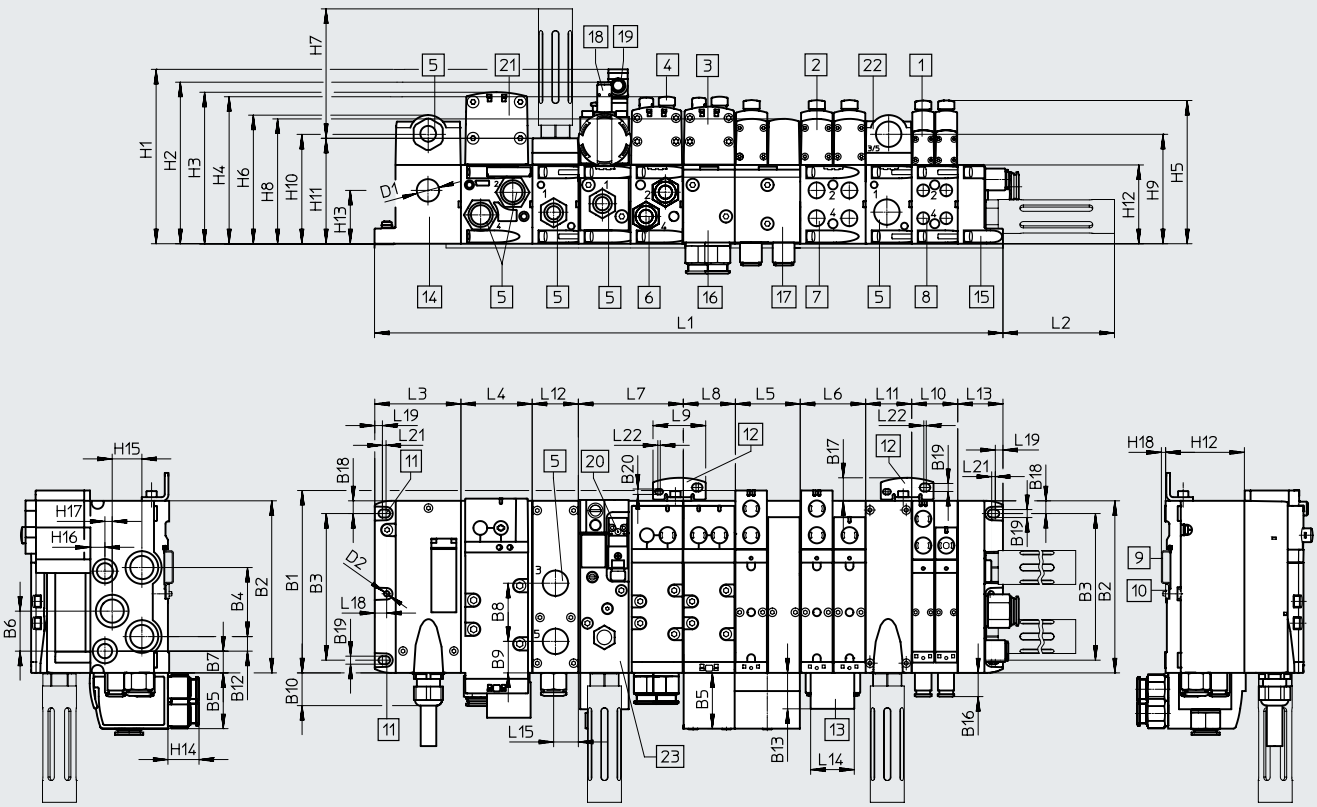

[1]	Solenoid valve Width 18 mm	[9]	H-rail	[17]	90°-connection plate 54 mm, G1/4
[2]	Solenoid valve Width 26 mm	[10]	H-rail mounting	[18]	Proximity switch M12x1
[3]	Solenoid valve Width 42 mm	[11]	Mounting hole	[19]	Plug socket M12x1
[4]	Cover cap/manual override	[12]	Additional mounting bracket	[20]	Electrical connection to EN 175301-803, type C
[5]	Threaded connection G1/2	[13]	Inscription label holder	[21]	Solenoid valve width 52 mm
[6]	Threaded connection G3/8	[14]	Multi-pin plug connection	[22]	Supply plate
[7]	Threaded connection G1/4	[15]	End plate	[23]	Soft-start valve
[8]	Threaded connection G1/8	[16]	90°-connection plate 43 mm, G3/8		

N02	Number of manifold sub-bases 38 mm
N01	Number of manifold sub-bases 54 mm
N1	Number of manifold sub-bases 43 mm
N2	Number of manifold sub-bases 59 mm
n	Number of supply plates (only with end plate with pilot air selector)

Dim.	B1	B2	B3	B4	B5	B6	B7	B8	B9	B10	B11	B12	B13	B14	B16	B17	B18	B19	B20
[mm]	150.5	142	121	57	46	33	18	48	26	27	2	12	29.6	23	19.5	19	10.5	6.6	4.5

Dim.	L2	L3	L4	L5	L6	L7	L8	L9	L10	L11	L12	L13	L14	L15	L16	L18	L19	L20	L21
[mm]	92.4	71.3	n2x59	n01x54	54	n1x43	43	43.5	n02x38	nx38	38	37.3	36	20.5	20	9.8	6.3	5.5	3

Dim.	L22	D1Ø	D2Ø	H1	H2	H3	H4	H5	H6	H7	H8	H9	H10	H11	H12	H13	H14	H15	H16	H17	H18
[mm]	2	18.5	4.5	143.9	133.3	125	121.3	118.2	106.3	107.8	103	90.3	90.3	87	65	44	25.7	24.5	12	6	3.5

Width	L1
18 mm	71.3 + n02 x 38 + n x 38 + 37.3
26 mm	71.3 + n01 x 54 + n x 38 + 37.3
42 mm	71.3 + n1 x 43 + n x 38 + 37.3
52 mm	71.3 + n2 x 59 + n x 38 + 37.3
Mixture of 18 mm, 26 mm, 42 mm and 52 mm	71.3 + n02 x 38 + n01 x 54 + n1 x 43 + n2 x 59 +n x 38+ 37.3

Note: this product conforms to ISO 1179-1 and ISO 228-1.

Datasheet – Valve terminal

Dimensions

Download CAD data ➔ www.festo.com

Multi-pin, terminal strip (Cage Clamp), VABE-S6-1LF-C-M1-C...

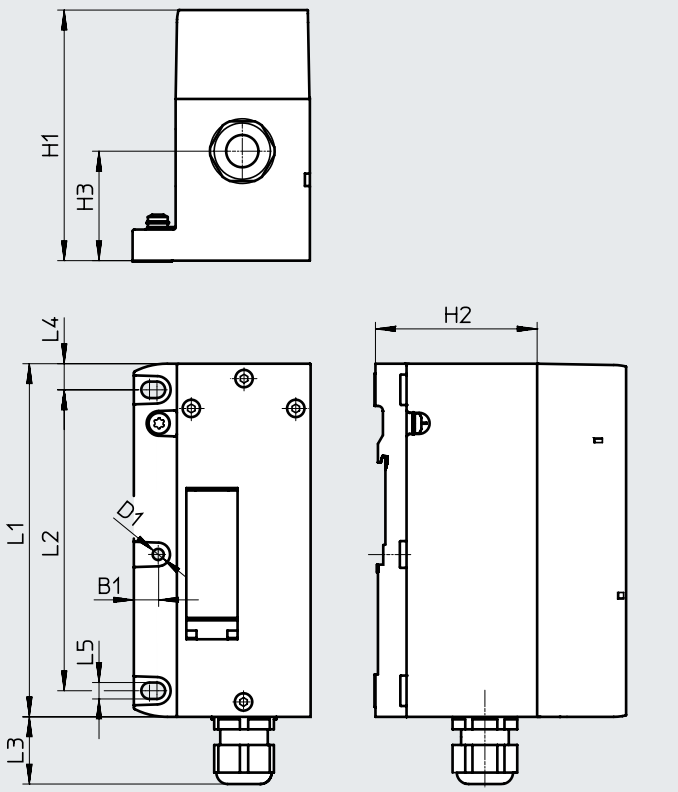

Multi-pin, round plug, VABE-S6-1LF-C-M1-R...

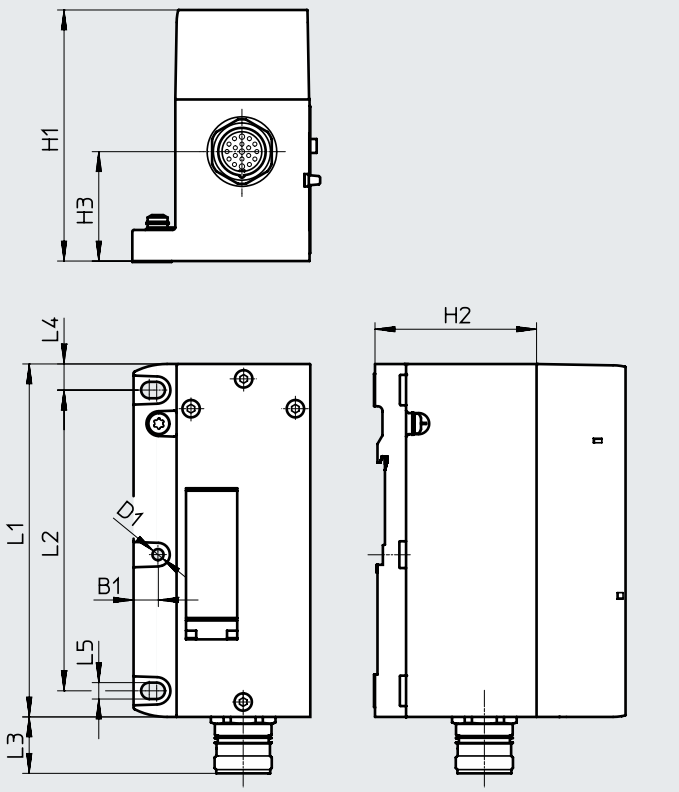

Type	H1	H2	H3	D1Ø	L1	L2	L3	L4	L5	B1
VABE-S6-1LF-C-M1-C...	106.1	65	44	4.5	142	121	27	10.5	6.6	9.8
VABE-S6-1LF-C-M1-R...	101	65	44	4.5	142	121	25	10.5	6.6	9.8

Datasheet – Valve terminal

Dimensions Download CAD data ➔ www.festo.com

Valve terminal with AS-Interface connection

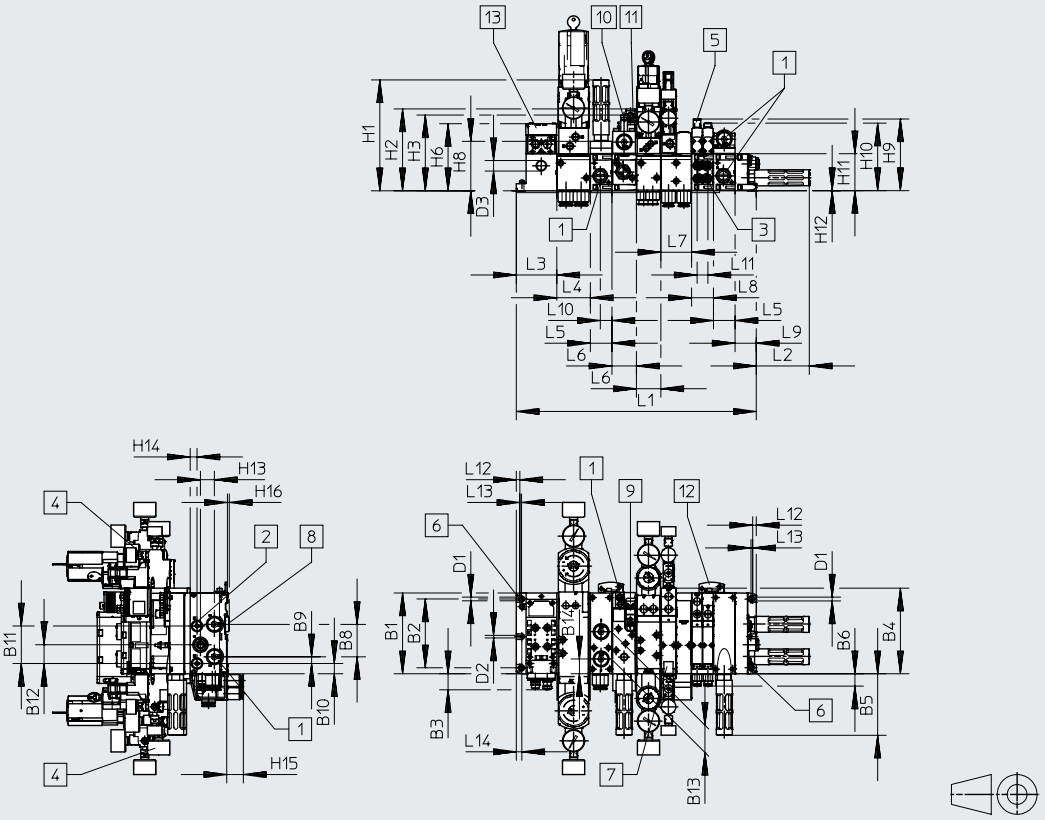

[1] Threaded connection G1/2
[2] Threaded connection G1/4
[3] Threaded connection G1/8
[4] Pressure gauge, freely positionable
[5] Manual override
[6] Mounting holes
[7] Inscription label
[8] H-rail mounting
[9] Electrical connection to DIN EN 175301-803 type C
[10] Proximity switch M12x1
[11] Plug socket M12
[12] Additional mounting bracket
[13] Electrical interface for AS-Interface

n02 Number of manifold sub-bases ISO 02
n01 Number of manifold sub-bases ISO 01
n1 Number of manifold sub-bases ISO 1
n2 Number of manifold sub-bases ISO 2
nZWP Number of supply plates
nDA Number of soft-start valves

Dim.	B1	B2	B3	B4	B5	B6	B8	B9	B10	B11	B12	B13	B14	D1	D2	D3
[mm]	142	121	28	150.5	108.1	21.6	57	12	18	66	33	48	26	6.6	4.5	18.5

Dim.	H1	H2	H3	H6	H8	H9	H10	H11	H12	H13	H14	H15	H16
[mm]	195.2	144	133.4	118	87	126	118.8	65	0.4	24.4	12	29.3	3.5

Dim.	L1	L2	L3	L4	L5	L6	L7	L8	L9	L10	L11	L12	L13	L14
[mm]	578.3	93.2	71.3	59	38	43	54	38.6	37.3	20.5	19	6.3	3	9.8

ISO size	Sub-bases width	Total length
02 + ZWP	38	108.6 + n02 * 38 + nZWP * 38 + nDA * 43
01	54	108.6 + n01 * 54 + nZWP * 38 + nDA * 43
1 + DA	43	108.6 + n1 * 43 + nZWP * 38 + nDA * 43
2	59	108.6 + n2 * 59 + nZWP * 38 + nDA * 43
Mixture of 02 + 01 + 1 + 2	38 + 54 + 43 + 59	108.6 + n02 * 38 + n01 * 54 + n1 * 43 + nZWP * 38 + n2 * 59 + nDA * 43

Datasheet – Valve terminal

Dimensions Download CAD data ➔ www.festo.com

Valve terminal with fieldbus interface

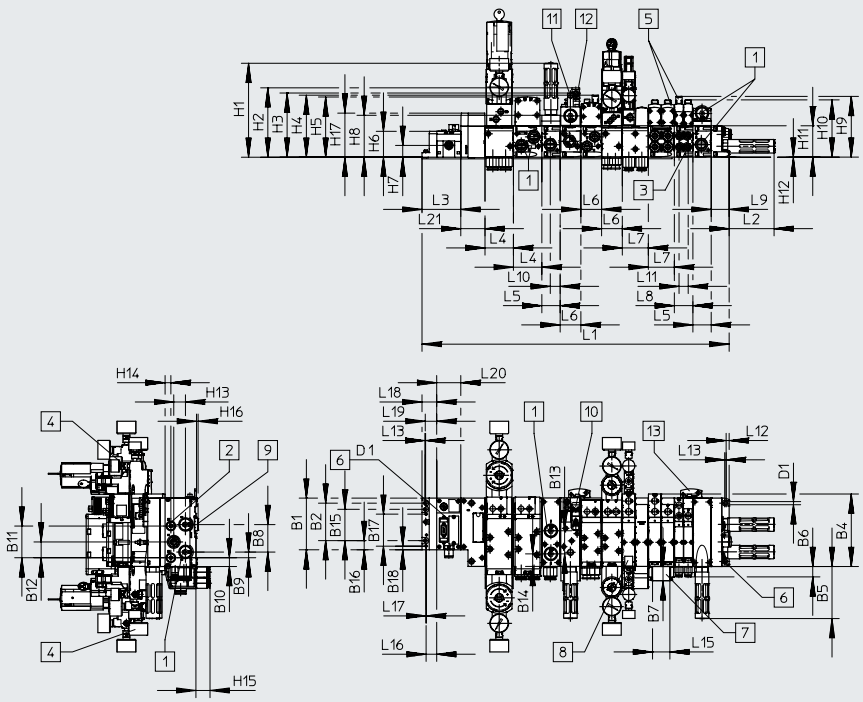

[1] Threaded connection G1/2
[2] Threaded connection G1/4
[3] Threaded connection G1/8
[4] Pressure gauge, freely positionable
[5] Manual override
[6] Mounting holes
[7] Inscription label
[8] Inscription label
[9] H-rail mounting
[10] Electrical connection to DIN EN 175301-803 type C
[11] Proximity switch M12x1
[12] Plug socket M12
[13] Additional mounting bracket

n02 Number of manifold sub-bases ISO 02
n01 Number of manifold sub-bases ISO 01
n1 Number of manifold sub-bases ISO 1
n2 Number of manifold sub-bases ISO 2
n Number of supply plates (only with end plate with pilot air selector)
nDA Number of soft-start valves
m Number of CPX modules

Dim.	B1	B2	B4	B5	B6	B7	B8	B9	B10	B11	B12	B13	B14	B15	B16	B17	B18	D1	D3
[mm]	107.3	78	150.5	108.1	21.6	29.4	57	12	18	66	33	48	26	65	18.9	66.3	7.5	6.6	4.5

Dim.	L1	L2	L3	L4	L5	L6	L7	L8	L9	L10	L11	L13	L15	L17	L18	L19	L20	L21
[mm]	587.5	93.2	80.5	59	38	43	54	38.6	37.3	20.5	19	3	36	1	30.4	23.7	mx50	50

Dim.	H1	H2	H3	H4	H5	H6	H7	H8	H9	H10	H11	H12	H13	H14	H15	H16	H17
[mm]	195.2	144	133.4	128.7	125	55.1	25.8	87	126	118.8	65	0.4	24.4	12	29.3	3.5	91.6

ISO size	Sub-bases width	L1
02 + ZWP	38	117.7 + n02 * 38 + nZWP * 38 + nDA * 43
01	54	117.7 + n01 * 54 + nZWP * 38 + nDA * 43
1 + DA	43	117.7 + n1 * 43 + nZWP * 38 + nDA * 43
2	59	117.7 + n2 * 59 + nZWP * 38 + nDA * 43
Mixture of 02 + 01 + 1 + 2	38 + 54 + 43 + 59	117.7 + n02 * 38 + n01 * 54 + n1 * 43 + nZWP * 38 + n2 * 59 + nDA * 43

Note: this product conforms to ISO 1179-1 and ISO 228-1.

Datasheet – Valve terminal

Dimensions Download CAD data ➔ www.festo.com

Valve terminal VTSA-F-CB with fieldbus interface

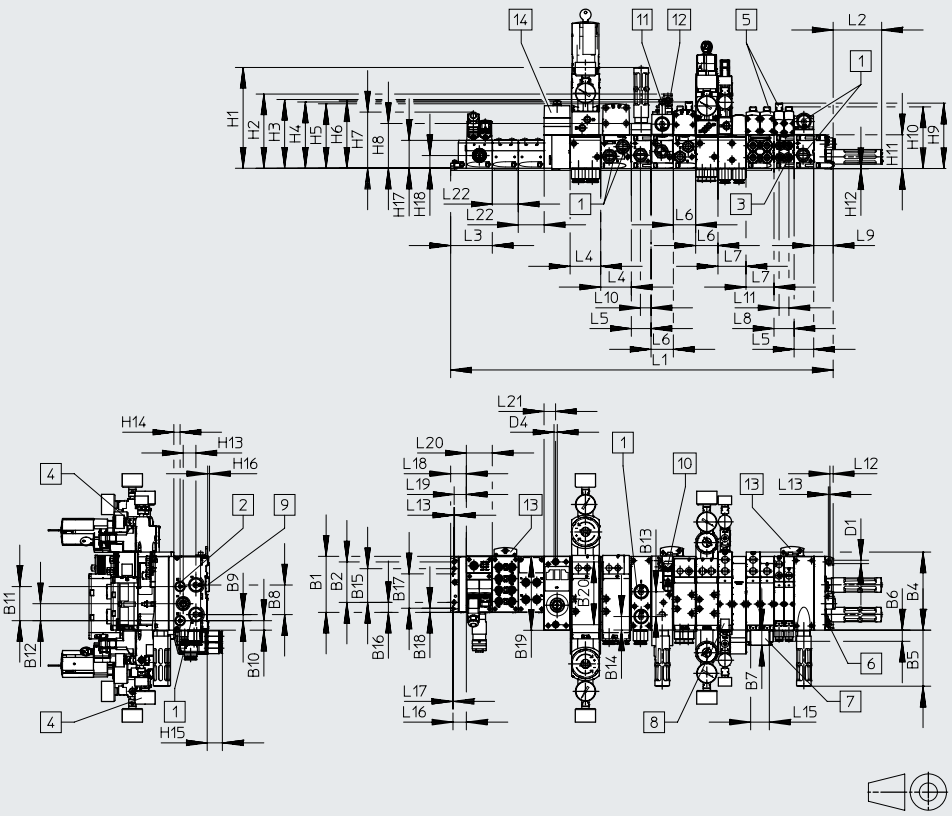

[1] Threaded connection G1/2
[2] Threaded connection G1/4
[3] Threaded connection G1/8
[4] Pressure gauge, freely positionable
[5] Manual override
[6] Mounting holes
[7] Inscription label
[8] Inscription label
[9] H-rail mounting
[10] Electrical connection to DIN EN 175301-803 type C
[11] Proximity switch M12x1
[12] Plug socket M12
[13] Additional mounting bracket
[14] Pneumatic interface CPX

n02 Number of manifold sub-bases ISO 02
n01 Number of manifold sub-bases ISO 01
n1 Number of manifold sub-bases ISO 1
n2 Number of manifold sub-bases ISO 2
nZWP Number of supply plates
nDA Number of soft-start valves
m Number of CPX modules

Dim.	B1	B2	B4	B5	B6	B7	B8	B9	B10	B11	B12	B13	B14	B15	B16	B17	B18	B19	B20
[mm]	108.1	78	150.5	108.1	21.6	29.4	57	12	18	66	33	48	26	65	19.3	66.3	7.9	142.6	121

Dim.	D4	H1	H2	H3	H4	H5	H6	H7	H8	H9	H10	H11	H12	H13	H14	H15	H16	H17	H18
[mm]	6.6	195.2	103.3	133.4	128.7	125	106.5	108.3	87	126	118.8	65	0.4	24.4	12	29.3	3.5	53.8	24.5

Dim.	L1	L2	L3	L4	L5	L6	L7	L8	L9	L10	L11	L13	L15	L16	L17	L18	L19	L20	L21	L22
[mm]	557	93.2	80.3	59	38	43	54	38.6	37.3	20.5	19	1.5	36	25.9	1	30.4	23.7	mx50.1	22.3	50.1

ISO size	Sub-bases width	Total length
02 + ZWP	38	117.7 + n02 * 38 + nZWP * 38 + nDA * 43
01	54	117.7 + n01 * 54 + nZWP * 38 + nDA * 43
1 + DA	43	117.7 + n1 * 43 + nZWP * 38 + nDA * 43
2	59	117.7 + n2 * 59 + nZWP * 38 + nDA * 43
Mixture of 02 + 01 + 1 + 2	38 + 54 + 43 + 59	117.7 + n02 * 38 + n01 * 54 + n1 * 43 + nZWP * 38 + n2 * 59 + nDA * 43

Datasheet – Valve terminal

Dimensions Download CAD data ➔ www.festo.com

Vertical stacking components, width 18 mm

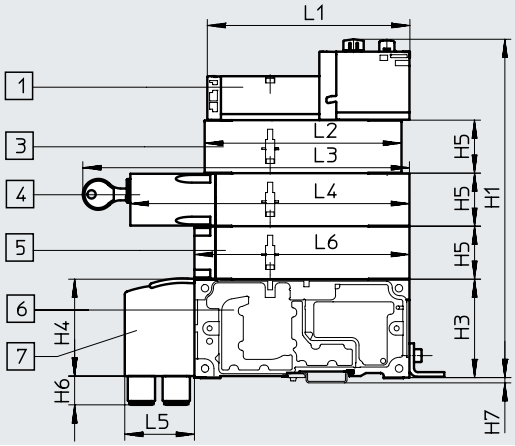

[1] Solenoid valve with two solenoid coils, width 18 mm
[3] Throttle plate
[4] Vertical pressure shut-off plate lockable (code ZT), optionally lockable with key (code ZS)
[5] Vertical supply plate
[6] Manifold sub-base
[7] 90°-connection plate

Dim.	L1	L2	L3 (Code ZT)	L4 (Code ZT)	L3 (Code ZS)	L4 (Code ZS)	L5	L6	H1	H3	H4	H5	H6	H7
[mm]	133.8	130	–	184.1	222.3	198.3	46	142	224	65	64	35	19	3.5

Vertical stacking components, width 18 mm

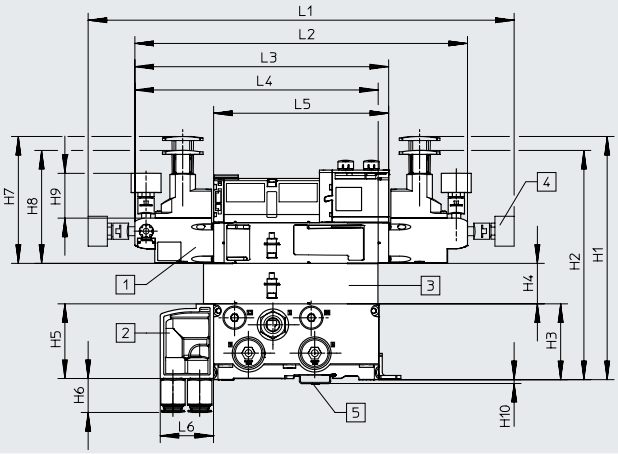

[1] Solenoid valve with two solenoid coils, width 18 mm
[2] Pressure regulator plate
[3] Throttle plate
[4] Pressure gauge, freely positionable
[5] H-rail mounting

Dim.	H1	H2	H3	H4	H5	H6	H7	H8	H9	H10	L1	L2	L3	L4	L5	L6
[mm]	209	197.1	65	34.9	64	25.7	109.1	97.3	38.6	3.5	366.4	286.1	218.3	209.3	150.5	46

Vertical stacking components, width 18 mm, with the pressure regulator plate also suitable for valves with symmetrical design

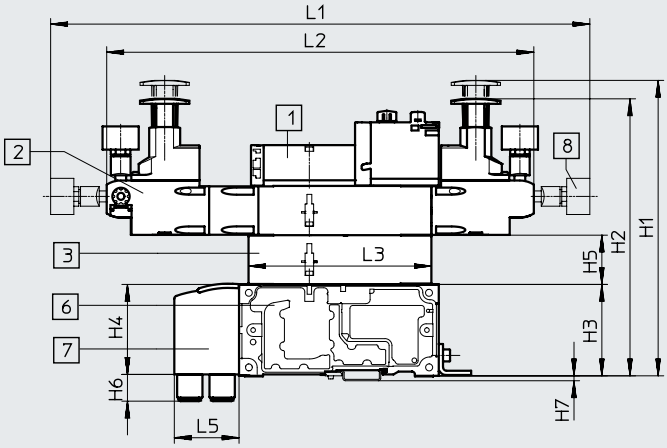

[1] Solenoid valve with two solenoid coils, width 18 mm
[2] Pressure regulator plate
[3] Throttle plate
[6] Manifold sub-base
[7] 90°-connection plate
[8] Pressure gauge, freely positionable

Datasheet – Valve terminal

Dimensions Download CAD data ➔ www.festo.com

Vertical stacking components, width 26 mm

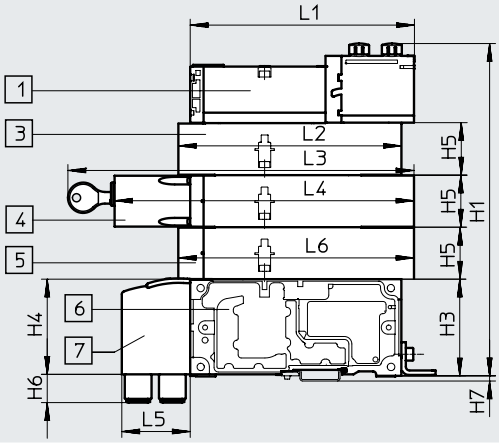

[1] Solenoid valve with two solenoid coils, width 26 mm
[3] Throttle plate
[4] Vertical pressure shut-off plate, lockable (code ZT), optionally lockable with key (code ZS)
[5] Vertical supply plate
[6] Manifold sub-base
[7] 90°-connection plate

Dim.	L1	L2	L3 (Code ZT)	L4 (Code ZT)	L3 (Code ZS)	L4 (Code ZS)	L5	L6	H1	H3	H4	H5	H6	H7
[mm]	150.8	150	–	201.4	239.5	215.5	46	158.5	224	65	64	35	19	3.5

Vertical stacking components, width 26 mm

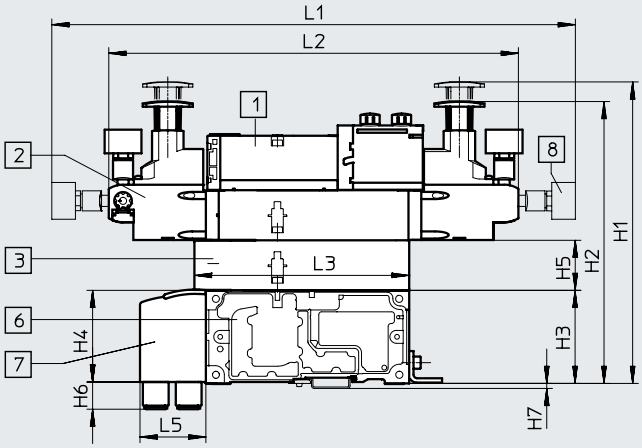

[1] Solenoid valve with two solenoid coils, width 26 mm
[2] Pressure regulator plate
[3] Throttle plate
[6] Manifold sub-base
[7] 90°-connection plate
[8] Pressure gauge, freely position-able

Dim.	L1	L2	L3	L5	H1	H2	H3	H4	H5	H6	H7
[mm]	365.7	286.1	150	46	210	197	65	64	35	19	3.5

Vertical stacking components, width 26 mm, with the pressure regulator plate also suitable for valves with symmetrical design

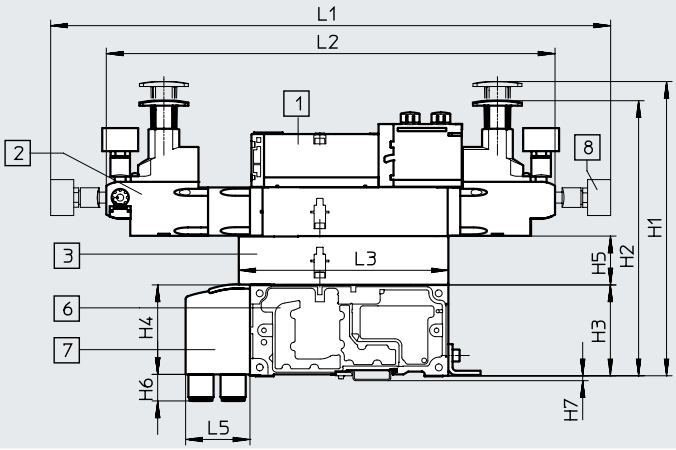

[1] Solenoid valve with two solenoid coils, width 26 mm
[2] Pressure regulator plate
[3] Throttle plate
[6] Manifold sub-base
[7] 90°-connection plate
[8] Pressure gauge, freely position-able

Dim.	L1	L2	L3	L5	H1	H2	H3	H4	H5	H6	H7
[mm]	400.7	321.1	150	46	210	197	65	64	35	19	3.5

Datasheet – Valve terminal

Dimensions Download CAD data ➔ www.festo.com

Vertical stacking components, width 42 mm

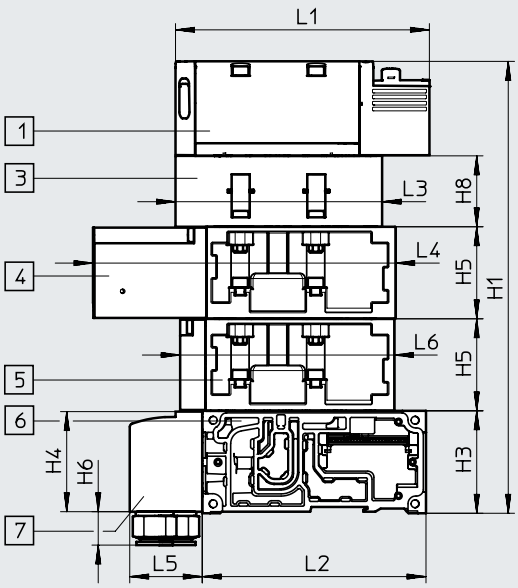

[1] Solenoid valve
[3] Throttle plate
[4] Vertical pressure shut-off plate
[5] Vertical supply plate
[6] Manifold sub-base
[7] 90°-connection plate

Dim.	L1	L2	L3	L4	L5	L6	H1	H3	H4	H5	H6	H7	H8
[mm]	137.8	142	105.3	173.8	46	117.6	236	65	64	45.3	25.7	3.5	28

Vertical stacking components, width 42 mm

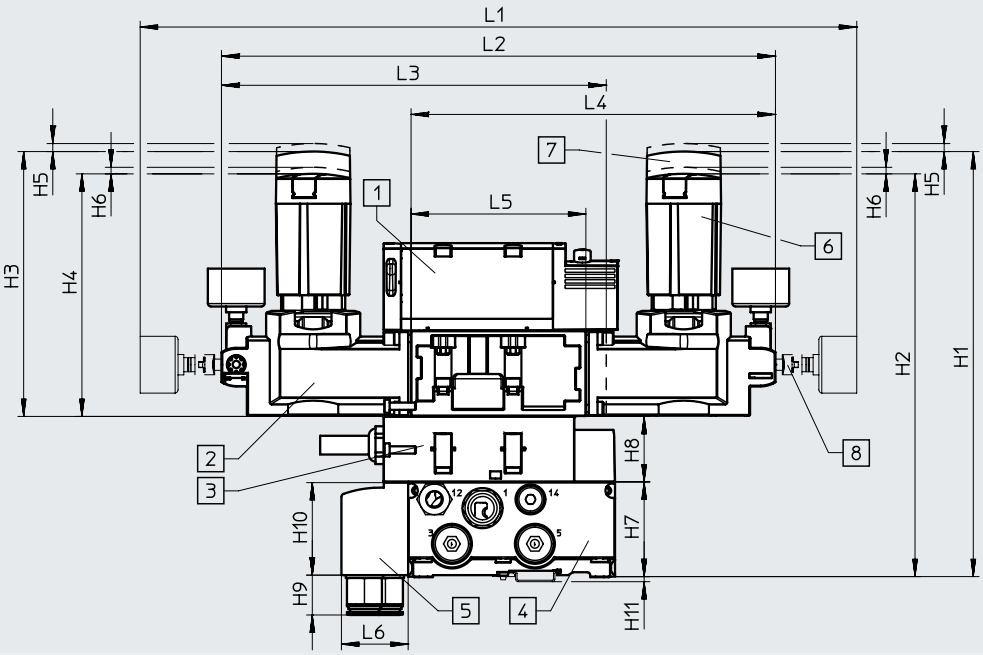

[1] Solenoid valve
[2] Pressure regulator plate
[3] Throttle plate
[4] Manifold sub-base
[5] 90°-connection plate
[6] Short rotary knob, lockable (standard)
[7] Long rotary knob, lockable
[8] Pressure gauge, freely positionable

Dim.	L1	L2	L3	L4	L5	L6	H1	H2	H3	H4	H5	H6	H7	H8	H9	H10	H11
[mm]	410.3	311.6	216.1	207.1	102.6	46	220	205	127	112	3	4.2	65	28	25.7	64	3.5

Note

- Pressure regulator plates for symmetrically designed valves with widths of 42 mm and 52 mm can only be ordered via the pressure regulator configurator VABF-S2.

➔ Internet: vabf-s2

The following can be selected using the pressure regulator configurator VABF-S2:
- Rotary knob, short version with locking element (standard)
- Rotary knob, long version with locking element
- Rotary knob with integrated lock

Datasheet – Valve terminal

Dimensions Download CAD data ➔ www.festo.com

Vertical stacking components, width 52 mm

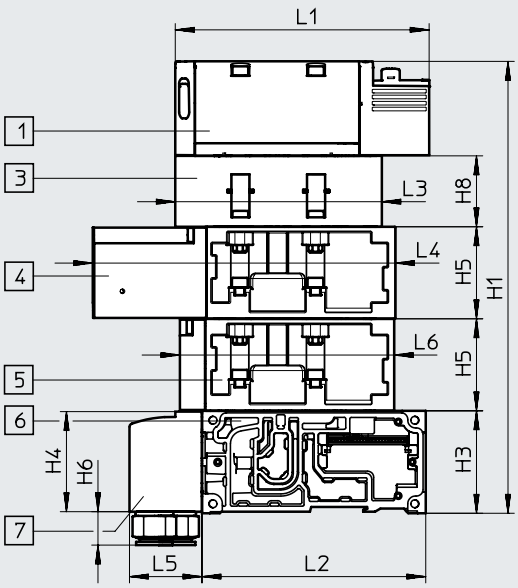

[1] Solenoid valve
[3] Throttle plate
[4] Vertical pressure shut-off plate
[5] Vertical supply plate
[6] Manifold sub-base
[7] 90°-connection plate

Dim.	L1	L2	L3	L4	L5	L6	H1	H3	H4	H5	H6	H8
[mm]	160.7	142	131	191.2	46	136	287.4	65	63.5	58.7	21.2	45

Vertical stacking components, width 52 mm

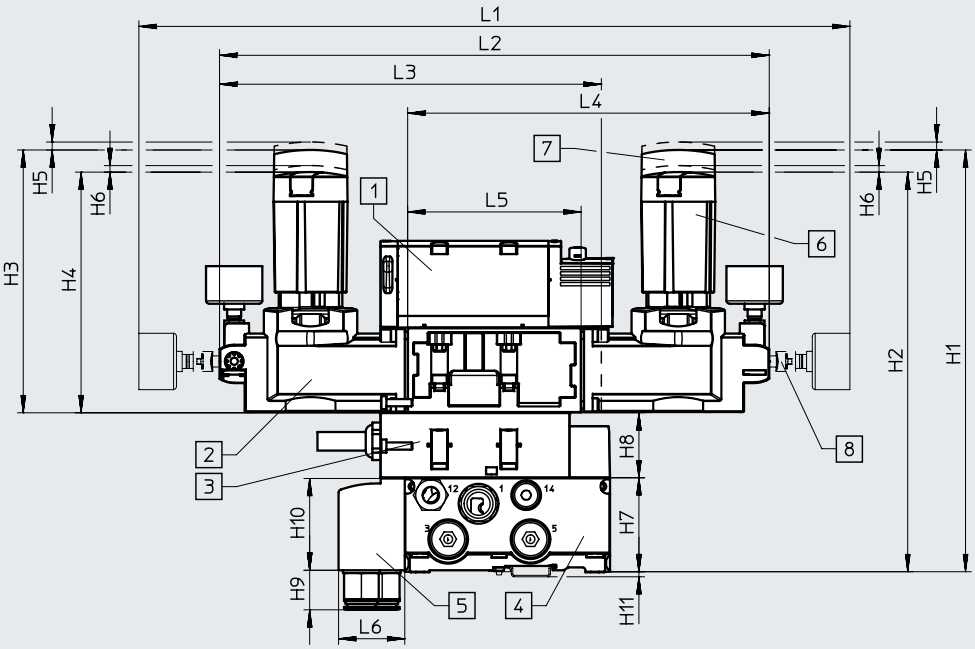

[1] Solenoid valve
[2] Pressure regulator plate
[3] Throttle plate
[4] Manifold sub-base
[5] 90°-connection plate
[6] Short rotary knob, lockable (standard)
[7] Long rotary knob, lockable
[8] Pressure gauge, freely positionable

Dim.	L1	L2	L3	L4	L5	L6	H1	H2	H3	H4	H5	H6	H7	H8	H9	H10	H11
[mm]	492	380.4	264.2	250.2	120	45.8	291	276	181	166	5.5	4.5	65	45	27.4	63.5	3.5

Note

- Pressure regulator plates for symmetrically designed valves with widths of 42 mm and 52 mm can only be ordered via the pressure regulator configurator VABF-S2.

➔ Internet: vabf-s2

The following can be selected using the pressure regulator configurator VABF-S2:
- Rotary knob, short version with locking element (standard)
- Rotary knob, long version with locking element
- Rotary knob with integrated lock

Datasheet – Valve terminal

Dimensions Download CAD data ➔ www.festo.com

Supply plate with silencer

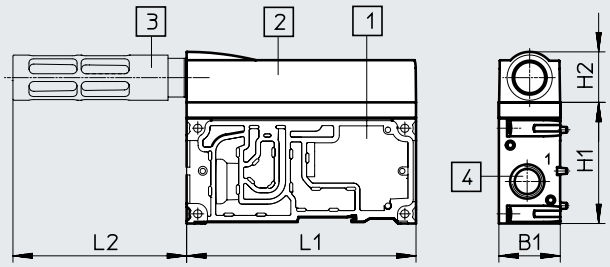

[1] Supply plate
[2] Exhaust port cover
[3] Silencer U-1/2-B
[4] Threaded connection G1/2

Dim.	L1	L2	H1	H2	B1
[mm]	142	107.5	75	31.5	38

Right end plate, VABE-S6-1R...

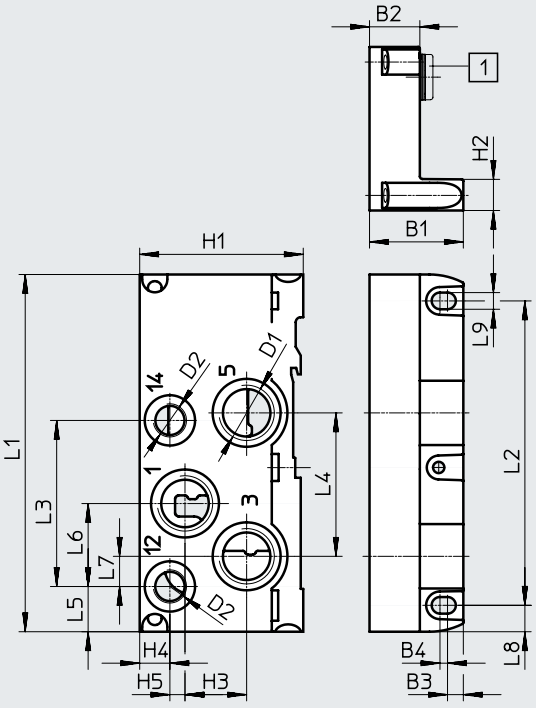

[1] Blanking plug

Right end plate, VABE-S6-2R...

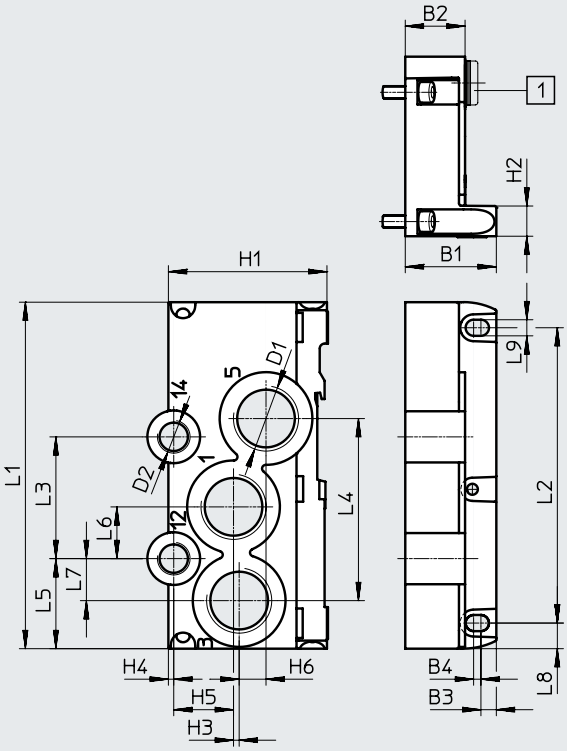

[1] Blanking plug

Type	L1	L2	L3	L4	L5	L6	L7	L8	L9	D1	D2	H1	H2	H3	H4	H5	H6	B1	B2	B3	B4	With[1)]
VABE-S6-1R-G12	142	121	66	57	18	33	12	10.5	6.6	G1/2	G1/4	65	12.5	24.5	12	6	–	37.3	22	6.3	3	[1]
VABE-S6-1RZ-G12																						–
VABE-S6-2R-G34	142	121	49.9	74.6	36.9	21.2	17.2	10.5	6.6	G3/4	G1/4	65	12.5	2.3	2.2	24.5	11	37.3	24.5	6.3	3	[1]
VABE-S6-2RZ-G34																						–

1) With blanking plug = internal pilot air supply, – without blanking plug = external pilot air supply
Special feature: There is no port 14 for VABE-S6-1R-G12 (code V).

Note: this product conforms to ISO 1179-1 and ISO 228-1.

Datasheet – Valve terminal

Dimensions Download CAD data ➔ www.festo.com

Right end plate with pilot air selector, VABE-S6-1RZ-G-B1

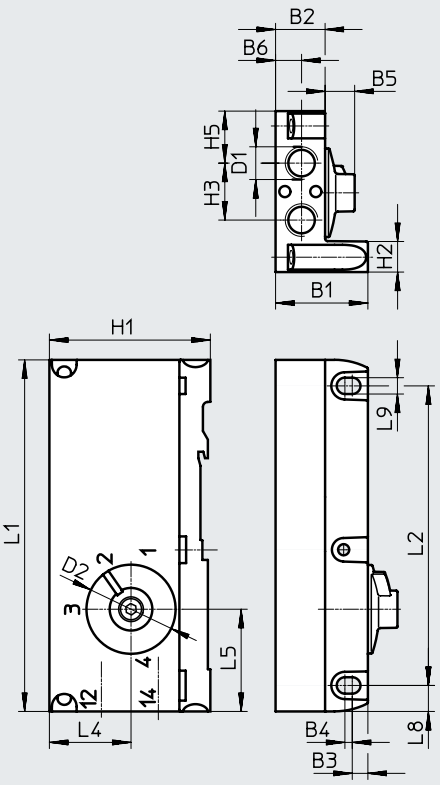

Type	L1	L2	L5	L8	L9	D1	D2	H1	H2	H3	H4	H5	B1	B2	B3	B4	B5	B6
VABE-S6-1RZ-G-B1	142	121	41.3	10.5	6.6	G1/4	37	65.4	12.5	23	33	21	37.3	20	6.3	3	12	10.5

Note: this product conforms to ISO 1179-1 and ISO 228-1.

Datasheet – Solenoid valves VSVA

- Valve width
  to ISO 15407-2
  • 18 mm
  • 26 mm
  to ISO 5599-2
  • 42 mm (ISO 1)
  • 52 mm (ISO 2)

- Voltage
  24 V DC

- Flow rate[1)]
  Width 18 mm: up to 550 (700) l/min
  Width 26 mm: up to 1100 (1350) l/min
  Width 42 mm: up to 1300 (1860) l/min
  Width 52 mm up to 2900 l/min

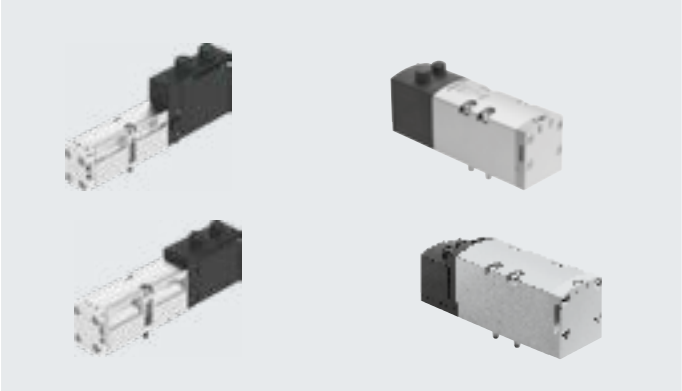

1) Flow rates in brackets apply to VTSA-F and VTSA-F-CB

General technical data for solenoid valves		
Design		Piston spool valve
Sealing principle		Soft
Overlap		Positive overlap (excluding types P53AD, P53BD)
		Negative overlap (types P53AD, P53BD)
Reset method		Mechanical or pneumatic, depending on the type used
Actuation type		Electrical
Electrical connection		Plug to ISO 15407-2, 2-pin (single solenoid types) or 4-pin (double solenoid and 5/3-way types)
Type of actuation		Piloted
Degree of protection to EN 60529		IP65, NEMA 4 (for all types of signal transmission when mounted)
Exhaust function, can be throttled		Via individual sub-base, via throttle plate (not with valve type T22)
Type of mounting		On manifold sub-base, on individual sub-base
Mounting position		Any
Manual override		Detenting, non-detenting, concealed
Signal status display		LED (except types with signal status display sensor, and part nos.: 560727 and 560728)
Sensor signal status indication		Yellow LED
Duty cycle	[%]	100
Pollution degree		3
Surge resistance	[kV]	2.5
Nominal operating voltage	[V DC]	24 (dependent on valve type)
Permissible voltage fluctuations	[%]	±10
Pneumatic connections		
Supply	1	Via the manifold sub-base of the valve terminal or via individual sub-base
Exhausting	3/5	
Working ports	2/4	
Pilot air supply	1 2/14	
Pilot exhaust air	8 2/84	Either ducted or unducted

Datasheet – Solenoid valves

Pneumatic characteristic data										
Terminal code	VC	VV	N	K	H	P	Q	R	M	O
Valve code	T22C	T22CV	T32U	T32C	T32H	T32F	T32N	T32W	M52-A	M52-M
Flow direction										
Any	–	■	–	–	–	–	–	–	■	■
Reversible only	–	–	–	–	–	■	■	■	–	–
Not reversible	■	–	■	■	■	–	–	–	–	–
Reset method										
Pneumatic spring	■	■	■	■	■	■	■	■	■	–
Mechanical spring	–	–	–	–	–	–	–	–	–	■

Pneumatic characteristic data										
Terminal code	J	D	B	G	E	SA	SB	SD	SE	VG
Valve code	B52	D52	P53U	P53C	P53E	P53ED	P53AD	P53BD	P53EP	P53F
Flow direction										
Any	■	■	■	■	■	–	■	–	–	■
Reversible only	–	–	–	–	–	–	–	–	–	–
Not reversible	–	–	–	–	–	■	–	■	■	–
Reset method										
Pneumatic spring	–	–	–	–	–	–	–	–	–	–
Mechanical spring	–	–	■	■	■	■	■	■	■	■

Flow direction of solenoid valves

Solenoid valves only with reversible flow direction

- These valves must only be operated on pressure zones with reversible supply (3 and 5 with supply pressure 1 as exhaust air) or on a reversible pressure regulator. If necessary, create separate pressure zones with duct separation.
- Reversible 3/2-way solenoid valves do not permit the special function "ducted pilot exhaust air"
- Ports 12 and 14 on the end plate variants must be supplied with the same pressure.
- Right end plate with pilot air selector: can be realised via position 1 or 2
- Right end plate with threaded connections: 12 and 14 must be supplied with the same pressure level

Solenoid valves with any flow direction

- Valves with any flow direction such as the 5/2-way solenoid valve, code M, are suitable for vacuum operation (standard valves such as the 2x 2/2-way solenoid valve with code VC must not be used for vacuum operation).
- An exception is the 2x 2/2-way solenoid valve with code VV (T22CV), which only allows vacuum operation at ports 3 and 5. The solenoid valve with code VV (T22CV) cannot be combined with other valve functions; a separate pressure zone is required.

Datasheet – Solenoid valves

Operating and environmental conditions			
Operating medium			Compressed air to ISO 8573-1:2010 [7:4:4]
Pilot medium			Compressed air to ISO 8573-1:2010 [7:4:4]
Notes on operating/ Pilot medium			Lubricated operation possible (in which case lubricated operation will always be required)
Operating pressure, pilot air supply[2]		[bar]	−0.9 ... +10 (valves with any flow direction and reversible valves)
			3 ... 10 (non-reversible valves)
		[MPa]	−0.09 ... +1 (valves with any flow direction and reversible valves)
			0.3 ... 1 (non-reversible valves)
Pilot pressure		[bar]	3 ... 10
		[MPa]	0.3 ... 1
Pilot air supply			External
			Internal via valve terminal
Ambient temperature		[°C]	−5 ... +50
Relative humidity		[%]	0 ... 90
Certification			BIA (for characteristic SP and/or SN only)
	Direct voltage 24 V DC		C-Tick (only size 52 mm and solenoid valves with sensor (position sensing))
			c UL us – Recognized (OL)
CE marking (see declaration of conformity)	Direct voltage 24 V DC		To EU EMC Directive [1]

1) For information about the area of use, see the EC declaration of conformity at: www.festo.com/catalogue/... → Support/Downloads.
If the devices are subject to usage restrictions in residential, commercial or light-industrial environments, further measures for the reduction of the emitted interference may be necessary.

2) Solenoid valves with code VC (2/2-way type ... T22C), N (3/2-way type ... T32U), K (3/2-way type ... T32C), H (3/2-way type ... T32H) must not be operated with vacuum; the operating pressure here is 3 ... 10 bar

Datasheet – Solenoid valve width 18 mm

- Valve width
  to ISO 15407-2
  18 mm

- Voltage
  24 V DC

- Flow rate
  Valve width 18 mm:
  VTSA up to 550 l/min
  VTSA-F up to 700 l/min
  VTSA-F-CB up to 700 l/min

Safety characteristics for valve		
Conforms to		EN 13849-1/2
CE marking (see declaration of conformity)	Direct voltage 24 V DC	To EU EMC Directive [1] (solenoid valves with sensor only)
Shock resistance		Shock test with severity level 2, to EN 60068-2-27
Vibration resistance		Transport application test with severity level 2, to EN 60068-2-6

1) For information about the area of use, see the EC declaration of conformity at: www.festo.com/catalogue/... ➔ Support/Downloads.
If the devices are subject to usage restrictions in residential, commercial or light-industrial environments, further measures for the reduction of the emitted interference may be necessary.

Safety characteristics for valve, 24 V DC

Valve function (with valve code)	Terminal code	Test pulses	
		Max. positive test pulse with logic 0 [µs]	Max. negative test pulse with logic 1 [µs]
5/2-way, double solenoid (B52)	J	1500	800
5/2-way, double solenoid with dominant signal (D52)	D	1700	1200
5/2-way, single solenoid (M52-A)	M	1500	800
5/2-way, single solenoid (M52-M)	O	1500	800
5/3-way, closed (P53C)	G	1500	800
5/3-way, exhausted (P53E)	E	1500	800
5/3-way, pressurised (P53U)	B	1500	800
5/3-way, exhausted, switching position 14 detenting (P53ED)	SA	1500	800
5/3-way, exhausted, switching position 12 detenting (P53EP)	SE	1500	800
5/3-way, port 2 pressurised, 4 exhausted, switching position 14 detenting (P53AD)	SB	1500	800
5/3-way, port 4 pressurised, 2 exhausted, switching position 14 detenting (P53BD)	SD	1500	800
2x3/2-way, single solenoid, closed (T32C)	K	1700	1200
2x3/2-way, single solenoid, open (T32U)	N	1700	1200
2x3/2-way, single solenoid, open/closed (T32H)	H	1700	1200
2x3/2-way, single solenoid, closed (T32N)	Q	1700	1200
2x3/2-way, single solenoid, open (T32F)	P	1700	1200
2x3/2-way, single solenoid, open/closed (T32W)	R	1700	1200
2x2/2-way, single solenoid, closed (T22C)	VC	1700	1200
2x2/2-way, single solenoid, closed (T22CV)	VV	1700	1200

Datasheet – Solenoid valve width 18 mm

Datasheet for valve Valve function (with valve code)	Terminal code	Flow direction			Reset method		Weight [g]
		Any	Reversible only	Not reversible	Pneumatic spring	Mechanical spring	
5/2-way, double solenoid (B52)	J	■	–	–	–	–	172
5/2-way, double solenoid with dominant signal (D52)	D	■	–	–	–	–	172
5/2-way, single solenoid (M52-A)	M	■	–	–	■	–	163
5/2-way, single solenoid (M52-M)	O	■	–	–	–	■	163
5/3-way, closed[1] (P53C)	G	■	–	–	–	■	191
5/3-way, exhausted[1] (P53E)	E	■	–	–	–	■	191
5/3-way, pressurised[1] (P53U)	B	■	–	–	–	■	191
5/3-way, exhausted, switching position 14 detenting (P53ED)	SA	–	–	■	–	■	170
5/3-way, exhausted, switching position 12 detenting (P53EP)	SE	–	–	■	–	■	170
5/3-way, port 2 pressurised, 4 exhausted, switching position 14 detenting (P53AD)	SB	■	–	–	–	■	172
5/3-way, port 4 pressurised, 2 exhausted, switching position 14 detenting (P53BD)	SD	–	–	■	–	■	172
2x3/2-way, single solenoid, closed (T32C)	K	–	–	■	■	–	190
2x3/2-way, single solenoid, open (T32U)	N	–	–	■	■	–	190
2x3/2-way, single solenoid, open/closed (T32H)	H	–	–	■	■	–	190
2x3/2-way, single solenoid, closed (T32N)	Q	–	■	–	■	–	190
2x3/2-way, single solenoid, open (T32F)	P	–	■	–	■	–	190
2x3/2-way, single solenoid, open/closed (T32W)	R	–	■	–	■	–	190
2x2/2-way, single solenoid, closed (T22C)	VC	–	–	■	■	–	190
2x2/2-way, single solenoid, closed (T22CV)	VV	■	–	–	■	–	190

1) If neither solenoid coil is energised, the valve is moved to its mid-position by spring force.
If both solenoid coils are energised at the same time, the valve remains in the previously assumed switching position.

Datasheet – Solenoid valve width 18 mm

Standard nominal flow rate of valve/valve terminal [l/min]						
Valve function (with valve code)	Terminal code	Flow rate				
		Valve	Valve on valve terminal			Valve on individual sub-base
			VTSA	VTSA-F	VTSA-F-CB	
5/2-way, double solenoid (B52)	J	750	550	700	700	600
5/2-way, double solenoid with dominant signal (D52)	D	750	550	700	700	600
5/2-way, single solenoid (M52-A)	M	750	550	700	700	600
5/2-way, single solenoid (M52-M)	O	750	550	700	700	600
5/3-way, closed (P53C)	G	700	450	650	650	550
5/3-way, exhausted (P53E)	E	700[1)] 330[2)]	450[1)] 330[2)]	480[1)] 330[2)]	480[1)] 330[2)]	500[1)] 330[2)]
5/3-way, pressurised (P53U)	B	700[1)] 330[2)]	450[1)] 330[2)]	480[1)] 330[2)]	480[1)] 330[2)]	500[1)] 330[2)]
5/3-way, exhausted, switching position 14 detenting (P53ED)	SA	–	380[1)] 310[2)]	430[1)] 360[2)]	430[1)] 360[2)]	390[1)] 310[2)]
5/3-way, exhausted, switching position 12 detenting (P53EP)	SE	–	380[1)] 300[2)]	460[1)] 350[2)]	460[1)] 350[2)]	390[1)] 320[2)]
5/3-way, port 2 pressurised, 4 exhausted, switching position 14 detenting (P53AD)	SB	–	380[1)] 350[2)]	440[1)] 400[2)]	440[1)] 400[2)]	380[1)] 360[2)]
5/3-way, port 4 pressurised, 2 exhausted, switching position 14 detenting (P53BD)	SD	–	370[1)] 340[2)] 360[3)] 360[4)]	430[1)] 360[2)] 450[3)] 450[4)]	430[1)] 360[2)] 450[3)] 450[4)]	400[1)] 350[2)] 390[3)] 380[4)]
2x3/2-way, single solenoid, closed (T32C)	K	600	400	550	550	500
2x3/2-way, single solenoid, open (T32U)	N	600	400	550	550	500
2x3/2-way, single solenoid, open/closed (T32H)	H	600	400	550	550	500
2x3/2-way, single solenoid, closed (T32N)	Q	600	400	550	550	500
2x3/2-way, single solenoid, open (T32F)	P	600	400	550	550	500
2x3/2-way, single solenoid, open/closed (T32W)	R	600	400	550	550	500
2x2/2-way, single solenoid, closed (T22C)	VC	700	500	650	650	500
2x2/2-way, single solenoid, closed (T22CV)	VV	700	500	650	650	500

1) Switching position
2) Mid-position
3) Switching position 4 → 5
4) Mid-position 2 → 3

Note

When using the solenoid valves VSVA-B-P53AD-...- or VSVA-B-P53BD-...- (terminal code SB or SD) for unobstructed exhausting (1→ 2 or 1→ 4) in the detenting or mid-position, the flow rate can reduce or drop to 0 l/min if the operating pressure is greater than 6 bar. This does not happen if a tube measuring at least 15 cm in length is used at port 2/4.

Datasheet – Solenoid valve width 18 mm

Valve switching times in [ms] Valve function (with valve code)	Terminal code	On	Off	Changeover
5/2-way, double solenoid (B52)	J	–	–	11
5/2-way, double solenoid with dominant signal (D52)	D	–	–	13
5/2-way, single solenoid (M52-A)	M	22	28	–
5/2-way, single solenoid (M52-M)	O	12	38	–
5/3-way, closed (P53C)	G	15	44	–
5/3-way, exhausted (P53E)	E	15	44	–
5/3-way, pressurised (P53U)	B	15	44	–
5/3-way, exhausted, switching position 14 detenting (P53ED)	SA	13 for control side 12 10 for control side 14	37 for control side 12	(24)
5/3-way, exhausted, switching position 12 detenting (P53EP)	SE	10 for control side 12 13 for control side 14	30 for control side 12	(23)
5/3-way, port 2 pressurised, 4 exhausted, switching position 14 detenting (P53AD)	SB	12 for control side 12 9 for control side 14	28 for control side 12	–
5/3-way, port 4 pressurised, 2 exhausted, switching position 14 detenting (P53BD)	SD	12 for control side 12 9 for control side 14	28 for control side 12	–
2x3/2-way, single solenoid, closed (T32C)	K	12	30	–
2x3/2-way, single solenoid, open (T32U)	N	12	30	–
2x3/2-way, single solenoid, open/closed (T32H)	H	12	30	–
2x3/2-way, single solenoid, closed (T32N)	Q	25	12	–
2x3/2-way, single solenoid, open (T32F)	P	25	12	–
2x3/2-way, single solenoid, open/closed (T32W)	R	25	12	–
2x2/2-way, single solenoid, closed (T22C)	VC	12	30	–
2x2/2-way, single solenoid, closed (T22CV)	VV	12	30	–

Characteristic coil data Valve function (with valve code)	Terminal code	Characteristic coil data at 24 V DC in [W]
5/2-way, double solenoid (B52)	J	1.6
5/2-way, double solenoid with dominant signal (D52)	D	1.3
5/2-way, single solenoid (M52-A)	M	1.6
5/2-way, single solenoid (M52-M)	O	1.6
5/3-way, closed (P53C)	G	1.6
5/3-way, exhausted (P53E)	E	1.6
5/3-way, pressurised (P53U)	B	1.6
5/3-way, exhausted, switching position 14 detenting (P53ED)	SA	1.6
5/3-way, exhausted, switching position 12 detenting (P53EP)	SE	1.6
5/3-way, port 2 pressurised, 4 exhausted, switching position 14 detenting (P53AD)	SB	1.6
5/3-way, port 4 pressurised, 2 exhausted, switching position 14 detenting (P53BD)	SD	1.6
2x3/2-way, single solenoid, closed (T32C)	K	1.3
2x3/2-way, single solenoid, open (T32U)	N	1.3
2x3/2-way, single solenoid, open/closed (T32H)	H	1.3
2x3/2-way, single solenoid, closed (T32N)	Q	1.3
2x3/2-way, single solenoid, open (T32F)	P	1.3
2x3/2-way, single solenoid, open/closed (T32W)	R	1.3
2x2/2-way, single solenoid, closed (T22C)	VC	1.3
2x2/2-way, single solenoid, closed (T22CV)	VV	1.3

Materials	
Housing	Die-cast aluminium, PA
Seals	FPM, NBR, HNBR
Screws	Galvanised steel
Note on materials	RoHS-compliant

Ordering data – Solenoid valve 24 V DC

Ordering data – Solenoid valve VSVA, MO non-detenting/detenting (D)

	Terminal code	Valve function	Valve code	Width	Part no.	Type
Solenoid valves, 24 V DC						
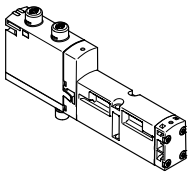	VC	2x 2/2-way valve, single solenoid, normally closed, pneumatic spring return	T22C	18 mm	**561155**	**VSVA-B-T22C-AZD-A2-1T1L**
	VV	2x 2/2-way valve, single solenoid, normally closed, pneumatic spring return, vacuum operation possible at 3 and 5	T22CV	18 mm	**561159**	**VSVA-B-T22CV-AZD-A2-1T1L**
	N	2x 3/2-way valve, single solenoid, normally open	T32U	18 mm	**539178**	**VSVA-B-T32U-AZD-A2-1T1L**
	K	2x 3/2-way valve, single solenoid, normally closed	T32C	18 mm	**539176**	**VSVA-B-T32C-AZD-A2-1T1L**
	H	2x 3/2-way valve, single solenoid, 1x normally open, 1x normally closed	T32H	18 mm	**539180**	**VSVA-B-T32H-AZD-A2-1T1L**
	P	2x 3/2-way valve, single solenoid, reverse operation, normally open	T32F	18 mm	**539179**	**VSVA-B-T32F-AZD-A2-1T1L**
	Q	2x 3/2-way valve, single solenoid, reverse operation, normally closed	T32N	18 mm	**539177**	**VSVA-B-T32N-AZD-A2-1T1L**
	R	2x 3/2-way valve, single solenoid, reverse operation, 1x normally open, 1x normally closed	T32W	18 mm	**539181**	**VSVA-B-T32W-AZD-A2-1T1L**
	M	5/2-way valve, single solenoid, pneumatic spring return	M52-A	18 mm	**539184**	**VSVA-B-M52-AZD-A2-1T1L**
	O	5/2-way valve, single solenoid, reset via mechanical spring	M52-M	18 mm	**539185**	**VSVA-B-M52-MZD-A2-1T1L**
	J	5/2-way valve, double solenoid	B52	18 mm	**539182**	**VSVA-B-B52-ZD-A2-1T1L**
	D	5/2-way valve, double solenoid, with dominant signal	D52	18 mm	**539183**	**VSVA-B-D52-ZD-A2-1T1L**
	B	5/3-way solenoid valve, Mid-position pressurised	P53U	18 mm	**539186**	**VSVA-B-P53U-ZD-A2-1T1L**
	G	5/3-way solenoid valve, mid-position closed	P53C	18 mm	**539188**	**VSVA-B-P53C-ZD-A2-1T1L**
	E	5/3-way solenoid valve, Mid-position exhausted	P53E	18 mm	**539187**	**VSVA-B-P53E-ZD-A2-1T1L**
	SA	5/3-way solenoid valve, mid-position exhausted, switching position 14 detenting, mechanical spring return	P53ED	18 mm	**8031814**	**VSVA-B-P53ED-ZD-A2-1T1L**
	SE	5/3-way solenoid valve, mid-position exhausted, switching position 12 detenting, mechanical spring return	P53EP	18 mm	**8031818**	**VSVA-B-P53EP-ZD-A2-1T1L**
	SB	5/3-way solenoid valve, mid-position 1x exhausted from 4 to 5, 1x pressurised from 1 to 2, switching position 14 detenting, same function in both switching positions: pressurised from 1 to 4 and exhausted from 2 to 3, reset via mechanical spring	P53AD	18 mm	**8031815**	**VSVA-B-P53AD-ZD-A2-1T1L**
	SD	5/3-way solenoid valve, mid-position 1x exhausted from 2 to 3, 1x pressurised from 1 to 4, switching position 14 detenting, same function in both switching positions: pressurised from 1 to 2 and exhausted from 4 to 5, reset via mechanical spring	P53BD	18 mm	**8031817**	**VSVA-B-P53BD-ZD-A2-1T1L**
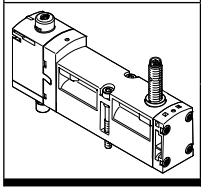	SS	5/2-way valve, single solenoid, mechanical spring return, inductive sensor with PNP output with 0.5 m connecting cable and 4-pin sensor push-in connector M12x1	M52-M	18 mm	**573201**	**VSVA-B-M52-MZD-A2-1T1L-APX-0.5**
	SO	5/2-way valve, single solenoid, mechanical spring return, inductive sensor with PNP output and 3-pin sensor push-in connector M8x1	M52-M	18 mm	**573202**	**VSVA-B-M52-MZD-A2-1T1L-APP**

Ordering data – Solenoid valve 24 V DC

Ordering data – Solenoid valve VSVA with cover cap for MO non-detenting/heavy duty, detenting via accessory (TR)

	Terminal code	Valve function	Valve code	Width	Part no.	Type
Solenoid valves, 24 V DC						
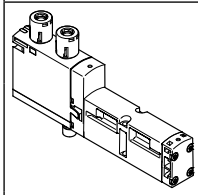	VC	2x 2/2-way valve, single solenoid, normally closed, pneumatic spring return	T22C	18 mm	**8033457**	**VSVA-B-T22C-AZTR-A2-1T1L**
	VV	2x 2/2-way valve, single solenoid, normally closed, pneumatic spring return, vacuum operation possible at 3 and 5	T22CV	18 mm	**8033458**	**VSVA-B-T22CV-AZTR-A2-1T1L**
	N	2x 3/2-way valve, single solenoid, normally open	T32U	18 mm	**8033446**	**VSVA-B-T32U-AZTR-A2-1T1L**
	K	2x 3/2-way valve, single solenoid, normally closed	T32C	18 mm	**8033444**	**VSVA-B-T32C-AZTR-A2-1T1L**
	H	2x 3/2-way valve, single solenoid, 1x normally open, 1x normally closed	T32H	18 mm	**8033448**	**VSVA-B-T32H-AZTR-A2-1T1L**
	P	2x 3/2-way valve, single solenoid, reverse operation, normally open	T32F	18 mm	**8033447**	**VSVA-B-T32F-AZTR-A2-1T1L**
	Q	2x 3/2-way valve, single solenoid, reverse operation, normally closed	T32N	18 mm	**8033445**	**VSVA-B-T32N-AZTR-A2-1T1L**
	R	2x 3/2-way valve, single solenoid, reverse operation, 1x normally open, 1x normally closed	T32W	18 mm	**8033449**	**VSVA-B-T32W-AZTR-A2-1T1L**
	M	5/2-way valve, single solenoid, pneumatic spring return	M52-A	18 mm	**8033452**	**VSVA-B-M52-AZTR-A2-1T1L**
	O	5/2-way valve, single solenoid, reset via mechanical spring	M52-M	18 mm	**8033453**	**VSVA-B-M52-MZTR-A2-1T1L**
	J	5/2-way valve, double solenoid	B52	18 mm	**8033450**	**VSVA-B-B52-ZTR-A2-1T1L**
	D	5/2-way valve, double solenoid, with dominant signal	D52	18 mm	**8033451**	**VSVA-B-D52-ZTR-A2-1T1L**
	B	5/3-way solenoid valve, Mid-position pressurised	P53U	18 mm	**8033454**	**VSVA-B-P53U-ZTR-A2-1T1L**
	G	5/3-way solenoid valve, mid-position closed	P53C	18 mm	**8033456**	**VSVA-B-P53C-ZTR-A2-1T1L**
	E	5/3-way solenoid valve, Mid-position exhausted	P53E	18 mm	**8033455**	**VSVA-B-P53E-ZTR-A2-1T1L**
	SA	5/3-way solenoid valve, mid-position exhausted, switching position 14 detenting, mechanical spring return	P53ED	18 mm	**8039181**	**VSVA-B-P53ED-ZTR-A2-1T1L**
	SE	5/3-way solenoid valve, mid-position exhausted, switching position 12 detenting, mechanical spring return	P53EP	18 mm	**8039190**	**VSVA-B-P53EP-ZTR-A2-1T1L**
	SB	5/3-way solenoid valve, mid-position 1x exhausted from 4 to 5, 1x pressurised from 1 to 2, switching position 14 detenting, same function in both switching positions: pressurised from 1 to 4 and exhausted from 2 to 3, reset via mechanical spring	P53AD	18 mm	**8039184**	**VSVA-B-P53AD-ZTR-A2-1T1L**
	SD	5/3-way solenoid valve, mid-position 1x exhausted from 2 to 3, 1x pressurised from 1 to 4, switching position 14 detenting, same function in both switching positions: pressurised from 1 to 2 and exhausted from 4 to 5, reset via mechanical spring	P53BD	18 mm	**8040110**	**VSVA-B-P53BD-ZTR-A2-1T1L**
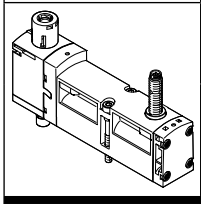	SS	5/2-way valve, single solenoid, mechanical spring return, inductive sensor with PNP output with 0.5 m connecting cable and 4-pin sensor push-in connector M12x1	M52-M	18 mm	**8033459**	**VSVA-B-M52-MZTR-A2-1T1L-APX-0.5**
	SO	5/2-way valve, single solenoid, mechanical spring return, inductive sensor with PNP output and 3-pin sensor push-in connector M8x1	M52-M	18 mm	**8033460**	**VSVA-B-M52-MZTR-A2-1T1L-APP**

Ordering data – Solenoid valve 24 V DC

Ordering data – Solenoid valve VSVA with cover cap for MO, non-detenting (H)

	Terminal code	Valve function	Valve code	Width	Part no.	Type
Solenoid valves, 24 V DC						
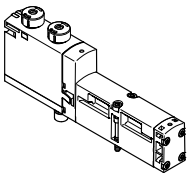	VC	2x 2/2-way valve, single solenoid, normally closed, pneumatic spring return	T22C	18 mm	**8033475**	**VSVA-B-T22C-AZH-A2-1T1L**
	VV	2x 2/2-way valve, single solenoid, normally closed, pneumatic spring return, vacuum operation possible at 3 and 5	T22CV	18 mm	**8033476**	**VSVA-B-T22CV-AZH-A2-1T1L**
	N	2x 3/2-way valve, single solenoid, normally open	T32U	18 mm	**8033464**	**VSVA-B-T32U-AZH-A2-1T1L**
	K	2x 3/2-way valve, single solenoid, normally closed	T32C	18 mm	**8033462**	**VSVA-B-T32C-AZH-A2-1T1L**
	H	2x 3/2-way valve, single solenoid, 1x normally open, 1x normally closed	T32H	18 mm	**8033466**	**VSVA-B-T32H-AZH-A2-1T1L**
	P	2x 3/2-way valve, single solenoid, reverse operation, normally open	T32F	18 mm	**8033465**	**VSVA-B-T32F-AZH-A2-1T1L**
	Q	2x 3/2-way valve, single solenoid, reverse operation, normally closed	T32N	18 mm	**8033463**	**VSVA-B-T32N-AZH-A2-1T1L**
	R	2x 3/2-way valve, single solenoid, reverse operation, 1x normally open, 1x normally closed	T32W	18 mm	**8033467**	**VSVA-B-T32W-AZH-A2-1T1L**
	M	5/2-way valve, single solenoid, pneumatic spring return	M52-A	18 mm	**8033470**	**VSVA-B-M52-AZH-A2-1T1L**
	O	5/2-way valve, single solenoid, reset via mechanical spring	M52-M	18 mm	**8033471**	**VSVA-B-M52-MZH-A2-1T1L**
	J	5/2-way valve, double solenoid	B52	18 mm	**8033468**	**VSVA-B-B52-ZH-A2-1T1L**
	D	5/2-way valve, double solenoid, with dominant signal	D52	18 mm	**8033469**	**VSVA-B-D52-ZH-A2-1T1L**
	B	5/3-way solenoid valve, Mid-position pressurised	P53U	18 mm	**8033472**	**VSVA-B-P53U-ZH-A2-1T1L**
	G	5/3-way solenoid valve, mid-position closed	P53C	18 mm	**8033474**	**VSVA-B-P53C-ZH-A2-1T1L**
	E	5/3-way solenoid valve, Mid-position exhausted	P53E	18 mm	**8033473**	**VSVA-B-P53E-ZH-A2-1T1L**
	SA	5/3-way solenoid valve, mid-position exhausted, switching position 14 detenting, mechanical spring return	P53ED	18 mm	**8039182**	**VSVA-B-P53ED-ZH-A2-1T1L**
	SE	5/3-way solenoid valve, mid-position exhausted, switching position 12 detenting, mechanical spring return	P53EP	18 mm	**8039191**	**VSVA-B-P53EP-ZH-A2-1T1L**
	SB	5/3-way solenoid valve, mid-position 1x exhausted from 4 to 5, 1x pressurised from 1 to 2, switching position 14 detenting, same function in both switching positions: pressurised from 1 to 4 and exhausted from 2 to 3, reset via mechanical spring	P53AD	18 mm	**8039185**	**VSVA-B-P53AD-ZH-A2-1T1L**
	SD	5/3-way solenoid valve, mid-position 1x exhausted from 2 to 3, 1x pressurised from 1 to 4, switching position 14 detenting, same function in both switching positions: pressurised from 1 to 2 and exhausted from 4 to 5, reset via mechanical spring	P53BD	18 mm	**8040111**	**VSVA-B-P53BD-ZH-A2-1T1L**
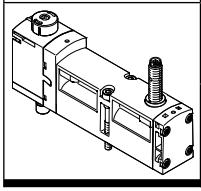	SS	5/2-way valve, single solenoid, mechanical spring return, inductive sensor with PNP output with 0.5 m connecting cable and 4-pin sensor push-in connector M12x1	M52-M	18 mm	**8033477**	**VSVA-B-M52-MZH-A2-1T1L-APX-0.5**
	SO	5/2-way valve, single solenoid, mechanical spring return, inductive sensor with PNP output and 3-pin sensor push-in connector M8x1	M52-M	18 mm	**8033478**	**VSVA-B-M52-MZH-A2-1T1L-APP**

Ordering data – Solenoid valve 24 V DC

Ordering data – Solenoid valve VSVA with cover cap for MO, concealed

	Terminal code	Valve function	Valve code	Width	Part no.	Type
Solenoid valves, 24 V DC						
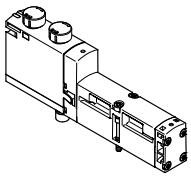	VC	2x 2/2-way valve, single solenoid, normally closed, pneumatic spring return	T22C	18 mm	**8033493**	**VSVA-B-T22C-AZ-A2-1T1L**
	VV	2x 2/2-way valve, single solenoid, normally closed, pneumatic spring return, vacuum operation possible at 3 and 5	T22CV	18 mm	**8033494**	**VSVA-B-T22CV-AZ-A2-1T1L**
	N	2x 3/2-way valve, single solenoid, normally open	T32U	18 mm	**8033482**	**VSVA-B-T32U-AZ-A2-1T1L**
	K	2x 3/2-way valve, single solenoid, normally closed	T32C	18 mm	**8033480**	**VSVA-B-T32C-AZ-A2-1T1L**
	H	2x 3/2-way valve, single solenoid, 1x normally open, 1x normally closed	T32H	18 mm	**8033484**	**VSVA-B-T32H-AZ-A2-1T1L**
	P	2x 3/2-way valve, single solenoid, reverse operation, normally open	T32F	18 mm	**8033483**	**VSVA-B-T32F-AZ-A2-1T1L**
	Q	2x 3/2-way valve, single solenoid, reverse operation, normally closed	T32N	18 mm	**8033481**	**VSVA-B-T32N-AZ-A2-1T1L**
	R	2x 3/2-way valve, single solenoid, reverse operation, 1x normally open, 1x normally closed	T32W	18 mm	**8033485**	**VSVA-B-T32W-AZ-A2-1T1L**
	M	5/2-way valve, single solenoid, pneumatic spring return	M52-A	18 mm	**8033488**	**VSVA-B-M52-AZ-A2-1T1L**
	O	5/2-way valve, single solenoid, reset via mechanical spring	M52-M	18 mm	**8033489**	**VSVA-B-M52-MZ-A2-1T1L**
	J	5/2-way valve, double solenoid	B52	18 mm	**8033486**	**VSVA-B-B52-Z-A2-1T1L**
	D	5/2-way valve, double solenoid, with dominant signal	D52	18 mm	**8033487**	**VSVA-B-D52-Z-A2-1T1L**
	B	5/3-way solenoid valve, Mid-position pressurised	P53U	18 mm	**8033490**	**VSVA-B-P53U-Z-A2-1T1L**
	G	5/3-way solenoid valve, mid-position closed	P53C	18 mm	**8033492**	**VSVA-B-P53C-Z-A2-1T1L**
	E	5/3-way solenoid valve, Mid-position exhausted	P53E	18 mm	**8033491**	**VSVA-B-P53E-Z-A2-1T1L**
	SA	5/3-way solenoid valve, mid-position exhausted, switching position 14 detenting, mechanical spring return	P53ED	18 mm	**8039183**	**VSVA-B-P53ED-Z-A2-1T1L**
	SE	5/3-way solenoid valve, mid-position exhausted, switching position 12 detenting, mechanical spring return	P53EP	18 mm	**8039192**	**VSVA-B-P53EP-Z-A2-1T1L**
	SB	5/3-way solenoid valve, mid-position 1x exhausted from 4 to 5, 1x pressurised from 1 to 2, switching position 14 detenting, same function in both switching positions: pressurised from 1 to 4 and exhausted from 2 to 3, reset via mechanical spring	P53AD	18 mm	**8039186**	**VSVA-B-P53AD-Z-A2-1T1L**
	SD	5/3-way solenoid valve, mid-position 1x exhausted from 2 to 3, 1x pressurised from 1 to 4, switching position 14 detenting, same function in both switching positions: pressurised from 1 to 2 and exhausted from 4 to 5, reset via mechanical spring	P53BD	18 mm	**8040112**	**VSVA-B-P53BD-Z-A2-1T1L**
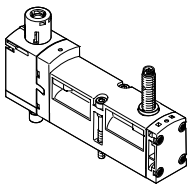	SS	5/2-way valve, single solenoid, mechanical spring return, inductive sensor with PNP output with 0.5 m connecting cable and 4-pin sensor push-in connector M12x1	M52-M	18 mm	**8033495**	**VSVA-B-M52-MZ-A2-1T1L-APX-0.5**
	SO	5/2-way valve, single solenoid, mechanical spring return, inductive sensor with PNP output and 3-pin sensor push-in connector M8x1	M52-M	18 mm	**8033496**	**VSVA-B-M52-MZ-A2-1T1L-APP**

Ordering data – Solenoid valve 24 V DC – for VTSA-F-CB

Ordering data – Solenoid valve VSVA with central plug, 3-pin, M12x1, round design

	Terminal code	Valve function	Valve code	Width	Part no.	Type
Solenoid valves, 24 V DC						
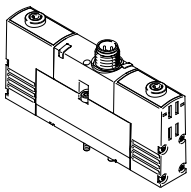	QN	2x 3/2-way valve, single solenoid, normally open	T32U	18 mm	**546775**	**VSVA-B-T32U-AZH-A2-1R5L**
	QK	2x 3/2-way valve, single solenoid, normally closed	T32C	18 mm	**546774**	**VSVA-B-T32C-AZH-A2-1R5L**
	QH	2x 3/2-way valve, single solenoid, 1x normally open, 1x normally closed	T32H	18 mm	**546776**	**VSVA-B-T32H-AZH-A2-1R5L**
	QM	5/2-way valve, single solenoid, pneumatic spring return	M52-A	18 mm	**546777**	**VSVA-B-M52-AZH-A2-1R5L**
	QO	5/2-way valve, single solenoid, reset via mechanical spring	M52-M	18 mm	**546778**	**VSVA-B-M52-MZH-A2-1R5L**
	QJ	5/2-way valve, double solenoid	B52	18 mm	**546779**	**VSVA-B-B52-ZH-A2-1R5L**
	QD	5/2-way valve, double solenoid, with dominant signal	D52	18 mm	**546780**	**VSVA-B-D52-ZH-A2-1R5L**
	QB	5/3-way solenoid valve, Mid-position pressurised	P53U	18 mm	**546783**	**VSVA-B-P53U-ZH-A2-1R5L**
	QG	5/3-way solenoid valve, mid-position closed	P53C	18 mm	**546781**	**VSVA-B-P53C-ZH-A2-1R5L**
	QE	5/3-way solenoid valve, Mid-position exhausted	P53E	18 mm	**546782**	**VSVA-B-P53E-ZH-A2-1R5L**

Note

Additional information about solenoid valves with central plug can be found in the existing catalogue documentation at:
www.festo.com/catalogue/... ➔ Support Portal:
Standards-based valve VSVA to ISO 15407-1 and ISO 5599-1 with M8 or M12 central plug

Datasheet – Solenoid valve width 26 mm

- Valve width
  to ISO 15407-2
  26 mm

- Voltage
  24 V DC

- Flow rate
  Valve width 26 mm:
  VTSA up to 1100 l/min
  VTSA-F up to 1350 l/min
  VTSA-F-CB up to 1350 l/min

Safety characteristics for valve		
Conforms to		EN 13849-1/2
CE marking (see declaration of conformity)	Direct voltage 24 V DC	To EU EMC Directive [1] (solenoid valves with sensor only)
Shock resistance		Shock test with severity level 2, to EN 60068-2-27
Vibration resistance		Transport application test with severity level 2, to EN 60068-2-6

1) For information about the area of use, see the EC declaration of conformity at: www.festo.com/catalogue/... → Support/Downloads.
If the devices are subject to usage restrictions in residential, commercial or light-industrial environments, further measures for the reduction of the emitted interference may be necessary.

Safety characteristics for valve, 24 V DC

Valve function (with valve code)	Terminal code	Test pulses	
		Max. positive test pulse with logic 0 [µs]	Max. negative test pulse with logic 1 [µs]
5/2-way, double solenoid (B52)	J	1200	1100
5/2-way, double solenoid with dominant signal (D52)	D	1200	1100
5/2-way, single solenoid (M52-A)	M	1200	1100
5/2-way, single solenoid (M52-M)	O	1200	1100
5/3-way, closed (P53C)	G	1200	1100
5/3-way, exhausted (P53E)	E	1200	1100
5/3-way, pressurised (P53U)	B	1200	1100
5/3-way, exhausted, switching position 14 detenting (P53ED)	SA	1200	1100
5/3-way, exhausted, switching position 12 detenting (P53EP)	SE	1200	1100
5/3-way, port 2 pressurised, 4 exhausted, switching position 14 detenting (P53AD)	SB	1200	1100
5/3-way, port 4 pressurised, 2 exhausted, switching position 14 detenting (P53BD)	SD	1200	1100
2x3/2-way, single solenoid, closed (T32C)	K	1500	1200
2x3/2-way, single solenoid, open (T32U)	N	1500	1200
2x3/2-way, single solenoid, open/closed (T32H)	H	1500	1200
2x3/2-way, single solenoid, closed (T32N)	Q	1500	1200
2x3/2-way, single solenoid, open (T32F)	P	1500	1200
2x3/2-way, single solenoid, open/closed (T32W)	R	1500	1200
2x2/2-way, single solenoid, closed (T22C)	VC	1500	1200
2x2/2-way, single solenoid, closed (T22CV)	VV	1500	1200

Datasheet – Solenoid valve width 26 mm

Datasheet for valve Valve function (with valve code)	Terminal code	Flow direction			Reset method		Weight [g]
		Any	Reversible only	Not reversible	Pneumatic spring	Mechanical spring	
5/2-way, double solenoid (B52)	J	■	–	–	–	–	276
5/2-way, double solenoid with dominant signal (D52)	D	■	–	–	–	–	276
5/2-way, single solenoid (M52-A)	M	■	–	–	■	–	293
5/2-way, single solenoid (M52-M)	O	■	–	–	–	■	293
5/3-way, closed[1] (P53C)	G	■	–	–	–	■	320
5/3-way, exhausted[1] (P53E)	E	■	–	–	–	■	320
5/3-way, pressurised[1] (P53U)	B	■	–	–	–	■	320
5/3-way, exhausted, switching position 14 detenting (P53ED)	SA	–	–	■	–	■	291
5/3-way, exhausted, switching position 12 detenting (P53EP)	SE	–	–	■	–	■	291
5/3-way, port 2 pressurised, 4 exhausted, switching position 14 detenting (P53AD)	SB	■	–	–	–	■	301
5/3-way, port 4 pressurised, 2 exhausted, switching position 14 detenting (P53BD)	SD	–	–	■	–	■	301
2x3/2-way, single solenoid, closed (T32C)	K	–	–	■	■	–	335
2x3/2-way, single solenoid, open (T32U)	N	–	–	■	■	–	335
2x3/2-way, single solenoid, open/closed (T32H)	H	–	–	■	■	–	335
2x3/2-way, single solenoid, closed (T32N)	Q	–	■	–	■	–	335
2x3/2-way, single solenoid, open (T32F)	P	–	■	–	■	–	335
2x3/2-way, single solenoid, open/closed (T32W)	R	–	■	–	■	–	335
2x2/2-way, single solenoid, closed (T22C)	VC	–	–	■	■	–	335
2x2/2-way, single solenoid, closed (T22CV)	VV	■	–	–	■	–	335

1) If neither solenoid coil is energised, the valve is moved to its mid-position by spring force.
If both solenoid coils are energised at the same time, the valve remains in the previously assumed switching position.

Datasheet – Solenoid valve width 26 mm

Standard nominal flow rate of valve/valve terminal [l/min]						
Valve function (with valve code)	Terminal code	Flow rate				
		Valve	Valve on valve terminal			Valve on individual sub-base
			VTSA	VTSA-F	VTSA-F-CB	
5/2-way, double solenoid (B52)	J	1400	1100	1350	1350	1200
5/2-way, double solenoid with dominant signal (D52)	D	1400	1100	1350	1350	1200
5/2-way, single solenoid (M52-A)	M	1400	1100	1350	1350	1200
5/2-way, single solenoid (M52-M)	O	1400	1100	1350	1350	1200
5/3-way, closed (P53C)	G	1400[1)] 700[2)]	1000[1)] 700[2)]	1350[1)] 700[2)]	1350[1)] 700[2)]	1200[1)] 700[2)]
5/3-way, exhausted (P53E)	E	1400[1)] 700[2)]	1000[1)] 700[2)]	1350[1)] 700[2)]	1350[1)] 700[2)]	1200[1)] 700[2)]
5/3-way, pressurised (P53U)	B	1400[1)] 700[2)]	1000[1)] 700[2)]	1350[1)] 700[2)]	1350[1)] 700[2)]	1200[1)] 700[2)]
5/3-way, exhausted, switching position 14 detenting (P53ED)	SA	1400[1)] 700[2)]	1000[1)] 700[2)]	1350[1)] 700[2)]	1350[1)] 700[2)]	1200[1)] 700[2)]
5/3-way, exhausted, switching position 12 detenting (P53EP)	SE	1400[1)] 700[2)]	1000[1)] 700[2)]	1350[1)] 700[2)]	1350[1)] 700[2)]	1200[1)] 700[2)]
5/3-way, port 2 pressurised, 4 exhausted, switching position 14 detenting (P53AD)	SB	700[1)] 700[2)]	700[1)] 700[2)]	700[1)] 700[2)]	700[1)] 700[2)]	700[1)] 700[2)]
5/3-way, port 4 pressurised, 2 exhausted, switching position 14 detenting (P53BD)	SD	–	850[1)] 820[2)]	950[1)] 860[2)]	950[1)] 860[2)]	900[1)] 840[2)]
2x3/2-way, single solenoid, closed (T32C)	K	1250	900	1150	1150	1100
2x3/2-way, single solenoid, open (T32U)	N	1250	900	1150	1150	1100
2x3/2-way, single solenoid, open/closed (T32H)	H	1250	900	1150	1150	1100
2x3/2-way, single solenoid, closed (T32N)	Q	1250	900	1150	1150	1100
2x3/2-way, single solenoid, open (T32F)	P	1250	900	1150	1150	1100
2x3/2-way, single solenoid, open/closed (T32W)	R	1250	900	1150	1150	1100
2x2/2-way, single solenoid, closed (T22C)	VC	1350	1000	1300	1300	1100
2x2/2-way, single solenoid, closed (T22CV)	VV	1350	1000	1300	1300	1100

1) Switching position
2) Mid-position

Note

The solenoid valves VSVA-B-P53BD...-A1-1T1L (terminal code SD) can be operated without restrictions at an operating pressure of less than 6 bar. At an operating pressure of more than 6 bar, the actual flow rate must not exceed 1900 l/min (e.g. 10-->2 bar) or these solenoid valves may switch unintentionally (to the mid-position or switching position 14).
At pressures above 6 bar, it is possible to prevent the flow rate from becoming too high by using a flow control valve or orifice (e.g. a reducing nipple on port 2 or 4 from G1/4 to G1/8).

Datasheet – Solenoid valve width 26 mm

Valve switching times in [ms] Valve function (with valve code)	Terminal code	On	Off	Changeover
5/2-way, double solenoid (B52)	J	–	–	18
5/2-way, double solenoid with dominant signal (D52)	D	–	–	21
5/2-way, single solenoid (M52-A)	M	25	45	–
5/2-way, single solenoid (M52-M)	O	20	65	–
5/3-way, closed (P53C)	G	22	65	–
5/3-way, exhausted (P53E)	E	22	65	–
5/3-way, pressurised (P53U)	B	22	65	–
5/3-way, exhausted, switching position 14 detenting (P53ED)	SA	22 for control side 12 9 for control side 14	49 for control side 12	33
5/3-way, exhausted, switching position 12 detenting (P53EP)	SE	10 for control side 12 22 for control side 14	50 for control side 14	40
5/3-way, port 2 pressurised, 4 exhausted, switching position 14 detenting (P53AD)	SB	19 for control side 12 9 for control side 14	36 for control side 12	32
5/3-way, port 4 pressurised, 2 exhausted, switching position 14 detenting (P53BD)	SD	16 for control side 12 9 for control side 14	26 for control side 12 36 for control side 14	–
2x3/2-way, single solenoid, closed (T32C)	K	20	38	–
2x3/2-way, single solenoid, open (T32U)	N	20	38	–
2x3/2-way, single solenoid, open/closed (T32H)	H	20	38	–
2x3/2-way, single solenoid, closed (T32N)	Q	32	30	–
2x3/2-way, single solenoid, open (T32F)	P	32	30	–
2x3/2-way, single solenoid, open/closed (T32W)	R	32	30	–
2x2/2-way, single solenoid, closed (T22C)	VC	20	38	–
2x2/2-way, single solenoid, closed (T22CV)	VV	20	38	–

Characteristic coil data Valve function (with valve code)	Terminal code	Characteristic coil data at 24 V DC in [W]
5/2-way, double solenoid (B52)	J	1.6
5/2-way, double solenoid with dominant signal (D52)	D	1.3
5/2-way, single solenoid (M52-A)	M	1.6
5/2-way, single solenoid (M52-M)	O	1.6
5/3-way, closed (P53C)	G	1.6
5/3-way, exhausted (P53E)	E	1.6
5/3-way, pressurised (P53U)	B	1.6
5/3-way, exhausted, switching position 14 detenting (P53ED)	SA	1.6
5/3-way, exhausted, switching position 12 detenting (P53EP)	SE	1.6
5/3-way, port 2 pressurised, 4 exhausted, switching position 14 detenting (P53AD)	SB	1.6
5/3-way, port 4 pressurised, 2 exhausted, switching position 14 detenting (P53BD)	SD	1.6
2x3/2-way, single solenoid, closed (T32C)	K	1.3
2x3/2-way, single solenoid, open (T32U)	N	1.3
2x3/2-way, single solenoid, open/closed (T32H)	H	1.3
2x3/2-way, single solenoid, closed (T32N)	Q	1.3
2x3/2-way, single solenoid, open (T32F)	P	1.3
2x3/2-way, single solenoid, open/closed (T32W)	R	1.3
2x2/2-way, single solenoid, closed (T22C)	VC	1.3
2x2/2-way, single solenoid, closed (T22CV)	VV	1.3

Materials	
Housing	Die-cast aluminium, PA
Seals	FPM, NBR, HNBR
Screws	Galvanised steel
Note on materials	RoHS-compliant

Ordering data – Solenoid valve 24 V DC

Ordering data – Solenoid valve VSVA, MO non-detenting/detenting (D)

	Terminal code	Valve function	Valve code	Width	Part no.	Type
Solenoid valves, 24 V DC						
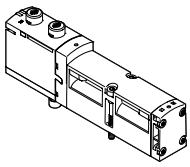	VC	2x 2/2-way valve, single solenoid, normally closed, pneumatic spring return	T22C	26 mm	**561149**	**VSVA-B-T22C-AZD-A1-1T1L**
	VV	2x 2/2-way valve, single solenoid, normally closed, pneumatic spring return, vacuum operation possible at 3 and 5	T22CV	26 mm	**561153**	**VSVA-B-T22CV-AZD-A1-1T1L**
	N	2x 3/2-way valve, single solenoid, normally open	T32U	26 mm	**539152**	**VSVA-B-T32U-AZD-A1-1T1L**
	K	2x 3/2-way valve, single solenoid, normally closed	T32C	26 mm	**539150**	**VSVA-B-T32C-AZD-A1-1T1L**
	H	2x 3/2-way valve, single solenoid, 1x normally open, 1x normally closed	T32H	26 mm	**539154**	**VSVA-B-T32H-AZD-A1-1T1L**
	P	2x 3/2-way valve, single solenoid, reverse operation, normally open	T32F	26 mm	**539153**	**VSVA-B-T32F-AZD-A1-1T1L**
	Q	2x 3/2-way valve, single solenoid, reverse operation, normally closed	T32N	26 mm	**539151**	**VSVA-B-T32N-AZD-A1-1T1L**
	R	2x 3/2-way valve, single solenoid, reverse operation, 1x normally open, 1x normally closed	T32W	26 mm	**539155**	**VSVA-B-T32W-AZD-A1-1T1L**
	M	5/2-way valve, single solenoid, pneumatic spring return	M52-A	26 mm	**539158**	**VSVA-B-M52-AZD-A1-1T1L**
	O	5/2-way valve, single solenoid, reset via mechanical spring	M52-M	26 mm	**539159**	**VSVA-B-M52-MZD-A1-1T1L**
	J	5/2-way valve, double solenoid	B52	26 mm	**539156**	**VSVA-B-B52-ZD-A1-1T1L**
	D	5/2-way valve, double solenoid, with dominant signal	D52	26 mm	**539157**	**VSVA-B-D52-ZD-A1-1T1L**
	B	5/3-way solenoid valve, Mid-position pressurised	P53U	26 mm	**539160**	**VSVA-B-P53U-ZD-A1-1T1L**
	G	5/3-way solenoid valve, mid-position closed	P53C	26 mm	**539162**	**VSVA-B-P53C-ZD-A1-1T1L**
	E	5/3-way solenoid valve, Mid-position exhausted	P53E	26 mm	**539161**	**VSVA-B-P53E-ZD-A1-1T1L**
	SA	5/3-way solenoid valve, mid-position exhausted, switching position 14 detenting, mechanical spring return	P53ED	26 mm	**560727**	**VSVA-B-P53ED-ZD-A1-1T1L**
	SE	5/3-way solenoid valve, mid-position exhausted, switching position 12 detenting, mechanical spring return	P53EP	26 mm	**8026638**	**VSVA-B-P53EP-ZD-A1-1T1L**
	SB	5/3-way solenoid valve, mid-position 1x exhausted from 4 to 5, 1x pressurised from 1 to 2, switching position 14 detenting, same function in both switching positions: pressurised from 1 to 4 and exhausted from 2 to 3, reset via mechanical spring	P53AD	26 mm	**560728**	**VSVA-B-P53AD-ZD-A1-1T1L**
	SD	5/3-way solenoid valve, mid-position 1x exhausted from 2 to 3, 1x pressurised from 1 to 4, switching position 14 detenting, same function in both switching positions: pressurised from 1 to 2 and exhausted from 4 to 5, reset via mechanical spring	P53BD	26 mm	**8031816**	**VSVA-B-P53BD-ZD-A1-1T1L**
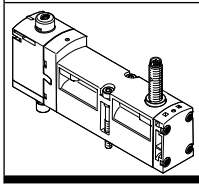	SS	5/2-way valve, single solenoid, mechanical spring return, inductive sensor with PNP output with 0.5 m connecting cable and 4-pin sensor push-in connector M12x1	M52-M	26 mm	**570850**	**VSVA-B-M52-MZD-A1-1T1L-APX-0.5**
	SO	5/2-way valve, single solenoid, mechanical spring return, inductive sensor with PNP output and 3-pin sensor push-in connector M8x1	M52-M	26 mm	**560724**	**VSVA-B-M52-MZD-A1-1T1L-APP**

Ordering data – Solenoid valve 24 V DC

Ordering data – Solenoid valve VSVA with cover cap for MO non-detenting/heavy duty, detenting via accessory (TR)

	Terminal code	Valve function	Valve code	Width	Part no.	Type
Solenoid valves, 24 V DC						
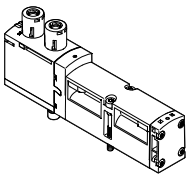	VC	2x 2/2-way valve, single solenoid, normally closed, pneumatic spring return	T22C	26 mm	**8033032**	**VSVA-B-T22C-AZTR-A1-1T1L**
	VV	2x 2/2-way valve, single solenoid, normally closed, pneumatic spring return, vacuum operation possible at 3 and 5	T22CV	26 mm	**8033033**	**VSVA-B-T22CV-AZTR-A1-1T1L**
	N	2x 3/2-way valve, single solenoid, normally open	T32U	26 mm	**8033015**	**VSVA-B-T32U-AZTR-A1-1T1L**
	K	2x 3/2-way valve, single solenoid, normally closed	T32C	26 mm	**8033013**	**VSVA-B-T32C-AZTR-A1-1T1L**
	H	2x 3/2-way valve, single solenoid, 1x normally open, 1x normally closed	T32H	26 mm	**8033017**	**VSVA-B-T32H-AZTR-A1-1T1L**
	P	2x 3/2-way valve, single solenoid, reverse operation, normally open	T32F	26 mm	**8033016**	**VSVA-B-T32F-AZTR-A1-1T1L**
	Q	2x 3/2-way valve, single solenoid, reverse operation, normally closed	T32N	26 mm	**8033014**	**VSVA-B-T32N-AZTR-A1-1T1L**
	R	2x 3/2-way valve, single solenoid, reverse operation, 1x normally open, 1x normally closed	T32W	26 mm	**8033018**	**VSVA-B-T32W-AZTR-A1-1T1L**
	M	5/2-way valve, single solenoid, pneumatic spring return	M52-A	26 mm	**8033021**	**VSVA-B-M52-AZTR-A1-1T1L**
	O	5/2-way valve, single solenoid, reset via mechanical spring	M52-M	26 mm	**8033022**	**VSVA-B-M52-MZTR-A1-1T1L**
	J	5/2-way valve, double solenoid	B52	26 mm	**8033019**	**VSVA-B-B52-ZTR-A1-1T1L**
	D	5/2-way valve, double solenoid, with dominant signal	D52	26 mm	**8033020**	**VSVA-B-D52-ZTR-A1-1T1L**
	B	5/3-way solenoid valve, Mid-position pressurised	P53U	26 mm	**8033023**	**VSVA-B-P53U-ZTR-A1-1T1L**
	G	5/3-way solenoid valve, mid-position closed	P53C	26 mm	**8033025**	**VSVA-B-P53C-ZTR-A1-1T1L**
	E	5/3-way solenoid valve, Mid-position exhausted	P53E	26 mm	**8033024**	**VSVA-B-P53E-ZTR-A1-1T1L**
	SA	5/3-way solenoid valve, mid-position exhausted, switching position 14 detenting, mechanical spring return	P53ED	26 mm	**8033028**	**VSVA-B-P53ED-ZTR-A1-1T1L**
	SE	5/3-way solenoid valve, mid-position exhausted, switching position 12 detenting, mechanical spring return	P53EP	26 mm	**8033035**	**VSVA-B-P53EP-ZTR-A1-1T1L**
	SB	5/3-way solenoid valve, mid-position 1x exhausted from 4 to 5, 1x pressurised from 1 to 2, switching position 14 detenting, same function in both switching positions: pressurised from 1 to 4 and exhausted from 2 to 3, reset via mechanical spring	P53AD	26 mm	**8033029**	**VSVA-B-P53AD-ZTR-A1-1T1L**
	SD	5/3-way solenoid valve, mid-position 1x exhausted from 2 to 3, 1x pressurised from 1 to 4, switching position 14 detenting, same function in both switching positions: pressurised from 1 to 2 and exhausted from 4 to 5, reset via mechanical spring	P53BD	26 mm	**8039187**	**VSVA-B-P53BD-ZTR-A1-1T1L**
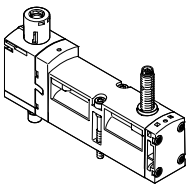	SS	5/2-way valve, single solenoid, mechanical spring return, inductive sensor with PNP output with 0.5 m connecting cable and 4-pin sensor push-in connector M12x1	M52-M	26 mm	**8033034**	**VSVA-B-M52-MZTR-A1-1T1L-APX-0.5**
	SO	5/2-way valve, single solenoid, mechanical spring return, inductive sensor with PNP output and 3-pin sensor push-in connector M8x1	M52-M	26 mm	**8033027**	**VSVA-B-M52-MZTR-A1-1T1L-APP**

Ordering data – Solenoid valve 24 V DC

Ordering data – Solenoid valve VSVA with cover cap for MO, non-detenting (H)

	Terminal code	Valve function	Valve code	Width	Part no.	Type
Solenoid valves, 24 V DC						
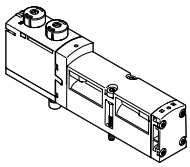	VC	2x 2/2-way valve, single solenoid, normally closed, pneumatic spring return	T22C	26 mm	**8033055**	**VSVA-B-T22C-AZH-A1-1T1L**
	VV	2x 2/2-way valve, single solenoid, normally closed, pneumatic spring return, vacuum operation possible at 3 and 5	T22CV	26 mm	**8033056**	**VSVA-B-T22CV-AZH-A1-1T1L**
	N	2x 3/2-way valve, single solenoid, normally open	T32U	26 mm	**8033038**	**VSVA-B-T32U-AZH-A1-1T1L**
	K	2x 3/2-way valve, single solenoid, normally closed	T32C	26 mm	**8033036**	**VSVA-B-T32C-AZH-A1-1T1L**
	H	2x 3/2-way valve, single solenoid, 1x normally open, 1x normally closed	T32H	26 mm	**8033040**	**VSVA-B-T32H-AZH-A1-1T1L**
	P	2x 3/2-way valve, single solenoid, reverse operation, normally open	T32F	26 mm	**8033039**	**VSVA-B-T32F-AZH-A1-1T1L**
	Q	2x 3/2-way valve, single solenoid, reverse operation, normally closed	T32N	26 mm	**8033037**	**VSVA-B-T32N-AZH-A1-1T1L**
	R	2x 3/2-way valve, single solenoid, reverse operation, 1x normally open, 1x normally closed	T32W	26 mm	**8033041**	**VSVA-B-T32W-AZH-A1-1T1L**
	M	5/2-way valve, single solenoid, pneumatic spring return	M52-A	26 mm	**8033044**	**VSVA-B-M52-AZH-A1-1T1L**
	O	5/2-way valve, single solenoid, reset via mechanical spring	M52-M	26 mm	**8033045**	**VSVA-B-M52-MZH-A1-1T1L**
	J	5/2-way valve, double solenoid	B52	26 mm	**8033042**	**VSVA-B-B52-ZH-A1-1T1L**
	D	5/2-way valve, double solenoid, with dominant signal	D52	26 mm	**8033043**	**VSVA-B-D52-ZH-A1-1T1L**
	B	5/3-way solenoid valve, Mid-position pressurised	P53U	26 mm	**8033046**	**VSVA-B-P53U-ZH-A1-1T1L**
	G	5/3-way solenoid valve, mid-position closed	P53C	26 mm	**8033048**	**VSVA-B-P53C-ZH-A1-1T1L**
	E	5/3-way solenoid valve, Mid-position exhausted	P53E	26 mm	**8033047**	**VSVA-B-P53E-ZH-A1-1T1L**
	SA	5/3-way solenoid valve, mid-position exhausted, switching position 14 detenting, mechanical spring return	P53ED	26 mm	**8033051**	**VSVA-B-P53ED-ZH-A1-1T1**
	SE	5/3-way solenoid valve, mid-position exhausted, switching position 12 detenting, mechanical spring return	P53EP	26 mm	**8033058**	**VSVA-B-P53EP-ZH-A1-1T1L**
	SB	5/3-way solenoid valve, mid-position 1x exhausted from 4 to 5, 1x pressurised from 1 to 2, switching position 14 detenting, same function in both switching positions: pressurised from 1 to 4 and exhausted from 2 to 3, reset via mechanical spring	P53AD	26 mm	**8033052**	**VSVA-B-P53AD-ZH-A1-1T1L**
	SD	5/3-way solenoid valve, mid-position 1x exhausted from 2 to 3, 1x pressurised from 1 to 4, switching position 14 detenting, same function in both switching positions: pressurised from 1 to 2 and exhausted from 4 to 5, reset via mechanical spring	P53BD	26 mm	**8039188**	**VSVA-B-P53BD-ZH-A1-1T1L**
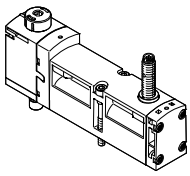	SS	5/2-way valve, single solenoid, mechanical spring return, inductive sensor with PNP output with 0.5 m connecting cable and 4-pin sensor push-in connector M12x1	M52-M	26 mm	**8033057**	**VSVA-B-M52-MZH-A1-1T1L-APX-0.5**
	SO	5/2-way valve, single solenoid, mechanical spring return, inductive sensor with PNP output and 3-pin sensor push-in connector M8x1	M52-M	26 mm	**8033050**	**VSVA-B-M52-MZH-A1-1T1L-APP**

Ordering data – Solenoid valve 24 V DC

Ordering data – Solenoid valve VSVA with cover cap for MO, concealed

	Terminal code	Valve function	Valve code	Width	Part no.	Type
Solenoid valves, 24 V DC						
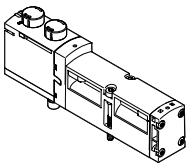	VC	2x 2/2-way valve, single solenoid, normally closed, pneumatic spring return	T22C	26 mm	**8033078**	**VSVA-B-T22C-AZ-A1-1T1L**
	VV	2x 2/2-way valve, single solenoid, normally closed, pneumatic spring return, vacuum operation possible at 3 and 5	T22CV	26 mm	**8033079**	**VSVA-B-T22CV-AZ-A1-1T1L**
	N	2x 3/2-way valve, single solenoid, normally open	T32U	26 mm	**8033061**	**VSVA-B-T32U-AZ-A1-1T1L**
	K	2x 3/2-way valve, single solenoid, normally closed	T32C	26 mm	**8033059**	**VSVA-B-T32C-AZ-A1-1T1L**
	H	2x 3/2-way valve, single solenoid, 1x normally open, 1x normally closed	T32H	26 mm	**8033063**	**VSVA-B-T32H-AZ-A1-1T1L**
	P	2x 3/2-way valve, single solenoid, reverse operation, normally open	T32F	26 mm	**8033062**	**VSVA-B-T32F-AZ-A1-1T1L**
	Q	2x 3/2-way valve, single solenoid, reverse operation, normally closed	T32N	26 mm	**8033060**	**VSVA-B-T32N-AZ-A1-1T1L**
	R	2x 3/2-way valve, single solenoid, reverse operation, 1x normally open, 1x normally closed	T32W	26 mm	**8033064**	**VSVA-B-T32W-AZ-A1-1T1L**
	M	5/2-way valve, single solenoid, pneumatic spring return	M52-A	26 mm	**8033067**	**VSVA-B-M52-AZ-A1-1T1L**
	O	5/2-way valve, single solenoid, reset via mechanical spring	M52-M	26 mm	**8033068**	**VSVA-B-M52-MZ-A1-1T1L**
	J	5/2-way valve, double solenoid	B52	26 mm	**8033065**	**VSVA-B-B52-Z-A1-1T1L**
	D	5/2-way valve, double solenoid, with dominant signal	D52	26 mm	**8033066**	**VSVA-B-D52-Z-A1-1T1L**
	B	5/3-way solenoid valve, Mid-position pressurised	P53U	26 mm	**8033069**	**VSVA-B-P53U-Z-A1-1T1L**
	G	5/3-way solenoid valve, mid-position closed	P53C	26 mm	**8033071**	**VSVA-B-P53C-Z-A1-1T1L**
	E	5/3-way solenoid valve, Mid-position exhausted	P53E	26 mm	**8033070**	**VSVA-B-P53E-Z-A1-1T1L**
	SA	5/3-way solenoid valve, mid-position exhausted, switching position 14 detenting, mechanical spring return	P53ED	26 mm	**8033074**	**VSVA-B-P53ED-Z-A1-1T1L**
	SE	5/3-way solenoid valve, mid-position exhausted, switching position 12 detenting, mechanical spring return	P53EP	26 mm	**8033081**	**VSVA-B-P53EP-Z-A1-1T1L**
	SB	5/3-way solenoid valve, mid-position 1x exhausted from 4 to 5, 1x pressurised from 1 to 2, switching position 14 detenting, same function in both switching positions: pressurised from 1 to 4 and exhausted from 2 to 3, reset via mechanical spring	P53AD	26 mm	**8033075**	**VSVA-B-P53AD-Z-A1-1T1L**
	SD	5/3-way solenoid valve, mid-position 1x exhausted from 2 to 3, 1x pressurised from 1 to 4, switching position 14 detenting, same function in both switching positions: pressurised from 1 to 2 and exhausted from 4 to 5, reset via mechanical spring	P53BD	26 mm	**8039189**	**VSVA-B-P53BD-Z-A1-1T1L**
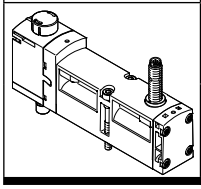	SS	5/2-way valve, single solenoid, mechanical spring return, inductive sensor with PNP output with 0.5 m connecting cable and 4-pin sensor push-in connector M12x1	M52-M	26 mm	**8033080**	**VSVA-B-M52-MZ-A1-1T1L-APX-0.5**
	SO	5/2-way valve, single solenoid, mechanical spring return, inductive sensor with PNP output and 3-pin sensor push-in connector M8x1	M52-M	26 mm	**8033073**	**VSVA-B-M52-MZ-A1-1T1L-APP**

Ordering data – Solenoid valve 24 V DC – for VTSA-F-CB

Ordering data – Solenoid valve VSVA with central plug, 3-pin, M12x1, round design						
	Terminal code	Valve function	Valve code	Width	Part no.	Type
Solenoid valves, 24 V DC						
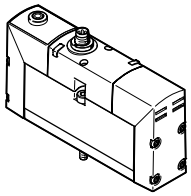	QN	2x 3/2-way valve, single solenoid, normally open	T32U	26 mm	**534543**	**VSVA-B-T32U-AZH-A1-1R5L**
	QK	2x 3/2-way valve, single solenoid, normally closed	T32C	26 mm	**534542**	**VSVA-B-T32C-AZH-A1-1R5L**
	QH	2x 3/2-way valve, single solenoid, 1x normally open, 1x normally closed	T32H	26 mm	**534544**	**VSVA-B-T32H-AZH-A1-1R5L**
	QM	5/2-way valve, single solenoid, pneumatic spring return	M52-A	26 mm	**534545**	**VSVA-B-M52-AZH-A1-1R5L**
	QO	5/2-way valve, single solenoid, reset via mechanical spring	M52-M	26 mm	**534546**	**VSVA-B-M52-MZH-A1-1R5L**
	QJ	5/2-way valve, double solenoid	B52	26 mm	**534547**	**VSVA-B-B52-ZH-A1-1R5L**
	QD	5/2-way valve, double solenoid, with dominant signal	D52	26 mm	**534548**	**VSVA-B-D52-ZH-A1-1R5L**
	QB	5/3-way solenoid valve, Mid-position pressurised	P53U	26 mm	**534551**	**VSVA-B-P53U-ZH-A1-1R5L**
	QG	5/3-way solenoid valve, mid-position closed	P53C	26 mm	**534549**	**VSVA-B-P53C-ZH-A1-1R5L**
	QE	5/3-way solenoid valve, Mid-position exhausted	P53E	26 mm	**534550**	**VSVA-B-P53E-ZH-A1-1R5L**

Note

Additional information about solenoid valves with central plug can be found in the existing catalogue documentation at:
www.festo.com/catalogue/... → Support Portal:
Standards-based valve VSVA to ISO 15407-1 and ISO 5599-1 with M8 or M12 central plug

Datasheet – Solenoid valve width 42 mm

- Valve width
  to ISO 5599-2
  42 mm (ISO 1)

- Voltage
  24 V DC

- Flow rate
  Valve width 42 mm:
  VTSA up to 1300 l/min
  VTSA-F up to 1860 l/min
  VTSA-F-CB up to 1860 l/min

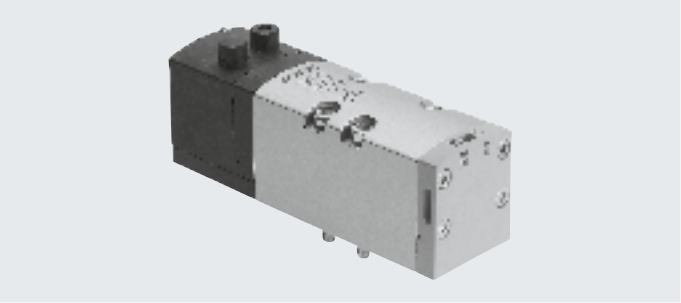

Safety characteristics for valve	
Conforms to	EN 13849-1/2
Shock resistance	Shock test with severity level 2, to EN 60068-2-27
Vibration resistance	Transport application test with severity level 2, to EN 60068-2-6

Safety characteristics for valve, 24 V DC

Valve function (with valve code)	Terminal code	Test pulses	
		Max. positive test pulse with 0 signal [µs]	Max. negative test pulse with 1 signal [µs]
5/2-way, double solenoid (B52)	J	1400	900
5/2-way, double solenoid with dominant signal (D52)	D	1600	1100
5/2-way, single solenoid (M52-A)	M	1400	900
5/2-way, single solenoid (M52-M)	O	1400	900
5/3-way, closed (P53C)	G	1400	900
5/3-way, exhausted (P53E)	E	1400	900
5/3-way, pressurised (P53U)	B	1400	900
5/3-way, pressurised 1 to 2, 4 to 5 closed (P53F)	VG	–	–
2x3/2-way, single solenoid, closed (T32C)	K	1600	1100
2x3/2-way, single solenoid, open (T32U)	N	1600	1100
2x3/2-way, single solenoid, open/closed (T32H)	H	1600	1100
2x3/2-way, single solenoid, closed (T32N)	Q	1600	1100
2x3/2-way, single solenoid, open (T32F)	P	1600	1100
2x3/2-way, single solenoid, open/closed (T32W)	R	1600	1100
2x2/2-way, single solenoid, closed (T22C)	VC	1600	1100
2x2/2-way, single solenoid, closed (T22CV)	VV	1600	1100

Datasheet – Solenoid valve width 42 mm

Datasheet for valve Valve function (with valve code)	Terminal code	Flow direction			Reset method		Weight [g]
		Any	Reversible only	Not reversible	Pneumatic spring	Mechanical spring	
5/2-way, double solenoid (B52)	J	■	–	–	–	–	439
5/2-way, double solenoid with dominant signal (D52)	D	■	–	–	–	–	439
5/2-way, single solenoid (M52-A)	M	■	–	–	■	–	426
5/2-way, single solenoid (M52-M)	O	■	–	–	–	■	426
5/3-way, closed[1] (P53C)	G	■	–	–	–	■	456
5/3-way, exhausted[1] (P53E)	E	■	–	–	–	■	456
5/3-way, pressurised[1] (P53U)	B	■	–	–	–	■	456
5/3-way, pressurised 1 to 2, 4 to 5 closed (P53F)	VG	■	–	–	–	–	456
2x3/2-way, single solenoid, closed (T32C)	K	–	–	■	■	–	442
2x3/2-way, single solenoid, open (T32U)	N	–	–	■	■	–	442
2x3/2-way, single solenoid, open/closed (T32H)	H	–	–	■	■	–	442
2x3/2-way, single solenoid, closed (T32N)	Q	–	■	–	■	–	442
2x3/2-way, single solenoid, open (T32F)	P	–	■	–	■	–	442
2x3/2-way, single solenoid, open/closed (T32W)	R	–	■	–	■	–	442
2x2/2-way, single solenoid, closed (T22C)	VC	–	–	■	■	–	442
2x2/2-way, single solenoid, closed (T22CV)	VV	■	–	–	■	–	442

1) If neither solenoid coil is energised, the valve is moved to its mid-position by spring force.
If both solenoid coils are energised at the same time, the valve remains in the previously assumed switching position.

Standard nominal flow rate of valve/valve terminal [l/min] Valve function (with valve code)	Terminal code	Flow rate				
		Valve	Valve on valve terminal			Valve on individual sub-base
			VTSA	VTSA-F	VTSA-F-CB	
5/2-way, double solenoid (B52)	J	2000	1300	1860	1860	1500
5/2-way, double solenoid with dominant signal (D52)	D	2000	1300	1860	1860	1500
5/2-way, single solenoid (M52-A)	M	2000	1300	1860	1860	1500
5/2-way, single solenoid (M52-M)	O	2000	1300	1860	1860	1500
5/3-way, closed (P53C)	G	1900[1] 950[2]	1200[1] 800[2]	1690[1] 830[2]	1690[1] 830[2]	1400[1] 800[2]
5/3-way, exhausted (P53E)	E	1900[1] 950[2]	1200[1] 800[2]	1690[1] 830[2]	1690[1] 830[2]	1400[1] 800[2]
5/3-way, pressurised (P53U)	B	1900[1] 950[2]	1200[1] 800[2]	1690[1] 830[2]	1690[1] 830[2]	1400[1] 800[2]
5/3-way, pressurised 1 to 2, 4 to 5 closed (P53F)	VG	1700[1] 700[2]	1400[1] 800[2]	1700[1] 700[2]	1700[1] 700[2]	1400[1] 700[2]
2x3/2-way, single solenoid, closed (T32C)	K	1600	1200	1300	1300	1200
2x3/2-way, single solenoid, open (T32U)	N	1600	1200	1300	1300	1200
2x3/2-way, single solenoid, open/closed (T32H)	H	1600	1200	1300	1300	1200
2x3/2-way, single solenoid, closed (T32N)	Q	1600	1200	1300	1300	1200
2x3/2-way, single solenoid, open (T32F)	P	1600	1200	1300	1300	1200
2x3/2-way, single solenoid, open/closed (T32W)	R	1600	1200	1300	1300	1200
2x2/2-way, single solenoid, closed (T22C)	VC	1600	1400	1500	1500	1400
2x2/2-way, single solenoid, closed (T22CV)	VV	1600	1400	1500	1500	1400

1) Switching position
2) Mid-position

Datasheet – Solenoid valve width 42 mm

Valve switching times in [ms]				
Valve function (with valve code)	Terminal code	24 V DC		
		On	Off	Changeover
5/2-way, double solenoid (B52)	J	–	–	16
5/2-way, double solenoid with dominant signal (D52)	D	–	–	19
5/2-way, single solenoid (M52-A)	M	27	45	–
5/2-way, single solenoid (M52-M)	O	22	60	–
5/3-way, closed (P53C)	G	22	65	38
5/3-way, exhausted (P53E)	E	22	65	38
5/3-way, pressurised (P53U)	B	22	65	38
5/3-way, pressurised 1 to 2, 4 to 5 closed (P53F)	VG	22	65	38
2x3/2-way, single solenoid, closed (T32C)	K	20	38	–
2x3/2-way, single solenoid, open (T32U)	N	20	38	–
2x3/2-way, single solenoid, open/closed (T32H)	H	20	38	–
2x3/2-way, single solenoid, closed (T32N)	Q	34	28	–
2x3/2-way, single solenoid, open (T32F)	P	34	28	–
2x3/2-way, single solenoid, open/closed (T32W)	R	34	28	–
2x2/2-way, single solenoid, closed (T22C)	VC	20	38	–
2x2/2-way, single solenoid, closed (T22CV)	VV	20	38	–

Characteristic coil data		
Valve function (with valve code)	Terminal code	Characteristic coil data at 24 V DC in [W]
5/2-way, double solenoid (B52)	J	1.6
5/2-way, double solenoid with dominant signal (D52)	D	1.3
5/2-way, single solenoid (M52-A)	M	1.6
5/2-way, single solenoid (M52-M)	O	1.6
5/3-way, closed (P53C)	G	1.6
5/3-way, exhausted (P53E)	E	1.6
5/3-way, pressurised (P53U)	B	1.6
5/3-way, pressurised 1 to 2, 4 to 5 closed (P53F)	VG	1.6
2x3/2-way, single solenoid, closed (T32C)	K	1.3
2x3/2-way, single solenoid, open (T32U)	N	1.3
2x3/2-way, single solenoid, open/closed (T32H)	H	1.3
2x3/2-way, single solenoid, closed (T32N)	Q	1.3
2x3/2-way, single solenoid, open (T32F)	P	1.3
2x3/2-way, single solenoid, open/closed (T32W)	R	1.3
2x2/2-way, single solenoid, closed (T22C)	VC	1.3
2x2/2-way, single solenoid, closed (T22CV)	VV	1.3

Max. current consumption per solenoid coil			
Type		T22, T32	B52, D52, M52, P53
At nominal voltage 24 V DC (valves with holding current reduction)			
Nominal pick-up current	[mA]	60	72
Nominal current following current reduction	[mA]	–	–
Time until current reduction	[ms]	30	30

Materials	
Housing	Die-cast aluminium, PA
Seals	FPM, NBR, HNBR
Screws	Galvanised steel
Note on materials	RoHS-compliant

Ordering data – Solenoid valve 24 V DC

Ordering data – Solenoid valve VSVA, MO non-detenting/detenting (D)						
	Terminal code	Valve function	Valve code	Width	Part no.	Type
Solenoid valves, 24 V DC						
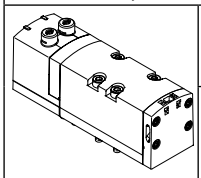	VC	2x 2/2-way valve, single solenoid, Normally closed, pneumatic spring return	T22C	42 mm	**561340**	**VSVA-B-T22C-AZD-D1-1T1L**
	VV	2x 2/2-way valve, single solenoid, normally closed, pneumatic spring return, vacuum operation possible at 3 and 5	T22CV	42 mm	**561344**	**VSVA-B-T22CV-AZD-D1-1T1L**
	N	2x 3/2-way valve, single solenoid, normally open	T32U	42 mm	**543692**	**VSVA-B-T32U-AZD-D1-1T1L**
	K	2x 3/2-way valve, single solenoid, normally closed	T32C	42 mm	**543690**	**VSVA-B-T32C-AZD-D1-1T1L**
	H	2x 3/2-way valve, single solenoid, 1x normally open, 1x normally closed	T32H	42 mm	**543694**	**VSVA-B-T32H-AZD-D1-1T1L**
	P	2x 3/2-way valve, single solenoid, reverse operation, normally open	T32F	42 mm	**543693**	**VSVA-B-T32F-AZD-D1-1T1L**
	Q	2x 3/2-way valve, single solenoid, reverse operation, normally closed	T32N	42 mm	**543691**	**VSVA-B-T32N-AZD-D1-1T1L**
	R	2x 3/2-way valve, single solenoid, reverse operation, 1x normally open, 1x normally closed	T32W	42 mm	**543695**	**VSVA-B-T32W-AZD-D1-1T1L**
	M	5/2-way valve, single solenoid, pneumatic spring return	M52-A	42 mm	**543698**	**VSVA-B-M52-AZD-D1-1T1L**
	O	5/2-way valve, single solenoid, reset via mechanical spring	M52-M	42 mm	**543699**	**VSVA-B-M52-MZD-D1-1T1L**
	J	5/2-way valve, double solenoid	B52	42 mm	**543696**	**VSVA-B-B52-ZD-D1-1T1L**
	D	5/2-way valve, double solenoid, with dominant signal	D52	42 mm	**543697**	**VSVA-B-D52-ZD-D1-1T1L**
	B	5/3-way solenoid valve, Mid-position pressurised	P53U	42 mm	**543700**	**VSVA-B-P53U-ZD-D1-1T1L**
	G	5/3-way solenoid valve, mid-position closed	P53C	42 mm	**543702**	**VSVA-B-P53C-ZD-D1-1T1L**
	E	5/3-way solenoid valve, Mid-position exhausted	P53E	42 mm	**543701**	**VSVA-B-P53E-ZD-D1-1T1L**
	VG	5/3-way solenoid valve, mid-position pressurised 1 to 2, 4 to 5 closed	P53F	42 mm	**8000464**	**VSVA-B-P53F-ZD-D1-1T1L**

Ordering data – Solenoid valve 24 V DC

Ordering data – Solenoid valve VSVA with cover cap for MO non-detenting/heavy duty, detenting via accessory (TR)						
	Terminal code	Valve function	Valve code	Width	Part no.	Type
Solenoid valves, 24 V DC						
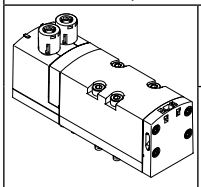	VC	2x 2/2-way valve, single solenoid, normally closed, pneumatic spring return	T22C	42 mm	**8034781**	**VSVA-B-T22C-AZTR-D1-1T1L**
	VV	2x 2/2-way valve, single solenoid, normally closed, pneumatic spring return, vacuum operation possible at 3 and 5	T22CV	42 mm	**8034782**	**VSVA-B-T22CV-AZTR-D1-1T1L**
	N	2x 3/2-way valve, single solenoid, normally open	T32U	42 mm	**8034770**	**VSVA-B-T32U-AZTR-D1-1T1L**
	K	2x 3/2-way valve, single solenoid, normally closed	T32C	42 mm	**8034768**	**VSVA-B-T32C-AZTR-D1-1T1L**
	H	2x 3/2-way valve, single solenoid, 1x normally open, 1x normally closed	T32H	42 mm	**8034772**	**VSVA-B-T32H-AZTR-D1-1T1L**
	P	2x 3/2-way valve, single solenoid, reverse operation, normally open	T32F	42 mm	**8034771**	**VSVA-B-T32F-AZTR-D1-1T1L**
	Q	2x 3/2-way valve, single solenoid, reverse operation, normally closed	T32N	42 mm	**8034769**	**VSVA-B-T32N-AZTR-D1-1T1L**
	R	2x 3/2-way valve, single solenoid, reverse operation, 1x normally open, 1x normally closed	T32W	42 mm	**8034773**	**VSVA-B-T32W-AZTR-D1-1T1L**
	M	5/2-way valve, single solenoid, pneumatic spring return	M52-A	42 mm	**8034776**	**VSVA-B-M52-AZTR-D1-1T1L**
	O	5/2-way valve, single solenoid, reset via mechanical spring	M52-M	42 mm	**8034777**	**VSVA-B-M52-MZTR-D1-1T1L**
	J	5/2-way valve, double solenoid	B52	42 mm	**8034774**	**VSVA-B-B52-ZTR-D1-1T1L**
	D	5/2-way valve, double solenoid, with dominant signal	D52	42 mm	**8034775**	**VSVA-B-D52-ZTR-D1-1T1L**
	B	5/3-way solenoid valve, Mid-position pressurised	P53U	42 mm	**8034778**	**VSVA-B-P53U-ZTR-D1-1T1L**
	G	5/3-way solenoid valve, mid-position closed	P53C	42 mm	**8034780**	**VSVA-B-P53C-ZTR-D1-1T1L**
	E	5/3-way solenoid valve, Mid-position exhausted	P53E	42 mm	**8034779**	**VSVA-B-P53E-ZTR-D1-1T1L**
	VG	5/3-way solenoid valve, mid-position pressurised 1 to 2, 4 to 5 closed	P53F	42 mm	**8034783**	**VSVA-B-P53F-ZTR-D1-1T1L**

Ordering data – Solenoid valve 24 V DC

Ordering data – Solenoid valve VSVA with cover cap for MO, non-detenting (H)

	Terminal code	Valve function	Valve code	Width	Part no.	Type
Solenoid valves, 24 V DC						
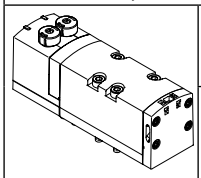	VC	2x 2/2-way valve, single solenoid, normally closed, pneumatic spring return	T22C	42 mm	**8034812**	**VSVA-B-T22C-AZH-D1-1T1L**
	VV	2x 2/2-way valve, single solenoid, normally closed, pneumatic spring return, vacuum operation possible at 3 and 5	T22CV	42 mm	**8034813**	**VSVA-B-T22CV-AZH-D1-1T1L**
	N	2x 3/2-way valve, single solenoid, normally open	T32U	42 mm	**8034801**	**VSVA-B-T32U-AZH-D1-1T1L**
	K	2x 3/2-way valve, single solenoid, normally closed	T32C	42 mm	**8034799**	**VSVA-B-T32C-AZH-D1-1T1L**
	H	2x 3/2-way valve, single solenoid, 1x normally open, 1x normally closed	T32H	42 mm	**8034803**	**VSVA-B-T32H-AZH-D1-1T1L**
	P	2x 3/2-way valve, single solenoid, reverse operation, normally open	T32F	42 mm	**8034802**	**VSVA-B-T32F-AZH-D1-1T1L**
	Q	2x 3/2-way valve, single solenoid, reverse operation, normally closed	T32N	42 mm	**8034800**	**VSVA-B-T32N-AZH-D1-1T1L**
	R	2x 3/2-way valve, single solenoid, reverse operation, 1x normally open, 1x normally closed	T32W	42 mm	**8034804**	**VSVA-B-T32W-AZH-D1-1T1L**
	M	5/2-way valve, single solenoid, pneumatic spring return	M52-A	42 mm	**8034807**	**VSVA-B-M52-AZH-D1-1T1L**
	O	5/2-way valve, single solenoid, reset via mechanical spring	M52-M	42 mm	**8034808**	**VSVA-B-M52-MZH-D1-1T1L**
	J	5/2-way valve, double solenoid	B52	42 mm	**8034805**	**VSVA-B-B52-ZH-D1-1T1L**
	D	5/2-way valve, double solenoid, with dominant signal	D52	42 mm	**8034806**	**VSVA-B-D52-ZH-D1-1T1L**
	B	5/3-way solenoid valve, Mid-position pressurised	P53U	42 mm	**8034809**	**VSVA-B-P53U-ZH-D1-1T1L**
	G	5/3-way solenoid valve, mid-position closed	P53C	42 mm	**8034811**	**VSVA-B-P53C-ZH-D1-1T1L**
	E	5/3-way solenoid valve, Mid-position exhausted	P53E	42 mm	**8034810**	**VSVA-B-P53E-ZH-D1-1T1L**
	VG	5/3-way solenoid valve, mid-position pressurised 1 to 2, 4 to 5 closed	P53F	42 mm	**8034814**	**VSVA-B-P53F-ZH-D1-1T1L**

Ordering data – Solenoid valve 24 V DC

Ordering data – Solenoid valve VSVA with cover cap for MO, concealed

	Terminal code	Valve function	Valve code	Width	Part no.	Type
Solenoid valves, 24 V DC						
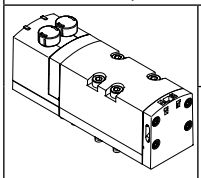	VC	2x 2/2-way valve, single solenoid, normally closed, pneumatic spring return	T22C	42 mm	**8034843**	**VSVA-B-T22C-AZ-D1-1T1L**
	VV	2x 2/2-way valve, single solenoid, normally closed, pneumatic spring return, vacuum operation possible at 3 and 5	T22CV	42 mm	**8034844**	**VSVA-B-T22CV-AZ-D1-1T1L**
	N	2x 3/2-way valve, single solenoid, normally open	T32U	42 mm	**8034832**	**VSVA-B-T32U-AZ-D1-1T1L**
	K	2x 3/2-way valve, single solenoid, normally closed	T32C	42 mm	**8034830**	**VSVA-B-T32C-AZ-D1-1T1L**
	H	2x 3/2-way valve, single solenoid, 1x normally open, 1x normally closed	T32H	42 mm	**8034834**	**VSVA-B-T32H-AZ-D1-1T1L**
	P	2x 3/2-way valve, single solenoid, reverse operation, normally open	T32F	42 mm	**8034833**	**VSVA-B-T32F-AZ-D1-1T1L**
	Q	2x 3/2-way valve, single solenoid, reverse operation, normally closed	T32N	42 mm	**8034831**	**VSVA-B-T32N-AZ-D1-1T1L**
	R	2x 3/2-way valve, single solenoid, reverse operation, 1x normally open, 1x normally closed	T32W	42 mm	**8034835**	**VSVA-B-T32W-AZ-D1-1T1L**
	M	5/2-way valve, single solenoid, pneumatic spring return	M52-A	42 mm	**8034838**	**VSVA-B-M52-AZ-D1-1T1L**
	O	5/2-way valve, single solenoid, reset via mechanical spring	M52-M	42 mm	**8034839**	**VSVA-B-M52-MZ-D1-1T1L**
	J	5/2-way valve, double solenoid	B52	42 mm	**8034836**	**VSVA-B-B52-Z-D1-1T1L**
	D	5/2-way valve, double solenoid, with dominant signal	D52	42 mm	**8034837**	**VSVA-B-D52-Z-D1-1T1L**
	B	5/3-way solenoid valve, Mid-position pressurised	P53U	42 mm	**8034840**	**VSVA-B-P53U-Z-D1-1T1L**
	G	5/3-way solenoid valve, mid-position closed	P53C	42 mm	**8034842**	**VSVA-B-P53C-Z-D1-1T1L**
	E	5/3-way solenoid valve, Mid-position exhausted	P53E	42 mm	**8034841**	**VSVA-B-P53E-Z-D1-1T1L**
	VG	5/3-way solenoid valve, mid-position pressurised 1 to 2, 4 to 5 closed	P53F	42 mm	**8034845**	**VSVA-B-P53F-Z-D1-1T1L**

Ordering data – Solenoid valve 24 V DC – for VTSA-F-CB

Ordering data – Solenoid valve VSVA with central plug, 3-pin, M12x1, round design

	Terminal code	Valve function	Valve code	Width	Part no.	Type
Solenoid valves, 24 V DC						
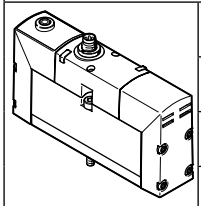	QN	2x 3/2-way valve, single solenoid, normally open	T32U	42 mm	**561370**	**VSVA-B-T32U-AZD-D1-1R5L**
	QK	2x 3/2-way valve, single solenoid, Normally closed	T32C	42 mm	**561369**	**VSVA-B-T32C-AZD-D1-1R5L**
	QH	2x 3/2-way valve, single solenoid, 1x normally open, 1x normally closed	T32H	42 mm	**561371**	**VSVA-B-T32H-AZD-D1-1R5L**
	QM	5/2-way valve, single solenoid, pneumatic spring return	M52-A	42 mm	**561372**	**VSVA-B-M52-AZD-D1-1R5L**
	QO	5/2-way valve, single solenoid, reset via mechanical spring	M52-M	42 mm	**561373**	**VSVA-B-M52-MZD-D1-1R5L**
	QJ	5/2-way valve, double solenoid	B52	42 mm	**561374**	**VSVA-B-B52-ZD-D1-1R5L**
	QD	5/2-way valve, double solenoid, with dominant signal	D52	42 mm	**561375**	**VSVA-B-D52-ZD-D1-1R5L**
	QB	5/3-way solenoid valve, Mid-position pressurised	P53U	42 mm	**561378**	**VSVA-B-P53U-ZD-D1-1R5L**
	QG	5/3-way solenoid valve, mid-position closed	P53C	42 mm	**561376**	**VSVA-B-P53C-ZD-D1-1R5L**
	QE	5/3-way solenoid valve, Mid-position exhausted	P53E	42 mm	**561377**	**VSVA-B-P53E-ZD-D1-1R5L**

Note

Additional information about solenoid valves with central plug can be found in the existing catalogue documentation at:
www.festo.com/catalogue/... ➔ Support Portal:
Standards-based valve VSVA to ISO 15407-1 and ISO 5599-1 with M8 or M12 central plug

Datasheet – Solenoid valve width 52 mm

- Valve width
  to ISO 5599-2
  52 mm (ISO 2)

- Voltage
  24 V DC

- Flow rate
  Valve width 52 mm:
  VTSA up to 2900 l/min
  VTSA-F up to 2900 l/min
  VTSA-F-CB up to 2900 l/min

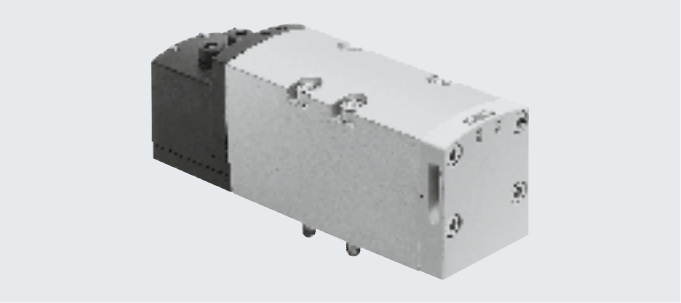

Safety characteristics for valve		
Conforms to		EN 13849-1/2
CE marking (see declaration of conformity)	Direct voltage 24 V DC	To EU EMC Directive [1]
KC marking		KC EMC
Shock resistance		Shock test with severity level 2, to EN 60068-2-27
Vibration resistance		Transport application test with severity level 2, to EN 60068-2-6

1) For information about the area of use, see the EC declaration of conformity at: www.festo.com/catalogue/... → Support/Downloads.
If the devices are subject to usage restrictions in residential, commercial or light-industrial environments, further measures for the reduction of the emitted interference may be necessary.

Safety characteristics for valve, 24 V DC			
Valve function (with valve code)	Terminal code	Test pulses	
		Max. positive test pulse with logic 0 [µs]	Max. negative test pulse with logic 1 [µs]
5/2-way, double solenoid (B52)	J	1000	3500
5/2-way, double solenoid with dominant signal (D52)	D	1000	3500
5/2-way, single solenoid (M52-A)	M	1000	3500
5/2-way, single solenoid (M52-M)	O	1000	3500
5/3-way, closed (P53C)	G	1000	3500
5/3-way, exhausted (P53E)	E	1000	3500
5/3-way, pressurised (P53U)	B	1000	3500
5/3-way, pressurised 1 to 2, 4 to 5 closed (P53F)	VG	–	–
2x3/2-way, single solenoid, closed (T32C)	K	1000	3500
2x3/2-way, single solenoid, open (T32U)	N	1000	3500
2x3/2-way, single solenoid, open/closed (T32H)	H	1000	3500
2x3/2-way, single solenoid, closed (T32N)	Q	1000	3500
2x3/2-way, single solenoid, open (T32F)	P	1000	3500
2x3/2-way, single solenoid, open/closed (T32W)	R	1000	3500
2x2/2-way, single solenoid, closed (T22C)	VC	1000	3500

Datasheet – Solenoid valve width 52 mm

Datasheet for valve							
Valve function (with valve code)	Terminal code	Flow direction			Reset method		Weight [g]
		Any	Reversible only	Not reversible	Pneumatic spring	Mechanical spring	
5/2-way, double solenoid (B52)	J	■	–	–	–	–	732
5/2-way, double solenoid with dominant signal (D52)	D	■	–	–	–	–	732
5/2-way, single solenoid (M52-A)	M	■	–	–	■	–	702
5/2-way, single solenoid (M52-M)	O	■	–	–	–	■	702
5/3-way, closed[1] (P53C)	G	■	–	–	–	■	780
5/3-way, exhausted[1] (P53E)	E	■	–	–	–	■	780
5/3-way, pressurised[1] (P53U)	B	■	–	–	–	■	780
5/3-way, pressurised 1 to 2, 4 to 5 closed (P53F)	VG	■	–	–	–	–	780
2x3/2-way, single solenoid, closed (T32C)	K	–	–	■	■	–	740
2x3/2-way, single solenoid, open (T32U)	N	–	–	■	■	–	740
2x3/2-way, single solenoid, open/closed (T32H)	H	–	–	■	■	–	740
2x3/2-way, single solenoid, closed (T32N)	Q	–	■	–	■	–	740
2x3/2-way, single solenoid, open (T32F)	P	–	■	–	■	–	740
2x3/2-way, single solenoid, open/closed (T32W)	R	–	■	–	■	–	740
2x2/2-way, single solenoid, closed (T22C)	VC	–	–	■	■	–	740

1) If neither solenoid coil is energised, the valve is moved to its mid-position by spring force.
If both solenoid coils are energised at the same time, the valve remains in the previously assumed switching position

Standard nominal flow rate of valve/valve terminal [l/min]						
Valve function (with valve code)	Terminal code	Flow rate				
		Valve	Valve on valve terminal			Valve on individual sub-base
			VTSA	VTSA-F	VTSA-F-CB	
5/2-way, double solenoid (B52)	J	4000	2900	2900	2900	3400
5/2-way, double solenoid with dominant signal (D52)	D	4000	2900	2900	2900	3400
5/2-way, single solenoid (M52-A)	M	4000	2900	2900	2900	3400
5/2-way, single solenoid (M52-M)	O	4000	2900	2900	2900	3400
5/3-way, closed (P53C)	G	3600[1] 1700[2]	2800[1] 1700[2]	2800[1] 1700[2]	2800[1] 1700[2]	3200[1] 1700[2]
5/3-way, exhausted (P53E)	E	3600[1] 1700[2]	2800[1] 1700[2]	2800[1] 1700[2]	2800[1] 1700[2]	3200[1] 1700[2]
5/3-way, pressurised (P53U)	B	3600[1] 1700[2]	2800[1] 1700[2]	2800[1] 1700[2]	2800[1] 1700[2]	3200[1] 1700[2]
5/3-way, pressurised 1 to 2, 4 to 5 closed (P53F)	VG	3000[1] 900[2]	2300[1] 900[2]	2300[1] 900[2]	2300[1] 900[2]	2600[1] 900[2]
2x3/2-way, single solenoid, closed (T32C)	K	3000	2400	2400	2400	2600
2x3/2-way, single solenoid, open (T32U)	N	3000	2400	2400	2400	2600
2x3/2-way, single solenoid, open/closed (T32H)	H	3000	2400	2400	2400	2600
2x3/2-way, single solenoid, closed (T32N)	Q	3000	2400	2400	2400	2600
2x3/2-way, single solenoid, open (T32F)	P	3000	2400	2400	2400	2600
2x3/2-way, single solenoid, open/closed (T32W)	R	3000	2400	2400	2400	2600
2x2/2-way, single solenoid, closed (T22C)	VC	4000	2800	2800	2800	3400

1) Switching position
2) Mid-position

Datasheet – Solenoid valve width 52 mm

Valve switching times in [ms]				
Valve function (with valve code)	Terminal code	24 V DC		
		On	Off	Changeover
5/2-way, double solenoid (B52)	J	–	–	18
5/2-way, double solenoid with dominant signal (D52)	D	–	–	18
5/2-way, single solenoid (M52-A)	M	40	45	–
5/2-way, single solenoid (M52-M)	O	20	60	–
5/3-way, closed (P53C)	G	23	60	38
5/3-way, exhausted (P53E)	E	23	60	38
5/3-way, pressurised (P53U)	B	23	60	38
5/3-way, pressurised 1 to 2, 4 to 5 closed (P53F)	VG	23	60	38
2x3/2-way, single solenoid, closed (T32C)	K	20	35	–
2x3/2-way, single solenoid, open (T32U)	N	20	35	–
2x3/2-way, single solenoid, open/closed (T32H)	H	20	35	–
2x3/2-way, single solenoid, closed (T32N)	Q	20	35	–
2x3/2-way, single solenoid, open (T32F)	P	20	35	–
2x3/2-way, single solenoid, open/closed (T32W)	R	20	35	–
2x2/2-way, single solenoid, closed (T22C)	VC	14	35	–

Characteristic coil data		
Valve function (with valve code)	Terminal code	Characteristic coil data at 24 V DC in [W]
5/2-way, double solenoid (B52)	J	4.6
5/2-way, double solenoid with dominant signal (D52)	D	4.6
5/2-way, single solenoid (M52-A)	M	4.6
5/2-way, single solenoid (M52-M)	O	4.6
5/3-way, closed (P53C)	G	4.6
5/3-way, exhausted (P53E)	E	4.6
5/3-way, pressurised (P53U)	B	4.6
5/3-way, pressurised 1 to 2, 4 to 5 closed (P53F)	VG	4.6
2x3/2-way, single solenoid, closed (T32C)	K	4.6
2x3/2-way, single solenoid, open (T32U)	N	4.6
2x3/2-way, single solenoid, open/closed (T32H)	H	4.6
2x3/2-way, single solenoid, closed (T32N)	Q	4.6
2x3/2-way, single solenoid, open (T32F)	P	4.6
2x3/2-way, single solenoid, open/closed (T32W)	R	4.6
2x2/2-way, single solenoid, closed (T22C)	VC	4.6

Max. current consumption per solenoid coil		
At nominal voltage 24 V DC (valves with holding current reduction)		
Nominal pick-up current	[mA]	165
Nominal current following current reduction	[mA]	35
Time until current reduction	[ms]	30

Materials	
Housing	Die-cast aluminium, PA
Seals	FPM, NBR, HNBR
Screws	Galvanised steel
Note on materials	RoHS-compliant

Ordering data – Solenoid valve 24 V DC

Ordering data – Solenoid valve VSVA, MO non-detenting/detenting (D)

	Terminal code	Valve function	Valve code	Width	Part no.	Type
Solenoid valves, 24 V DC						
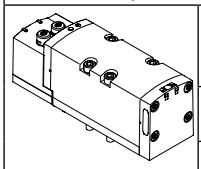	VC	2x 2/2-way valve, single solenoid, normally closed, pneumatic spring return	T22C	52 mm	**560831**	**VSVA-B-T22C-AZD-D2-1T1L**
	N	2x 3/2-way valve, single solenoid, normally open	T32U	52 mm	**560827**	**VSVA-B-T32U-AZD-D2-1T1L**
	K	2x 3/2-way valve, single solenoid, normally closed	T32C	52 mm	**560825**	**VSVA-B-T32C-AZD-D2-1T1L**
	H	2x 3/2-way valve, single solenoid, 1x normally open, 1x normally closed	T32H	52 mm	**560829**	**VSVA-B-T32H-AZD-D2-1T1L**
	P	2x 3/2-way valve, single solenoid, reverse operation, normally open	T32F	52 mm	**560828**	**VSVA-B-T32F-AZD-D2-1T1L**
	Q	2x 3/2-way valve, single solenoid, reverse operation, normally closed	T32N	52 mm	**560826**	**VSVA-B-T32N-AZD-D2-1T1L**
	R	2x 3/2-way valve, single solenoid, reverse operation, 1x normally open, 1x normally closed	T32W	52 mm	**560830**	**VSVA-B-T32W-AZD-D2-1T1L**
	M	5/2-way valve, single solenoid, pneumatic spring return	M52-A	52 mm	**560820**	**VSVA-B-M52-AZD-D2-1T1L**
	O	5/2-way valve, single solenoid, reset via mechanical spring	M52-M	52 mm	**560821**	**VSVA-B-M52-MZD-D2-1T1L**
	J	5/2-way valve, double solenoid	B52	52 mm	**560818**	**VSVA-B-B52-ZD-D2-1T1L**
	D	5/2-way valve, double solenoid, with dominant signal	D52	52 mm	**560819**	**VSVA-B-D52-ZD-D2-1T1L**
	B	5/3-way solenoid valve, Mid-position pressurised	P53U	52 mm	**560822**	**VSVA-B-P53U-ZD-D2-1T1L**
	G	5/3-way solenoid valve, mid-position closed	P53C	52 mm	**560824**	**VSVA-B-P53C-ZD-D2-1T1L**
	E	5/3-way solenoid valve, Mid-position exhausted	P53E	52 mm	**560823**	**VSVA-B-P53E-ZD-D2-1T1L**
	VG	5/3-way solenoid valve, mid-position pressurised 1 to 2, 4 to 5 closed	P53F	52 mm	**8000465**	**VSVA-B-P53F-ZD-D2-1T1L**

Ordering data – Solenoid valve 24 V DC

Ordering data – Solenoid valve VSVA with cover cap for MO non-detenting/heavy duty, detenting via accessory (TR)

	Terminal code	Valve function	Valve code	Width	Part no.	Type
Solenoid valves, 24 V DC						
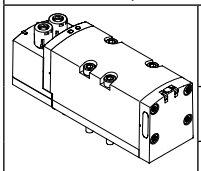	VC	2x 2/2-way valve, single solenoid, normally closed, pneumatic spring return	T22C	52 mm	**8034967**	**VSVA-B-T22C-AZTR-D2-1T1L**
	N	2x 3/2-way valve, single solenoid, normally open	T32U	52 mm	**8034963**	**VSVA-B-T32U-AZTR-D2-1T1L**
	K	2x 3/2-way valve, single solenoid, normally closed	T32C	52 mm	**8034961**	**VSVA-B-T32C-AZTR-D2-1T1L**
	H	2x 3/2-way valve, single solenoid, 1x normally open, 1x normally closed	T32H	52 mm	**8034965**	**VSVA-B-T32H-AZTR-D2-1T1L**
	P	2x 3/2-way valve, single solenoid, reverse operation, normally open	T32F	52 mm	**8034964**	**VSVA-B-T32F-AZTR-D2-1T1L**
	Q	2x 3/2-way valve, single solenoid, reverse operation, normally closed	T32N	52 mm	**8034962**	**VSVA-B-T32N-AZTR-D2-1T1L**
	R	2x 3/2-way valve, single solenoid, reverse operation, 1x normally open, 1x normally closed	T32W	52 mm	**8034966**	**VSVA-B-T32W-AZTR-D2-1T1L**
	M	5/2-way valve, single solenoid, pneumatic spring return	M52-A	52 mm	**8034956**	**VSVA-B-M52-AZTR-D2-1T1L**
	O	5/2-way valve, single solenoid, reset via mechanical spring	M52-M	52 mm	**8034957**	**VSVA-B-M52-MZTR-D2-1T1L**
	J	5/2-way valve, double solenoid	B52	52 mm	**8034954**	**VSVA-B-B52-ZTR-D2-1T1L**
	D	5/2-way valve, double solenoid, with dominant signal	D52	52 mm	**8034955**	**VSVA-B-D52-ZTR-D2-1T1L**
	B	5/3-way solenoid valve, Mid-position pressurised	P53U	52 mm	**8034958**	**VSVA-B-P53U-ZTR-D2-1T1L**
	G	5/3-way solenoid valve, mid-position closed	P53C	52 mm	**8034960**	**VSVA-B-P53C-ZTR-D2-1T1L**
	E	5/3-way solenoid valve, Mid-position exhausted	P53E	52 mm	**8034959**	**VSVA-B-P53E-ZTR-D2-1T1L**
	VG	5/3-way solenoid valve, mid-position pressurised 1 to 2, 4 to 5 closed	P53F	52 mm	**8034968**	**VSVA-B-P53F-ZTR-D2-1T1L**

Ordering data – Solenoid valve 24 V DC

Ordering data – Solenoid valve VSVA with cover cap for MO, non-detenting (H)

	Terminal code	Valve function	Valve code	Width	Part no.	Type
Solenoid valves, 24 V DC						
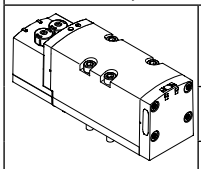	VC	2x 2/2-way valve, single solenoid, normally closed, pneumatic spring return	T22C	52 mm	**8034982**	**VSVA-B-T22C-AZH-D2-1T1L**
	N	2x 3/2-way valve, single solenoid, normally open	T32U	52 mm	**8034978**	**VSVA-B-T32U-AZH-D2-1T1L**
	K	2x 3/2-way valve, single solenoid, normally closed	T32C	52 mm	**8034976**	**VSVA-B-T32C-AZH-D2-1T1L**
	H	2x 3/2-way valve, single solenoid, 1x normally open, 1x normally closed	T32H	52 mm	**8034980**	**VSVA-B-T32H-AZH-D2-1T1LL**
	P	2x 3/2-way valve, single solenoid, reverse operation, normally open	T32F	52 mm	**8034979**	**VSVA-B-T32F-AZH-D2-1T1L**
	Q	2x 3/2-way valve, single solenoid, reverse operation, normally closed	T32N	52 mm	**8034977**	**VSVA-B-T32N-AZH-D2-1T1L**
	R	2x 3/2-way valve, single solenoid, reverse operation, 1x normally open, 1x normally closed	T32W	52 mm	**8034981**	**VSVA-B-T32W-AZH-D2-1T1L**
	M	5/2-way valve, single solenoid, pneumatic spring return	M52-A	52 mm	**8034971**	**VSVA-B-M52-AZH-D2-1T1L**
	O	5/2-way valve, single solenoid, reset via mechanical spring	M52-M	52 mm	**8034972**	**VSVA-B-M52-MZH-D2-1T1L**
	J	5/2-way valve, double solenoid	B52	52 mm	**8034969**	**VSVA-B-B52-ZH-D2-1T1L**
	D	5/2-way valve, double solenoid, with dominant signal	D52	52 mm	**8034970**	**VSVA-B-D52-ZH-D2-1T1L**
	B	5/3-way solenoid valve, Mid-position pressurised	P53U	52 mm	**8034973**	**VSVA-B-P53U-ZH-D2-1T1L**
	G	5/3-way solenoid valve, mid-position closed	P53C	52 mm	**8034975**	**VSVA-B-P53C-ZH-D2-1T1L**
	E	5/3-way solenoid valve, Mid-position exhausted	P53E	52 mm	**8034974**	**VSVA-B-P53E-ZH-D2-1T1L**
	VG	5/3-way solenoid valve, mid-position pressurised 1 to 2, 4 to 5 closed	P53F	52 mm	**8034983**	**VSVA-B-P53F-ZH-D2-1T1L**

Ordering data – Solenoid valve 24 V DC

Ordering data – Solenoid valve VSVA with cover cap for MO, concealed

	Terminal code	Valve function	Valve code	Width	Part no.	Type
Solenoid valves, 24 V DC						
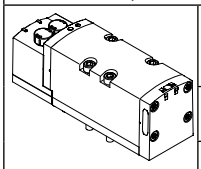	VC	2x 2/2-way valve, single solenoid, normally closed, pneumatic spring return	T22C	52 mm	**8034997**	**VSVA-B-T22C-AZ-D2-1T1L**
	N	2x 3/2-way valve, single solenoid, normally open	T32U	52 mm	**8034993**	**VSVA-B-T32U-AZ-D2-1T1L**
	K	2x 3/2-way valve, single solenoid, normally closed	T32C	52 mm	**8034991**	**VSVA-B-T32C-AZ-D2-1T1L**
	H	2x 3/2-way valve, single solenoid, 1x normally open, 1x normally closed	T32H	52 mm	**8034995**	**VSVA-B-T32H-AZ-D2-1T1L**
	P	2x 3/2-way valve, single solenoid, reverse operation, normally open	T32F	52 mm	**8034994**	**VSVA-B-T32F-AZ-D2-1T1L**
	Q	2x 3/2-way valve, single solenoid, reverse operation, normally closed	T32N	52 mm	**8034992**	**VSVA-B-T32N-AZ-D2-1T1L**
	R	2x 3/2-way valve, single solenoid, reverse operation, 1x normally open, 1x normally closed	T32W	52 mm	**8034996**	**VSVA-B-T32W-AZ-D2-1T1L**
	M	5/2-way valve, single solenoid, pneumatic spring return	M52-A	52 mm	**8034986**	**VSVA-B-M52-AZ-D2-1T1L**
	O	5/2-way valve, single solenoid, reset via mechanical spring	M52-M	52 mm	**8034987**	**VSVA-B-M52-MZ-D2-1T1L**
	J	5/2-way valve, double solenoid	B52	52 mm	**8034984**	**VSVA-B-B52-Z-D2-1T1L**
	D	5/2-way valve, double solenoid, with dominant signal	D52	52 mm	**8034985**	**VSVA-B-D52-Z-D2-1T1L**
	B	5/3-way solenoid valve, Mid-position pressurised	P53U	52 mm	**8034988**	**VSVA-B-P53U-Z-D2-1T1L**
	G	5/3-way solenoid valve, mid-position closed	P53C	52 mm	**8034990**	**VSVA-B-P53C-Z-D2-1T1L**
	E	5/3-way solenoid valve, Mid-position exhausted	P53E	52 mm	**8034989**	**VSVA-B-P53E-Z-D2-1T1L**
	VG	5/3-way solenoid valve, mid-position pressurised 1 to 2, 4 to 5 closed	P53F	52 mm	**8034998**	**VSVA-B-P53F-Z-D2-1T1L**

Ordering data – Solenoid valve 24 V DC – for VTSA-F-CB

Ordering data – Solenoid valve VSVA with central plug, 3-pin, M12x1, round design						
	Terminal code	Valve function	Valve code	Width	Part no.	Type
Solenoid valves, 24 V DC						
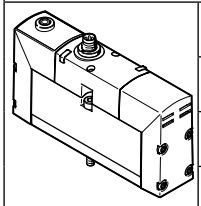	QN	2x 3/2-way valve, single solenoid, normally open	T32U	52 mm	**567001**	**VSVA-B-T32U-AZD-D2-1R5L**
	QK	2x 3/2-way valve, single solenoid, normally closed	T32C	52 mm	**567000**	**VSVA-B-T32C-AZD-D2-1R5L**
	QH	2x 3/2-way valve, single solenoid, 1x normally open, 1x normally closed	T32H	52 mm	**567002**	**VSVA-B-T32H-AZD-D2-1R5L**
	QM	5/2-way valve, single solenoid, pneumatic spring return	M52-A	52 mm	**567003**	**VSVA-B-M52-AZD-D2-1R5L**
	QO	5/2-way valve, single solenoid, reset via mechanical spring	M52-M	52 mm	**567004**	**VSVA-B-M52-MZD-D2-1R5L**
	QJ	5/2-way valve, double solenoid	B52	52 mm	**567005**	**VSVA-B-B52-ZD-D2-1R5L**
	QD	5/2-way valve, double solenoid, with dominant signal	D52	52 mm	**567006**	**VSVA-B-D52-ZD-D2-1R5L**
	QB	5/3-way solenoid valve, Mid-position pressurised	P53U	52 mm	**567009**	**VSVA-B-P53U-ZD-D2-1R5L**
	QG	5/3-way solenoid valve, mid-position closed	P53C	52 mm	**567007**	**VSVA-B-P53C-ZD-D2-1R5L**
	QE	5/3-way solenoid valve, Mid-position exhausted	P53E	52 mm	**567008**	**VSVA-B-P53E-ZD-D2-1R5L**

Note

Additional information about solenoid valves with central plug can be found in the existing catalogue documentation at:
www.festo.com/catalogue/... → Support Portal:
Standards-based valve VSVA to ISO 15407-1 and ISO 5599-1 with M8 or M12 central plug

Accessories – Pneumatic components

Ordering data – Manifold sub-base	Code	Description	Width	Part no.	Type
VTSA, port pattern to ISO 15407-2 and ISO 5599-2					
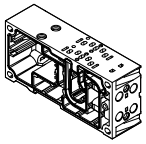	A	2 valve positions, 4 addresses, for double solenoid valves	18 mm	**539224**	**VABV-S4-2S-G18-2T2**
	B	2 valve positions, 4 addresses, for double solenoid valves	26 mm	**539220**	**VABV-S4-1S-G14-2T2**
	C	1 valve position, 2 addresses, for double solenoid valves	42 mm	**542458**	**VABV-S2-1S-G38-T2**
	D	1 valve position, 2 addresses, for double solenoid valves	52 mm	**560841**	**VABV-S2-2S-G12-T2**
	E	2 valve positions, 2 addresses, for single solenoid valves	18 mm	**539226**	**VABV-S4-2S-G18-2T1**
	F	2 valve positions, 2 addresses, for single solenoid valves	26 mm	**539222**	**VABV-S4-1S-G14-2T1**
	G	1 valve position, 1 address, for single solenoid valves	42 mm	**542459**	**VABV-S2-1S-G38-T1**
	H	1 valve position, 1 address, for single solenoid valves	52 mm	**560842**	**VABV-S2-2S-G12-T1**
VTSA-F, optimised for flow rate					
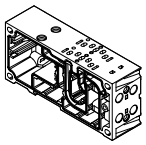	A	2 valve positions, 4 addresses, for double solenoid valves	18 mm	**546215**	**VABV-S4-2HS-G18-2T2**
	B	2 valve positions, 4 addresses, for double solenoid valves	26 mm	**546211**	**VABV-S4-1HS-G14-2T2**
	C	1 valve position, 2 addresses, for double solenoid valves	42 mm	**546219**	**VABV-S2-1HS-G38-T2**
	D	1 valve position, 2 addresses, for double solenoid valves	52 mm	**560841**	**VABV-S2-2S-G12-T2**
	E	2 valve positions, 2 addresses, for single solenoid valves	18 mm	**546214**	**VABV-S4-2HS-G18-2T1**
	F	2 valve positions, 2 addresses, for single solenoid valves	26 mm	**546210**	**VABV-S4-1HS-G14-2T1**
	G	1 valve position, 1 address, for single solenoid valves	42 mm	**546218**	**VABV-S2-1HS-G38-T1**
	H	1 valve position, 1 address, for single solenoid valves	52 mm	**560842**	**VABV-S2-2S-G12-T1**
VTSA-F-CB, with CBUS loop-through					
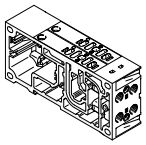	A	2 valve positions, 4 addresses, for double solenoid valves[1)]	18 mm	**8067932**	**VABV-S4-2HS-G18-CB-2T2**
	B	2 valve positions, 4 addresses, for double solenoid valves[1)]	26 mm	**8067940**	**VABV-S4-1HS-G14-CB-2T2**
	C	1 valve position, 2 addresses, for double solenoid valves[1)]	42 mm	**8068154**	**VABV-S2-1HS-G38-CB-T2**
	D	1 valve position, 2 addresses, for double solenoid valves[1)]	52 mm	**8068146**	**VABV-S2-2S-G12-CB-T2**
	E	2 valve positions, 2 addresses, for single solenoid valves[1)]	18 mm	**8067934**	**VABV-S4-2HS-G18-CB-2T1**
	F	2 valve positions, 2 addresses, for single solenoid valves[1)]	26 mm	**8067942**	**VABV-S4-1HS-G14-CB-2T1**
	G	1 valve position, 1 address, for single solenoid valves[1)]	42 mm	**8068156**	**VABV-S2-1HS-G38-CB-T1**
	H	1 valve position, 1 address, for single solenoid valves[1)]	52 mm	**8068148**	**VABV-S2-2S-G12-CB-T1**
VTSA-F-CB, with CBUS loop-through for pilot air switching valve					
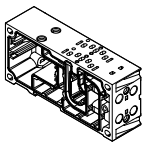	YB	2 valve positions, for pilot air switching valve • 1 valve position, width 18 mm, with CBUS communication • 1 valve position, width 18 mm, double solenoid • Sensor evaluation: internal	18 mm	**8068913**	**VABV-S4-2HS-G18-CB-2T5**
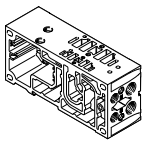	YA	2 valve positions, 4 addresses, for double solenoid valves[1)] • 1 valve position, width 18 mm • 1 valve position, width 26 mm Sensor evaluation: external	18/26 mm	**8068911**	**VABV-S4-12HS-G-CB-2T2**
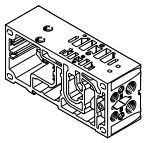	YC	2 valve positions, for pilot air switching valve • 1 valve position, width 18 mm, with CBUS communication • 1 valve position, width 26 mm, double solenoid • Sensor evaluation: internal	18/26 mm	**8068912**	**VABV-S4-12HS-G-CB-2T5**
VTSA-F-CB, with CBUS loop-through for soft-start valve					
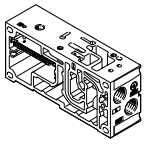	PV	• With CBUS loop-through and new voltage zone • Pressure sensor plug-in • Sensor evaluation: internal (Ports 2 and 4 are combined), pneumatic connection G3/8, M5	41 mm	**8068609**	**VABV-S6-1Q-G38-CB1-T5**
	PS	• With CBUS loop-through in the same voltage zone • Pressure sensor plug-in • Sensor evaluation: internal (Ports 2 and 4 are combined), pneumatic connection G3/8, M5	41 mm	**8068610**	**VABV-S6-1Q-G38-CB-T5**

1) When using single solenoid valves on double solenoid sub-bases, one address will be lost!

Accessories – Pneumatic components

Ordering data – Supply plate/extension module	Code	Description		Width	Part no.	Type
VTSA/VTSA-F, supply plate						
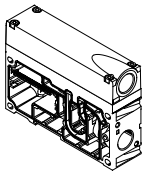	L	With exhaust plate, 3/5 common, G1/2		38 mm	**539231**	**VABF-S6-1-P1A7-G12**
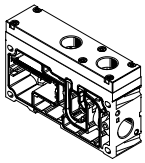	K	With exhaust air cover, 3/5 separated (for dual-pressure operation), G1/2		38 mm	**539230**	**VABF-S6-1-P1A6-G12**
VTSA-F-CB, extension module, pneumatic and electric air supply plate						
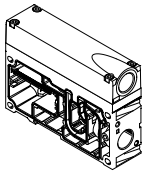	U	Additional air supply With exhaust plate, 3/5 common, G1/2		38 mm	**8092506**	**VABF-S6-1-P1A7-G12-CB**
	UW	Additional pneumatic and electrical supply With exhaust plate, 3/5 common, G1/2 Generation of 24 additional valve addresses (electrical supply is provided internally from Uval)		38 mm	**8104042**	**VABF-S6-1-P8A7-G12-CB**
	USW	Additional pneumatic and electrical supply With exhaust plate, 3/5 common, G1/2 Generation of 24 additional valve addresses (electrical supply is provided from new (safe) voltage zone (internally from S2))		38 mm	**8104044**	**VABF-S6-1-P8A7-G12-CB1**
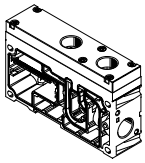	U	Additional air supply With exhaust air cover, 3/5 separated (for dual-pressure operation), G1/2		38 mm	**8092502**	**VABF-S6-1-P1A6-G12-CB**
	UW	Additional pneumatic and electrical supply With exhaust air cover, 3/5 separated (for dual-pressure operation), G1/2 Generation of 24 additional valve addresses (electrical supply is provided internally from Uval)		38 mm	**8104041**	**VABF-S6-1-P8A6-G12-CB**
	USW	Additional pneumatic and electrical supply With exhaust air cover, 3/5 separated (for dual-pressure operation), G1/2 Generation of 24 additional valve addresses (electrical supply is provided from new (safe) voltage zone (internally from S2))		38 mm	**8104043**	**VABF-S6-1-P8A6-G12-CB1**
90°-connection plate for VTSA/VTSA-F						
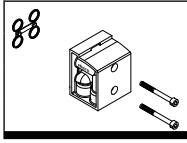	P	Outlet underneath	Connecting thread G1/8	18 mm	**539719**	**VABF-S4-2-A2G2-G18**
			Connecting thread G1/4	26 mm	**539721**	**VABF-S4-1-A2G2-G14**
			Connecting thread G3/8	42 mm	**546097**	**VABF-S2-1-A1G2-G38**
			Connecting thread G1/2	52 mm	**555702**	**VABF-S2-2-A1G2-G12**

Accessories – Pneumatic components

Ordering data – Vertical stacking

	Code	Description		Width	Part no.	Type
Vertical supply plate						
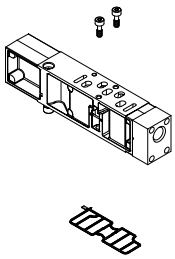	ZU	Individual compressed air supply, duct 1	Connecting thread G1/8	18 mm	**540173**	**VABF-S4-2-P1A3-G18**
			Connecting thread G1/4	26 mm	**540171**	**VABF-S4-1-P1A3-G14**
			Connecting thread G3/8	42 mm	**546093**	**VABF-S2-1-P1A3-G38**
			Connecting thread G1/2	52 mm	**555786**	**VABF-S2-2-P1A3-G12**
	ZV	Individual compressed air supply, ducts 1 and 14	Connecting thread G1/8	18 mm	**8000693**	**VABF-S4-2-P1A14-G18**
			Connecting thread G1/4	26 mm	**8000689**	**VABF-S4-1-P1A14-G14**
			Connecting thread G3/8	42 mm	**8000536**	**VABF-S2-1-P1A14-G38**
			Connecting thread G1/2	52 mm	**8000549**	**VABF-S2-2-P1A14-G12**
Vertical supply plate for valves with central plug, VTSA-F-CB						
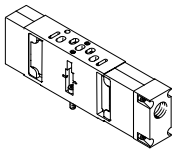	ZU	Individual compressed air supply, duct 1	Connecting thread G1/8	18 mm	**544435**	**VABF-S3-2-P1A3-G18**
			Connecting thread G1/4	26 mm	**544434**	**VABF-S3-1-P1A3-G14**
			Connecting thread G3/8	42 mm	**549100**	**VABF-S1-1-P1A3-G38**
			Connecting thread G1/2	52 mm	**555785**	**VABF-S1-2-P1A3-G12**

Ordering data – Vertical stacking

	Code	Pressure regulation for port	Control range [bar]	[MPa]	Width	Part no.	Type
Regulator plate, width 18 mm							
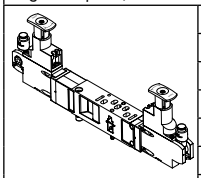	ZA	1	0.5 ... 8.5	0.05 ... 0.85	18 mm	**540153**	**VABF-S4-2-R1C2-C-10**
	ZF	1	0.5 ... 6	0.05 ... 0.6	18 mm	**540151**	**VABF-S4-2-R1C2-C-6**
	ZC	2	2 ... 8.5	0.2 ... 0.85	18 mm	**540161**	**VABF-S4-2-R2C2-C-10**
	ZH	2	2 ... 6	0.2 ... 0.6	18 mm	**540159**	**VABF-S4-2-R2C2-C-6**
	ZB	4	2 ... 8.5	0.2 ... 0.85	18 mm	**540157**	**VABF-S4-2-R3C2-C-10**
	ZG	4	2 ... 6	0.2 ...0.6	18 mm	**540155**	**VABF-S4-2-R3C2-C-6**
	ZD	2 and 4	2 ... 8.5	0.2 ... 0.85	18 mm	**540165**	**VABF-S4-2-R4C2-C-10**
	ZI	2 and 4	2 ... 6	0.2 ... 0.6	18 mm	**540163**	**VABF-S4-2-R4C2-C-6**
	ZE	2 and 4, reversible	0.5 ... 8.5	0.05 ... 0.85	18 mm	**540169**	**VABF-S4-2-R5C2-C-10**
	ZJ	2 and 4, reversible	0.5 ... 6	0.05 ... 0.6	18 mm	**540167**	**VABF-S4-2-R5C2-C-6**
	ZL	2, reversible	0.5 ... 8.5	0.05 ... 0.85	18 mm	**546252**	**VABF-S4-2-R6C2-C-10**
	ZN	2, reversible	0.5 ... 6	0.05 ... 0.6	18 mm	**546248**	**VABF-S4-2-R6C2-C-6**
	ZK	4, reversible	0.5 ... 8.5	0.05 ... 0.85	18 mm	**546254**	**VABF-S4-2-R7C2-C-10**
	ZM	4, reversible	0.5 ... 6	0.05 ... 0.6	18 mm	**546250**	**VABF-S4-2-R7C2-C-6**
Regulator plate, width 26 mm							
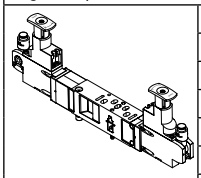	ZA	1	0.5 ... 8.5	0.05 ... 0.85	26 mm	**540154**	**VABF-S4-1-R1C2-C-10**
	ZF	1	0.5 ... 6	0.05 ... 0.6	26 mm	**540152**	**VABF-S4-1-R1C2-C-6**
	ZC	2	2 ... 8.5	0.2 ... 0.85	26 mm	**540162**	**VABF-S4-1-R2C2-C-10**
	ZH	2	2 ... 6	0.2 ...0.6	26 mm	**540160**	**VABF-S4-1-R2C2-C-6**
	ZB	4	2 ... 8.5	0.2 ... 0.85	26 mm	**540158**	**VABF-S4-1-R3C2-C-10**
	ZG	4	2 ... 6	0.2 ...0.6	26 mm	**540156**	**VABF-S4-1-R3C2-C-6**
	ZD	2 and 4	2 ... 8.5	0.2 ... 0.85	26 mm	**540166**	**VABF-S4-1-R4C2-C-10**
	ZI	2 and 4	2 ... 6	0.2 ...0.6	26 mm	**540164**	**VABF-S4-1-R4C2-C-6**
	ZE	2 and 4, reversible	0.5 ... 8.5	0.05 ... 0.85	26 mm	**540170**	**VABF-S4-1-R5C2-C-10**
	ZJ	2 and 4, reversible	0.5 ... 6	0.05 ... 0.6	26 mm	**540168**	**VABF-S4-1-R5C2-C-6**
	ZL	2, reversible	0.5 ... 8.5	0.05 ... 0.85	26 mm	**546251**	**VABF-S4-1-R6C2-C-10**
	ZN	2, reversible	0.5 ... 6	0.05 ... 0.6	26 mm	**546247**	**VABF-S4-1-R6C2-C-6**
	ZK	4, reversible	0.5 ... 8.5	0.05 ... 0.85	26 mm	**546253**	**VABF-S4-1-R7C2-C-10**
	ZM	4, reversible	0.5 ... 6	0.05 ... 0.6	26 mm	**546249**	**VABF-S4-1-R7C2-C-6**

Accessories – Pneumatic components

Ordering data – Vertical stacking

	Code	Pressure regulation for port	Control range [bar]	[MPa]	Width	Part no.	Type
Regulator plate, width 42 mm							
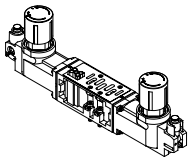	ZA	1	0.5 ... 8.5	0.05 ... 0.85	42 mm	**546084**	**VABF-S2-1-R1C2-C-10**
	ZF	1	0.5 ... 6	0.05 ... 0.6	42 mm	**546083**	**VABF-S2-1-R1C2-C-6**
	ZC	2	1.0 ... 10	0.1 ... 1	42 mm	**546088**	**VABF-S2-1-R2C2-C-10**
	ZH	2	1.0 ... 6	0.1 ... 0.6	42 mm	**546087**	**VABF-S2-1-R2C2-C-6**
	ZB	4	1.0 ... 10	0.1 ... 1	42 mm	**546086**	**VABF-S2-1-R3C2-C-10**
	ZG	4	0.5 ... 6	0.05 ... 0.6	42 mm	**546085**	**VABF-S2-1-R3C2-C-6**
	ZD	2 and 4	1.0 ... 10	0.1 ... 1	42 mm	**546090**	**VABF-S2-1-R4C2-C-10**
	ZI	2 and 4	1.0 ... 6	0.1 ... 0.6	42 mm	**546089**	**VABF-S2-1-R4C2-C-6**
	ZE	2 and 4, reversible	0.5 ... 10	0.05 ... 1	42 mm	**546092**	**VABF-S2-1-R5C2-C-10**
	ZJ	2 and 4, reversible	0.5 ... 6	0.05 ... 0.6	42 mm	**546091**	**VABF-S2-1-R5C2-C-6**
	ZL	2, reversible	0.5 ... 10	0.05 ... 1	42 mm	**546832**	**VABF-S2-1-R6C2-C-10**
	ZN	2, reversible	0.5 ... 6	0.05 ... 0.6	42 mm	**546831**	**VABF-S2-1-R6C2-C-6**
	ZK	4, reversible	0.5 ... 10	0.05 ... 1	42 mm	**546834**	**VABF-S2-1-R7C2-C-10**
	ZM	4, reversible	0.5 ... 6	0.05 ... 0.6	42 mm	**546833**	**VABF-S2-1-R7C2-C-6**
Regulator plate, width 52 mm							
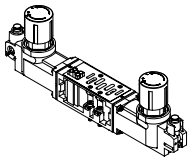	ZA	1	0.5 ... 10	0.05 ... 1	52 mm	**555772**	**VABF-S2-2-R1C2-C-10**
	ZF	1	0.5 ... 6	0.05 ... 0.6	52 mm	**555771**	**VABF-S2-2-R1C2-C-6**
	ZC	2	1.0 ... 10	0.1 ... 1	52 mm	**555774**	**VABF-S2-2-R2C2-C-10**
	ZH	2	1.0 ... 6	0.1 ... 0.6	52 mm	**555773**	**VABF-S2-2-R2C2-C-6**
	ZB	4	1.0 ... 10	0.1 ... 1	52 mm	**555776**	**VABF-S2-2-R3C2-C-10**
	ZG	4	1.0 ... 6	0.1 ... 0.6	52 mm	**555775**	**VABF-S2-2-R3C2-C-6**
	ZD	2 and 4	1.0 ... 10	0.1 ... 1	52 mm	**555778**	**VABF-S2-2-R4C2-C-10**
	ZI	2 and 4	1.0 ... 6	0.1 ... 0.6	52 mm	**555777**	**VABF-S2-2-R4C2-C-6**
	ZE	2 and 4, reversible	0.5 ... 10	0.05 ... 1	52 mm	**555780**	**VABF-S2-2-R5C2-C-10**
	ZJ	2 and 4, reversible	0.5 ... 6	0.05 ... 0.6	52 mm	**555779**	**VABF-S2-2-R5C2-C-6**
	ZL	2, reversible	0.5 ... 10	0.05 ... 1	52 mm	**555782**	**VABF-S2-2-R6C2-C-10**
	ZN	2, reversible	0.5 ... 6	0.05 ... 0.6	52 mm	**555781**	**VABF-S2-2-R6C2-C-6**
	ZK	4, reversible	0.5 ... 10	0.05 ... 1	52 mm	**555784**	**VABF-S2-2-R7C2-C-10**
	ZM	4, reversible	0.5 ... 6	0.05 ... 0.6	52 mm	**555783**	**VABF-S2-2-R7C2-C-6**

Accessories – Pneumatic components

Ordering data – Vertical stacking

	Code	Pressure regulation for port	Control range [bar]	[MPa]	Width	Part no.	Type
Regulator plate for valves with symmetrical design, width 18 mm							
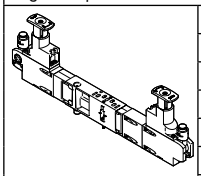	ZAY	1	0.5 ... 8.5	0.05 ... 0.85	18 mm	**560756**	**VABF-S4-2-R1C2-C-10E**
	ZFY	1	0.5 ... 6	0.05 ... 0.6	18 mm	**560758**	**VABF-S4-2-R1C2-C-6E**
	ZCY	2	2 ... 8.5	0.2 ... 0.85	18 mm	**560763**	**VABF-S4-2-R2C2-C-10E**
	ZHY	2	2 ... 6	0.2 ... 0.6	18 mm	**560765**	**VABF-S4-2-R2C2-C-6E**
	ZDY	2 and 4	2 ... 8.5	0.2 ... 0.85	18 mm	**560767**	**VABF-S4-2-R4C2-C-10E**
	ZIY	2 and 4	2 ... 6	0.2 ... 0.6	18 mm	**560769**	**VABF-S4-2-R4C2-C-6E**
	ZEY	2 and 4, reversible	0.5 ... 8.5	0.05 ... 0.85	18 mm	**560771**	**VABF-S4-2-R5C2-C-10E**
	ZJY	2 and 4, reversible	0.5 ... 6	0.05 ... 0.6	18 mm	**560773**	**VABF-S4-2-R5C2-C-6E**
	ZLY	2, reversible	0.5 ... 8.5	0.05 ... 0.85	18 mm	**560775**	**VABF-S4-2-R6C2-C-10E**
	ZNY	2, reversible	0.5 ... 6	0.05 ... 0.6	18 mm	**560777**	**VABF-S4-2-R6C2-C-6E**
Regulator plate for valves with symmetrical design, width 26 mm							
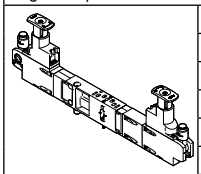	ZAY	1	0.5 ... 8.5	0.05 ... 0.85	26 mm	**560757**	**VABF-S4-1-R1C2-C-10E**
	ZFY	1	0.5 ... 6	0.05 ... 0.6	26 mm	**549876**	**VABF-S4-1-R1C2-C-6E**
	ZCY	2	2 ... 8.5	0.2 ... 0.85	26 mm	**560764**	**VABF-S4-1-R2C2-C-10E**
	ZHY	2	2 ... 6	0.2 ... 0.6	26 mm	**560766**	**VABF-S4-1-R2C2-C-6E**
	ZDY	2 and 4	2 ... 8.5	0.2 ... 0.85	26 mm	**560768**	**VABF-S4-1-R4C2-C-10E**
	ZIY	2 and 4	2 ... 6	0.2 ... 0.6	26 mm	**560770**	**VABF-S4-1-R4C2-C-6E**
	ZEY	2 and 4, reversible	0.5 ... 8.5	0.05 ... 0.85	26 mm	**560772**	**VABF-S4-1-R5C2-C-10E**
	ZJY	2 and 4, reversible	0.5 ... 6	0.05 ... 0.6	26 mm	**560774**	**VABF-S4-1-R5C2-C-6E**
	ZLY	2, reversible	0.5 ... 8.5	0.05 ... 0.85	26 mm	**560776**	**VABF-S4-1-R6C2-C-10E**
	ZNY	2, reversible	0.5 ... 6	0.05 ... 0.6	26 mm	**560778**	**VABF-S4-1-R6C2-C-6E**
Regulator plate for valves with symmetrical design, width 42 mm [1]							
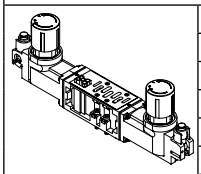	ZAY	1	0.5 ... 10	0.05 ... 1	42 mm	**–**	**VABF-S2-1-R1C2-C-10E**
	ZFY	1	0.5 ... 6	0.05 ... 0.6	42 mm	**–**	**VABF-S2-1-R1C2-C-6E**
	ZCY	2	0.5 ... 10	0.05 ... 1	42 mm	**–**	**VABF-S2-1-R2C2-C-10E**
	ZHY	2	0.5 ... 6	0.05 ... 0.6	42 mm	**–**	**VABF-S2-1-R2C2-C-6E**
	ZBY	4	0.5 ... 10	0.05 ... 1	42 mm	**–**	**VABF-S2-1-R3C2-C-10E**
	ZGY	4	0.5 ... 6	0.05 ... 0.6	42 mm	**–**	**VABF-S2-1-R3C2-C-6E**
	ZDY	2 and 4	0.5 ... 10	0.05 ... 1	42 mm	**–**	**VABF-S2-1-R4C2-C-10E**
	ZIY	2 and 4	0.5 ... 6	0.05 ... 0.6	42 mm	**–**	**VABF-S2-1-R4C2-C-6E**
	ZEY	2 and 4, reversible	0.5 ... 10	0.05 ... 1	42 mm	**–**	**VABF-S2-1-R5C2-C-10E**
	ZJY	2 and 4, reversible	0.5 ... 6	0.05 ... 0.6	42 mm	**–**	**VABF-S2-1-R5C2-C-6E**
	ZLY	2, reversible	0.5 ... 10	0.05 ... 1	42 mm	**–**	**VABF-S2-1-R6C2-C-10E**
	ZNY	2, reversible	0.5 ... 6	0.05 ... 0.6	42 mm	**–**	**VABF-S2-1-R6C2-C-6E**
	ZKY	4, reversible	0.5 ... 10	0.05 ... 1	42 mm	**–**	**VABF-S2-1-R7C2-C-10E**
	ZMY	4, reversible	0.5 ... 6	0.05 ... 0.6	42 mm	**–**	**VABF-S2-1-R7C2-C-6E**
Regulator plate for valves with symmetrical design, width 52 mm [1]							
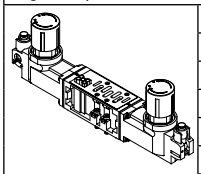	ZAY	1	0.5 ... 10	0.05 ... 1	52 mm	**–**	**VABF-S2-2-R1C2-C-10E**
	ZFY	1	0.5 ... 6	0.05 ... 0.6	52 mm	**–**	**VABF-S2-2-R1C2-C-6E**
	ZCY	2	0.5 ... 10	0.05 ... 1	52 mm	**–**	**VABF-S2-2-R2C2-C-10E**
	ZHY	2	0.5 ... 6	0.05 ... 0.6	52 mm	**–**	**VABF-S2-2-R2C2-C-6E**
	ZBY	4	0.5 ... 10	0.05 ... 1	52 mm	**–**	**VABF-S2-2-R3C2-C-10E**
	ZGY	4	0.5 ... 6	0.05 ... 0.6	52 mm	**–**	**VABF-S2-2-R3C2-C-6E**
	ZDY	2 and 4	0.5 ... 10	0.05 ... 1	52 mm	**–**	**VABF-S2-2-R4C2-C-10E**
	ZIY	2 and 4	0.5 ... 6	0.05 ... 0.6	52 mm	**–**	**VABF-S2-2-R4C2-C-6E**
	ZEY	2 and 4, reversible	0.5 ... 10	0.05 ... 1	52 mm	**–**	**VABF-S2-2-R5C2-C-10E**
	ZJY	2 and 4, reversible	0.5 ... 6	0.05 ... 0.6	52 mm	**–**	**VABF-S2-2-R5C2-C-6E**
	ZLY	2, reversible	0.5 ... 10	0.05 ... 1	52 mm	**–**	**VABF-S2-2-R6C2-C-10E**
	ZNY	2, reversible	0.5 ... 6	0.05 ... 0.6	52 mm	**–**	**VABF-S2-2-R6C2-C-6E**
	ZKY	4, reversible	0.5 ... 10	0.05 ... 1	52 mm	**–**	**VABF-S2-2-R7C2-C-10E**
	ZMY	4, reversible	0.5 ... 6	0.05 ... 0.6	52 mm	**–**	**VABF-S2-2-R7C2-C-6E**

1) These functions are only available via the pressure regulator configurator VABF-S2 for width 42 mm and 52 mm only (ISO 5599-2, ISO 1 and ISO 2)

Accessories – Pneumatic components

Ordering data – Vertical stacking for valves with central plug, VTSA-F-CB

	Code	Pressure regulation for port	Control range [bar]	[MPa]	Width	Part no.	Type
Regulator plate, width 18 mm							
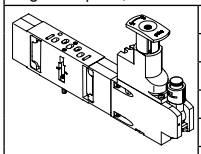	ZA	1	0.5 ... 8.5	0.05 ... 0.85	18 mm	**543526**	**VABF-S3-2-R1C2-C-10**
	ZF	1	0.5 ... 6	0.05 ... 0.6	18 mm	**543524**	**VABF-S3-2-R1C2-C-6**
	ZC	2	2 ... 8.5	0.2 ... 0.85	18 mm	**543534**	**VABF-S3-2-R2C2-C-10**
	ZH	2	2 ... 6	0.2 ... 0.6	18 mm	**543532**	**VABF-S3-2-R2C2-C-6**
	ZB	4	2 ... 8.5	0.2 ... 0.85	18 mm	**543530**	**VABF-S3-2-R3C2-C-10**
	ZG	4	2 ... 6	0.2 ... 0.6	18 mm	**543528**	**VABF-S3-2-R3C2-C-6**
	ZD	2 and 4	2 ... 8.5	0.2 ... 0.85	18 mm	**543538**	**VABF-S3-2-R4C2-C-10**
	ZI	2 and 4	2 ... 6	0.2 ... 0.6	18 mm	**543536**	**VABF-S3-2-R4C2-C-6**
	ZE	2 and 4, reversible	0.5 ... 8.5	0.05 ... 0.85	18 mm	**543542**	**VABF-S3-2-R5C2-C-10**
	ZJ	2 and 4, reversible	0.5 ... 6	0.05 ... 0.6	18 mm	**543540**	**VABF-S3-2-R5C2-C-6**
	ZL	2, reversible	0.5 ... 8.5	0.05 ... 0.85	18 mm	**546788**	**VABF-S3-2-R6C2-C-10**
	ZN	2, reversible	0.5 ... 6	0.05 ... 0.6	18 mm	**546786**	**VABF-S3-2-R6C2-C-6**
	ZK	4, reversible	0.5 ... 8.5	0.05 ... 0.85	18 mm	**546792**	**VABF-S3-2-R7C2-C-10**
	ZM	4, reversible	0.5 ... 6	0.05 ... 0.6	18 mm	**546790**	**VABF-S3-2-R7C2-C-6**
Regulator plate, width 26 mm							
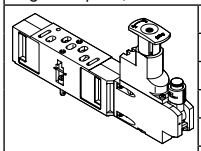	ZA	1	0.5 ... 8.5	0.05 ... 0.85	26 mm	**543527**	**VABF-S3-1-R1C2-C-10**
	ZF	1	0.5 ... 6	0.05 ... 0.6	26 mm	**543525**	**VABF-S3-1-R1C2-C-6**
	ZC	2	2 ... 8.5	0.2 ... 0.85	26 mm	**543535**	**VABF-S3-1-R2C2-C-10**
	ZH	2	2 ... 6	0.2 ... 0.6	26 mm	**543533**	**VABF-S3-1-R2C2-C-6**
	ZB	4	2 ... 8.5	0.2 ... 0.85	26 mm	**543531**	**VABF-S3-1-R3C2-C-10**
	ZG	4	2 ... 6	0.2 ... 0.6	26 mm	**543529**	**VABF-S3-1-R3C2-C-6**
	ZD	2 and 4	2 ... 8.5	0.2 ... 0.85	26 mm	**543539**	**VABF-S3-1-R4C2-C-10**
	ZI	2 and 4	2 ... 6	0.2 ... 0.6	26 mm	**543537**	**VABF-S3-1-R4C2-C-6**
	ZE	2 and 4, reversible	0.5 ... 8.5	0.05 ... 0.85	26 mm	**543543**	**VABF-S3-1-R5C2-C-10**
	ZJ	2 and 4, reversible	0.5 ... 6	0.05 ... 0.6	26 mm	**543541**	**VABF-S3-1-R5C2-C-6**
	ZL	2, reversible	0.5 ... 8.5	0.05 ... 0.85	26 mm	**546789**	**VABF-S3-1-R6C2-C-10**
	ZN	2, reversible	0.5 ... 6	0.05 ... 0.6	26 mm	**546787**	**VABF-S3-1-R6C2-C-6**
	ZK	4, reversible	0.5 ... 8.5	0.05 ... 0.85	26 mm	**546793**	**VABF-S3-1-R7C2-C-10**
	ZM	4, reversible	0.5 ... 6	0.05 ... 0.6	26 mm	**546791**	**VABF-S3-1-R7C2-C-6**
Regulator plate, width 42 mm							
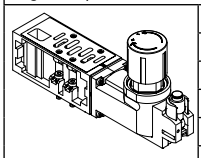	ZA	1	0.5 ... 10	0.05 ... 1	42 mm	**546818**	**VABF-S1-1-R1C2-C-10**
	ZF	1	0.5 ... 6	0.05 ... 0.6	42 mm	**546817**	**VABF-S1-1-R1C2-C-6**
	ZC	2	1.0 ... 10	0.1 ... 1	42 mm	**546822**	**VABF-S1-1-R2C2-C-10**
	ZH	2	1.0 ... 6	0.1 ... 0.6	42 mm	**546821**	**VABF-S1-1-R2C2-C-6**
	ZB	4	1.0 ... 10	0.1 ... 1	42 mm	**546820**	**VABF-S1-1-R3C2-C-10**
	ZG	4	0.5 ... 6	0.05 ... 0.6	42 mm	**546819**	**VABF-S1-1-R3C2-C-6**
	ZD	2 and 4	1.0 ... 10	0.1 ... 1	42 mm	**546824**	**VABF-S1-1-R4C2-C-10**
	ZI	2 and 4	1.0 ... 6	0.1 ... 0.6	42 mm	**546823**	**VABF-S1-1-R4C2-C-6**
	ZE	2 and 4, reversible	0.5 ... 10	0.05 ... 1	42 mm	**546826**	**VABF-S1-1-R5C2-C-10**
	ZJ	2 and 4, reversible	0.5 ... 6	0.05 ... 0.6	42 mm	**546825**	**VABF-S1-1-R5C2-C-6**
	ZL	2, reversible	0.5 ... 10	0.05 ... 1	42 mm	**546828**	**VABF-S1-1-R6C2-C-10**
	ZN	2, reversible	0.5 ... 6	0.05 ... 0.6	42 mm	**546827**	**VABF-S1-1-R6C2-C-6**
	ZK	4, reversible	0.5 ... 10	0.05 ... 1	42 mm	**546830**	**VABF-S1-1-R7C2-C-10**
	ZM	4, reversible	0.5 ... 6	0.05 ... 0.6	42 mm	**546829**	**VABF-S1-1-R7C2-C-6**

Accessories – Pneumatic components

Ordering data – Vertical stacking for valves with central plug, VTSA-F-CB

	Code	Pressure regulation for port	Control range [bar]	[MPa]	Width	Part no.	Type
Regulator plate, width 52 mm							
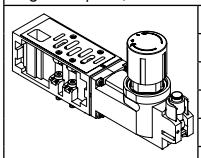	ZA	1	0.5 ... 10	0.05 ... 1	52 mm	**555758**	**VABF-S1-2-R1C2-C-10**
	ZF	1	0.5 ... 6	0.05 ... 0.6	52 mm	**555757**	**VABF-S1-2-R1C2-C-6**
	ZC	2	1.0 ... 10	0.1 ... 1	52 mm	**555760**	**VABF-S1-2-R2C2-C-10**
	ZH	2	1.0 ... 6	0.1 ... 0.6	52 mm	**555759**	**VABF-S1-2-R2C2-C-6**
	ZB	4	1.0 ... 10	0.1 ... 1	52 mm	**555762**	**VABF-S1-2-R3C2-C-10**
	ZG	4	1.0 ... 6	0.1 ... 0.6	52 mm	**555761**	**VABF-S1-2-R3C2-C-6**
	ZD	2 and 4	1.0 ... 10	0.1 ... 1	52 mm	**555764**	**VABF-S1-2-R4C2-C-10**
	ZI	2 and 4	1.0 ... 6	0.1 ... 0.6	52 mm	**555763**	**VABF-S1-2-R4C2-C-6**
	ZE	2 and 4, reversible	0.5 ... 10	0.05 ... 1	52 mm	**555766**	**VABF-S1-2-R5C2-C-10**
	ZJ	2 and 4, reversible	0.5 ... 6	0.05 ... 0.6	52 mm	**555765**	**VABF-S1-2-R5C2-C-6**
	ZL	2, reversible	0.5 ... 10	0.05 ... 1	52 mm	**555768**	**VABF-S1-2-R6C2-C-10**
	ZN	2, reversible	0.5 ... 6	0.05 ... 0.6	52 mm	**555767**	**VABF-S1-2-R6C2-C-6**
	ZK	4, reversible	0.5 ... 10	0.05 ... 1	52 mm	**555770**	**VABF-S1-2-R7C2-C-10**
	ZM	4, reversible	0.5 ... 6	0.05 ... 0.6	52 mm	**555769**	**VABF-S1-2-R7C2-C-6**

Ordering data

	Code	Description		Width	Part no.	Type
Pressure gauge						
	T	With cartridge connection for regulator, 10 bar	Scale in bar/psi, display range 0...16 bar/0...240 psi, for regulator plate code ZA, ZB, ZC, ZD, ZE, ZK, ZL	18 mm	**543487**	**PAGN-26-16-P10**
				26 mm		
				42 mm	**548010**	**PAGN-40-16-P10**
				52 mm		
	U	With cartridge connection for regulator, 6 bar,	Scale in bar/psi, display range 0...10 bar/0...145 psi, for regulator plate code ZF, ZG, ZH, ZI, ZJ, ZM, ZN	18 mm	**543488**	**PAGN-26-10-P10**
				26 mm		
				42 mm	**548009**	**PAGN-40-10-P10**
				52 mm		
	WT	With cartridge connection for regulator, 10 bar	Scale in MPa, display range 0...16 bar/0...1.6 MPa, for regulator plate code ZA, ZB, ZC, ZD, ZE, ZK, ZL	18 mm	**563735**	**PAGN-26-1.6M-P10**
				26 mm		
				42 mm	**563737**	**PAGN-40-1.6M-P10**
				52 mm		
	WU	With cartridge connection for regulator, 6 bar	Scale in MPa, display range 0...16 bar/0...1 MPa for regulator plate code ZF, ZG, ZH, ZI, ZJ, ZM, ZN	18 mm	**563736**	**PAGN-26-1M-P10**
				26 mm		
				42 mm	**563738**	**PAGN-40-1M-P10**
				52 mm		
	VT	With cartridge connection for regulator, 10 bar	Scale in psi/bar, display range 0...16 bar/0...232 psi for regulator plate code ZA, ZB, ZC, ZD, ZE, ZK, ZL	18 mm	**563731**	**PAGN-26-232P-P10**
				26 mm		
				42 mm	**563733**	**PAGN-40-232P-P10**
				52 mm		
	PS	With cartridge connection for regulator, 6 bar	Scale in psi/bar, display range 0...10 bar/0...145 psi for regulator plate code ZF, ZG, ZH, ZI, ZJ, ZM, ZN	18 mm	**563732**	**PAGN-26-145P-P10**
				26 mm		
				42 mm	**563734**	**PAGN-40-145P-P10**
				52 mm		
	SGR	Red-green scale, with cartridge connection for regulator, 6 bar	Scale in bar, display range 0...10 bar	18 mm	**8090378**	**PAGN-26-10-P10-RG**
				26 mm		

Accessories – Pneumatic components

Ordering data – Vertical stacking

	Code	Description		Part no.	Type
Cartridge for regulator plate					
	–	For tubing O.D. 4 mm	1 piece	**172972**	**QSP10-4**
	–	Adapter for pressure gauge (allows products with threaded connection G1/8 to be attached to the cartridge connection)	6 pieces	**565811**	**QSP10-G1/8**
Throttle plate					
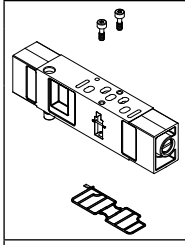	X	controls the flow of exhaust air downstream of the valve to ducts 3 and 5	18 mm	**540176**	**VABF-S4-2-F1B1-C**
			26 mm	**540175**	**VABF-S4-1-F1B1-C**
			42 mm	**546095**	**VABF-S2-1-F1B1-C**
			52 mm	**555789**	**VABF-S2-2-F1B1-C**
Throttle plate for valves with central plug, VTSA-F-CB					
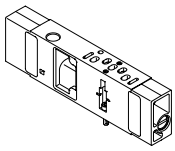	X	For port pattern to ISO 15407-2 and ISO 5599-2, controls the flow of exhaust air downstream of the valve to ducts 3 and 5	18 mm	**543603**	**VABF-S3-2-F1B1-C**
			26 mm	**543604**	**VABF-S3-1-F1B1-C**
			42 mm	**549102**	**VABF-S1-1-F1B1-C**
			52 mm	**555788**	**VABF-S1-2-F1B1-C**
Vertical pressure shut-off plate					
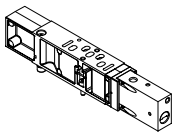	ZT	3/2-way valve for shutting off the operating pressure at the valve position Pressure separation can be shut off on the valve assembly	18 mm	**542884**	**VABF-S4-2-L1D1-C**
			26 mm	**542885**	**VABF-S4-1-L1D1-C**
			42 mm	**546096**	**VABF-S2-1-L1D1-C**
			52 mm	**555791**	**VABF-S2-2-L1D1-C**
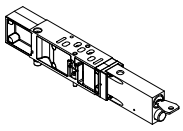	ZS	3/2-way valve for shutting off the operating pressure at the valve position Pressure separation can be shut off on the valve assembly using a key	18 mm	**8001178**	**VABF-S4-2-L1D2-C**
			26 mm	**8001179**	**VABF-S4-1-L1D2-C**
Vertical pressure shut-off plate for valves with central plug, VTSA-F-CB					
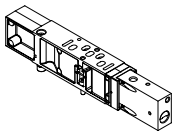	ZT	3/2-way valve for shutting off the operating pressure at the valve position Pressure separation can be shut off on the valve assembly	18 mm	**543601**	**VABF-S3-2-L1D1-C**
			26 mm	**543602**	**VABF-S3-1-L1D1-C**
			42 mm	**549103**	**VABF-S1-1-L1D1-C**
			52 mm	**555790**	**VABF-S1-2-L1D1-C**
Covering					
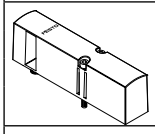	L	Cover plate for vacant position	18 mm	**539213**	**VABB-S4-2-WT**
			26 mm	**539212**	**VABB-S4-1-WT**
			42 mm	**543186**	**VABB-S2-1-WT**
			52 mm	**560845**	**VABB-S2-2-WT**
	–	Sealing cap for electrical links (with individual connection), size 18 mm and 26 mm	10 pieces	**547713**	**VABD-S4-E-C**
	–	Seal (with individual connection), Width 42 mm and 52 mm	2 pieces	**571343**	**VABD-S2-1-S-C**

Accessories – Pneumatic components

Ordering data – Accessories for valves with central plug, VTSA-F-CB

	Description		Part no.	Type
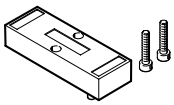	Cover plate to seal spare or vacant valve positions	18 mm	**161114**	**NDV-02-VDMA**
		26 mm	**161107**	**NDV-01-VDMA**
	Sealing cap for electrical links (with individual connection), size 18 mm and 26 mm	10 pieces	**547713**	**VABD-S4-E-C**
	Seal (with individual connection), Width 42 mm and 52 mm	2 pieces	**571343**	**VABD-S2-1-S-C**

Accessories – Electric components

Note

Multi-pin node supplied without cover. Please order appropriate cover with cable separately.

Ordering data	Code	Description	Width	Part no.	Type
Multi-pin node for VTSA/VTSA-F					
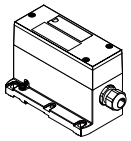	T	Terminal strip, 36-pin	–	**543412**	**VABE-S6-1LF-C-M1-C36M**
	MP1	Sub-D plug, 37-pin	–	**543414**	**VABE-S6-1LT-C-M1-S37**
	MP4	Round plug, 19-pin	–	**543415**	**VABE-S6-1LF-C-M1-R19**
Individual electrical connection for VTSA/VTSA-F					
	MP2	Multi-pin node with individual connection M12, 6-way	–	**549046**	**VABE-S6-LT-C-S6-R5**
	MP3	Multi-pin node with individual connection M12, 10-way	–	**549047**	**VABE-S6-LT-C-S10-R5**
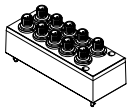	–	Cover for individual connection M12, 6-way	–	**549048**	**VAEM-S6-C-S6-R5**
	–	Cover for individual connection M12, 10-way	–	**549049**	**VAEM-S6-C-S10-R5**
Pneumatic interface for VTSA/VTSA-F					
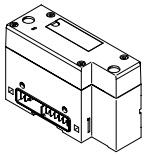	–	For electrical terminal CPX in polymer	50 mm	**543416**	**VABA-S6-1-X1**
	–	For electrical terminal CPX in metal	50 mm	**550663**	**VABA-S6-1-X2**
	–	For electrical terminal CPX in metal, with changed diagnostic function	50 mm	**573613**	**VABA-S6-1-X2-D**
Pneumatic interface for VTSA-F-CB					
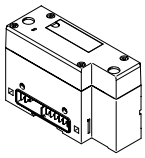	RA	For electrical terminal CPX in polymer • Integrated diagnostics (short circuit and undervoltage of valves, wire break per solenoid coil)	50 mm	**8082877**	**VABA-S6-1-X1-CB**
		For electrical terminal CPX in metal • Integrated diagnostics (short circuit and undervoltage of valves, wire break per solenoid coil)	50 mm	**8082876**	**VABA-S6-1-X2-CB**
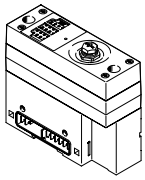	RD	For electrical terminal CPX (interface for PROFIsafe only) in metal with • 2 safe voltage zones and • 1 safe output (connection: M12) • Integrated diagnostics (short circuit and undervoltage of valves, wire break per solenoid coil)	50 mm	**8068241**	**VABA-S6-1-X2-F2-CB**
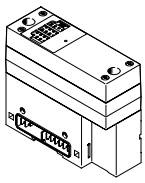	RC	For electrical terminal CPX (interface for PROFIsafe only) in metal with • 3 safe voltage zones • Integrated diagnostics (short circuit and undervoltage of valves, wire break per solenoid coil)	50 mm	**8068240**	**VABA-S6-1-X2-F1-CB**
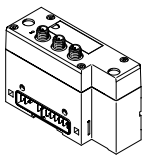	RB	For electrical terminal CPX (interface for fieldbus only) in polymer • With 3 voltage zones • With external power supply 3xM12 • Integrated diagnostics (short circuit and undervoltage of valves, wire break per solenoid coil)	50 mm	**8082879**	**VABA-S6-1-X1-3V-CB**
	RB	For electrical terminal CPX (interface for fieldbus only) in metal • With 3 voltage zones • With external power supply 3xM12 • Integrated diagnostics (short circuit and undervoltage of valves, wire break per solenoid coil)	50 mm	**8082878**	**VABA-S6-1-X2-3V-CB**

Accessories – Electric components

Ordering data	Code	Description	Part no.	Type
Electrical interface IO-Link				
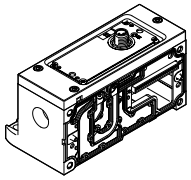	–	Interfaz IO-Link, for 16 valve positions	**8152353**	**VABA-S6-1-PT**
Pneumatic interface for VTSA-F-CB				
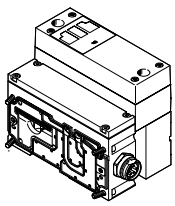	XB	CPX pneumatic interface with adapter plate on left, for expansion with 3 external power supplies for the zones	**8152438**	**VABA-S6-1-X2-3V-CB-AL**
	XC	CPX pneumatic interface with adapter plate on left, for expansion with 3 safe internal zones (PROFIsafe)	**8152437**	**VABA-S6-1-X2-F1-CB-AL**
	XD	CPX pneumatic interface with adapter plate on left, for expansion with 2 safe internal zones + 1 safe output (PROFIsafe)	**8152436**	**VABA-S6-1-X2-F2-CB-AL**
	PC	CPX pneumatic interface with adapter plate on left and additional power supply, for expansion with 3 safe internal zones (PROFIsafe)	**8152435**	**VABA-S6-1-X2-F1-CB2-AL**
	PD	CPX pneumatic interface with adapter plate on left and additional power supply, for extension with 2 safe internal zones + 1 safe output (PROFIsafe)	**8152434**	**VABA-S6-1-X2-F2-CB2-AL**
Electrical interface for AS-Interface for VTSA/VTSA-F				
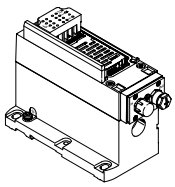	–	4 inputs/4 outputs	**549042**	**VABE-S6-1LF-C-A4-E**
	–	8 inputs/8 outputs	**549043**	**VABE-S6-1LF-C-A8-E**
AS-Interface module for VTSA/VTSA-F				
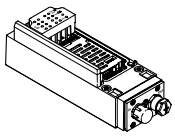	–	4 inputs/4 outputs	**549044**	**VAEM-S6-S-FAS-4-4E**
	–	8 inputs/8 outputs	**549045**	**VAEM-S6-S-FAS-8-8E**
Connection block for AS-Interface for VTSA/VTSA-F				
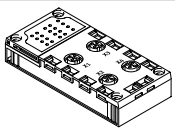	X	4x M12, 5-pin, double, socket	**195704**	**CPX-AB-4-M12x2-5POL**
	GW	4x M12, 5-pin, socket, metal thread	**541254**	**CPX-AB-4-M12x2-5POL-R**
	R	8x M8, 3-pin, socket	**195706**	**CPX-AB-8-M8-3POL**
	J	8x spring-loaded terminal, Cage Clamp®, 4-pin	**195708**	**CPX-AB-8-KL-4POL**
	B	Sub-D, 25-pin, socket	**525676**	**CPX-AB-1-SUB-BU-25POL**

Accessories – Electric components

Ordering data

	Description		Part no.	Type
Connecting cable for electrical connection of individual valves with central plug, VSTA-F-CB				
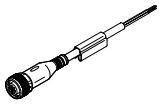	• Straight socket, 1xM12, 5-pin • Open end, 4-core	5 m	**541328**	**NEBU-M12G5-K-5-LE4**
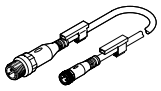	• Straight socket, 1xM8, 3-pin • Straight plug 1xM12, 3-pin • With 2x inscription label holders	0.5 m	**8000209**	**NEBU-M8G3-K-0.5-M12G3**
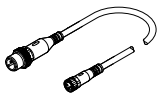	• Straight socket, 1xM8, 3-pin • Straight plug 1xM12, 3-pin • Without inscription label holder	1 m	**8091512**	**NEBU-M8G3-K-1-N-M12G3**
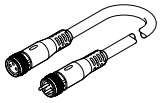	Modular system for a choice of connecting cables	–	**–**	**NEBU-...** ➔ Internet: nebu

Accessories – General

Ordering data

	Code	Description		Part no.	Type
Connecting cable, Sub-D (TPE-U(PUR), IP65)					
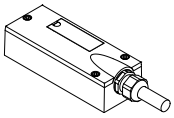	GA	Connecting cable for max. 8 solenoid coils, 10-core	2.5 m	**539240**	**NEBV-S1W37-E-2.5-LE10**
	GB		5 m	**539241**	**NEBV-S1W37-E-5-LE10**
	GC		10 m	**539242**	**NEBV-S1W37-E-10-LE10**
	GD	Connecting cable for max. 22 solenoid coils, 26-core	2.5 m	**539243**	**NEBV-S1W37-E-2.5-LE26**
	GE		5 m	**539244**	**NEBV-S1W37-E-5-LE26**
	GF		10 m	**539245**	**NEBV-S1W37-E-10-LE26**
	GG	Connecting cable for max. 32 solenoid coils, 37-core	2.5 m	**539246**	**NEBV-S1W37-K-2.5-LE37**
	GH		5 m	**539247**	**NEBV-S1W37-K-5-LE37**
	GI		10 m	**539248**	**NEBV-S1W37-K-10-LE37**
Connecting cable, Sub-D (PVC, IP65)					
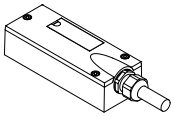	GK	Connecting cable for max. 8 solenoid coils, 10-core	2.5 m	**543271**	**NEBV-S1W37-KM-2.5-LE10**
	GL		5 m	**543272**	**NEBV-S1W37-KM-5-LE10**
	GM		10 m	**543273**	**NEBV-S1W37-KM-10-LE10**
	GN	Connecting cable for max. 23 solenoid coils, 27-core	2.5 m	**543274**	**NEBV-S1W37-KM-2.5-LE27**
	GO		5 m	**543275**	**NEBV-S1W37-KM-5-LE27**
	GP		10 m	**543276**	**NEBV-S1W37-KM-10-LE27**
	GQ	Connecting cable for max. 32 solenoid coils, 37-core	2.5 m	**543277**	**NEBV-S1W37-KM-2.5-LE37**
	GR		5 m	**543278**	**NEBV-S1W37-KM-5-LE37**
	GS		10 m	**543279**	**NEBV-S1W37-KM-10-LE37**
Cover for multi-pin plug for VTSA/VTSA-F					
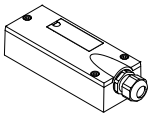	–	For configuration by the user		**545974**	**NECV-S1W37**

Ordering data – End plates

	Code	Description	Part no.	Type
Right, with threaded connection				
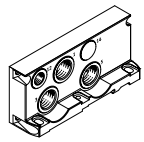	V	With working air/exhaust air, internal pilot air supply, G1/2 (no port 14)	**539234**	**VABE-S6-1R-G12**
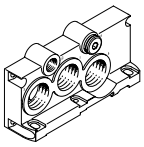	V1	With working air/exhaust air, internal pilot air supply, G3/4 (port 14 is sealed with a blanking plug)	**560837**	**VABE-S6-2R-G34**
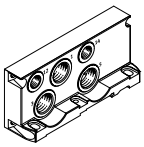	X	With working air/exhaust air, external pilot air supply, G1/2	**539236**	**VABE-S6-1RZ-G12**
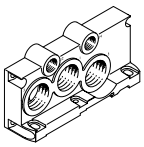	X1	With working air/exhaust air, external pilot air supply, G3/4	**560839**	**VABE-S6-2RZ-G34**
With pilot air selector				
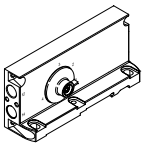	Y[1]	Internal pilot air supply	**539238**	**VABE-S6-1RZ-G-B1**
	U[1]	Internal pilot air supply, ducted pilot exhaust air		
	Z[1]	External pilot air supply		
	W[1]	External pilot air supply, ducted pilot exhaust air		

1) Code letter within the order code for a valve terminal configuration

Accessories – General

Ordering data – Duct separation/seal

	Code	Description	Weight	Part no.	Type
	S	Duct separation 1, 3, 5	57 g	**539228**	**VABD-S6-1-P3-C**
	T	Duct separation 1	43 g	**539227**	**VABD-S6-1-P1-C**
	R	Duct separation 3, 5	54 g	**539229**	**VABD-S6-1-P2-C**
	L	Seal between sub-bases, duct 1, 3, 5 open, port 14 blocked (colour coding: white)	40 g	**573191**	**VABD-S6-1-P7-C**
	TL	Seal between sub-bases, duct 1 blocked, port 14 blocked (colour coding: red) Note: additional pilot air supply required	43 g	**8060483**	**VABD-S6-1-P8-C**
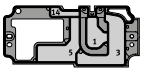	K	Seal between sub-bases, duct 1, 3, 5 blocked, port 14 blocked (colour coding: green)	57 g	**8034612**	**VABD-S6-1-P6-C**

Ordering data

	Code	Description		Part no.	Type
Cover caps					
	N	Cover cap for manual override, non-detenting	10 pieces	**541010**	**VAMC-S6-CH**
	V	Cover cap for manual override, concealed	10 pieces	**541011**	**VAMC-S6-CS**
	A	Cover cap, heavy duty, for manual override, non-detenting heavy duty, detenting via accessory (key) (The cover cap is provided for one-off mounting only)	10 pieces	**4105147**	**VAMC-B-S6-CTR**
Accessories for manual override, heavy duty					
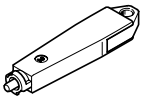	–	Coded key (accessory) for actuating the cover cap, heavy duty, for detenting position (VAMC-B-S6-CTR)	1 piece	**1662543**	**AHB-MEB-B**

Note

There is a wide range of preconfigured solenoid valves with cover cap for manual override and correct valve type code available to order in the sections on solenoid valves.

Accessories – General

Ordering data

	Code	Description		Part no.	Type
Inscription label holders/inscription labels					
	B	Clip-on inscription label holder for valve cap	5 pieces	**540888**	**ASCF-T-S6**
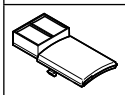	BZ	Clip-on inscription label holder for valve cap with additional text fields (electrical and pneumatic zone separation)	4 pieces	**8106532**	**ASCF-T-S6-Z**
	T	Inscription label holder for manifold blocks/manifold sub-bases VTSA/VTSA-F	5 pieces	**540889**	**ASCF-M-S6**
	TD	Inscription label holder for manifold blocks/manifold sub-bases VTSA/VTSA-F, size 52 mm	5 pieces	**562577**	**ASCF-M-S2-2**
		Identification clip for manifold blocks/manifold sub-bases VTSA-F-CB (code A, B, C, E, F, G, PV, PS)		**8110689**	**ASCF-M-S6-1**
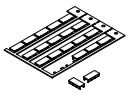	–	Inscription label for ISO 15407 valves with individual electrical connection (20 labels in frames)	20 pieces	**18182**	**IBS-9x20**
	–	Inscription label for pressure zone separation • 4 inscription labels, duct 1/3/5 blocked • 4 inscription labels, duct 1 blocked • 4 inscription labels, duct 3/5 blocked	3x4 pieces	**8003303**	**ASLR-L-S6-2016**
H-rail mounting					
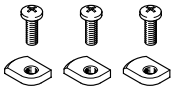	–	VTSA and VTSA-F	3 pieces	**526032**	**CPX-CPA-BG-NRH**
Wall mounting					
	–	Mounting bracket with a mounting hole for M5 screw	5 pieces	**539214**	**VAME-S6-10-W**
	U	Mounting bracket with a mounting hole for M4 screw and a mounting hole for M6 screw	1 piece	**567038**	**VAME-S6-W-M46**
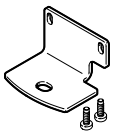	AW	Mounting bracket for length compensation on the CPX side when mounting using support system Set comprising 1 angle bracket and 2 screws	1 piece	**2721419**	**CPX-M-BG-VT-2X**
User documentation					
	D	User documentation for valve terminal VTSA/VTSA-F	German	**538922**	**VTSA/VTSA-F-DE**
	E		English	**538923**	**VTSA/VTSA-F-EN**
	S		Spanish	**538924**	**VTSA/VTSA-F-ES**
	F		French	**538925**	**VTSA/VTSA-F-FR**
	I		Italian	**538926**	**VTSA/VTSA-F-IT**

Pneumatic connection accessories

A selection of possible fittings, blanking plugs, silencers and
other pneumatic accessories can be found in the chapter **Accessories** → page 260
or on the website via the individual search terms:
Internet → connection technology, silencer, blanking plug

Datasheet – Solenoid valve with switching position sensing

Function1)
Valves with code SO, SQ, SS,
width 18 mm

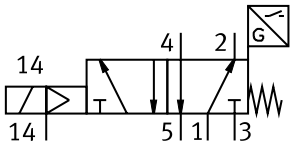

Valves with code SO, SQ, SS,
width 26 mm

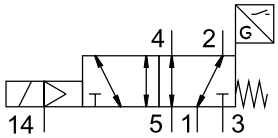

Flow rate
up to 1100 l/min

Valve width
18 mm
26 mm

Voltage
24 V DC

Operating pressure
3 ... 10 bar
0.3 ... 1 MPa

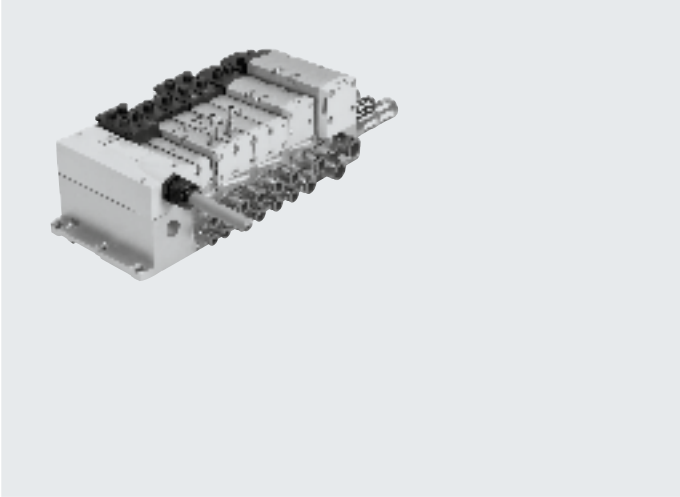

ISO valves with switching position sensing for safety-related pneumatic components

Function

The single solenoid 5/2-way valve with spring return in width 18 mm and 26 mm features valve diagnostics. It is available as a valve with plug-in or individual connection with pilot valves to ISO 15218 and square plug type C.

The normal position of the piston spool is monitored by the inductive sensor.
This valve is not a safety device in accordance with the Machinery Directive 2006/42/EC. When used in higher categories, the sensor signal from the valve must be evaluated by the control system.

This valve is suitable for use in safety-related parts of control systems to EN ISO 13849-1.
The control block has been developed and manufactured in accordance with the basic and proven safety principles of EN ISO 13849-2.

This valve is designed for installation in machines and automation systems and must only be used in industrial applications (high-demand mode).

Decentralised individual connection variant

Valve on individual sub-base (square plug or plug-in) with integrated switching position sensing.

The electrical connection is established via either a standardised 4-pin M12 plug 24 V DC (ISO 15407-2), a 4-pin spring-loaded terminal or a cable (open end) 24 V DC, which can be configured by the user.

The individual sub-base can be supplied with internal or external pilot air depending on the version.

Variant for valve terminal VTSA/VTSA-F

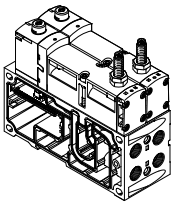

The valves with integrated switching position sensing in plug-in design for valve terminal VTSA/VTSA-F/VTSA-F-CB can be used regardless of the type of electrical actuation (individual, multi-pin plug or fieldbus/control block connection).

Pilot air supply:
The valve terminal can be supplied with internal or external pilot air via the various end plate variants.

Note
Valves in plug-in design are always supplied with pilot air via duct 14 in the manifold sub-base.

1) The circuit symbol represents a valve with a proximity switch with a N/O switching output signal. In accordance with ISO 1219-1, this symbol is used for both N/O and N/C. The switching element function of the sensors used here is designed as an N/C contact.

Note
Pilot exhaust air port 12 is exhausted directly at the valve, without a connection.
If the customer requests a "turned seal", exhaust air is vented at the end plates of the valve terminal, which doesn't conform to the ISO standard.

Datasheet – Solenoid valve with switching position sensing

Safety characteristics	
Conforms to	EN 13849-1/2
CE marking (see declaration of conformity)	To EU EMC Directive [1]
Shock resistance	Shock test with severity level 2, to EN 60068-2-27
Vibration resistance	Transport application test with severity level 2, to EN 60068-2-6

1) For information about the area of use, see the EC declaration of conformity at: www.festo.com/sp ➔ Certificates.
If the devices are subject to usage restrictions in residential, commercial or light-industrial environments, further measures for the reduction of the emitted interference may be necessary.

Safety characteristics		
Valve function 5/2-way, single solenoid	Test pulses	
	Max. positive test pulse with logic 0 [µs]	Max. negative test pulse with logic 1 [µs]
VSVA-B-M52-MZ...-A1-1T1L- ...	1200	1100
VSVA-B-M52-MZ...-A2-1T1L- ...	1500	800
VSVA-B-M52-MZ-A1-1C1- ...	1800	800

General technical data			
Valve	VSVA-B-M52-MZD-A2-1T1L-...	VSVA-B-M52-MZD-A1-1T1L-...	VSVA-B-M52-MZ-A1-1C1-...
Width	**18 mm**	**26 mm**	**26 mm**
Conforms to	ISO 15407-2		ISO 15407-1
Design	Piston spool valve		
Sealing principle	Soft		
Actuation type	Electrical		
Type of actuation	Piloted		
Exhaust function, can be throttled	Via individual sub-base, via throttle plate		
Lubrication	Lifetime lubrication		
Type of mounting	Via through-hole, on manifold sub-base		
Mounting position	Any		
Manual override	Concealed		
Individual sub-base			**➔ Page 246**
Valve terminal			**➔ Page 79**

Standard nominal flow rate [l/min]				
Valve function	Flow rate			
	Valve	Valve on valve terminal VTSA	Valve on valve terminal VTSA-F	Valve on individual sub-base
VSVA-B-M52-M...-A1-1C1-ANC	1400	1100	–	1100
VSVA-B-M52-M...-A1-1C1-ANP	1400	1100	–	1100
VSVA-B-M52-M...-A1-1C1-APC	1400	1100	–	1100
VSVA-B-M52-M...-A1-1C1-APP	1400	1100	–	1100
VSVA-B-M52-M...-A1-1T1L-ANC	1400	1100	1350	1200
VSVA-B-M52-M...-A1-1T1L-ANP	1400	1100	1350	1200
VSVA-B-M52-M...-A1-1T1L-APC	1400	1100	1350	1200
VSVA-B-M52-M...-A1-1T1L-APP	1400	1100	1350	1200
VSVA-B-M52-M...-A1-1T1L-APX-0.5	1400	1100	1350	1200
VSVA-B-M52-M...-A2-1T1L-ANP	750	550	700	600
VSVA-B-M52-M...-A2-1T1L-APP	750	550	700	600
VSVA-B-M52-M...-A2-1T1L-APX-0.5	750	550	700	600

Datasheet – Solenoid valve with switching position sensing

Valve switching times [ms]				
Valve		VSVA-B-M52-MZD-A2-1T1L-...	VSVA-B-M52-MZD-A1-1T1L-...	VSVA-B-M52-MZ-A1-1C1-...
Width		**18 mm**	**26 mm**	**26 mm**
Valve switching times	On	12	20	21
	Off	38	54	41
Sensor switching times	On	32	60	60
	Off	9	11	11

Electrical data for valve				
Valve		VSVA-B-M52-MZD-A2-1T1L-...	VSVA-B-M52-MZD-A1-1T1L-...	VSVA-B-M52-MZ-A1-1C1-...
Width		**18 mm**	**26 mm**	**26 mm**
Electrical connection		4-pin plug to ISO 15407-2		Plug to EN 175301-803, type C, without PE conductor
Nominal operating voltage	[V DC]	24		
Permissible voltage fluctuations	[%]	±10		-15/+10
Surge resistance	[kV]	2.5		
Pollution degree		3		
Power consumption	[W]	1.6		1.8
Switching position sensing		Normal position via sensor		
Duty cycle	[%]	100		
Degree of protection to EN 60529		IP65, NEMA 4 (for all types of signal transmission when mounted)		
Signal status display		LED		Via accessories

Electrical data for sensor		
Electrical connection		Cable, 3-core
		1xM8 plug, 3-pin
Cable length	[m]	2.5
Switching output		PNP or NPN
Switching element function		N/C
Switching status indication		Yellow LED
Operating voltage range	[V DC]	10 ... 30
Residual ripple	[%]	±10
Sensor no-load supply current	[mA]	≤10
Max. output current	[mA]	200
Voltage drop	[V]	≤2
Max. switching frequency	[Hz]	5000
Short circuit current rating		Clocked
Reverse polarity protection for sensor		For all electrical connections
Measuring principle		Inductive
Switching position sensing		Valve normal position via sensor

Datasheet – Solenoid valve with switching position sensing

Operating and environmental conditions			
Valve		VSVA-B-M52-...-1T1L-...	VSVA-B-M52-...-1C1-...
Operating medium		Compressed air to ISO 8573-1:2010 [7:4:4]	
Notes on operating/ Pilot medium		Lubricated operation possible (in which case lubricated operation will always be required)	
Operating pressure	[bar]	–0.9 ... 10	–0.9 ... 16
	[MPa]	–0.09 ... 1	–0.09 ... 1.6
Operating pressure for valve terminal with internal pilot air supply	[bar]	3 ... 10	
	[MPa]	0.3 ... 1	
Pilot pressure	[bar]	3 ... 10	
	[MPa]	0.3 ... 1	
Ambient temperature	[°C]	–5 ... +50	
Temperature of medium	[°C]	–5 ... +50	
Note on materials		RoHS-compliant	
Noise level LpA	[dB(A)]	85	
CE marking (see declaration of conformity)		To EU EMC Directive[1)]	
UKCA marking (see declaration of conformity)		To UK instructions for EMC[1)]	
KC marking		KC EMC	
Certification		C-Tick	C-Tick
		c UL us - Recognized (OL)	–

1) For information about the area of use, see the EC declaration of conformity at: www.festo.com/catalogue/... ➔ Support/Downloads.
If the devices are subject to usage restrictions in residential, commercial or light-industrial environments, further measures for the reduction of the emitted interference may be necessary.

Materials	
Sub-base/manifold sub-base	Die-cast aluminium
Valve	Die-cast aluminium, PA
Seals	FPM, NBR
Screws	Galvanised steel
Sensor housing	High-alloy stainless steel
Sensor cable sheath	TPE-U(PUR)

Product weight [g]		
Width	18 mm	26 mm
5/2-way solenoid valve type		
VSVA-B-M52-M...-A2-1T1L-APX-0.5	157	–
VSVA-B-M52-M...-A2-1T1L-APP	140	–
VSVA-B-M52-M...-A2-1T1L-ANP	140	–
VSVA-B-M52-M...-A1-1T1L-APC	–	307
VSVA-B-M52-M...-A1-1T1L-APP	–	264
VSVA-B-M52-M...-A1-1C1-APC	–	332
VSVA-B-M52-M...-A1-1C1-APP	–	289
VSVA-B-M52-M...-A1-1T1L-ANC	–	307
VSVA-B-M52-M...-A1-1T1L-ANP	–	264
VSVA-B-M52-M...-A1-1C1-ANC	–	332
VSVA-B-M52-M...-A1-1C1-ANP	–	289
VSVA-B-M52-M...-A1-1T1L-APX-0.5	–	281
Individual connection		
Individual sub-base	192	302

Datasheet – Solenoid valve with switching position sensing

Dimensions Download CAD data ➔ www.festo.com

Solenoid valve with sensor, width 26 mm

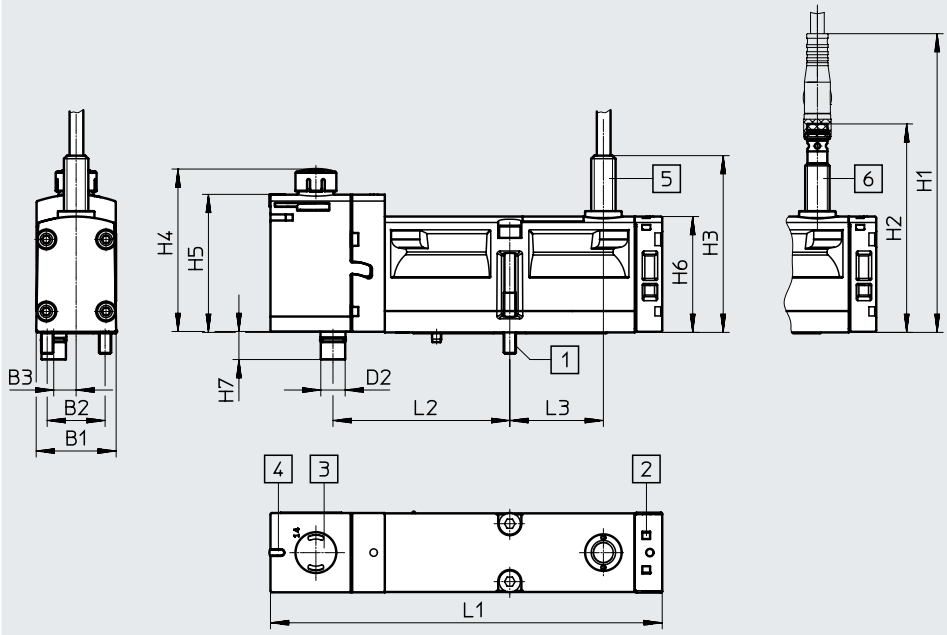

[1] Captive socket head screw M4x38
[2] Space for inscription label
[3] Manual override
[4] Light emitting diode
[5] Sensor with connecting cable
[6] Sensor with plug

Type	B1	B2	B3	D2	L1	L2	L3
VSVA-B-M52-MZD-A1-1T1L-...	26.2	19	7.4	8	128.9	58	30.7
VSVA-B-M52-MZD-A1-1T1L-APX-0.5							

Type	H1	H2	H3	H4	H5	H6	H7
VSVA-B-M52-MZD-A1-1T1L-...	98	68.2	58	52.5	45.3	38	9.2
VSVA-B-M52-MZD-A1-1T1L-APX-0.5							

Datasheet – Solenoid valve with switching position sensing

Dimensions Download CAD data ➔ www.festo.com

Solenoid valve with sensor, with plug type C, width 26 mm

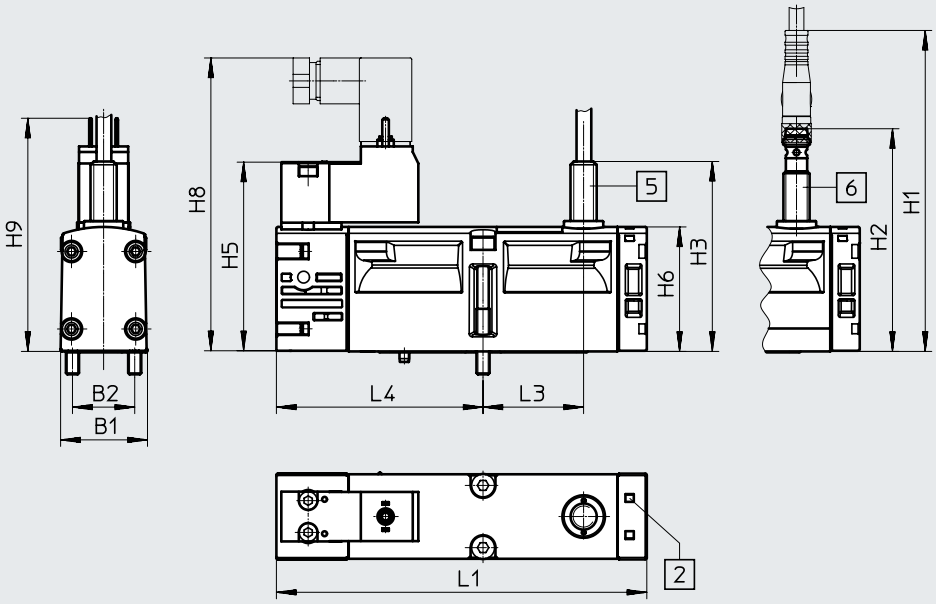

[1] Captive socket head screw M4x38
[2] Space for inscription label
[5] Sensor with connecting cable
[6] Sensor with plug

Type	B1	B2	L1	L3	L4
VSVA-B-M52-MZ-A1-1C1-...	26.2	19	113.1	30.7	63.1

Type	H1	H2	H3	H5	H6	H8	H9
VSVA-B-M52-MZ-A1-1C1-...	98	68.2	58	57.8	38	89.6	71.2

Ordering data – Solenoid valve with switching position sensing

Ordering data – Solenoid valve VSVA, MO non-detenting/detenting (D)

	Code	Valve function	Width	Part no.	Type
5/2-way solenoid valve, 24 V DC, plug-in design for valve terminal VTSA/VTSA-F with proximity switch					
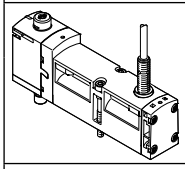	–	5/2-way valve, single solenoid, mechanical spring return, inductive sensor with PNP output and cable, 3-core, 2.5 m	26 mm	**560723**	**VSVA-B-M52-MZD-A1-1T1L-APC**
	–	5/2-way valve, single solenoid, mechanical spring return, inductive sensor with NPN output and cable, 3-core, 2.5 m	26 mm	**560742**	**VSVA-B-M52-MZD-A1-1T1L-ANC**
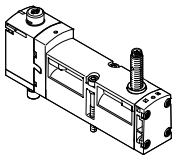	SS	5/2-way valve, single solenoid, mechanical spring return, inductive sensor with PNP output with 0.5 m connecting cable and 4-pin sensor push-in connector M12x1	18 mm	**573201**	**VSVA-B-M52-MZD-A2-1T1L-APX-0.5**
			26 mm	**570850**	**VSVA-B-M52-MZD-A1-1T1L-APX-0.5**
	SO	5/2-way valve, single solenoid, mechanical spring return, inductive sensor with PNP output and 3-pin sensor push-in connector M8x1	18 mm	**573202**	**VSVA-B-M52-MZD-A2-1T1L-APP**
			26 mm	**560724**	**VSVA-B-M52-MZD-A1-1T1L-APP**
	SQ	5/2-way valve, single solenoid, mechanical spring return, inductive sensor with NPN output and 3-pin sensor push-in connector M8x1	18 mm	**573203**	**VSVA-B-M52-MZD-A2-1T1L-ANP**
			26 mm	**560743**	**VSVA-B-M52-MZD-A1-1T1L-ANP**

Ordering data – Solenoid valve VSVA with cover cap for MO non-detenting/heavy duty, detenting via accessory (TR)

	Code	Valve function	Width	Part no.	Type
5/2-way solenoid valve, 24 V DC, plug-in design for valve terminal VTSA/VTSA-F with proximity switch					
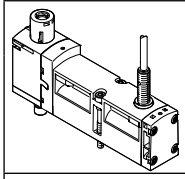	–	5/2-way valve, single solenoid, mechanical spring return, inductive sensor with PNP output and cable, 3-core, 2.5 m	26 mm	**8033026**	**VSVA-B-M52-MZTR-A1-1T1L-APC**
	–	5/2-way valve, single solenoid, mechanical spring return, inductive sensor with NPN output and cable, 3-core, 2.5 m	26 mm	**8033030**	**VSVA-B-M52-MZTR-A1-1T1L-ANC**
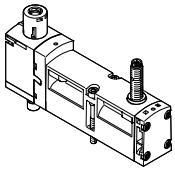	SS	5/2-way valve, single solenoid, mechanical spring return, inductive sensor with PNP output with 0.5 m connecting cable and 4-pin sensor push-in connector M12x1	18 mm	**8033459**	**VSVA-B-M52-MZTR-A2-1T1L-APX-0.5**
			26 mm	**8033034**	**VSVA-B-M52-MZTR-A1-1T1L-APX-0.5**
	SO	5/2-way valve, single solenoid, mechanical spring return, inductive sensor with PNP output and 3-pin sensor push-in connector M8x1	18 mm	**8033460**	**VSVA-B-M52-MZTR-A2-1T1L-APP**
			26 mm	**8033027**	**VSVA-B-M52-MZTR-A1-1T1L-APP**
	SQ	5/2-way valve, single solenoid, mechanical spring return, inductive sensor with NPN output and 3-pin sensor push-in connector M8x1	18 mm	**8033461**	**VSVA-B-M52-MZTR-A2-1T1L-ANP**
			26 mm	**8033031**	**VSVA-B-M52-MZTR-A1-1T1L-ANP**

Ordering data – Solenoid valve with switching position sensing

Ordering data – Solenoid valve VSVA with cover cap for MO, non-detenting (H)

	Code	Valve function	Width	Part no.	Type
5/2-way solenoid valve, 24 V DC, plug-in design for valve terminal VTSA/VTSA-F with proximity switch					
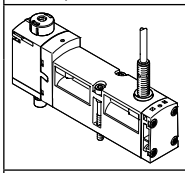	–	5/2-way valve, single solenoid, mechanical spring return, inductive sensor with PNP output and cable, 3-core, 2.5 m	26 mm	**8033049**	**VSVA-B-M52-MZH-A1-1T1L-APC**
	–	5/2-way valve, single solenoid, mechanical spring return, inductive sensor with NPN output and cable, 3-core, 2.5 m	26 mm	**8033053**	**VSVA-B-M52-MZH-A1-1T1L-ANC**
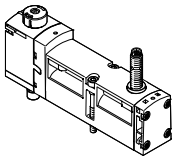	SS	5/2-way valve, single solenoid, mechanical spring return, inductive sensor with PNP output with 0.5 m connecting cable and 4-pin sensor push-in connector M12x1	18 mm	**8033477**	**VSVA-B-M52-MZH-A2-1T1L-APX-0.5**
			26 mm	**8033057**	**VSVA-B-M52-MZH-A1-1T1L-APX-0.5**
	SO	5/2-way valve, single solenoid, mechanical spring return, inductive sensor with PNP output and 3-pin sensor push-in connector M8x1	18 mm	**8033478**	**VSVA-B-M52-MZH-A2-1T1L-APP**
			26 mm	**8033050**	**VSVA-B-M52-MZH-A1-1T1L-APP**
	SQ	5/2-way valve, single solenoid, mechanical spring return, inductive sensor with NPN output and 3-pin sensor push-in connector M8x1	18 mm	**8033479**	**VSVA-B-M52-MZH-A2-1T1L-ANP**
			26 mm	**8033054**	**VSVA-B-M52-MZH-A1-1T1L-ANP**

Ordering data – Solenoid valve VSVA with cover cap for MO, concealed

	Code	Valve function	Width	Part no.	Type
5/2-way solenoid valve, 24 V DC, plug-in design for valve terminal VTSA/VTSA-F with proximity switch					
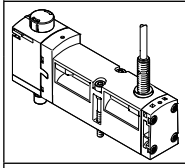	–	5/2-way valve, single solenoid, mechanical spring return, inductive sensor with PNP output and cable, 3-core, 2.5 m	26 mm	**8033072**	**VSVA-B-M52-MZ-A1-1T1L-APC**
	–	5/2-way valve, single solenoid, mechanical spring return, inductive sensor with NPN output and cable, 3-core, 2.5 m	26 mm	**8033076**	**VSVA-B-M52-MZ-A1-1T1L-ANC**
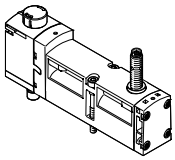	SS	5/2-way valve, single solenoid, mechanical spring return, inductive sensor with PNP output with 0.5 m connecting cable and 4-pin sensor push-in connector M12x1	18 mm	**8033495**	**VSVA-B-M52-MZ-A2-1T1L-APX-0.5**
			26 mm	**8033080**	**VSVA-B-M52-MZ-A1-1T1L-APX-0.5**
	SO	5/2-way valve, single solenoid, mechanical spring return, inductive sensor with PNP output and 3-pin sensor push-in connector M8x1	18 mm	**8033496**	**VSVA-B-M52-MZ-A2-1T1L-APP**
			26 mm	**8033073**	**VSVA-B-M52-MZ-A1-1T1L-APP**
	SQ	5/2-way valve, single solenoid, mechanical spring return, inductive sensor with NPN output and 3-pin sensor push-in connector M8x1	18 mm	**8033497**	**VSVA-B-M52-MZ-A2-1T1L-ANP**
			26 mm	**8033077**	**VSVA-B-M52-MZ-A1-1T1L-ANP**

Ordering data – Solenoid valve with switching position sensing

Ordering data	Code	Valve function	Width	Part no.	Type
Solenoid valves, 24 V DC, with pneumatic interface to ISO 15218 for individual sub-base					
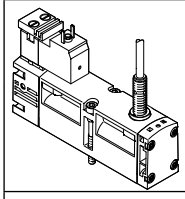	–	5/2-way valve, single solenoid, mechanical spring return, inductive sensor with PNP output and cable, 3-core, 2.5 m, electrical connection to EN 175301-803, type C	26 mm	**560725**	**VSVA-B-M52-MZ-A1-1C1-APC**
	–	5/2-way valve, single solenoid, mechanical spring return, inductive sensor with NPN output and cable, 3-core, 2.5 m, electrical connection to EN 175301-803, type C	26 mm	**560744**	**VSVA-B-M52-MZ-A1-1C1-ANC**
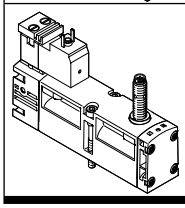	–	5/2-way valve, single solenoid, mechanical spring return, inductive sensor with PNP output and 3-pin sensor push-in connector M8x1, electrical connection to EN 175301-803, type C	26 mm	**560726**	**VSVA-B-M52-MZ-A1-1C1-APP**
	–	5/2-way valve, single solenoid, mechanical spring return, inductive sensor with NPN output and 3-pin sensor push-in connector M8x1, electrical connection to EN 175301-803, type C	26 mm	**560745**	**VSVA-B-M52-MZ-A1-1C1-ANP**

Note

- The sensors integrated in the valves must not be replaced by the customer. Incorrect assembly can result in malfunctions or damage to the valve. Return the module to Festo for repair in the event of a fault.
- Valves with switching position sensing from the VSVA-B-M52-... series can only be ordered individually. If these are used on a valve terminal, appropriate vacant positions must be provided for them. Exceptions are the valves with ident. code SS, SO and SQ.

Accessories – Solenoid valve with switching position sensing

Ordering data	Code	Description			Part no.	Type
Individual sub-base, port pattern to ISO 15407-2, electrical connection via plug M12						
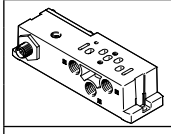	–	Threaded connection, internal pilot air supply, lateral connections	G1/8	18 mm	**541070**	**VABS-S4-2S-G18-B-R3**
			G1/4	26 mm	**541069**	**VABS-S4-1S-G14-B-R3**
	–	Threaded connection, external pilot air supply, lateral connections	G1/8	18 mm	**541064**	**VABS-S4-2S-G18-R3**
			G1/4	26 mm	**541063**	**VABS-S4-1S-G14-R3**
Individual sub-base, port pattern to ISO 15407-2, electrical connection via cable terminals						
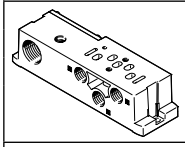	–	Threaded connection, internal pilot air supply, lateral connections	G1/8	18 mm	**541067**	**VABS-S4-2S-G18-B-K2**
			G1/4	26 mm	**541065**	**VABS-S4-1S-G14-B-K2**
	–	Threaded connection, external pilot air supply, lateral connections	G1/8	18 mm	**539723**	**VABS-S4-2S-G18-K2**
			G1/4	26 mm	**539725**	**VABS-S4-1S-G14-K2**
Plug socket for the electrical connection of individual valves, type C						
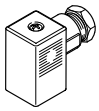	–	• Angled socket, type C, 3-pin • Straight plug, PG7 • 230 V AC			**151687**	**MSSD-EB**
		• Angled socket, type C, 3-pin • Straight plug, M12x1			**539712**	**MSSD-EB-M12**
Illuminating seal for connection pattern to EN 175301-803, type C					**Datasheet → Internet: meb-ld**	
	–	For plug socket MSSD, 12 ... 24 V DC			**151717**	**MEB-LD-12-24DC**

Accessories – Solenoid valve with switching position sensing

Ordering data

	Code	Description		Part no.	Type
Connecting cable for electrical connection of individual valves, type C					
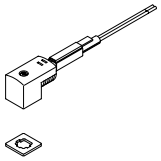	GG	• Angled socket, type C, 3-pin, with LED • Open end, 3-core • 24 V DC, PVC	2.5 m	**151688**	**KMEB-1-24-2.5-LED**
	GH		5 m	**151689**	**KMEB-1-24-5-LED**
	GJ		10 m	**193457**	**KMEB-1-24-10-LED**
Connecting cable for the electrical connection of sensors for switching position sensing					
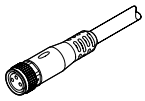	GM	• Straight socket, 1xM8, 3-pin • Open end, 3-core	2.5 m	**541333**	**NEBU-M8G3-K-2.5-LE3**
	GN	• Straight socket, 1xM8, 3-pin • Open end, 3-core	5 m	**541334**	**NEBU-M8G3-K-5-LE3**
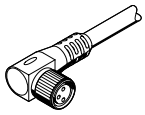	GO	• Angled socket, 1xM8, 3-pin • Open end, 3-core	2.5 m	**541338**	**NEBU-M8W3-K-2.5-LE3**
	GP	• Angled socket, 1xM8, 3-pin • Open end, 3-core	5 m	**541341**	**NEBU-M8W3-K-5-LE3**
	–	• Angled socket, rotatable, 1xM8, 3-pin • Open end, 3-core	2.5 m	**8001660**	**NEBU-M8R3-K-2.5-LE3**
	–	• Angled socket, rotatable, 1xM8, 3-pin • Open end, 3-core	5 m	**8001661**	**NEBU-M8R3-K-5-LE3**
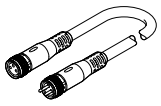	GQ	• Straight socket, 1xM8, 3-pin • Straight plug 1xM8, 4-pin	2.5 m	**554037**	**NEBU-M8G3-K-2.5-M8G4**
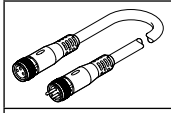	–	Modular system for a choice of connecting cables	–	**–**	**NEBU-...** **→ Internet: nebu**
Pneumatic connection accessories					
A selection of possible fittings, blanking plugs, silencers and other pneumatic accessories can be found in the chapter **Accessories →** page: 260 or on the website via the individual search terms: **Internet →** connection technology, silencer, blanking plug					

Datasheet – Control block with safety function for VTSA/VTSA-F

Flow rate
on valve terminal: 830 l/min

Solenoid valve width
26 mm

Voltage
24 V DC

Operating pressure
3 ... 10 bar
0.3 ... 1 MPa

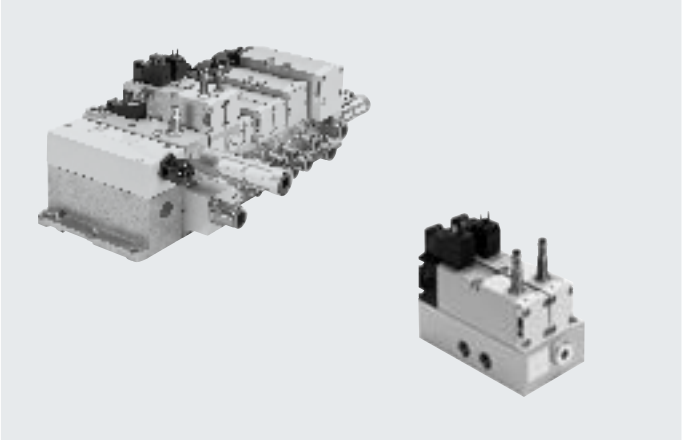

Description

The control block is designed for two-channel control of pneumatic drive components such as double-acting linear cylinders and can be used to realise the following protective measures:

- Protection against unexpected start-up (EN 1037)
- Reversing hazardous movements, provided the reversing motion will not result in further hazards

The control attributes of the control block enable Performance Level e to be achieved for the protective measures. The control block has been developed and manufactured in accordance with the basic and proven safety principles of EN ISO 13849-1 and EN ISO 13849-2.

The requirements of EN ISO 13849-1 and EN ISO 13849-2 (e.g. CCF, DC) must be taken into consideration when installing and operating the component and when using it in higher categories (2 to 4).
When using this product in machines or systems subject to specific C standards, the requirements specified in these standards must be observed.

The control block with safety function is designed for installation in machines and automation systems and must only be used in industrial applications (high-demand mode)!
The control block with safety function is suitable for use as a press safety valve to EN 962.

More information and technical data
➔ Internet: User documentation

Version for valve terminal VTSA/VTSA-F

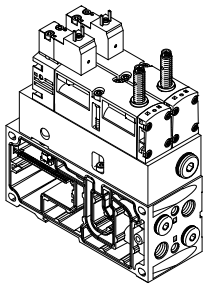

The valves with integrated switching position sensing on manifold sub-base for valve terminal VTSA/VTSA-F need to be supplied with power regardless of the type of electrical actuation (individual, multi-pin plug or fieldbus/control block connection).

The electrical connection for the solenoid valves is established separately via a standardised square plug to
EN 175301-803, type C.
The switching position sensing of the inductive PNP or NPN proximity switch is via a push-in connector size M8x1 to EN 61076-2-104.

Note

The appropriate manifold sub-base VABV-S4- ..., which is required for integration into the valve terminal, is not part of the control block. It is automatically allocated by the configurator when the control block is selected.

Note

The control block with safety function (VOFA) is also available as a decentralised individual connection variant with electrical and pneumatic individual connection.
For information see:
➔ Internet: vofa

Datasheet – Control block with safety function for VTSA/VTSA-F

Pneumatic/electrical links

Function

The safety function is achieved by linking two pneumatic ducts of two 5/2-way single solenoid valves within the control block: port (4) is only pressurised if both solenoid valves are switched to the switching position (14).
Port (2) is always supplied with compressed air if at least one of the two solenoid valves is in normal position.

The valves are reset via a mechanical spring.
The switching operation of the solenoid valves can be sensed using the proximity switches on the solenoid valves (switching position sensing).

By connecting the control signal and the switching signal of the proximity switch it is possible to check if the piston spools of the solenoid valves have reached or left the normal position (expectations).

The piston spools of the solenoid valves are designed to prevent pneumatic short circuits between the ports (2) and (4) are prevented (positive overlap).

The two solenoid valves must be actuated via two separate ducts to achieve the required category 4 (Performance Level e, to EN ISO 13849-1).

Circuit symbol[1)]

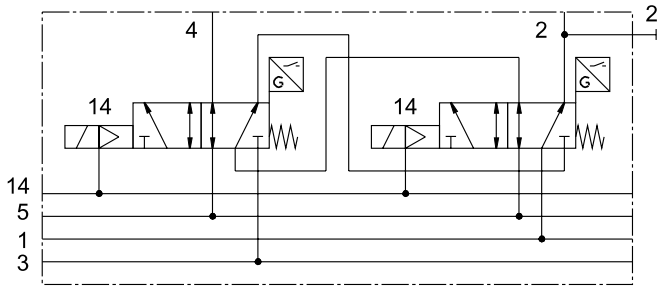

For the control block with safety function VOFA-B26-T52-... for the valve terminal, two 5/2-way solenoid valves of width 26 mm are pneumatically linked via two ducts, using an intermediate plate as vertical stacking element (output 2 is switched in parallel, output 4 is switched in series).

1) The circuit symbol represents a valve with a proximity switch with a N/O switching output signal. In accordance with ISO 1219-1, this symbol applies to both N/O and N/C contacts. The switching element function of the sensors used here is designed as an N/C contact.

Safety characteristics	
Conforms to	EN 13849-1
Safety function	Protection against manipulation, prevention of unexpected start-up
	Reversing a movement
Performance level (PL)	Protection against manipulation, prevention of unexpected start-up/up to category 4, Performance Level e
	Reversing a movement/up to category 4, Performance Level e
Note on forced checking procedure	Switching frequency min. 1/week
Certificate-issuing authority	IFA 1001179
CE marking (see declaration of conformity)	To EU EMC Directive[1)]
	To EU Machinery Directive
Max. positive test pulse with logic 0 [ìs]	1000
Max. negative test pulse with logic 1 [ìs]	800
Shock resistance	Shock test with severity level 2, to EN 60068-2-27
Vibration resistance	Transport application test with severity level 2, to EN 60068-2-6

1) For information about the area of use, see the EC declaration of conformity at: www.festo.com/catalogue/... ➔ Support/Downloads.
If the devices are subject to usage restrictions in residential, commercial or light-industrial environments, further measures for the reduction of the emitted interference may be necessary.

Datasheet – Control block with safety function for VTSA/VTSA-F

Peripherals overview

Connection option for control block with safety function via PROFIsafe shut-off module CPX-FVDA-P2 (safety module)

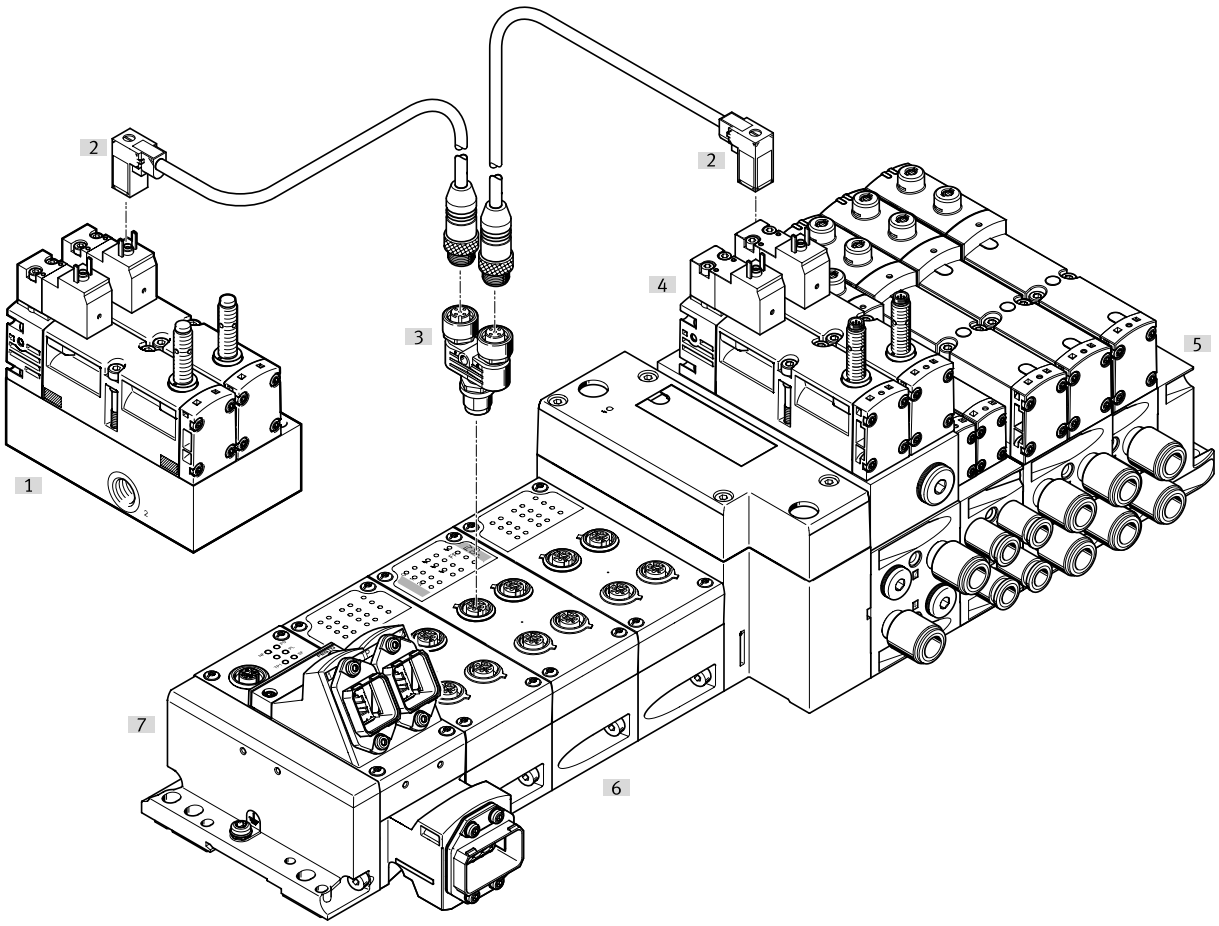

Peripherals overview

		Description	→ Page/Internet
[1]	Control block with safety function	Away from the valve terminal as a decentralised individual connection variant	vofa
[2]	Connecting cable KMEB-...	For electrical connection of the control block with safety function via PROFIsafe shut-off module CPX-FV-DA-P2 (safety module)	kmeb
[3]	Push-in T-connector NEDU-...	For simultaneously actuating two valves, e.g. control block with safety function	nedu
[4]	Control block with safety function	Integrated in the pneumatic section of the valve terminal VTSA/VTSA-F	–
[5]	Pneumatic section of the valve terminal VTSA/VTSA-F	Pneumatic components of the valve terminal VTSA/VTSA-F	–
[6]	CPX-FVDA-P2 (safety module)	PROFIsafe shut-off module integrated in the CPX terminal of the valve terminal VTSA/VTSA-F	cpx
[7]	CPX terminal of the valve terminal VTSA/VTSA-F	Electric components of the valve terminal VTSA/VTSA-F	–

Datasheet – Control block with safety function for VTSA/VTSA-F

General technical data		
Design		Piston spool valve
Standard nominal flow rate	[l/min]	830
Reset method		Mechanical spring
Sealing principle		Soft
Exhaust function		Can be throttled
Actuation type		Electrical
Overlap		Positive overlap
Type of actuation		Piloted
Flow direction		Not reversible
Exhaust function		Can be throttled
Suitable for vacuum		–
Nominal width	[mm]	9
Pilot air supply		Via valve terminal
Type of mounting		Via through-hole, on manifold sub-base
Mounting position		Any
Manual override		–
Signal status display, valve		With accessories
Pneumatic connections		
Supply	1	Via the manifold sub-base of the valve terminal
Exhausting	3/5	
Working ports	2/4	
Pilot air supply	14	
Pressure gauge		G1/4

Operating and environmental conditions		
Operating medium		Compressed air to ISO 8573-1:2010 [7:4:4]
Pilot medium		Compressed air to ISO 8573-1:2010 [7:4:4]
Notes on operating/ Pilot medium		Lubricated operation possible (in which case lubricated operation will always be required)
Operating pressure	[bar]	0 ... 10
	[MPa]	0 ... 1
Operating pressure for valve terminal with internal pilot air supply	[bar]	3 ... 10
	[MPa]	0.3 ... 1
Pilot pressure	[bar]	3 ... 10
	[MPa]	0.3 ... 1
Noise level LpA	[dB(A)]	85
Ambient temperature	[°C]	−5 ... +50
Temperature of medium	[°C]	−5 ... +50
CE marking (see declaration of conformity)		To EU EMC Directive[1)]
		To EU Machinery Directive

1) For information about the area of use, see the EC declaration of conformity at: www.festo.com/catalogue/... → Support/Downloads.
If the devices are subject to usage restrictions in residential, commercial or light-industrial environments, further measures for the reduction of the emitted interference may be necessary.

Datasheet – Control block with safety function for VTSA/VTSA-F

Electrical data for control block			
Electrical connection			Plug to EN 175301-803, type C, without PE conductor
Nominal operating voltage		[V DC]	24
Permissible voltage fluctuations		[%]	–15/+10
Surge resistance		[kV]	2.5
Pollution degree			3
Power consumption		[W]	1.8
Max. magnetic disruption field		[mT]	60
Switching position sensing			Normal position via sensor
Duty cycle		[%]	100
Degree of protection to EN 60529			IP65, NEMA 4 (for all types of signal transmission when mounted)
Protection against direct and indirect contact			PELV Protection class to EN 60950/IEC 950
Valve switching time	On	[ms]	22
	Off	[ms]	59
Valve sensor switching time [1]	On	[ms]	60
	Off	[ms]	11

1) Valve sensor switching time off: period of time from the coil being energised to the sensor being switched off when using a PNP sensor.
Valve sensor switching time on: period of time from the coil being de-energised to 0-L edge at the sensor when using a PNP sensor.

Note

With a duty cycle of 100%, the control block must be de-energised once a week.

Electrical data – Sensor (to EN -60947-5-2)		
Electrical connection		Cable, 3-core
		1xM8 plug, 3-pin
Cable length	[m]	2.5
Switching output		PNP or NPN
Switching element function		N/C
Signal status display		Yellow LED
Operating voltage range	[V DC]	10 ... 30
Residual ripple	[%]	±10
Sensor no-load supply current	[mA]	max. 10
Max. output current	[mA]	200
Voltage drop	[V]	max. 2
Max. switching frequency	[Hz]	5000
Short circuit current rating		Clocked
Reverse polarity protection for sensor		For all electrical connections
Measuring principle		Inductive

Materials	
Sub-base/manifold sub-base	Wrought aluminium alloy
Valve	Die-cast aluminium, PA
Seals	FPM, NBR, HNBR
Screws	Galvanised steel
Sensor housing	High-alloy stainless steel
Sensor cable sheath	PUR
Note on materials	RoHS-compliant

Datasheet – Control block with safety function for VTSA/VTSA-F

Dimensions Download CAD data ➔ www.festo.com

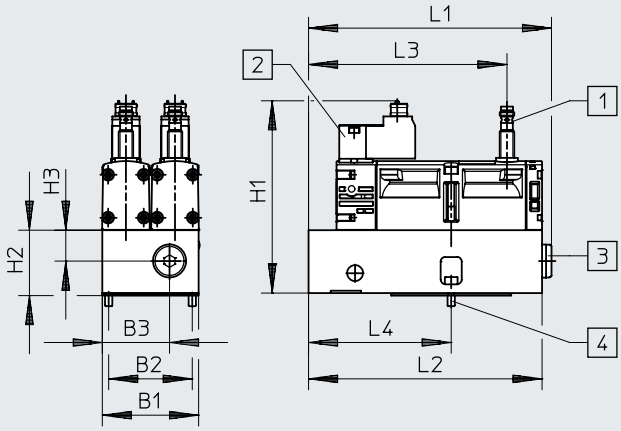

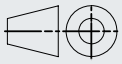

[1] Proximity switch PNP or NPN, size M8x1, plug connection to EN 61076-2-104

[2] Electrical connection to EN 175301-803, type C

[3] Pneumatic connection G1/4 sealed with blanking plug

[4] 2x screw with internal hexagon (width across flats 2.5), M4x12 (included in the scope of delivery)

Type	B1	B2	B3	H1	H2	H3	L1	L2	L3	L4
VOFA-B26-T52-M-1C1-APP	53	46	37	105.8	34.6	17	133.7	128.5	109.2	78.5
VOFA-B26-T52-M-1C1-ANP										

Ordering data

	Valve function	Code	Switching output	Width [mm]	Weight [g]	Part no.	Type
Control block, version for valve terminal VTSA/VTSA-F							
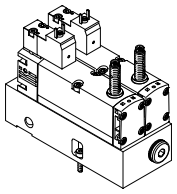	2x 5/2-way valve, single solenoid, mechanical spring return, with switching position sensing via inductive sensor and 3-pin sensor push-in connector M8, mounted on intermediate plate for pneumatic links	SP [2]	PNP	53	1112	– [1]	**VOFA-B26-T52-M-1C1-APP**
		SN [2]	NPN	53	1112	– [1]	**VOFA-B26-T52-M-1C1-ANP**

1) The control block with safety function can only be ordered via the valve terminal configurator and therefore does not have a separate part number. The appropriate manifold sub-base required for the valve terminal VTSA/VTSA-F is automatically allocated to the control block by the configurator

2) Code letter within the order code for a valve terminal configuration

Note

The sensors integrated in the valves must not be replaced by the customer. Incorrect assembly can result in malfunctions or damage to the valve.
Please contact Festo in the event of a malfunction.

Accessories – Control block with safety function for VTSA/VTSA-F

Ordering data

	Code	Description		Part no.	Type
Plug socket for the electrical connection of individual valves, type C					
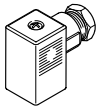	–	• Angled socket, type C, 3-pin • Straight plug, PG7 • 230 V AC		**151687**	**MSSD-EB**
	–	• Angled socket, type C, 3-pin • Straight plug, M12x1		**539712**	**MSSD-EB-M12**
Illuminating seal for connection pattern to EN 175301-803, type C				**Datasheet → Internet: meb-ld**	
	–	For plug socket MSSD, 12 ... 24 V DC		**151717**	**MEB-LD-12-24DC**
Connecting cable for electrical connection of individual valves, type C					
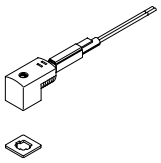	GG	• Angled socket, type C, 3-pin, with LED • Open end, 3-core • 24 V DC, PVC	2.5 m	**151688**	**KMEB-1-24-2.5-LED**
	GH		5 m	**151689**	**KMEB-1-24-5-LED**
	GJ		10 m	**193457**	**KMEB-1-24-10-LED**
Connecting cable for the electrical connection of sensors for switching position sensing					
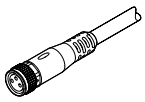	GM	• Straight socket, 1xM8, 3-pin • Open end, 3-core	2.5 m	**541333**	**NEBU-M8G3-K-2.5-LE3**
	GN	• Straight socket, 1xM8, 3-pin • Open end, 3-core	5 m	**541334**	**NEBU-M8G3-K-5-LE3**
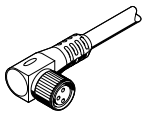	–	• Angled socket, rotatable, 1xM8, 3-pin • Open end, 3-core	2.5 m	**8001660**	**NEBU-M8R3-K-2.5-LE3**
	–	• Angled socket, rotatable, 1xM8, 3-pin • Open end, 3-core	5 m	**8001661**	**NEBU-M8R3-K-5-LE3**
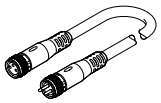	GQ	• Straight socket, 1xM8, 3-pin • Straight plug 1xM8, 4-pin	2.5 m	**554037**	**NEBU-M8G3-K-2.5-M8G4**
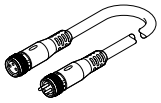	–	Modular system for a choice of connecting cables	–	**–**	**NEBU-...** **→ Internet: nebu**
Connecting cable for the electrical connection of PROFIsafe shut-off module CPX-FVDA-P2 to the control block					
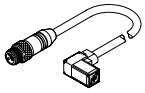	–	For the easy connection of one control block valve (power supply via PROFIsafe shut-off module CPX-FVDA-P2) • Angled socket, type C, 3-pin, with LED • Straight plug 1xM12, 5-pin • 24 V DC, PUR	0.5 m	**177677**	**KMEB-2-24-M12-0.5-LED**
Push-in T-connector for dual electrical connection of PROFIsafe shut-off module CPX-FVDA-P2 to the control block					
	–	For dual connection of two control block valves (power supply via PROFIsafe shut-off module CPX-FVDA-P2) • Straight plug, 1xM12, 5-pin (A-coded) • 2x straight socket, 1xM12, 5-pin (A-coded) • Operating voltage range 0 ... 30 V DC		**2839867**	**NEDU-L2R1-V10-M12G5-M12G5**
Pneumatic connection accessories					
A selection of possible fittings, blanking plugs, silencers and other pneumatic accessories can be found in the chapter **Accessories →** page: 260 or on the website via the individual search terms: **Internet →** connection technology, silencer, blanking plug					

Datasheet – Pilot air switching valve for VTSA/VTSA-F

Function[1)]

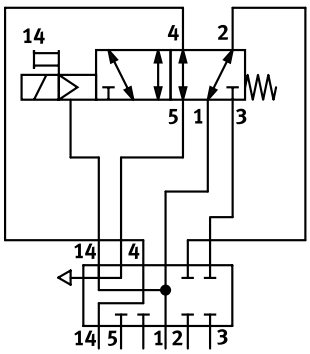

- Flow rate
  150 l/min (18 mm)
  450 l/min (26 mm)
- Valve width
  18 mm
  26 mm
- Voltage
  24 V DC
- Operating pressure
  –0.9 ... 10 bar
  –0.09 ... 1 MPa

Description

The pilot air switching valve is essentially a combination of a 5/2-way solenoid valve with switching position sensing and the intermediate plate VABF-S4-...-S. It enables the pilot air supply to be verifiably switched on and off (sensing function) from duct 1 to 14 for the entire pressure zone or valve terminal.
This valve is not a safety device in accordance with the Machinery Directive 2006/42/EC. When used in higher categories, the sensor signal from the valve must be evaluated by the control system.

This valve is suitable for use in safety-related parts of control systems to EN ISO 13849-1. This valve is designed for installation in machines and automation systems and must only be used in industrial applications (high-demand mode).
More information and technical data
➔ Internet: User documentation

Alternative switching position sensing with pressure switch

As an alternative to the sensing function in the solenoid valve, a pressure switch can be mounted (in place of the blanking plug) on the intermediate plate VABF-S4-...-S. With this pressure switch, the switching on and off (sensing function) of the pilot air supply can be verified.

An ISO solenoid valve without a sensor can therefore be mounted on the intermediate plate to give the same function.
➔ Internet: spba

Note

The pilot air switching valve can only be operated on the valve terminal VTSA/VTSA-F in combination with a right end plate for external pilot air type VABE-S6-1RZ-.... Port 14 on the right end plate must then be sealed.

Vertical stacking variant for valve terminal VTSA/VTSA-F, width 18 mm, 26 mm

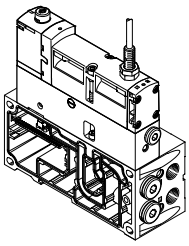

The valves with integrated switching position sensing in plug-in design for valve terminal VTSA/VTSA-F can be used regardless of the type of electrical actuation (individual, multi-pin plug or fieldbus/control block connection).

This module is supplied pre-assembled together with the valve terminal VTSA/VTSA-F. No other assembly steps are required before installation.

Switching position sensing is carried out using an inductive PNP proximity switch with cable and 1xM12 push-in connector to EN 61076-2-104.
Alternatively, combinations with a pressure switch in the intermediate plate and ISO solenoid valves are possible.

Note

All solenoid valves VSVA to ISO 15407-1 can be used.
➔ Internet: vsva

1) The circuit symbol represents a valve with a proximity switch with a N/O switching output signal. In accordance with ISO 1219-1, this symbol applies to both N/O and N/C contacts.
The switching element function of the sensors used here is designed as an N/C contact.

Datasheet – Pilot air switching valve for VTSA/VTSA-F

Function of pneumatic/electrical links

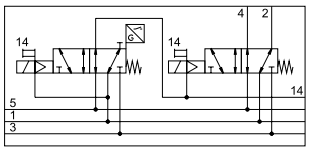

The function for switching off the pilot air is essentially achieved by combining the intermediate plate type VABF-S4-...-S with the 5/2-way single solenoid valve type VSVA-B-M52-MZD-...-1T1L-APX-0.5.
The valve terminal is not supplied with any pilot air via the right end plate type VABE-S6-1 (ident. code XS, external pilot air). Port 14 on the end plate is sealed.

The pilot air for the valve is branched from duct (1) in the intermediate plate and redirected to the pilot air duct (14) of the valve terminal when the valve is in the switching position. Ports (2) and (4) of the manifold sub-base are sealed with blanking plugs. The switching operation of the solenoid valve can be sensed using the proximity switch on the solenoid valve (or pressure switch in the intermediate plate VABF...).

By connecting the control signal and the switching signal of the proximity switch it is possible to check if the piston spools of the solenoid valves have reached or left the normal position (expectations).

The piston spool of the solenoid valve is designed so that pneumatic short circuits between the ports (2) and (4) are prevented (overlap).

Alternatively, combinations with a pressure switch in the intermediate plate and ISO solenoid valves are possible.

Note

A valve from the VTSA/VTSA-F modular system can be provided or configured to the right of the valve with switching position sensing on the intermediate plate of the pilot air switching valve.

Pilot air switching valve with integrated switching position sensing

The pilot air switching valve can be ordered as a combination of a 5/2-way solenoid valve with switching position sensing and the intermediate plate VABF-S4-...-S.

Alternative switching position sensing with pressure switch

As an alternative to the pilot air switching valve with integrated switching position sensing, it is possible to combine an ISO solenoid valve and a pressure switch in the intermediate plate.

To do this, various 5/2-way solenoid valves in combination with a pressure switch SPBA-... are available.

Safety characteristics	
Conforms to	EN 13849-1/2
CE marking (see declaration of conformity)	To EU EMC Directive [1]
Shock resistance	Shock test with severity level 2, to EN 60068-2-27
Vibration resistance	Transport application test with severity level 2, to EN 60068-2-6

1) For information about the area of use, see the EC declaration of conformity at: www.festo.com/catalogue/... → Support/Downloads.
If the devices are subject to usage restrictions in residential, commercial or light-industrial environments, further measures for the reduction of the emitted interference may be necessary.

Safety characteristics Valve function 5/2-way, single solenoid	Test pulses Max. positive test pulse with logic 0 [µs]	Max. negative test pulse with logic 1 [µs]
VSVA-B-M52-MZ...-A1-1T1L- ...	1200	1100
VSVA-B-M52-MZ...-A2-1T1L- ...	1500	800
VSVA-B-M52-MZ-A1-1C1- ...	1800	800

Datasheet – Pilot air switching valve for VTSA/VTSA-F

General technical data		
	Intermediate plate type VABF-S4-2-S and solenoid valve type VSVA-B-M52-MZD-A2-1T1L-APX-0.5 mounted on valve terminal VTSA/VTSA-F	Intermediate plate type VABF-S4-1-S and solenoid valve type VSVA-B-M52-MZD-A1-1T1L-APX-0.5 mounted on valve terminal VTSA/VTSA-F
Width	**18 mm**	**26 mm**
Design	Piston spool valve	
Sealing principle	Soft	
Overlap	Positive overlap	
Actuation type	Electrical	
Type of actuation	Piloted	
Type of mounting: Solenoid valve on intermediate plate Intermediate plate on manifold sub-base	 M3 M3x12 (captive)	 M4 M4x12 (captive)
Mounting position	Any	

Pneumatic connections		
Supply	1	Via the manifold sub-base of the valve terminal
Exhausting	3/5	Via the manifold sub-base of the valve terminal
Working ports	2/4	Sealed with blanking plug type B-1/4
Pilot air supply	14	Via the manifold sub-base of the valve terminal
Pressure gauge/pressure switch		G1/8

Switching times [ms]				
Width		18 mm	26 mm	
Valve type		**5/2**	**5/2**	
Identifier		**MZD-A2**	**MZD-A1**	**MZ-A1**
Valve switching time	On	12	20	21
	Off	38	54	41
Valve sensor switching time[1)]	On	32	60	60
	Off	9	11	11

1) Valve sensor switching time off: period of time from the coil being energised to the sensor being switched off when using a PNP sensor.
Valve sensor switching time on: period of time from the coil being de-energised to 0-L edge at the sensor when using a PNP sensor.

Protective circuit

Each solenoid coil VSVA is protected with a spark arresting protective circuit as well as against polarity reversal.

24 V DC version

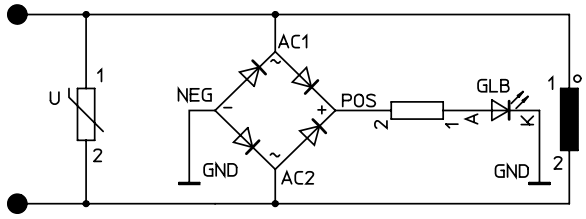

Datasheet – Pilot air switching valve for VTSA/VTSA-F

Peripherals overview

Pilot air switching valve with switching position sensing

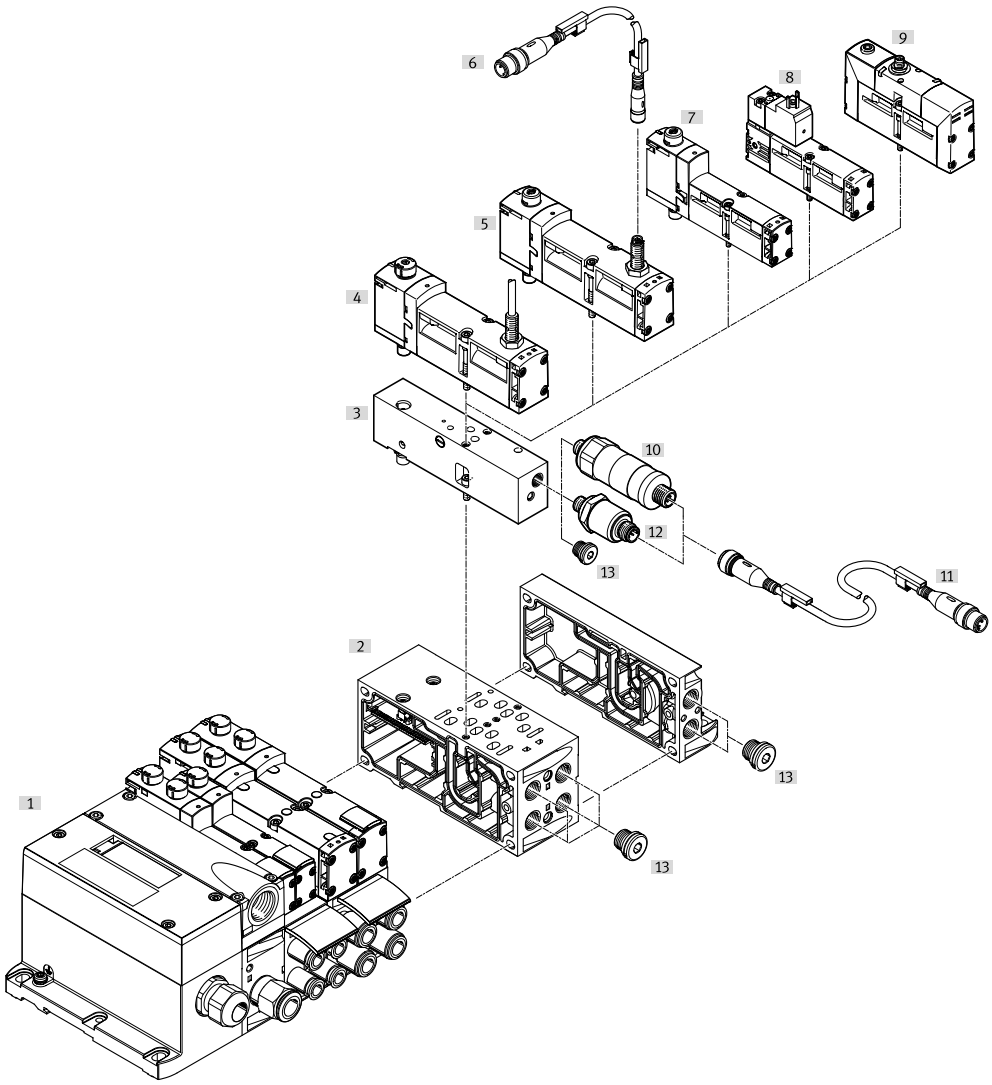

Peripherals overview – Pilot air switching valve

		Description	→ Page/Internet
[1]	Valve terminal VTSA/VTSA-F	Valve terminal with multi-pin plug interface	vtsa
[2]	Manifold sub-base VABF-...	Width 18 mm or 26 mm	140
[3]	Intermediate plate VABF-S4-...	For pilot air switching valve	179
[4]	Solenoid valve VSVA-B-M52-...	Width 18 mm or 26 mm, with sensor and integrated cable 0.5 m	179
[5]	Solenoid valve VSVA-B-M52-...	Width 18 mm or 26 mm, with sensor for external connecting cable	179
[6]	Connecting cable NEBU-M8 ...	For connection to sensor	180
[7]	Solenoid valve VSVA-B-M52-...	Width 18 mm or 26 mm [1)]	179
[8]	Solenoid valve VSVA-B-M52-...	Width 18 mm or 26 mm, with plug to EN 175301, type C [1)]	179
[9]	Solenoid valve VSVA-B-M52-...	Width 18 mm or 26 mm, with round plug [1)]	vsva
[10]	Pressure switch SPBA-...	Mechanically actuated	180
[11]	Connecting cable NEBU-M12G5-...	For connection to pressure switch	180
[12]	Pressure switch SPBA-...	Electrically actuated	180
[13]	Blanking plug	–	261

1) The switching position is sensed by pressure switches when the solenoid valves used have no integrated sensor.
The pressure switch is screwed into the intermediate plate in place of the blanking plug.

Datasheet – Pilot air switching valve for VTSA/VTSA-F

Electrical data for pilot air switching valve		
Nominal operating voltage	[V DC]	24
Permissible voltage fluctuations	[%]	±10
Surge resistance	[kV]	2.5
Pollution degree		3
Power consumption	[W]	1.6 (M52-MZD), 1.8 (M52-MZ)
Max. magnetic disruption field	[mT]	60
Switching position sensing		Normal position via sensor
Duty cycle	[%]	100
Degree of protection		IP65, NEMA 4 (for all types of signal transmission when mounted)

Electrical data for sensor						
Sensor identifier		**APP**	**ANP**	**APC**	**ANC**	**APX**
Switching output		PNP	NPN	PNP	NPN	PNP
Sensor connection		Plug, 1xM8, 3-pin		With fixed cable and open end		With fixed cable and plug M12x1, 4-pin
Cable length	[m]	0.5 (with 1xM8 socket, 1xM12 plug)		2.5		0.5
Switching element function		N/C				
Signal status display		Yellow LED (on sensor)				
Operating voltage range	[V DC]	10 ... 30				
Residual ripple	[%]	±10				
Rated operating voltage	[V DC]	24				
Max. no-load supply current	[mA]	10				
Max. output current	[mA]	200				
Max. voltage drop	[V]	2				
Max. switching frequency	[Hz]	5000				
Short circuit current rating		Clocked				
Reverse polarity protection		For all electrical connections				
Measuring principle		Inductive				
Switching position sensing		Valve normal position via sensor				

Datasheet – Pilot air switching valve for VTSA/VTSA-F

Operating and environmental conditions				
Valve		VSVA-B-M52-...-1T1L-...	VSVA-B-M52-...-1C1-...	Without sensor
Operating medium		Compressed air to ISO 8573-1:2010 [7:4:4]		
Notes on operating/ Pilot medium		Lubricated operation possible (in which case lubricated operation will always be required)		
Operating pressure	[bar]	–0.9 ... 10	–0.9 ... 16	–0.9 ... 10
	[MPa]	–0.09 ... 1	–0.09 ... 1	–0.09 ... 1
Noise level LpA	[dB(A)]	85	85	–
Ambient temperature	[°C]	–5 ... +50	–5 ... +50	–5 ... +50
Temperature of medium	[°C]	–5 ... +50	–5 ... +50	–
Note on materials		RoHS-compliant	RoHS-compliant	RoHS-compliant
KC marking		KC EMC	KC EMC	–
UKCA marking		To UK instructions for EMC	To UK instructions for EMC	–
Certification		C-Tick	C-Tick	–
		c UL us Recognized (OL)	–	c UL us Recognized (OL)

Materials	
Sub-base/manifold sub-base	Die-cast aluminium
Valve	Die-cast aluminium, PA
Seals	FPM, NBR
Screws	Galvanised steel
Sensor housing	High-alloy stainless steel
Sensor cable sheath	TPE-U(PUR)

Product weight [g]		
Width	18 mm	26 mm
5/2-way solenoid valve type...		
VSVA-B-M52-M...-A1-1T1L-APC	–	307
VSVA-B-M52-M...-A1-1T1L-APP	–	264
VSVA-B-M52-M...-A1-1C1-APC	–	332
VSVA-B-M52-M...-A1-1C1-APP	–	289
VSVA-B-M52-M...-A1-1T1L-ANC	–	307
VSVA-B-M52-M...-A1-1T1L-ANP	–	264
VSVA-B-M52-M...-A1-1C1-ANC	–	332
VSVA-B-M52-M...-A1-1C1-ANP	–	289
VSVA-B-M52-M...-A1-1T1L-APX-0.5	–	281
VSVA-B-M52-M...-A2-1T1L-APX-0.5	157	–
VSVA-B-M52-M...-A2-1T1L-APP	140	–
VSVA-B-M52-M...-A2-1T1L-ANP	140	–
VSVA-B-M52-M...-A1-1T1L	–	293
VSVA-B-M52-M...-A2-1T1L	163	–
Intermediate plate		
VABF-S4-2-S	203.5	–
VABF-S4-1-S	–	295

Ordering data – Pilot air switching valve for VTSA/VTSA-F

Ordering data	Code	Valve function			Part no.	Type
5/2-way solenoid valve, 24 V DC, plug-in design with proximity switch						
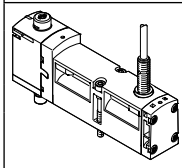	SS	5/2-way valve, single solenoid, mechanical spring return, with 0.5 m connecting cable and 4-pin sensor push-in connector M12x1	PNP	18 mm	**573201**	**VSVA-B-M52-MZD-A2-1T1L-APX-0.5**
				26 mm	**570850**	**VSVA-B-M52-MZD-A1-1T1L-APX-0.5**
	–	5/2-way valve, single solenoid, mechanical spring return, with 2.5 m connecting cable	PNP	26 mm	**560723**	**VSVA-B-M52-MZD-A1-1T1L-APC**
			NPN	26 mm	**560742**	**VSVA-B-M52-MZD-A1-1T1L-ANC**
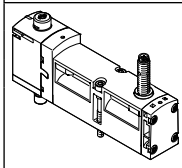	SO	5/2-way valve, single solenoid, mechanical spring return, with 3-pin sensor push-in connector M8x1	PNP	18 mm	**573202**	**VSVA-B-M52-MZD-A2-1T1L-APP**
				26 mm	**560724**	**VSVA-B-M52-MZD-A1-1T1L-APP**
	SQ		NPN	18 mm	**573203**	**VSVA-B-M52-MZD-A2-1T1L-ANP**
				26 mm	**560743**	**VSVA-B-M52-MZD-A1-1T1L-ANP**
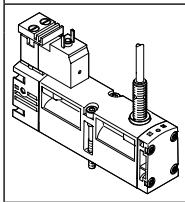	–	5/2-way valve, single solenoid, mechanical spring return, with plug to EN 175301, type C, with 2.5 m connecting cable	PNP	26 mm	**560725**	**VSVA-B-M52-MZ-A1-1C1-APC**
			NPN	26 mm	**560745**	**VSVA-B-M52-MZ-A1-1C1-ANP**
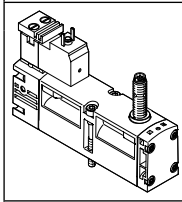	–	5/2-way valve, single solenoid, mechanical spring return, with plug to EN 175301, type C, with 3-pin sensor push-in connector M8x1	PNP	26 mm	**560726**	**VSVA-B-M52-MZ-A1-1C1-APP**
			NPN	26 mm	**560744**	**VSVA-B-M52-MZ-A1-1C1-ANC**
5/2-way solenoid valve, 24 V DC, plug-in design						
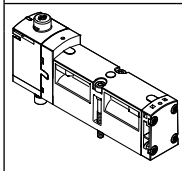	–	5/2-way valve, single solenoid, mechanical spring return		26 mm	**539159**	**VSVA-B-M52-MZD-A1-1T1L**
				18 mm	**539185**	**VSVA-B-M52-MZD-A2-1T1L**
Intermediate plate for pilot air switching valve						
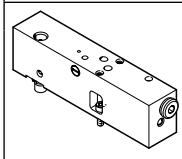	ZO	Intermediate plate, for switching the pilot air from duct 1 to 14		18 mm	**573200**	**VABF-S4-2-S**
				26 mm	**570851**	**VABF-S4-1-S**

Note

Further solenoid valves with switching position sensing can be ordered as distinct types. These are preconfigured with the required MO cover caps.

➔ Solenoid valve with switching position sensing, page 161

Note

The sensors integrated in the valves must not be replaced by the customer. Incorrect assembly can result in malfunctions or damage to the valve. Please contact Festo in the event of a malfunction.

Ordering data – Pilot air switching valve for VTSA/VTSA-F

Ordering data	Code	Description		Part no.	Type
Pressure switch for intermediate plate for pilot air switching valve					
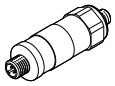	WL	Mechanical pressure switch for switchable pilot air supply (only in combination with intermediate plate ZO), with plug M12x1, 4-pin		**8000033**	**SPBA-P2R-G18-W-M12-0.25X**
	WH	Electrical pressure switch for switchable pilot air supply, switching output 2xPNP (only in combination with intermediate plate ZO), with 1xM12 plug, 4-pin		**8000210**	**SPBA-P2R-G18-2P-M12-0.25X**
Connecting cable for connection of pressure switches					
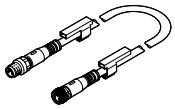	GE	• Straight socket, 1xM12, 5-pin • Straight plug 1xM12, 4-pin	0.5 m	**8000208**	**NEBU-M12G5-K-0.5-M12G4**
Connecting cable for the electrical connection of sensors for switching position sensing					
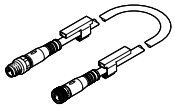	–	• Straight socket, 1xM8, 3-pin • Straight plug 1xM12, 3-pin	0.5 m	**8000209**	**NEBU-M8G3-K-0.5-M12G3**
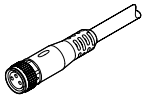	GM	• Straight socket, 1xM8, 3-pin • Open end, 3-core	2.5 m	**541333**	**NEBU-M8G3-K-2.5-LE3**
	GN	• Straight socket, 1xM8, 3-pin • Open end, 3-core	5 m	**541334**	**NEBU-M8G3-K-5-LE3**
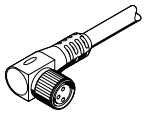	GO	• Angled socket, 1xM8, 3-pin • Open end, 3-core	2.5 m	**541338**	**NEBU-M8W3-K-2.5-LE3**
	GP	• Angled socket, 1xM8, 3-pin • Open end, 3-core	5 m	**541341**	**NEBU-M8W3-K-5-LE3**
	–	• Angled socket, rotatable, 1xM8, 3-pin • Open end, 3-core	2.5 m	**8001660**	**NEBU-M8R3-K-2.5-LE3**
	–	• Angled socket, rotatable, 1xM8, 3-pin • Open end, 3-core	5 m	**8001661**	**NEBU-M8R3-K-5-LE3**
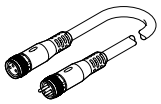	GQ	• Straight socket, 1xM8, 3-pin • Straight plug 1xM8, 4-pin	2.5 m	**554037**	**NEBU-M8G3-K-2.5-M8G4**
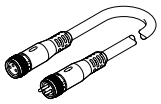	–	Modular system for a choice of connecting cables	–	**–**	**NEBU-...** **→ Internet: nebu**

Ordering data – Pilot air switching valve for VTSA/VTSA-F

Ordering data	Code	Description		Part no.	Type
Covering					
	N	Cover cap for manual override, non-detenting	10 pieces	**541010**	**VAMC-S6-CH**
	V	Cover cap for manual override, concealed	10 pieces	**541011**	**VAMC-S6-CS**
	A	Cover cap, heavy duty, for manual override, non-detenting heavy duty, detenting via accessory (key) (The cover cap is provided for one-off mounting only)	10 pieces	**4105147**	**VAMC-B-S6-CTR**
Accessories for manual override, heavy duty					
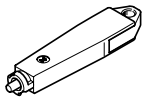	–	Coded key (accessory) for actuating the cover cap, heavy duty, for detenting position (VAMC-B-S6-CTR)	1 piece	**1662543**	**AHB-MEB-B**
Pneumatic connection accessories					
A selection of possible fittings, blanking plugs, silencers and other pneumatic accessories can be found in the chapter **Accessories →** page: 260 or on the website via the individual search terms: **Internet →** connection technology, silencer, blanking plug					

Note

There is a wide range of preconfigured solenoid valves with cover cap for manual override and correct valve type code available to order in the sections on solenoid valves.

Datasheet – Pilot air switching valve for VTSA-F-CB

- Flow rate 150 l/min

- Pilot air switching valve width
  18 mm

- Voltage
  24 V DC

- Operating pressure
  3 ... 10 bar
  0.3 ... 1 MPa

Description

Duct 14 of the valve terminal is supplied with pilot air via the pilot air switching valve. This can be used to realise the safety function "Protection against unexpected start-up".
The pilot air switching valve is always supplied with internal pilot air from the valve terminal.
The valve terminal can be operated with internal pilot air (from duct 1 of the valve terminal) or with external pilot air (external compressed air supply via duct 2).

The pilot air switching valve is actuated via an electromagnetic pilot control. It can be switched on and off manually using the manual override. The manual override can be shut off manually or using the electrical pilot control.

The pilot air switching valve enables the pilot air supply to be verifiably switched on and off (sensing function) from duct 1 to duct 14 for the entire pressure zone or valve terminal.

This valve is not a safety device in accordance with the Machinery Directive 2006/42/EC. When used in higher categories, the sensor signal from the valve must be evaluated by the control system.
This valve is suitable for use in safety-related parts of control systems to EN ISO 13849-1.

This valve is designed for installation in machines and automation systems and must only be used in industrial applications (high-demand mode).
More information and technical data

➔ Internet: User documentation

Note

The pilot air switching valve can only be operated on the valve terminal VTSA-F-CB in combination with a right end plate for external pilot air type VABE-S6-1RZ-... Port 14 on the right end plate must then be sealed.
This information applies only for a single pressure zone.
For several pressure zones, see:
➔ Internet: User documentation

Safety characteristics		
Max. positive test pulse with logic 0	[ìs]	2000
Max. negative test pulse with logic 1	[ìs]	1200
Shock resistance		Shock test with severity level 2, to EN 60068-2-27
Vibration resistance		Transport application test with severity level 2, to EN 60068-2-6

Datasheet – Pilot air switching valve for VTSA-F-CB

General technical data		
Design		Poppet valve
Valve function		3/2-way closed, single solenoid
Standard nominal flow rate	[l/min]	125
Standard nominal flow rate for exhaust	[l/min]	125
Reset method		Mechanical spring and pneumatic spring
Sealing principle		Soft
Actuation type		Electrical
Overlap		Negative overlap
Type of actuation		Piloted
Mounting position		Any
Flow direction		Not reversible
Manual override		None (no code, part nos.: 8066575, 8066574, 8066571, 8066570)
		Detenting, self-resetting via electrical control signal (with code YE, part nos.: 8066573, 8066572, 8066569, 8066568)
Pilot air supply		For pilot air switching valve: internal via valve terminal
		For the valve terminal: internal via valve terminal (duct 1) – (part nos.: 8066569, 8066568, 8066571, 8066570)
		For the valve terminal: external via compressed air supply (duct 2) – (part nos.: 8066573, 8066572, 8066575, 8066574)
Type of mounting		Via through-hole, on manifold sub-base
MTTF, subcomponent		443 years, pressure switch
Width, manifold sub-base	[mm]	38 (for additional valve 18 mm)
	[mm]	46 (for additional valve 26 mm)
Pneumatic connections, pilot air switching valve		
Supply	1	Via the manifold sub-base of the valve terminal
Exhausting	3/5	Via the manifold sub-base of the valve terminal
Compressed air supply port (external)	2	G1/8
Exhaust air/exhaust	4	G1/8
Pilot air supply	14	Via the manifold sub-base of the valve terminal
Pneumatic connections, additional valve position		
Supply	1	Via the manifold sub-base of the valve terminal
Exhausting	3/5	Via the manifold sub-base of the valve terminal
Working ports (for valve 18 mm)	2/4	G1/8
Working ports (for valve 26 mm)	2/4	G1/4
Pilot air supply	14	Via the manifold sub-base of the valve terminal

Operating and environmental conditions		
Operating medium		Compressed air to ISO 8573-1:2010 [7:4:4]
Pilot medium		Compressed air to ISO 8573-1:2010 [7:4:4]
Notes on operating/ Pilot medium		Lubricated operation not possible
Operating pressure[2)]	[bar]	3 ... 10
	[MPa]	0.3 ... 1
Pilot pressure	[bar]	3 ... 10
	[MPa]	0.3 ... 1
Ambient temperature[2)]	[°C]	–5 ... +50
Temperature of medium[2)]	[°C]	–5 ... +50
Corrosion resistance class CRC[1)]		0

1) Corrosion resistance class CRC 0 to Festo standard FN 940070
No corrosion stress. Applies to small, visually unimportant standards-based parts such as threaded pins, circlips and clamping sleeves which are usually only available on the market in a phosphated or burnished version (and possibly oiled) as well as to ball bearings (for components < CRC 3) and plain bearings.

2) With an ambient temperature and a temperature of the medium from -5°C to +5°C and +40°C to +50°C, the maximum permissible operating pressure is 8 bar.

Datasheet – Pilot air switching valve for VTSA-F-CB

Electrical data for pilot air switching valve		
Nominal operating voltage	[V DC]	24
Permissible voltage fluctuations	[%]	±10
Electrical connection		Plug-in
Power consumption	[W]	1.6
Switching element function		N/C
Switching position sensing		Via pressure switch, exhausted status
Signal status display		Yellow LED, valve control
		Green LED, pressure switch, exhausted status
Duty cycle	[%]	100
Degree of protection		IP65

Materials	
Housing	Reinforced PA
Seals	NBR, HNBR
Screws	Galvanised steel
Note on materials	RoHS-compliant

Connection and display components

Pilot air switching valve VSVA-BT-M32CS... with manifold sub-base

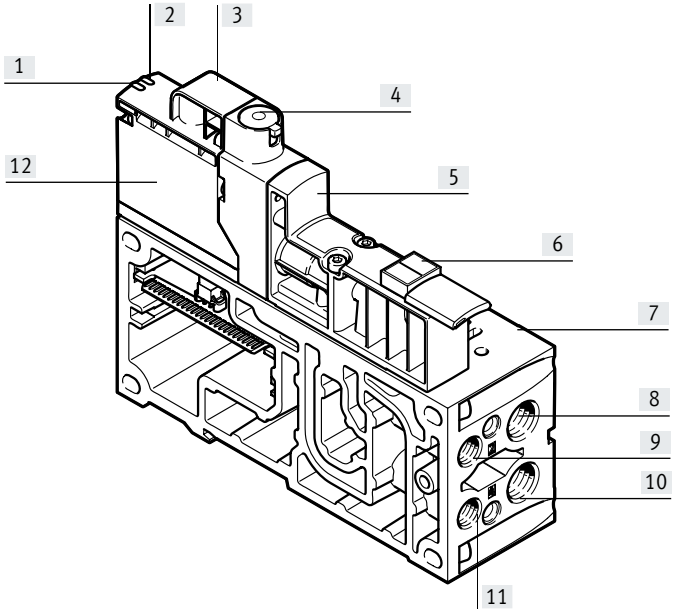

[1] Status LED for solenoid coil
[2] Status LED for pressure switch
[3] M12 connection (optional)
[4] Manual override (MO) (optional)
[5] Solenoid valve housing
[6] Inscription label holder with additional fields for marking (ASCF-T-S6-Z)
[7] Additional valve position
[8] Working port (2) of the additional valve position
[9] External compressed air supply port
[10] Working port (4) of the additional valve position
[11] Exhaust port
[12] Pilot control

Note

Detailed information on the manual override can be found in the user documentation.

➔ Internet: User documentation

Datasheet – Pilot air switching valve for VTSA-F-CB

Valve function

Terminal code	Circuit symbol	Description
CT	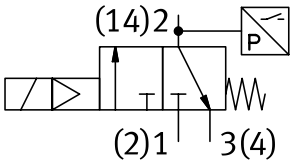	• Pilot air supply via duct 2 (external pilot air) of manifold sub-base • Without manual override (MO)
CT	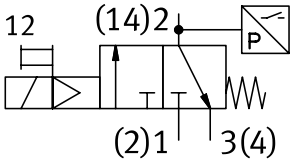	• Pilot air supply via duct 2 (external pilot air) of manifold sub-base • With manual override (MO)
CS	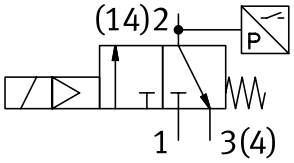	• Pilot air supply via duct 1 (internal pilot air) for the valve terminal's pressure zone (end plate/additional supply plate) • Without manual override (MO)
CS	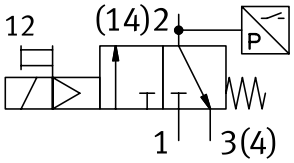	• Pilot air supply via duct 1 (internal pilot air) for the valve terminal's pressure zone (end plate/additional supply plate) • With manual override (MO)

Dimensions Download CAD data ➔ www.festo.com

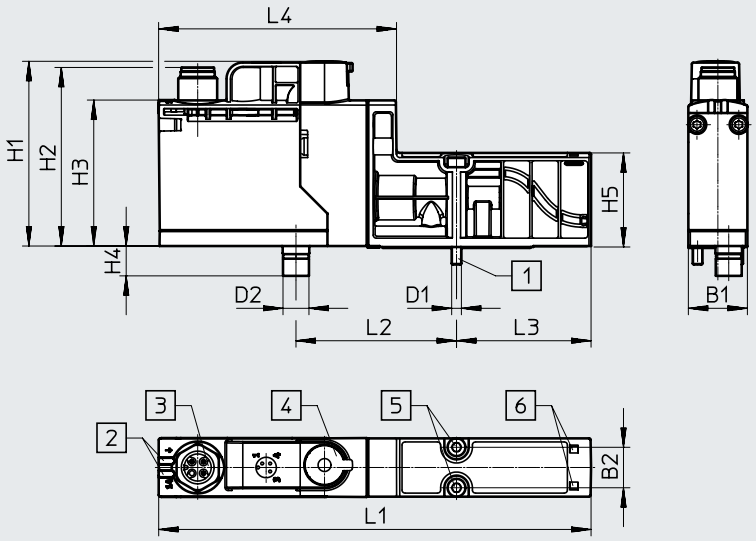

[1] Socket head screw M3x30-8.8
[2] Light emitting diodes (LED)
[3] M12 connection (optional)
[4] Manual override (MO), self-resetting
[5] Internal hexagon
[6] Space for inscription label

Type	B1	B2	D1	D2 ⌀	H1	H2	H3	H4	H5	L1	L2	L3	L4
VSVA-BT-M32CS...	18	12.5	M3	8	57	55.1	45	9.2	29	134	49.5	41.5	74

Datasheet – Pilot air switching valve for VTSA-F-CB

Ordering data

	Code	Description		Operating pressure[1] [MPa]	[bar]	Standard nominal flow rate[2] [l/min]	Exhausting [l/min]	Wt.[3] [g]	Part no.	Type
3/2-way solenoid valve, 24 V DC, plug-in design										
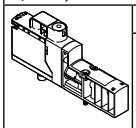	3/2-way solenoid valve NC, external pilot air supply for the valve terminal									
	CT	Control plug-in, pressure sensor plug-in, manual override (MO) self-resetting	18 mm	0.3 ... 1	3 ... 10	150	150	110	**8066573**	**VSVA-BT-M32CS2-MYE-A2-1T5L-PA**
	CT	Control plug-in, external pressure sensor M12, manual override (MO) self-resetting	18 mm	0.3 ... 1	3 ... 10	150	150	110	**8066572**	**VSVA-BT-M32CS2-MYE-A2-1T1L-PZ**
	CT	Control plug-in, pressure sensor plug-in, manual override (MO) concealed	18 mm	0.3 ... 1	3 ... 10	150	150	110	**8066575**	**VSVA-BT-M32CS2-MS-A2-1T5L-PA**
	CT	Control plug-in, external pressure sensor M12, manual override (MO) concealed	18 mm	0.3 ... 1	3 ... 10	150	150	110	**8066574**	**VSVA-BT-M32CS2-MS-A2-1T1L-PZ**
	3/2-way solenoid valve NC, internal pilot air supply for the valve terminal									
	CS	Control plug-in, pressure sensor plug-in, manual override (MO) self-resetting	18 mm	0.3 ... 1	3 ... 10	150	150	110	**8066569**	**VSVA-BT-M32CS1-MYE-A2-1T5L-PA**
	CS	Control plug-in, external pressure sensor M12, manual override (MO) self-resetting	18 mm	0.3 ... 1	3 ... 10	150	150	110	**8066568**	**VSVA-BT-M32CS1-MYE-A2-1T1L-PZ**
	CS	Control plug-in, pressure sensor plug-in, manual override (MO) concealed	18 mm	0.3 ... 1	3 ... 10	150	150	110	**8066571**	**VSVA-BT-M32CS1-MS-A2-1T5L-PA**
	CS	Control plug-in, external pressure sensor M12, manual override (MO) concealed	18 mm	0.3 ... 1	3 ... 10	150	150	110	**8066570**	**VSVA-BT-M32CS1-MS-A2-1T1L-PZ**

1) With an ambient temperature and a temperature of the medium from –5°C to +5°C and +40°C to 50°C, the maximum permissible operating pressure is 0.8 MPA or 8 bar.
2) +/– 15% to FN 942032
3) Weight of pilot air switching valve without manifold sub-base

Ordering data

	Code	Description		Wt.[1] [g]	Part no.	Type
Manifold sub-base for pilot air switching valve						
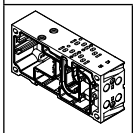	YB	For 2 valve positions (4 addresses) 1x valve position, 1x double solenoid valve, high flow	18 mm	434	**8068913**	**VABF-S4-2HS-G18-CB-2T5**
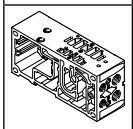	YC	For 2 valve positions (4 addresses) 1x valve position with CBUS communication, 1x double solenoid valve, high flow (with CBUS loop-through)	26 mm	512	**8068912**	**VABV-S4-12HS-G-CB-2T5**

1) Weight of pilot air switching valve without manifold sub-base

Datasheet – Soft-start valve for VTSA/VTSA-F

Function
without sensor

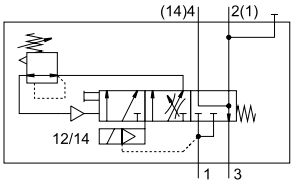

With sensor

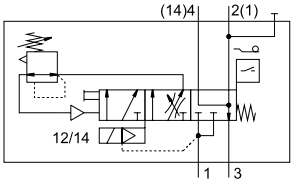

Flow rate
Pressurisation:
3000 l/min
Exhausting: 3300 l/min

Module width
43 mm

Temperature range
–5 ... +50°C

Operating pressure
2 ... 12 bar
0.2 ... 1.2 MPa

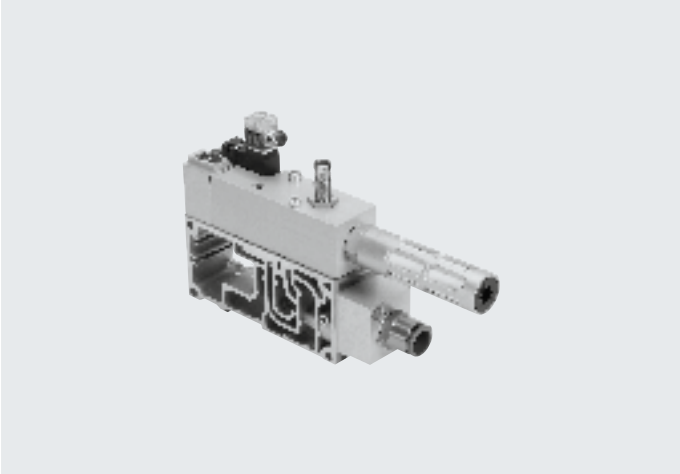

Description

Function

The purpose of the soft-start valve is to slowly and safely build up the supply pressure in duct 1 of the valve terminal or to quickly exhaust it via duct 1.
Switch-on takes place in two stages:

- First the working pressure for duct 1 gradually increases (the speed can be adjusted using a flow control screw).
- Once the working pressure in duct 1 reaches a previously set value, the soft-start valve switches to full operating pressure at duct 1 of the valve terminal.

The switching point for full operating pressure is set to 4 bar at the factory, but can be changed using an adjusting screw.

The full operating pressure is applied at duct 14 (pilot air) at all times. This pressure causes the valves on the valve terminal to immediately move to the required switching position, so an unspecified position is not possible.

Duct 1 of the valve terminal is exhausted via the soft-start valve's exhaust port only in the normal position, when the valve is not switched. The exhaust air can optionally be ducted with a QS fitting or using a silencer.
A detenting manual override with self-reset via an electrical control signal is available for maintenance and service purposes.

Note

When using "Protection against unexpected start-up":
Protection against unexpected activation of the manual override (MO) must be guaranteed in all operating modes.

Diagnostics

The piston position of the soft-start valve can be monitored by a sensor with integrated LED display. This sensor registers whether the valve has switched and thus whether the valve terminal is being supplied with compressed air.

Pressure sensing via a pressure gauge (optional) is also possible.

The soft-start valve can also be ordered with a sensor. A sensor cannot be retrofitted at a later date due to the calibration that is required.

Connecting cables with integrated LED display are provided for displaying the signal status.

Pilot air supply

The valve terminal can either be supplied with internal pilot air via the soft-start valve or with internal or external pilot air via the various end plate variants.

The pilot air supply for the valve terminal (internal/external) is determined by the seal between the manifold subbase and the soft-start valve.

The scope of delivery of the soft-start valve includes both the seal for internal pilot air supply (with drilled hole) and the seal for external pilot air supply (no drilled hole).

The soft-start valve itself is always supplied with internal pilot air.

Datasheet – Soft-start valve for VTSA/VTSA-F

Description

Creating pressure zones with a soft-start valve

The soft-start valve can be used for the pneumatic compressed air supply of the valve terminal or of a pressure zone. The soft-start valve can only be used as the sole compressed air supply component on valve terminals with one pressure zone or within a pressure zone.

If a soft-start valve in combination with a right end plate (code XP3) is chosen for a pressure zone, this pressure zone must have a supply plate with a blanking plug in duct 1 (code W).

When using a soft-start valve, a supply plate (with blanking plug in duct 1) is generally also required for this pressure zone to discharge the exhaust air (duct 3/5).

A supply plate is not required if the exhaust air (duct 3/5) in a pressure zone with soft-start valve can be discharged via the right end plate.

Constraints

Compressed air supply

There must be no other elements supplying compressed air in the pressure zone in which the soft-start valve is being used.

Exhaust air

Exhaust air cannot be expelled via the soft-start valve. If it is being used in a pressure zone with duct 3/5 separate, an exhaust plate is required.

Pilot air supply

If the soft-start valve is used for internal pilot air supply (duct 14), there must be no other pilot air supply within the valve terminal.

Reverse operation

The soft-start valve is not approved for reverse operation.

Note

Setting options as well as drawings with descriptions of the components for the soft-start valve can be found in the user documentation.
The adjusting screws are freely accessible once they are fitted.

Safety characteristics	
Conforms to	ISO 5599-2
Note on forced checking procedure	Switching frequency min. 1/month
Max. positive test pulse with logic 0 [µs]	2500[1)]
Max. negative test pulse with logic 1 [µs]	1400[1)]
Shock resistance	Shock test with severity level 2, to EN 60068-2-27
Vibration resistance	Transport application test with severity level 2, to EN 60068-2-6

1) Values apply only to types with direct voltage 24 V DC

General technical data	
Design	Piston spool
Actuation type	Electrical
Sealing principle	Soft
Type of mounting	On sub-base, ISO size 1 to ISO 5599-2
Mounting position	Any
Valve function	Soft-start function
Manual override	Detenting, self-resetting via electrical control signal, normal position on top, → page 194
Reset method	Mechanical spring
Type of actuation	Piloted
Pilot air supply	Internal, external
Flow direction	Not reversible
Switching position sensing	Switching position with sensor

Standard nominal flow rate [l/min]	
Pressurisation	3000
Exhausting	3300

Datasheet – Soft-start valve for VTSA/VTSA-F

Operating and environmental conditions		
Operating medium		Compressed air to ISO 8573-1:2010 [7:4:4]
Notes on operating/ pilot medium		Lubricated operation possible (in which case lubricated operation will always be required)
Operating pressure	[bar]	2 ... 12
	[MPa]	0.2 ... 1.2
Switchover pressure presetting	[bar]	4
	[MPa]	0.4
Ambient temperature	[°C]	–5 ... +50
Note on materials		RoHS-compliant

Valve switching times [ms]		
Valve switching time	On	17
	Off	50

Electrical data for soft-start valve		
Electrical connection		Plug, type C to EN 175301-803, square design
Nominal operating voltage	[V]	24 DC
Operating voltage range	[V]	24 DC ±10%
Characteristic coil data		24 V DC: 2.5 W
Degree of protection to EN 60529		IP65, NEMA 4 (for all types of signal transmission when mounted)

Electrical data for sensor			
Type		SIEN-M12B-PS-S-L	SIEN-M12B-NS-S-L
Electrical connection		1xM12 plug to EN 60947-5-2, 4-pin	
Switching output		PNP	NPN
Switching element function		N/O	
Signal status display		Yellow LED	
Operating voltage range	[V DC]	10 ... 30	
Residual ripple	[%]	±10	
Rated operating voltage	[V DC]	24	
Max. no-load supply current for sensor	[mA]	10	
Max. output current	[mA]	200	
Max. voltage drop	[V]	2	
Max. switching frequency	[Hz]	3000	
Short circuit current rating		Clocked	
Reverse polarity protection for sensor		For all electrical connections	
Measuring principle		Inductive	
Switching position sensing		Switching position with sensor	

Materials		
	Soft-start valve	Manifold sub-base
Housing	Wrought aluminium alloy	Die-cast aluminium
Seals	NBR, HNBR	–
Screws	Galvanised steel	–

Datasheet – Soft-start valve for VTSA/VTSA-F

Example 1: Pressure zone with soft-start valve and pilot air supply
Internal, external pilot air supply

Requirements
- Compressed air supply via soft-start valve
- Right end plate[1)]:
  Blanking plug in duct 1

For internal pilot air supply:
- Seal (soft-start valve - manifold sub-base) with pilot air supply bore "open" and
- Right end plate:
  Blanking plug in duct 14

For external pilot air supply:
- Seal (soft-start valve - manifold sub-base) with pilot air supply bore "closed" and
- Pilot air supply via duct 14 in the right end plate

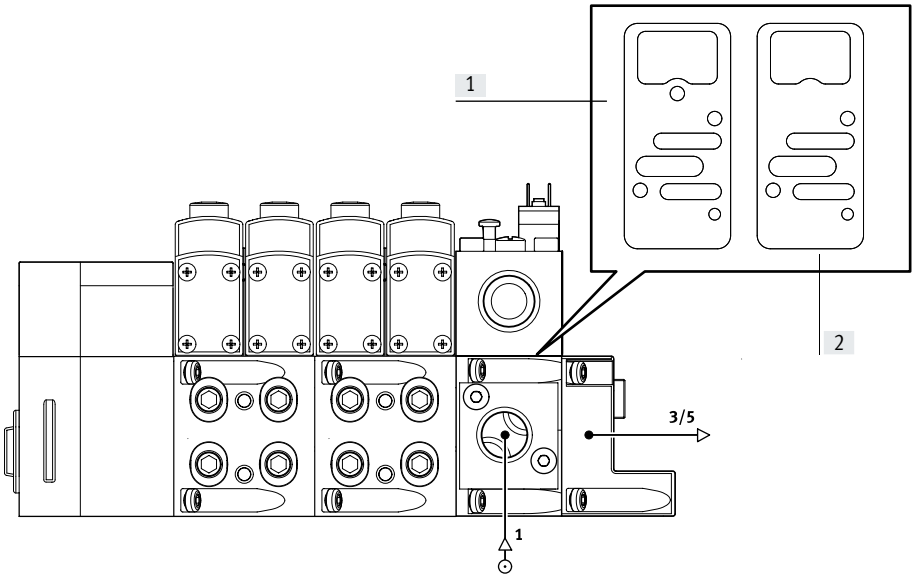

[1] Seal for internal pilot air supply
[2] Seal for external pilot air supply

1) With this configuration, a right end plate with pilot air selector cannot be used, as it doesn't allow the exhaust air to be discharged

Example 2: Pressure zone with soft-start valve, supply plate and pilot air supply
Internal, external pilot air supply

Requirements
- Compressed air supply via soft-start valve
- Supply plate:
  Blanking plug in duct 1
- Right end plate: blanking plug in duct 1, 3, 5 or
- Right end plate with pilot air selector

For internal pilot air supply:
- Seal (soft-start valve - manifold sub-base) with pilot air supply bore "open" and
- Right end plate: blanking plug in duct 14 or
- End plate with coding (position 2, internal pilot air supply)

For external pilot air supply:
- Seal (soft-start valve - manifold sub-base) with pilot air supply bore "closed" and
- Pilot air supply via duct 14 in the right end plate or
- End plate with coding (position 1, external pilot air supply)

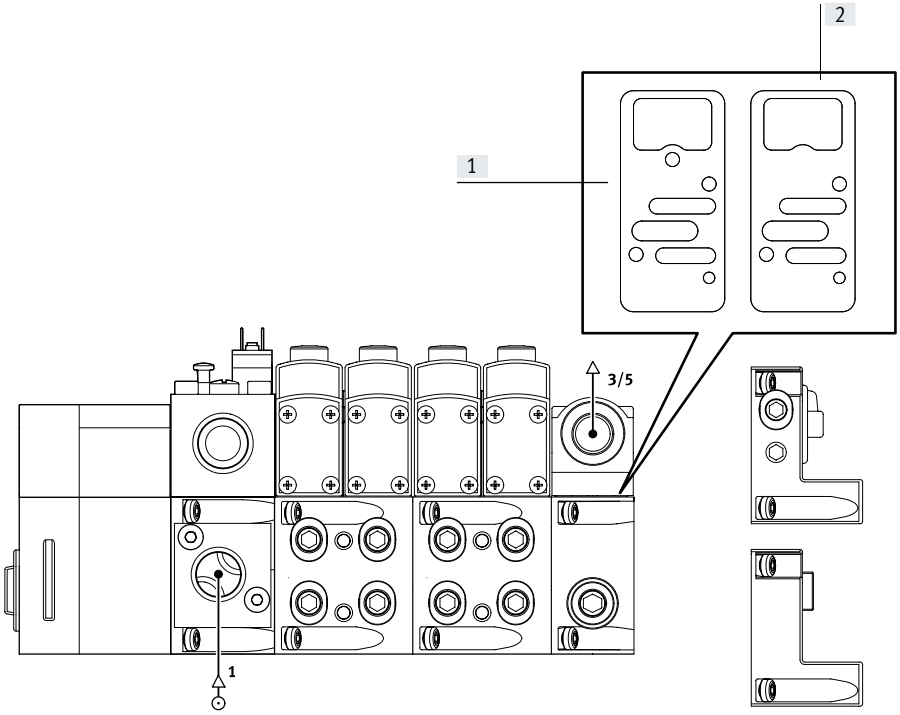

[1] Seal for internal pilot air supply
[2] Seal for external pilot air supply

Datasheet – Soft-start valve for VTSA/VTSA-F

Practical example 1: Valve terminal VTSA with CPX terminal (metal design) and soft-start valve

With internal pilot air (PP and XP2):

Selection no. in the digital customer information system: 539217

With external pilot air (PM and XP1):

Selection no. in the digital customer information system: 539217

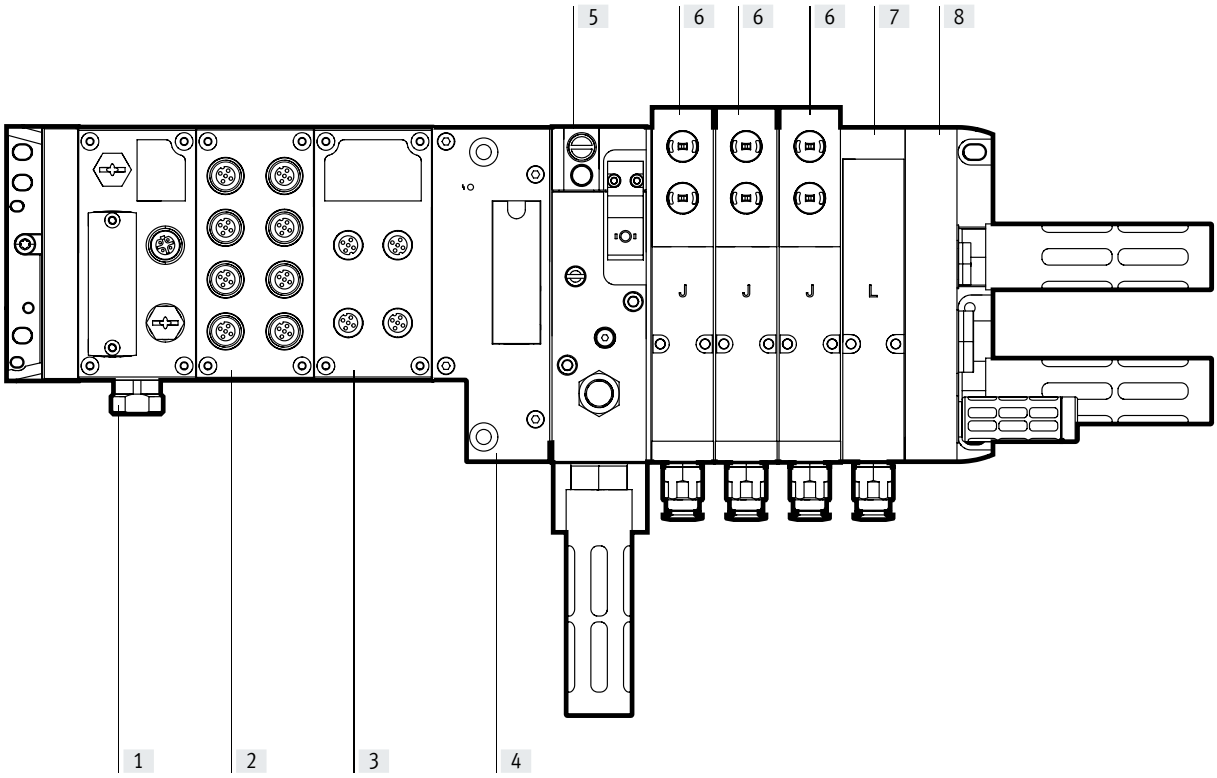

[1] Fieldbus node for EtherNet/IP or Modbus TCP
[2] Input module (16 digital inputs)
[3] Output module (8 digital outputs)
[4] CPX pneumatic interface
[5] Soft-start valve (PP – internal pilot air)
[5] Soft-start valve (PM – external pilot air)
[6] 5/2-way valve, double solenoid (J)
[7] Vacant position (L)
[8] Right end plate (XP2) with supply air/exhaust air, external pilot air supply, blanking plug in duct 1 and 14
[8] Right end plate (XP1) with supply air/exhaust air, external pilot air supply, blanking plug in duct 1

Selection with internal pilot air (PP and XP2):

Selection no. in online catalogue: 539217
Electrical part: 51E-F36GCQPNMKBLX-S+GSBA
Pneumatic part: 44P-N-XP2-SMPP-BB-3JL+UGBP1

Selection with external pilot air (PM and XP1):

Selection no. in online catalogue: 539217
Electrical part: 51E-F36GCQPNMKBLX-S+GSBA
Pneumatic part: 44P-N-XP1-SMPM-BB-3JL+UGBP1

Datasheet – Soft-start valve for VTSA/VTSA-F

Practical example 2: Valve terminal VTSA with CPX terminal (metal design), soft-start valve and switching position sensing

With external pilot air (PM and XP2):

Selection no. in the digital customer information system: 539217

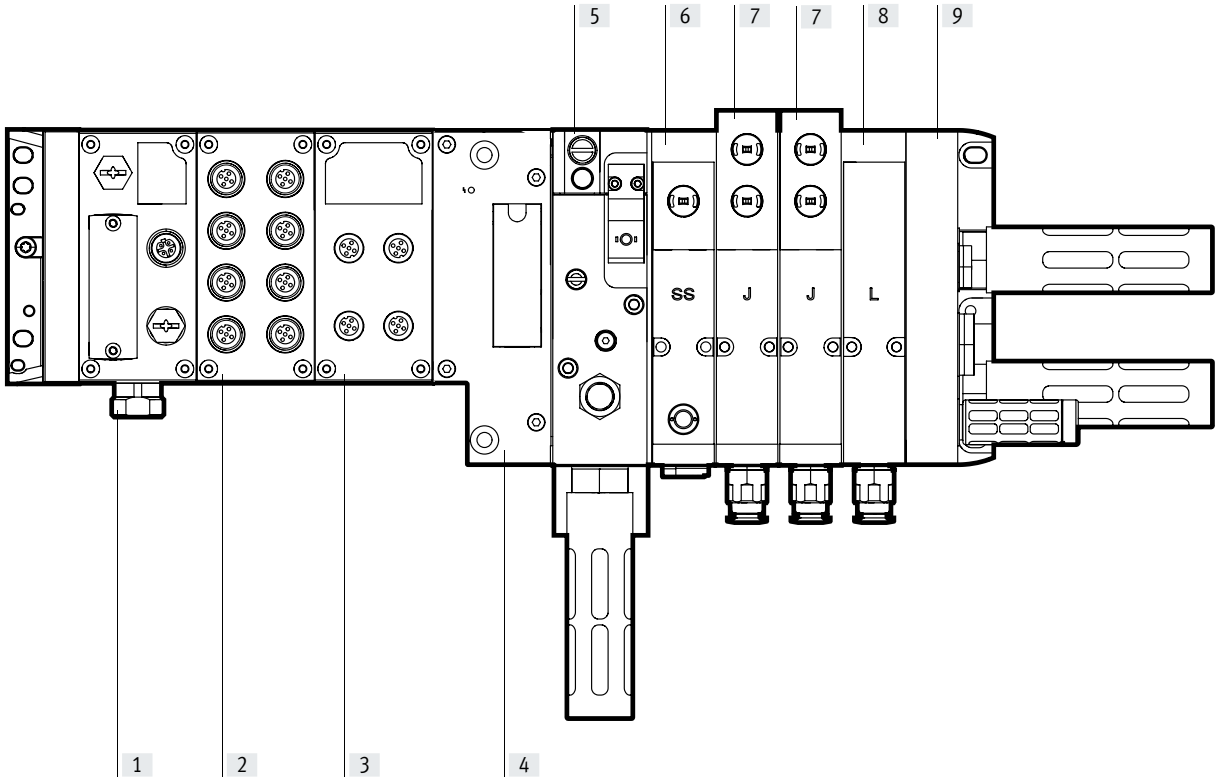

[1] Fieldbus node for EtherNet/IP or Modbus TCP
[2] Input module (16 digital inputs)
[3] Output module (8 digital outputs)
[4] CPX pneumatic interface
[5] Soft-start valve (PM – external pilot air)
[6] 5/2-way single solenoid valve, spring return, switching status indication with PNP sensor with 0.5 m connecting cable and push-in connector M12x1 (SS), and intermediate plate for switchable pilot air supply (ZO)
[7] 5/2-way double solenoid valve (J), width 26 mm
[8] Vacant position (L)
[9] Right end plate (XP2) with supply air/exhaust air, external pilot air supply, blanking plug in duct 1 and 14

Selection with external pilot air (PM and XP2), solenoid valve with switching position sensing (SS) and intermediate plate for switchable pilot air supply (ZO)

Selection no. in online catalogue: 539217
Electrical part: 51E-F36GCQPNMKBLX-S+GSBA
Pneumatic part: 44P-N-XP2-SMPM-BB-SSZOJJL+UGCGBP1

Datasheet – Soft-start valve for VTSA/VTSA-F

Practical example 3: Valve terminal VTSA with CPX terminal (metal design), switching position sensing, soft-start valve and 2 pressure zones

With external pilot air (PM and XP2)

Selection no. in the digital customer information system: 539217

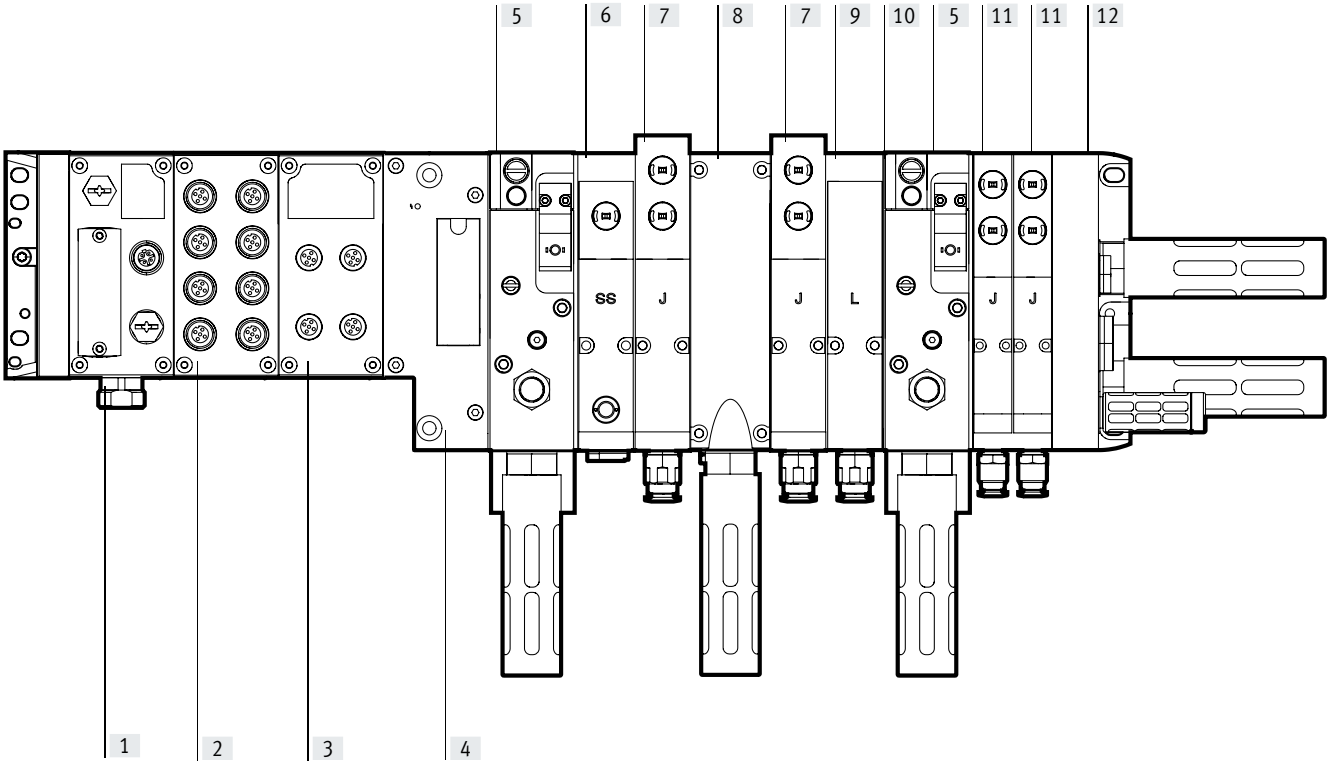

[1] Fieldbus node for EtherNet/IP or Modbus TCP
[2] Input module (16 digital inputs)
[3] Output module (8 digital outputs)
[4] CPX pneumatic interface
[5] Soft-start valve for one pressure zone (PM – external pilot air)
[6] 5/2-way single solenoid valve, spring return, switching status indication with PNP sensor with 0.5 m connecting cable and push-in connector M12x1 (SS), and intermediate plate for switchable auxiliary pilot air supply (ZO)
[7] 5/2-way double solenoid valve (J), width 26 mm
[8] Exhaust plate (W) for ducts 3/5
[9] Vacant position (L)
[10] Duct separation (S) 1, 3, 5
[11] 5/2-way double solenoid valve (J), width 18 mm
[12] Right end plate (XP2) with supply air/exhaust air, external pilot air supply, blanking plug in duct 1 and 14

Selection with external pilot air (PM and XP2), solenoid valve with switching position sensing (SS) and intermediate plate for switchable pilot air supply and 2 pressure zones

Selection no. in online catalogue: 539217
Electrical part: 51E-F36GCQPNMKBLX-S+GSBA
Pneumatic part: 44P-N-XP2-LSMPM-BWBSPMA-SSZOJJLJJ+UGCGBP1

Electrical connection of pneumatic components

The solenoid valve with switching position sensing (SS), with sensor connection M12 is connected to the CPX input module using an appropriate connecting cable in order to link the sensor signal to the CPX system.

The soft-start valve (PM – with sensor PNP) is connected to the CPX input module using an appropriate connecting cable (GC) in order to integrate the sensor signal into the CPX system.

A connecting cable (GBP1) to/from the CPX output module is used to control the soft-start valve (PM). (Control signal)

Datasheet – Soft-start valve for VTSA/VTSA-F

Dimensions Download CAD data ➔ www.festo.com

Soft-start valve

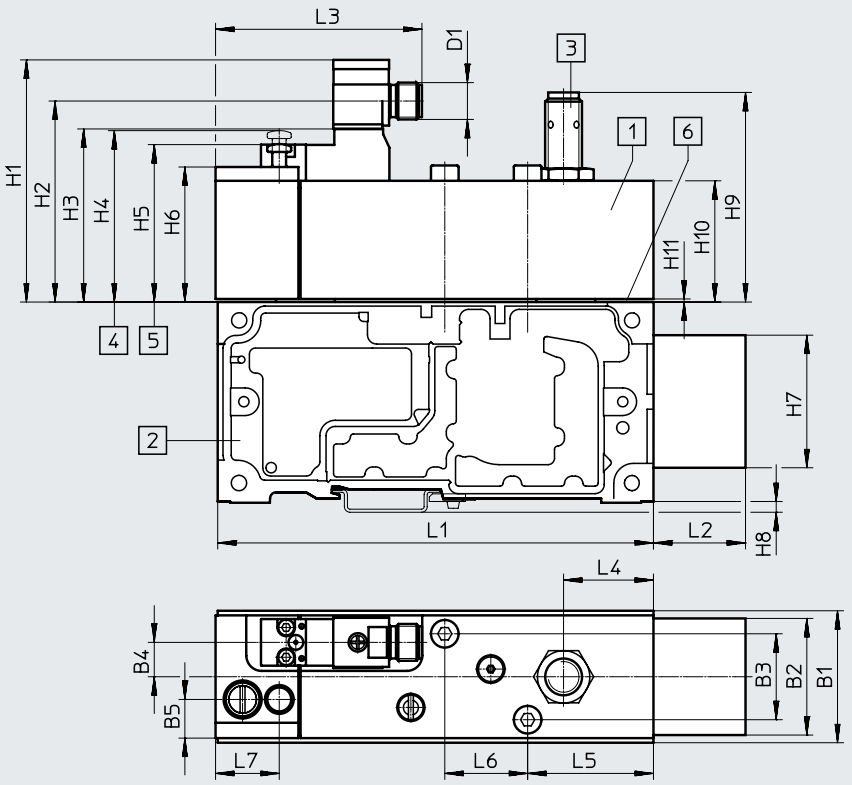

[1] Soft-start valve, (port pattern to ISO 5599-2)

[2] Manifold sub-base with connecting adapter (ducts 2 and 4), pneumatic connection G1/2

[3] Soft-start valve optionally with sensor or protective cap

[4] Manual override, normal position (unactuated)

[5] Manual override, switching position (actuated)

[6] Seal for internal or external pilot air supply of the valve terminal

Type	B1	B2	B3	B4	B5	D1	L1	L2	L3	L4	L5	L6	L7
VABF-S6-1-P5A4-G12-4- ...	43	36.5	28	11.2	12.6	M12x1	142	30	67.3	29.3	41	27	20.8

Type	H1	H2	H3	H4	H5	H6	H7	H8	H9	H10	H11
VABF-S6-1-P5A4-G12-4- ...	78.9	65.5	56.4	55.9	51.5	44	41.2	3.5	68.3	39.5	1

Seal [1] between soft-start valve and manifold sub-base

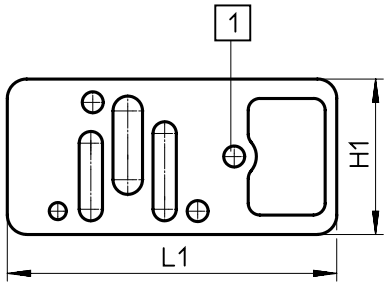

[1] With drilled hole, internal pilot air supply

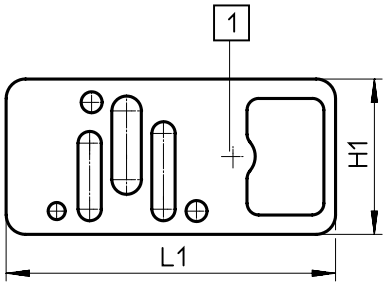

[1] Without drilled hole, external pilot air supply

Type	H1	L1
VABD-S6- ...	40	84.8

1) Seals are included with the soft-start valve

Datasheet – Soft-start valve for VTSA/VTSA-F

Ordering data

	Terminal code	Description	Weight [g]	Part no.	Type
Soft-start valve, 24 V DC					
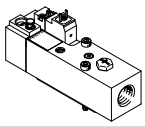	–	Without sensor output, pneumatic connection G1/2 (with seals for internal and external pilot air)	590	**558230**	**VABF-S6-1-P5A4-G12-4-1**
	PN	Seal for external pilot air (without drilled hole)			
	PQ	Seal for internal pilot air (with drilled hole)			
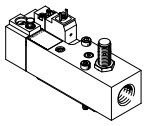	–	With sensor output PNP, pneumatic connection G1/2 (with seals for internal and external pilot air)	605	**557377**	**VABF-S6-1-P5A4-G12-4-1-P**
	PM	Seal for external pilot air (without drilled hole)			
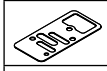	PP	Seal for internal pilot air (with drilled hole)			
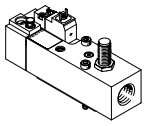	–	With sensor output NPN, pneumatic connection G1/2 (with seals for internal and external pilot air)	605	**558233**	**VABF-S6-1-P5A4-G12-4-1-N**
	PK	Seal for external pilot air (without drilled hole)			
	PO	Seal for internal pilot air (with drilled hole)			
Manifold sub-base					
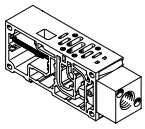	–	Suitable for a soft-start valve (ports for ducts 2 and 4 are combined), pneumatic connection G1/2	570	**556989**	**VABV-S6-1Q-G12**

Accessories – Soft-start valve for VTSA/VTSA-F

Ordering data

Designation	Code	Description		Part no.	Type
Cover cap					
	–	M12, for sealing the sensor opening	10 pieces	**165592**	**ISK-M12**
Electrical connection for soft-start valve					
	P1	• Angled socket, type C, 2-pin, with LED • Straight plug, 1xM12, 2-pin • 24 V DC		**188024**	**MSSD-EB-M12-MONO**
	GB	• Straight socket, 1xM12, 5-pin • Open end, 4-core	5 m	**541328**	**NEBU-M12G5-K-5-LE4**
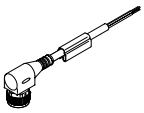	–	• Angled socket, 1xM12, 5-pin • Open end, 4-core	**5 m**	**541329**	**NEBU-M12W5-K-5-LE4**
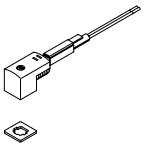	GG	• Angled socket, type C, 3-pin, with LED • Open end, 3-core • 24 V DC, PVC	2.5 m	**151688**	**KMEB-1-24-2.5-LED**
	GH		5 m	**151689**	**KMEB-1-24-5-LED**
	GJ		10 m	**193457**	**KMEB-1-24-10-LED**
	GK	• Angled socket, type C, 3-pin • Open end, 3-core • 230 V AC, PVC	2.5 m	**151690**	**KMEB-1-230AC-2.5**
	GL		5 m	**151691**	**KMEB-1-230AC-5**
Connecting cable for electrical connection of the proximity switch					
	–	• Straight socket, 1xM12, 5-pin • Open end, 4-core	5 m	**541328**	**NEBU-M12G5-K-5-LE4**
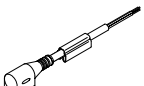	GC	• Angled socket, 1xM12, 5-pin • Open end, 4-core	**5 m**	**541329**	**NEBU-M12W5-K-5-LE4**
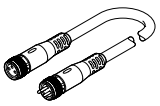	–	Modular system for a choice of connecting cables		**–**	**NEBU-...** ➔ Internet: nebu
Silencer					
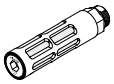	U	Standard design, connecting thread (1 piece)	G1/2	**6844**	**U-1/2-B**
	A	Sintered design, connecting thread (10 pieces)	G1/2	**1205863**	**AMTE-M-LH-G12**
Pneumatic connection accessories					
A selection of possible fittings, blanking plugs, silencers and other pneumatic accessories can be found in the chapter **Accessories** ➔ page: 260 or on the website via the individual search terms: **Internet** ➔ connection technology, silencer, blanking plug					

Datasheet – Soft-start valve for VTSA-F-CB

Function

Without manual override

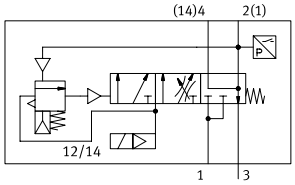

With manual override

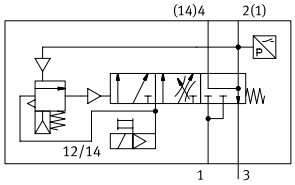

- Flow rate
  Pressurisation:
  3000 l/min
  Exhausting: 3300 l/min
- Module width
  41 mm
- Temperature range
  –5 ... +50°C
- Operating pressure
  2 ... 10 bar
  0.2 ... 1 MPa

Description

Smart valve functions

The basic functions are the same as for the familiar soft-start valve.
There is a variant with internal pilot air supply (code PM) and a variant without internal pilot air supply (code PN). In addition, the new smart soft-start valve has:

- An integrated pressure sensor for sensing the exhausted position
- A revised design of the manual override with protection against unintended actuation, as well as an automatic reset

Like the familiar soft-start valve, its purpose is to slowly and safely build up the supply pressure in duct 1 of the valve terminal or to quickly exhaust it.
Switch-on takes place in two stages:

- First the working pressure for duct 1 gradually increases (the speed can be adjusted using a flow control screw).
- Once the working pressure in duct 1 reaches half the operating pressure, the soft-start valve switches to full operating pressure at duct 1 of the valve terminal.

The switching point is permanently set at 50% of the operating pressure.
The full operating pressure is applied at duct 14 (pilot air) at all times. This pressure causes the valves on the valve terminal to immediately move to the required switching position, so an unspecified position is not possible.

Duct 1 of the valve terminal is exhausted via the soft-start valve's exhaust port only in the normal position, when the valve is not switched. The exhaust air can optionally be ducted with fittings for compressed air tubing with standardised O.D. or using a silencer.
A detenting manual override with self-reset via an electrical control signal is available for maintenance and service purposes.

Safety characteristics		
Max. positive test pulse with logic 0	[µs]	2000
Max. negative test pulse with logic 1	[µs]	1200
Shock resistance		Shock test with severity level 2, to EN 60068-2-27
Vibration resistance		Transport application test with severity level 2, to EN 60068-2-6

Datasheet – Soft-start valve for VTSA-F-CB

General technical data		
Design		Piston spool valve
Grid dimension	[mm]	41
Valve size	[mm]	40
Overlap		Negative overlap
Actuation type		Electrical
Sealing principle		Soft
Type of mounting		On sub-base
Mounting position		Any
Valve function		soft-start and exhaust function
Manual override		Detenting, self-resetting via electrical control signal (part numbers 8067407 and 8067405), normal position on top ➔ page 202
Manual override		None (part numbers 8067411 and 8067409)
Reset method		Mechanical spring
Type of actuation		Piloted
Pilot air supply		For soft-start valve: always internal via valve terminal
		For valve terminal: internal via soft-start valve (part nos. 8067407, 8067411)
		For valve terminal: internal, not via soft-start valve (part nos. 8067405, 8067409)
Flow direction		Not reversible
Pneumatic connection 3		G1/2
MTTF, subcomponent		452 years, pressure switch

Standard nominal flow rate [l/min]	
Pressurisation	3000
Exhausting	3300

Operating and environmental conditions			
Type		VABF-S6-1-P5A4S1-...	VABF-S6-1-P5A4S2-...
Operating medium		Compressed air to ISO 8573-1:2010 [7:4:4]	
Pilot medium		Compressed air to ISO 8573-1:2010 [7:4:4]	
Notes on operating/ pilot medium		Lubricated operation not possible	
Operating pressure	[bar]	3 ... 10	2 ... 10
	[MPa]	0.3 ... 1	0.2 ... 1
Ambient temperature	[°C]	−5 ... +50	
Temperature of medium	[°C]	−5 ... +50	
Corrosion resistance class CRC[1)]		0	

1) Corrosion resistance class CRC 0 to Festo standard FN 940070
No corrosion stress. Applies to small, visually unimportant standards-based parts such as threaded pins, circlips and clamping sleeves which are usually only available on the market in a phosphated or burnished version (and possibly oiled) as well as to ball bearings (for components < CRC 3) and plain bearings.

Datasheet – Soft-start valve for VTSA-F-CB

Electrical data for soft-start valve		
Electrical actuation		Fieldbus
Electrical connection		Plug-in
Nominal operating voltage	[V]	24 DC
Operating voltage range	[V]	24 DC ±10%
Characteristic coil data		24 V DC: 1.6 W
Permissible voltage fluctuations	[%]	±10%
Degree of protection to EN 60529		IP65 (for all types of signal transmission when mounted)
Pressure sensor		Integrated (plug-in)
Sensor evaluation		Internal
Switching element function		N/C
Switching position sensing		Via pressure switch, exhausted status
Signal status display		Yellow LED, valve control
		Green LED, pressure switch, exhausted status
Duty cycle	[%]	100

Materials		
	Soft-start valve	Manifold sub-base
Housing	Wrought aluminium alloy	Die-cast aluminium
Seals	NBR, HNBR	–
Screws	Galvanised steel	–
Note on materials	RoHS-compliant	

Connection and display components

Soft-start valve VABF-S6-1-P5A4-... with manifold sub-base

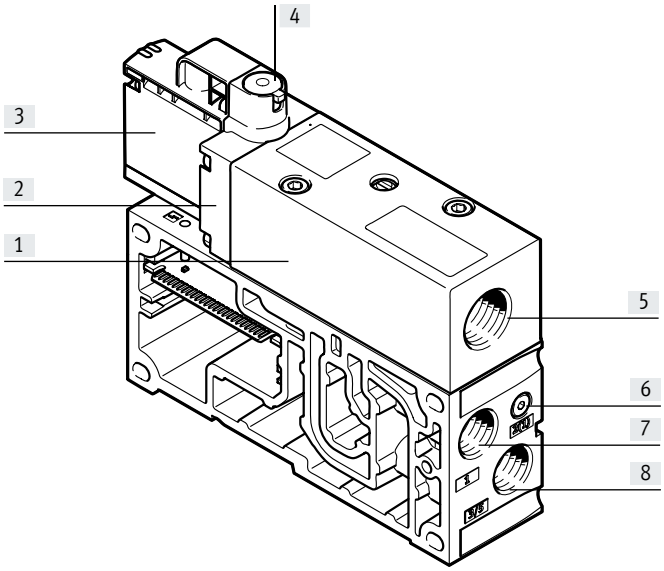

[1] Basic valve housing
[2] Intermediate plate
[3] Pilot control
[4] Manual override (MO) (optional)
[5] Exhaust air port for duct 1
[6] Pressure sensing for duct 1
[7] Compressed air supply port
[8] Exhaust air port for duct 3/5

Note

Detailed information on the manual override can be found in the user documentation.

➔ Internet: User documentation

Datasheet – Soft-start valve for VTSA-F-CB

Valve function Terminal code	Circuit symbol	Description
PM	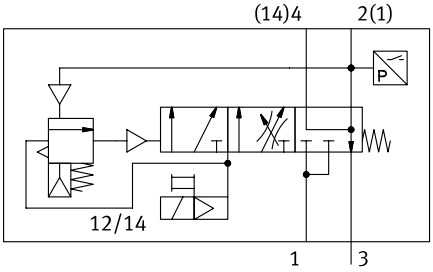	• Soft-start valve with pilot air supply • Soft-start valve with manual override (MO)
PM	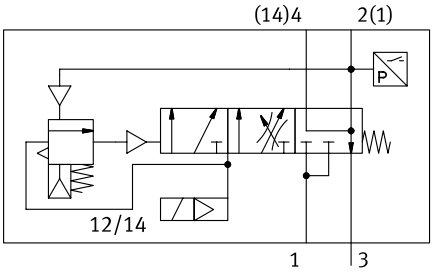	• Soft-start valve with pilot air supply • Soft-start valve without manual override (MO)
PN	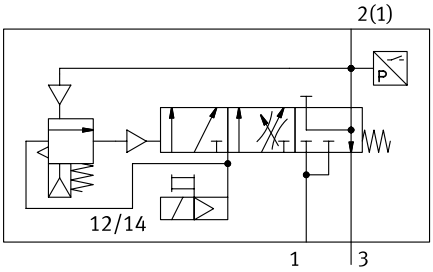	• Soft-start valve without pilot air supply • Soft-start valve with manual override (MO)
PN	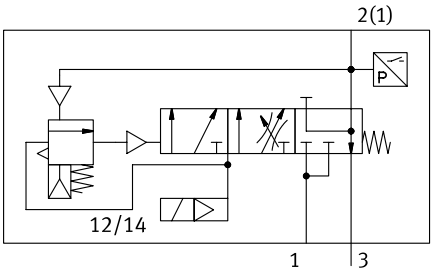	• Soft-start valve without pilot air supply • Soft-start valve without manual override (MO)

Datasheet – Soft-start valve for VTSA-F-CB

Dimensions Download CAD data ➔ www.festo.com

Soft-start valve with manifold sub-base

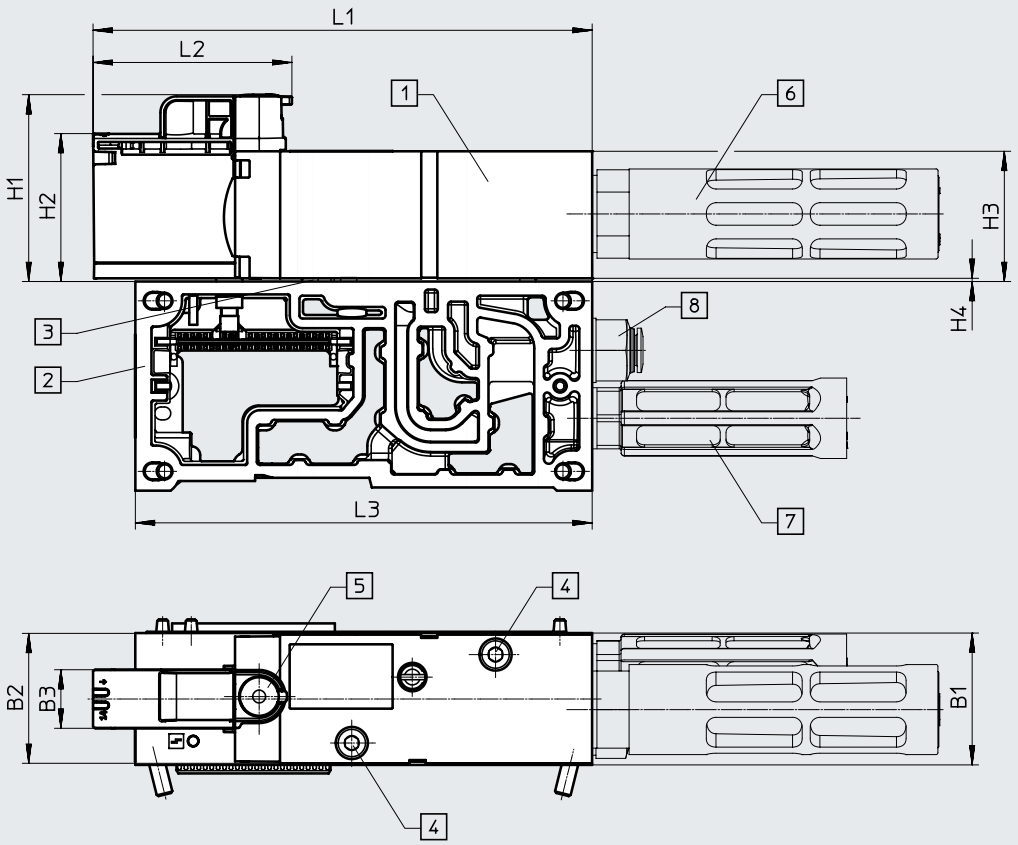

[1] Soft-start valve
[2] Manifold sub-base, pneumatic connection G3/8
[3] Seal
[4] Socket head screw M5x45 for manifold sub-base (captive)
[5] Manual override, self-resetting (code: YE) or concealed (code: S)
[6] Silencer, connection size G1/2
[7] Silencer, connection size G3/8
[8] Fitting connection size G3/8

Type	B1	B2	B3	H1	H2	H3	H4	L1	L2	L3
VABF-S6-1-P5A4...-G12-1T5-PA	41	40.4	18.2	58.1	46	40.5	1	155.1	60.3	142

Seal [1] between soft-start valve and manifold sub-base

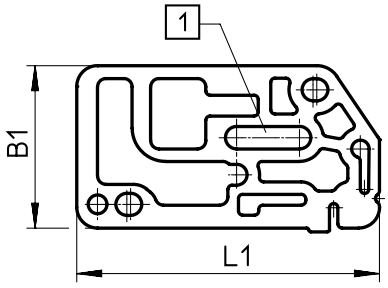

[1] With elongated hole, internal pilot air supply

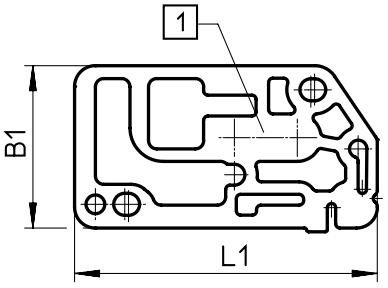

[1] Without elongated hole, external pilot air supply

Type	B1	L1
VABF-S6-1-P5A4Z ...	39	72.7

1) Seals are included with the soft-start valve

Accessories – Soft-start valve for VTSA-F-CB

Ordering data

	Code	Description		Operating pressure [MPa]	Operating pressure [bar]	Standard nominal flow rate[1] Pressurisation [l/min]	Standard nominal flow rate[1] Exhausting [l/min]	Wt. [g]	Part no.	Type
Soft-start valve, without manifold sub-base										
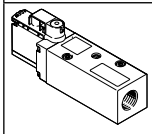	PM	Pilot pressure build-up from duct 1 (S1)	Manual override (MO), self-resetting	0.3 ... 1	3 ... 10	3000	3300	466	**8067407**	**VABF-S6-1-P5A4S1YE-G12-1T5-PA**
			Manual override (MO), concealed	0.3 ... 1	3 ... 10	3000	3300	466	**8067411**	**VABF-S6-1-P5A4S1S-G12-1T5-PA**
	PN	No pilot pressure build-up from duct 1 (S2)	Manual override (MO), self-resetting	0.2 ... 1	2 ... 10	3000	3300	466	**8067405**	**VABF-S6-1-P5A4S2YE-G12-1T5-PA**
			Manual override (MO), concealed	0.2 ... 1	2 ... 10	3000	3300	466	**8067409**	**VABF-S6-1-P5A4S2S-G12-1T5-PA**

1) +/– 15% to FN 942032

Ordering data

	Code	Description	Wt. [g]	Part no.	Type
Manifold sub-base for soft-start valve					
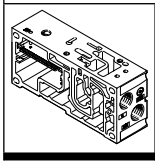	PV	• With CBUS loop-through • Sensor evaluation: internal • Duct 3/5 combined • Only in combination with pneumatic interface with voltage zone • Pneumatic connection G3/8	421	**8068609**	**VABV-S6-1Q-G38-CB1-T5**

Datasheet – Pneumatic interface for VTSA-F-CB

- ϟ - Voltage
  24 V DC

Description

Up to three safe voltage zones can be formed in the pneumatic part of the valve terminal using the pneumatic interface.

There is also a variant available which uses a safe voltage zone as an external output.

The pneumatic interfaces (zone extensions) can be placed centrally in the pneumatic section of a valve terminal VTSA-F-CB and they extend the valve terminal by up to 3 additional (safe) voltage zones.

Function

Two different equipment levels:
- Formation of up to three safe internal voltage zones
- Formation of up to two safe internal voltage zones and one safe external voltage zone

- Integrated driver levels for addressing up to 24 valves within the first safe voltage zone

- Integrated diagnostics on short circuit and overload of the controlled valve coils

- Integrated diagnostics for load voltage undervoltage

Datasheet – Pneumatic interface for VTSA-F-CB

General technical data		
Type		VABA-S6-1-X2-3V-CB-AL
Max. no. of valve positions		12 with double solenoid valves
		24 with single solenoid valves
Product weight	[g]	1388

Electrical data		
Type		VABA-S6-1-X2-3V-CB-AL
Electrical connection		3x M12x1, A-coded
		5-pin
		Plug
		Via CPX
Operating voltage range	[V DC]	21.6 ... 26.4
Intrinsic current consumption at nominal operating voltage	[mA]	Typically 11 (operating voltage supply for electronics)
		Typically 45 (load voltage supply for valves)
Max. power supply per channel	[A]	0.2
Max. aggregate current per module	[A]	6
Nominal operating voltage	[V DC]	24
Degree of protection		IP65
		NEMA 4

Operating and environmental conditions		
Type		VABA-S6-1-X2-3V-CB-AL
Ambient temperature	[°C]	–5 ... 50

Materials	
Type	VABA-S6-1-X2-3V-CB-AL
Note on materials	RoHS-compliant
Information on materials: Housing	Die-cast aluminium
Information on materials: Cover	PA
Corrosion resistance class CRC	0[1)]
LABS (PWIS) conformity	VDMA24364-B1/B2-L

1) Corrosion resistance class CRC 0 to Festo standard FN 940070
No corrosion stress. Applies to small, visually unimportant standard parts such as threaded pins, circlips and clamping sleeves which are usually only available on the market in a phosphated or burnished version (and possibly oiled) as well as to ball bearings (for components < CRC 3) and plain bearings.

Datasheet – Pneumatic interface for VTSA-F-CB

General technical data			
Type		VABA-S6-1-X2-F1-CB-AL	VABA-S6-1-X2-F1-CB2-AL
Max. no. of valve positions		12 with double solenoid valves	12 with double solenoid valves
		24 with single solenoid valves	24 with single solenoid valves
Product weight	[g]	1542	1576

Electrical data			
Type		VABA-S6-1-X2-F1-CB-AL	VABA-S6-1-X2-F1-CB2-AL
I/O output, function		–	Power supply, valve
I/O output, connection type		–	Plug
I/O output, connection technology		–	7/8'' round plug connector
I/O output, number of pins		–	5
Electrical connection		Via CPX	Via CPX
Operating voltage range	[V DC]	21.6 ... 26.4	21.6 ... 26.4
Intrinsic current consumption at nominal operating voltage	[mA]	Typically 15 El. w/o CPX-FVDA-P2	Typically 15 El. w/o CPX-FVDA-P2
		Typically 25 El. with CPX-FVDA-P2	Typically 25 El. with CPX-FVDA-P2
Max. power supply per channel	[A]	0.2	0.2
Max. aggregate current per module	[A]	2	2
Nominal operating voltage	[V DC]	24	24
Degree of protection		IP65	IP65

Operating and environmental conditions			
Type		VABA-S6-1-X2-F1-CB-AL	VABA-S6-1-X2-F1-CB2-AL
Storage temperature	[°C]	–20 ... 60	–
Ambient temperature	[°C]	–	–5 ... 50
Vibration resistant		Transport application test with severity level 2 to FN 942017-4 and EN 60068-2-6	Transport application test with severity level 2 to FN 942017-4 and EN 60068-2-6
Shock resistance		Shock test with severity level 2 to FN 942017-5 and EN 60068-2-27	Shock test with severity level 2 to FN 942017-5 and EN 60068-2-27

Materials		
Type	VABA-S6-1-X2-F1-CB-AL	VABA-S6-1-X2-F1-CB2-AL
Note on materials	RoHS-compliant	
Information on materials: Sub-base	Die-cast aluminium	
Information on materials: Cover	PA	
Information on materials: Screws	Steel	
Information on materials: Seals	NBR	
Corrosion resistance class CRC	0[1)]	
CE marking	To EU EMC Directive[2)]	
	To EU RoHS Directive[2)]	

1) Corrosion resistance class CRC 0 to Festo standard FN 940070
No corrosion stress. Applies to small, visually unimportant standard parts such as threaded pins, circlips and clamping sleeves which are usually only available on the market in a phosphated or burnished version (and possibly oiled) as well as to ball bearings (for components < CRC 3) and plain bearings.

2) For information about the area of use, see the EC declaration of conformity at: www.festo.com/catalogue/... → Support/Downloads.
If the devices are subject to usage restrictions in residential, commercial or light-industrial environments, further measures for the reduction of the emitted interference may be necessary.

Datasheet – Pneumatic interface for VTSA-F-CB

General technical data			
Type		VABA-S6-1-X2-F2-CB-AL	VABA-S6-1-X2-F2-CB2-AL
Max. no. of valve positions		12 with double solenoid valves	12 with double solenoid valves
		24 with single solenoid valves	24 with single solenoid valves
Product weight	[g]	1562	1596

Electrical data			
Type		VABA-S6-1-X2-F2-CB-AL	VABA-S6-1-X2-F2-CB2-AL
I/O output, function		Safe digital output	
I/O output, connection type		Socket	
I/O output, connection technology		M12x1, A-coded to EN 61076-2-101	
I/O output, number of pins		5	
I/O valve, function		–	Power supply, valve
I/O valve, connection type		–	Plug
I/O valve, connection technology		–	7/8'' round plug connector
I/O valve, number of pins		–	5
Electrical connection		Via CPX	
Operating voltage range	[V DC]	21.6 ... 26.4	
Intrinsic current consumption at nominal operating voltage	[mA]	Typically 15 El. w/o CPX-FVDA-P2	
		Typically 25 El. with CPX-FVDA-P2	
Max. power supply per channel	[A]	0.2	
Max. aggregate current per module	[A]	2	
Nominal operating voltage	[V DC]	24	
Degree of protection		IP65	

Operating and environmental conditions			
Type		VABA-S6-1-X2-F2-CB-AL	VABA-S6-1-X2-F2-CB2-AL
Storage temperature	[°C]	–	–20 ... 60
Ambient temperature	[°C]	–5 ... 50	
Vibration resistant		Transport application test with severity level 2 to FN 942017-4 and EN 60068-2-6	Transport application test with severity level 2 to FN 942017-4 and EN 60068-2-6
Shock resistance		Shock test with severity level 2 to FN 942017-5 and EN 60068-2-27	Shock test with severity level 2 to FN 942017-5 and EN 60068-2-27

Materials		
Type	VABA-S6-1-X2-F2-CB-AL	VABA-S6-1-X2-F2-CB2-AL
Note on materials	RoHS-compliant	
Information on materials: Sub-base	Die-cast aluminium	
Information on materials: Cover	PA	
Information on materials: Screws	Steel	
Information on materials: Seals	NBR	
Corrosion resistance class CRC	0[1)]	
CE marking	To EU EMC Directive[2)]	
	To EU RoHS Directive[2)]	

1) Corrosion resistance class CRC 0 to Festo standard FN 940070
No corrosion stress. Applies to small, visually unimportant standard parts such as threaded pins, circlips and clamping sleeves which are usually only available on the market in a phosphated or burnished version (and possibly oiled) as well as to ball bearings (for components < CRC 3) and plain bearings.

2) For information about the area of use, see the EC declaration of conformity at: www.festo.com/catalogue/... → Support/Downloads.
If the devices are subject to usage restrictions in residential, commercial or light-industrial environments, further measures for the reduction of the emitted interference may be necessary.

Datasheet – Pneumatic interface for VTSA-F-CB

Ordering data

	Code	Description	Part no.	Type
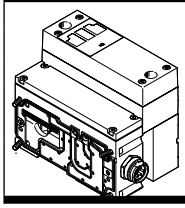	XB	Pneumatic interface for extending by 3 external voltage zones	**8152438**	**VABA-S6-1-X2-3V-CB-AL**
	XC	Pneumatic interface for extending by 3 safe internal zones (PROFIsafe)	**8152437**	**VABA-S6-1-X2-F1-CB-AL**
	XD	Pneumatic interface for extending by 2 safe internal zones + 1 safe output (PROFIsafe)	**8152436**	**VABA-S6-1-X2-F2-CB-AL**
	PC	Pneumatic interface with additional power supply for extending by 3 safe internal zones (PROFIsafe)	**8152435**	**VABA-S6-1-X2-F1-CB2-AL**
	PD	Pneumatic interface with additional power supply for extending by 2 safe internal zones + 1 safe output (PROFIsafe)	**8152434**	**VABA-S6-1-X2-F2-CB2-AL**

Datasheet – Vacuum block for VTSA/VTSA-F

Function

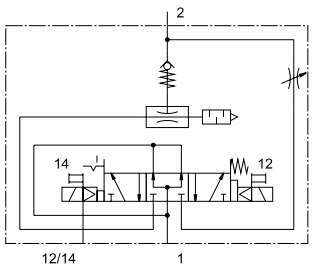

Vacuum Ejection

Vacuum block width
53 mm

Voltage
24 V DC

Operating pressure
4 ... 8 bar
0.4 ... 0.8 MPa

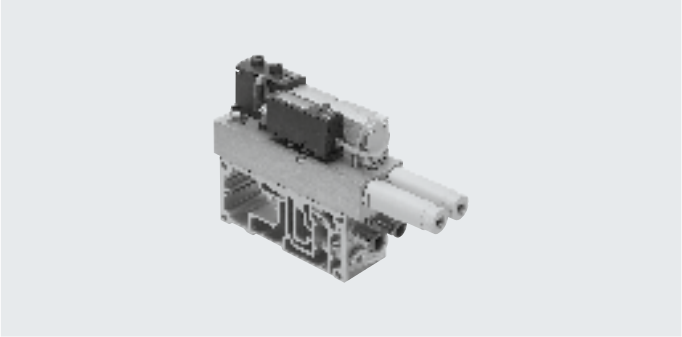

Description

The vacuum block can be integrated into the existing valve terminal VTSA/VTSA-F. To do this, the vacuum block is screwed to a manifold sub-base for 2 valve positions, width 26 mm.

The vacuum block is used in conjunction with a suction gripper to pick up, hold and place components. Picking up and holding is carried out by a suction gripper using a vacuum.

Once the component has been positioned, it is released by an ejector pulse. This ejector pulse is created by pressurising the vacuum system so that the vacuum briefly collapses. The ejector pulse can be set.

Note
The vacuum block can be operated in combination with the vertical stacking for pilot air switch-off (intermediate plate VABF-S4-1-S plus 5/2-way valve) on the valve terminal VTSA/VTSA-F.

Function

The vacuum block VABF-S4-1-V2B1... is used to generate a vacuum. The generated vacuum and a suction gripper produce a force which is used to grip and transport a workpiece. The supply of compressed air for vacuum generation is controlled by a solenoid valve. The vacuum is generated by actuating solenoid coil 12.

The setpoint value set at duct B for the generated vacuum is monitored via a vacuum sensor (with switching output). Vacuum generation reverts to a self-holding phase after reaching the setpoint value. The vacuum block controls the vacuum generation process independently within the range of the set switching points (air saving function).

The integrated solenoid valve is used to generate an ejector pulse by activating coil 14. The workpiece is thus safely released from the suction cup with connector and the vacuum is rapidly reduced. The length of the ejector pulse can be influenced by the duration of the electrical pulse. The strength of the ejector pulse is influenced by the adjustable flow control.

Note
If the electrical or pneumatic supply fails while the valve is in the "generate vacuum" or "air saving" state, the valve moves to the "generate vacuum" position.

Operating mode of the air saving function (LS)

If the desired threshold value (1) (turn off suction) is reached for the vacuum, vacuum generation is automatically switched off.

Check valves prevent the reduction of the vacuum. However, leakages (e.g. due to rough workpiece surfaces) will slowly reduce the vacuum.

If the vacuum drops below the set threshold value (2) (turn on suction), vacuum generation is switched on automatically.

Vacuum is generated until the set threshold value (1) (turn off suction) is reached again.

Threshold value to turn off suction (air saving function) (1):

The vacuum generator is switched off simultaneously when the output Out A is set.

The preset value is -700 mbar.

Threshold value to turn on suction (2):

The threshold value (2) should always be above the switching point of duct B (3) "vacuum sensing".

The gap between (2) and (3) should be at least 50 mbar.

Note
Setting options and further instructions are described in the operating instructions and/or documentation VABF-S4-1-V2B1... on the Support Portal from Festo.
➔ Internet

Datasheet – Vacuum block for VTSA/VTSA-F

General technical data		
Valve function		5/3-way, pressurised
Design		Non-modular
Mounting position		Any
Nominal width of Laval nozzle (vacuum generation)	[mm]	2.0
Ejector characteristics		High vacuum, standard
Integrated functions		• Ejector pulse valve, electric • Flow control valve • On/off valve, electric • Air-saving circuit, electric • Non-return valve • Open silencer • Vacuum switch
Silencer design		Open
Measured variable		Relative pressure
Measuring principle		Piezoresistive
Switching function		Threshold value comparator
Short circuit current rating		Yes
Reverse polarity protection		For all electrical connections
Inductive protective circuit		Adapted to MZ, MY, ME coils
Switching element function		N/O
Threshold value setting range	[bar]	–0.999 ... 0 (recommended operating range: –0.95 ... –0.05)
	[MPa]	–0.0999 ... 0 (recommended operating range: –0.095 ... –0.005)
Hysteresis setting range	[bar]	–0.9 ... 0
	[MPa]	–0.09 ... 0
Power supply, vacuum block		Via own plug M12
Pneumatic supply for vacuum block		Via valve terminal VTSA/VTSA-F
Ejector pulse		Strength adjustable via flow control screw
Actuation type • Solenoid valve • Vacuum block		 Electrically actuated Vacuum generation via Venturi nozzle
Type of actuation for solenoid valve		Piloted
Flow direction		Not reversible
Exhaust function		Can be throttled (duct 3 and 5)
Type of mounting		Via through-hole, screwed onto manifold sub-base, width 26 mm
Manual override • For vacuum generation • For ejector pulse		Detenting, non-detenting, concealed Yes, solenoid coil 12 (holding) Yes, solenoid coil 14 (spring return), (only effective when power supply is switched off)
Signal status display, valve		LED
Pneumatic connections		
Supply	1, 3	Via the manifold sub-base of the valve terminal, width 26 mm
Exhausting	3/5	Via the modular silencer for vacuum block
Working port (vacuum port)	2	Via the manifold sub-base of the valve terminal (QS push-in fitting – vacuum), G1/4
Connection	4	Via the manifold sub-base of the valve terminal (sealed with blanking plug type B-1/4)

Datasheet – Vacuum block for VTSA/VTSA-F

Technical data for pressure switch of vacuum block (delivery status)		
Duct A: air saving function		
Switching behaviour		Threshold value comparator
Switching point	[mbar]	–700
	[MPa]	–0.07
Hysteresis	[mbar]	200
	[MPa]	0.02
Switching characteristic		NO (normally open contact)
Duct B: vacuum sensing		
Switching behaviour		Threshold value comparator
Switching point	[mbar]	–400
	[MPa]	–0.04
Hysteresis	[mbar]	5
	[MPa]	0.0005
Switching characteristic		NO (normally open contact)

Note

Setting options for duct A and duct B and further instructions can be found on the Support Portal from Festo in the operating instructions and/or documentation VABF-S4-1-V2B1...

Electrical data		
Electrical connection		4-pin plug to ISO 15407-2 (vacuum block supplied with power separately, not via valve terminal)
Nominal operating voltage	[V DC]	24
Operating voltage range	[V DC]	21.6 ... 26.4
Duty cycle	[%]	100
Max. output current	[mA]	50
Voltage drop	[V]	≤1.5
No-load supply current	[mA]	50 ... 150 (dependent on the switching status of the solenoid coils)
Characteristic coil data	[V DC]	24
Power consumption (Characteristic coil data)	[W]	1.3
Overload protection		Available
Accuracy (full scale)	[% FS]	±3
Degree of protection to EN 60529		IP65, NEMA 4 (for all types of signal transmission when mounted)

Electrical connection[1]						
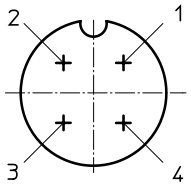		1xM12 plug, 4-pin to EN 61076-2-101		Pin1 – + 24 V DC (brown (BN)) Pin2 – Out B (white (WH)) Pin3 – 0 V DC (blue (BU)) Pin4 – Out A (black (BK))		Supply voltage Switching output B (duct B) 0 V DC Switching output A (duct A)

1) Max. permissible signal cable length: 5 m

Datasheet – Vacuum block for VTSA/VTSA-F

Operating and environmental conditions		
Operating medium		Compressed air to ISO 8573-1:2010 [7:4:4]
Notes on the operating medium		Unlubricated operation
Operating pressure	[bar]	4 ... 8
	[MPa]	0.4 ... 0.8
Nominal operating pressure	[bar]	6
	[MPa]	0.6
Pressure measuring range	[bar]	–1 ... 0
	[MPa]	–0.1 ... 0
Partial vacuum	[bar]	Up to approx. 0.9 (as a function of operating pressure)
	[MPa]	Up to approx. 0.09 (as a function of operating pressure)
Ambient temperature	[°C]	0 ... 50
Temperature of medium	[°C]	0 ... 50
Noise level LpA (at nominal operating pressure)	[dB(A)]	78

Materials	
Housing, jet nozzle	Wrought aluminium alloy
Screws	Galvanised steel
Seals	NBR
Plug housing	Nickel-plated die-cast zinc
Plug contacts	Gold-plated brass
Inspection window on pressure sensor	PA
Pressure sensor keypad	TPE-U
Note on materials	RoHS-compliant
PWIS conformity	VDMA24364 zone III

Pressure ratios, air consumption and volumetric flow rate

Vacuum as a function of operating pressure

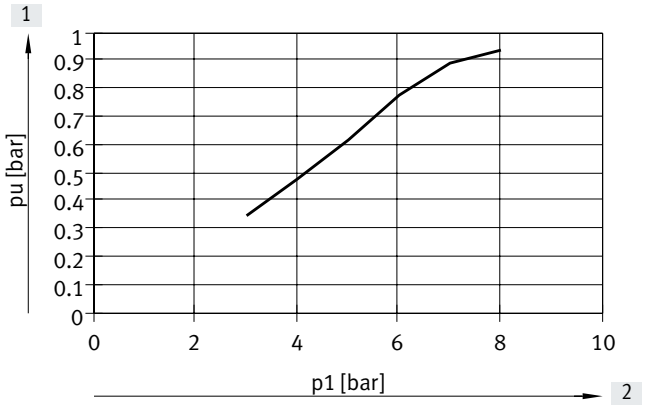

[1] Vacuum [2] Operating pressure

Air consumption as a function of operating pressure

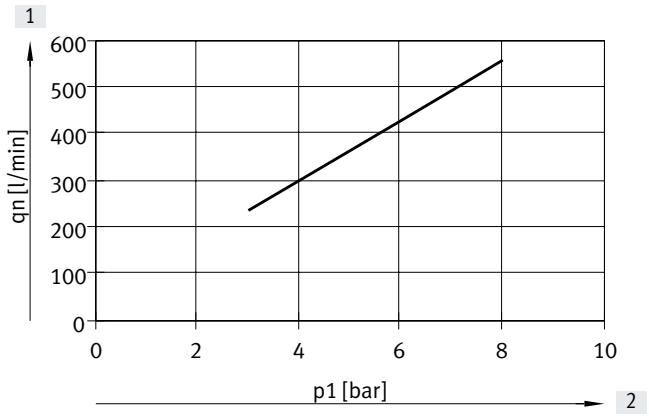

[1] Air consumption [2] Operating pressure

Datasheet – Vacuum block for VTSA/VTSA-F

Dimensions Download CAD data ➔ www.festo.com

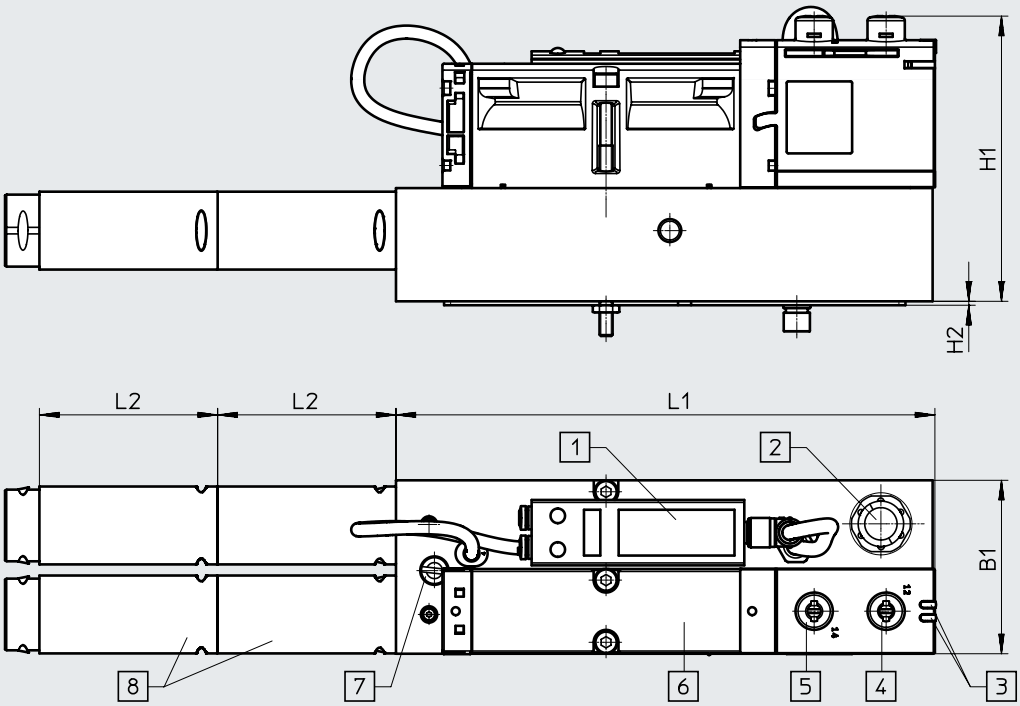

[1] Pressure sensor with LCD display and operating buttons
[2] Plug for electrical connection and vacuum sensing (M12, 4-pin)
[3] LED signal status indication, solenoid valve
[4] Manual override for vacuum generation
[5] Manual override for ejector pulse (only effective when the power supply is switched off)
[6] Solenoid valve
[7] Flow control screw for adjusting the strength of the ejector pulse
[8] Modular silencer

Type	B1	H1	H2	L1	L2
VABF-S4-1-V2B1-C-VH-20	53	87.1	1.2	164.7	54.2

Datasheet – Vacuum block for VTSA/VTSA-F

Ordering data

	Code	Description		Part no.	Type
Vacuum block					
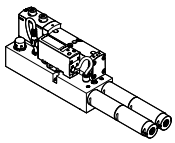	VB	Vacuum block for valve terminal VTSA/VTSA-F with air-saving function and adjustable ejector pulse	1120 g	**571425**	**VABF-S4-1-V2B1-C-VH-20**
Manifold sub-base					
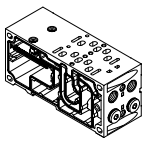	L[2]	For vacuum block 2 valve positions, 4 addresses, with 2 blanking plugs in port 4	26 mm	– [1]	**VABV-S4-...**
	LK[2]	For vacuum block 2 valve positions, 4 addresses, with 2 blanking plugs in port 4, with small QS fitting	26 mm	– [1]	**VABV-S4-...**
Connecting cable					
	–	• Straight socket, 1xM12, 5-pin • Open end, 4-core	2.5 m	**550326**	**NEBU-M12G5-K-2.5-LE4**
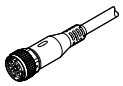	–	• Straight socket, 1xM12, 5-pin • Open end, 4-core	5 m	**541328**	**NEBU-M12G5-K-5-LE4**
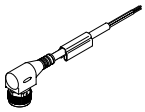	GC	• Angled socket, 1xM12, 5-pin • Open end, 4-core	**5 m**	**541329**	**NEBU-M12W5-K-5-LE4**
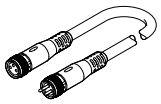	–	Modular system for a choice of connecting cables		**–**	**NEBU-...** ➔ Internet: nebu
Pneumatic connection accessories					
A selection of possible fittings, blanking plugs, silencers and other pneumatic accessories can be found in the chapter **Accessories** ➔ page: 260 or on the website via the individual search terms: **Internet** ➔ connection technology, silencer, blanking plug					

1) The manifold sub-base for use with the vacuum block can only be ordered via the valve terminal configurator and therefore doesn't have a separate part number.
2) Code letter within the order code for a valve terminal configuration

Datasheet – Vacuum generator for VTSA-F-CB

Vacuum generator width
35 mm

Voltage
24 V DC

Operating pressure
4 ... 8 bar
0.4 ... 0.8 MPa

Description

The vacuum generator VABF is designed for generating a vacuum.
The vacuum generator can be integrated into the existing valve terminal VTSA-F-CB.
Compressed air as well as power are supplied via the valve terminal.

A solenoid valve (solenoid coil 12, vacuum generation) controls the compressed air supply. Vacuum is generated using the Venturi principle when the vacuum generator is pressurised with compressed air.
The vacuum generator is used in conjunction with a suction gripper to pick up, hold and place components.

Picking up and holding is carried out by a suction gripper using a vacuum. Once the component has been positioned, it is released by an ejector pulse. The ejector pulse can be set.

The ejector pulse is generated using the solenoid valve (solenoid coil 14, ejector pulse). The vacuum collapses if the vacuum system is briefly pressurised.
The power ejector pulse variant (-AP) of the vacuum generator is a more energy- and air-saving option.

Extended functions with VTSA-F-CB

The VTSA-F-CB with serial communication provides the vacuum generator with extended functions:
- Opening and saving of up to four records (on a local computer)
- Teach-in functionality: recording homing runs, from gripping and holding the workpiece to setting it down. Configuration of switching points and monitoring.
- Preventive maintenance: measurement of all vacuum times, comparison with the homing run, warning message if a definable level of deviation is reached
- Switching air-saving function on/off
- Changing the vacuum parameters per record
- Locking the ejector pulse:
  – When the Uval of the adjacent voltage zone is switched off (voltage zone with safe shut-off within the valve terminal)
  – When there is a fault with the valve load voltage (e.g. undervoltage)
- Extended diagnostic functions via CBUS and display of status LED (yellow) or error LED (red)

Note

In the event of an "emergency off" of the valve terminal (shutdown U_{VAL}), the vacuum generator VABF remains in vacuum generation mode with air-saving function.
If there is a complete power failure (bus shutdown, U_{SEN}) when the vacuum generator is in "Generate vacuum" mode, the valve switches to the "Permanent suction" position.

Vacuum generation

The vacuum is generated according to the Venturi principle using the vacuum generator cartridges VN.

For the large sizes 20 and 30, two vacuum generator cartridges are used and connected in parallel.

For size 14, one vacuum generator cartridge is used (the second port is sealed with a blanking plug).

Vacuum generation is activated when the output signal "vacuum generation" is applied for at least 50 ms. Since the vacuum generation is pulse-controlled, vacuum is also generated after the output signal is deactivated.

Datasheet – Vacuum generator for VTSA-F-CB

Function overview

Monitoring process parameters

- Pressure value at vacuum port
- Limit values
- Evacuation time t_E
- Pressurisation time t_B
- Process quality

Fault detection and diagnostic messages

- Supply voltage not reached
- Evacuation time exceeded
- Fault on air-saving function
- Vacuum value not reached
- Evacuation or pressurisation time exceeded
- Process quality below limit value
- Teach-in error

Static teach-in

Switching points and cycle time can be configured using the FMT (Festo Maintenance Tool).

Dynamic teach-in

Calculating and optimising existing process sequences.
Switching points and monitoring functions can be configured during operation.

Air saving function

- Is set at the factory.
- Can be switched off for “air-permeable workpieces” (otherwise there will be an unnecessarily high number of switching processes).

Manual override

Both solenoid coils, for vacuum generation and ejector pulse, can be switched manually using the manual override.

Pressure value (vacuum)

Pressure values are measured continuously between the vacuum port and filter. If the operating voltage of the vacuum generator is switched off, the values are reset.

Cycle time

The time from the start of the evacuation through ejection to the start of the new evacuation.

Evacuation and pressurisation time

The evacuation time t_E is measured from the start of the evacuation until the switching point is reached.
The pressurisation time t_B is measured from the start of the pressurisation to the time at which the pressure value (vacuum) falls below –5 kPa.

Blanking plug

A vacuum generator V*20 or V*30 can be converted at a later date to V*14 using a blanking plug OASC-V1-P.
This makes it possible to reduce the air consumption or reduce the suction rate (e.g. for evacuation of smaller volumes).

Emergency stop function

If the emergency stop (switching off the load voltage supply) is triggered during vacuum generation, the vacuum generator remains in vacuum generation mode.

If the air saving function was activated, it remains active. If the parameter "ejector pulse interlock" is activated (set to inactive at the factory), no ejector pulse is triggered in the event of an emergency stop.

If there is a complete power failure (electronic supply voltage) during vacuum generation, the valve switches to "generate vacuum" position.

When the power supply is switched on again, the valve remains in the "generate vacuum" operating status until an ejection signal is received.

Error state

If communication between the controller and the vacuum generator is interrupted, a specific status is set.

The following settings are defined in this state:

- Output bit "vacuum generation" is set to 0.
- Output bit "ejector pulse" is set to 0.
- Parameter set is set to 0
- Air saving function is not affected

Additional characteristics

- Galvanic isolation between the vacuum generator VABF and valve terminal VTSA-F-CB
- 3 performance settings for vacuum generation (14, 20, 30)
- Integrated solenoid valve for vacuum generation (solenoid coil 12) and ejector pulse (solenoid coil 14)
- Air-saving ejector pulse with increased ejecting rate (power ejector pulse)
- Flow control screw to adjust the ejector impulse
- Integrated pressure sensor
- Integrated air saving function
- Integrated strainer for filtering process air in order to protect the vacuum generator [-AP]
- Switching of the solenoid valve for vacuum generation with mechanical manual override
- Open silencer for reduced noise levels
- A check valve prevents purging of the vacuum if vacuum generation is interrupted

Datasheet – Vacuum generator for VTSA-F-CB

General technical data			
Type		Functions with type code VABF...-A	Functions with type code VABF...-AP
Valve function		5/3-way, pressurised	
Design		Non-modular	
Mounting position		Any	
Nominal width of Laval nozzle (vacuum generation)	14 [mm]	1.4	
	20 [mm]	2.0	
	30 [mm]	3.0	
Ejector characteristics • VABF...V2B1...VH... • VABF...V2B1...VL...		 High vacuum, standard High suction rate, standard	
Integrated functions		• Ejector pulse, electrical • Flow control valve • On/off valve, electric • Air-saving circuit, electric • Non-return valve • Open silencer • Vacuum switch	• Power ejector pulse, electrical • Flow control valve • On/off valve, electric • Air-saving circuit, electric • Non-return valve • Open silencer • Vacuum switch
Silencer design		Open	
Measured variable		Relative pressure	
Measuring principle		Piezoresistive	
Switching function		Window comparator	
		Threshold value comparator	
Reverse polarity protection		For all electrical connections	
Switching element function		N/O	
Pneumatic supply for vacuum generator		Via valve terminal VTSA-F-CB	
Ejector pulse		Strength adjustable via flow control screw	
Solenoid valve actuation type		Electrically actuated	
Type of actuation for solenoid valve		Piloted	
Flow direction		Not reversible	
Type of mounting		Via through-hole, screwed onto manifold sub-base, width 35 mm	
Manual override • For vacuum generation • For ejector pulse		Non-detenting (only non-detenting: with accessories), detenting, covered (with accessories) Yes, solenoid coil 12 (holding) Yes, solenoid coil 14 (spring return), (only effective when power supply is switched off)	
Pneumatic connections			
Supply	1	Compressed air is supplied via the valve terminal	
Exhausting	3	Via silencer (open)	
Working port (vacuum port)	2	G3/8	

Electrical data and sensors		
Operating voltage range (UB)	[V DC]	21.6 ... 30
Nominal operating voltage	[V DC]	24
Duty cycle	[%]	100
No-load supply current	[mA]	30
Electrical actuation		Fieldbus
Electrical connection		Via CPX
Pressure measuring range	[bar]	−1 ... 0
	[MPa]	−0.1 ... 0
Accuracy (full scale)	[% FS]	±3
Reproducibility, switching value FS	[%]	1
Degree of protection to EN 60529		IP65
Protection class to DIN EN 61140		III

Datasheet – Vacuum generator for VTSA-F-CB

Display and operation		
Display type		LED display, 2-digit
Threshold value setting range	[kPa]	0 ... 99
Hysteresis setting range	[kPa]	0 ... 90
Setting options		Teach-in
		Via parameter sets
Switching status display sensor		LED
Display range start value	[kPa]	0
Display range end value	[kPa]	99
Displayable unit(s)	[kPa]	Vacuum
Signal status indication, solenoid valve		LED

Operating and environmental conditions											
Type VABF...		VH-14-A	VH-14-AP	VH-20-A	VH-20-AP	VH-30-A	VH-30-AP	VL-14-A	VL-14-AP	VL-20-A	VL-20-AP
Operating medium		Compressed air to ISO 8573-1:2010 [7:4:4]									
Note on operating/pilot medium		Lubricated operation not possible									
Pilot pressure pS	[bar]	4 ... 10									
	[MPa]	0.4 ... 1									
Operating pressure pB	[bar]	4 ... 8									
	[MPa]	0.4 ... 0.8									
Nominal operating pressure pBnom	[bar]	6									
	[MPa]	0.6									
Operating pressure for max. suction rate	[bar]	4		4		6		4		5	
	[MPa]	0.4		0.4		0.6		0.4		0.5	
Operating pressure for max. vacuum pumax	[bar]	4		4		6		–		–	
	[MPa]	0.4		0.4		0.6		–		–	
Max. vacuum pVmax	[kPa]	92						–		–	
Max. suction rate with respect to atmosphere	[l/min]	51		99		167		91		179	
Pressurisation time at nominal operating pressure	[s]	0.2	0.3	0.2	0.3	0.2	0.25	0.2	0.25	0.2	0.25
Noise level LpA (at nominal operating pressure)	[dB(A)]	70		73		75		62		61	
Ambient temperature tamb	[°C]	–5 ... +50									
Temperature of medium tmed	[°C]	–5 ... +50									
CE marking (see declaration of conformity)		To EU EMC Directive									
Certification		RCM									
Corrosion resistance class CRC[1)]		0									

1) Corrosion resistance class CRC 0 to Festo standard FN 940070
No corrosion stress. Applies to small, visually unimportant standards-based parts such as threaded pins, circlips and clamping sleeves which are usually only available on the market in a phosphated or burnished version (and possibly oiled) as well as to ball bearings (for components < CRC 3) and plain bearings.

Materials	
Housing, jet nozzle, blanking plug	Wrought aluminium alloy
Adjusting screw	High-alloy stainless steel
Screws	Steel
Vacuum generator seals	NBR, HNBR
Blanking plug seals	NBR
Plate	Die-cast aluminium
Collector nozzle	POM
Silencers	PU foam, POM
Note on materials	RoHS-compliant (vacuum generator and blanking plug)
Corrosion resistance class CRC[1)]	2 (blanking plug)

1) Corrosion resistance class CRC 2 to Festo standard FN 940070
Moderate corrosion stress. Indoor applications in which condensation can occur. External visible parts with primarily decorative surface requirements that are in direct contact with a normal industrial environment.

Datasheet – Vacuum generator for VTSA-F-CB

Connection and display components

Vacuum generator VABF-S4-... - CB-VH/VL-...

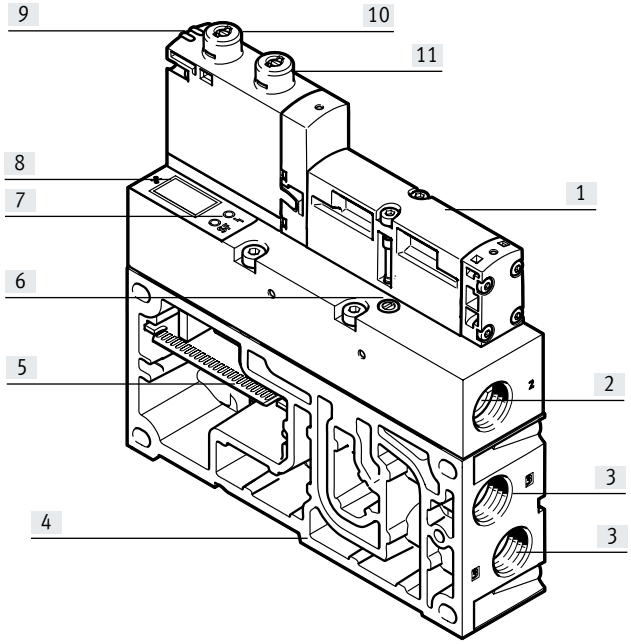

[1] Solenoid valve VSVA
[2] Vacuum port G3/8
[3] Port for silencer UOM-3/8 [VH/L-14 (1x) and VH-20 (2x)]
[4] Manifold sub-base for valve terminal VTSA-F-CB (pneumatic and electric)
[5] Electrical link to valve terminal VTSA-F-CB
[6] Flow control screw for adjusting the strength of the ejector pulse
[7] The status LED (yellow) indicates the operating status of the vacuum generator and displays warnings in the event of a process fault
[7] The error LED (red) indicates the status of the CBUS connection and displays errors
[8] The 7-segment display (2-digit blue LED display) shows the pressure value (vacuum) in kPa
[9] LED switching status indication for solenoid valve
[10] Manual override for vacuum generation
[11] Manual override for ejector pulse

Diagnostics and monitoring

The vacuum generator has monitoring functions that enable malfunctions or faults to be detected at an early stage during operation.

The following diagnostic functions are possible:

- Monitoring tE (evacuation time), reference via teach-in
- Monitoring tB (pressurisation time), reference via teach-in
- Monitoring air consumption via vacuum drop rate VDR (process quality) when air saving function is active (tLS)

Definition of diagnostic levels

Status	Normal operation	Warning	Faults
Definition	Device is OK	Outside the specification	Malfunction

Operating statuses of the vacuum generator

Actuation			
Solenoid coil 12	Solenoid coil 14	Function/operating status	Comment
0	0	Normal position	No actuation or status after the end of the "ejection" signal/the "pressurisation" function
		Generating vacuum	Operating status after failure of the pilot air supply or the electrical supply of the vacuum generator (self-latching loop)
1	0	Generating vacuum	Pulse actuation with self-latching loop
0	1	Pressurising (ejector pulse)	Accelerated vacuum reduction
1	1	Saving air (air saving function)	Maintain vacuum (valve mid-position)

Datasheet – Vacuum generator for VTSA-F-CB

Electrical and pneumatic status changes		
Status change	Operating status before status change	Operating status after status change
Failure/deactivation of the electronics supply or the pilot air supply of the vacuum generator	Generating vacuum	Generating vacuum (The valve spool remains in the "generate vacuum" position)
	Saving air	Generating vacuum (The mechanical spring pushes the valve spool into the "generate vacuum" position)
	Pressurising	Normal position[1)]
	Normal position[1)]	Normal position[1)]
Emergency stop/switch-off of the load voltage supply	Generating vacuum	Generating vacuum
	Saving air	Generating vacuum (vacuum is maintained)
	Pressurising	Normal position or function is interrupted[2)]
	Normal position[1)]	Normal position[1)]

1) Normal position means the vacuum block is not in the "generate vacuum", "air saving" or "ejection" operating status
2) Parameter "ejector pulse interlock" must be active

Note

If the compressed air or power supply to the valve terminal fails, this will result in the following statuses:

1. Compressed air failure:
- No vacuum can be generated, even if the valve is in the "generate vacuum" position.
- No ejector pulse can be generated, even if the valve is in the "ejection" position.

2. Power supply failure to the valve terminal:
- If both solenoid coils are de-energised at the same time, the valve switches to permanent suction because of the pilot air volume still present and remains in this state.

Circuit symbols, vacuum generator

VABF..V2B1...A

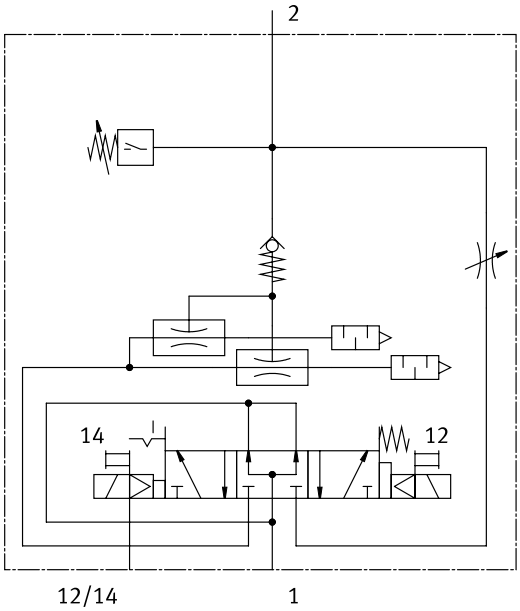

VABF..V2B1...AP

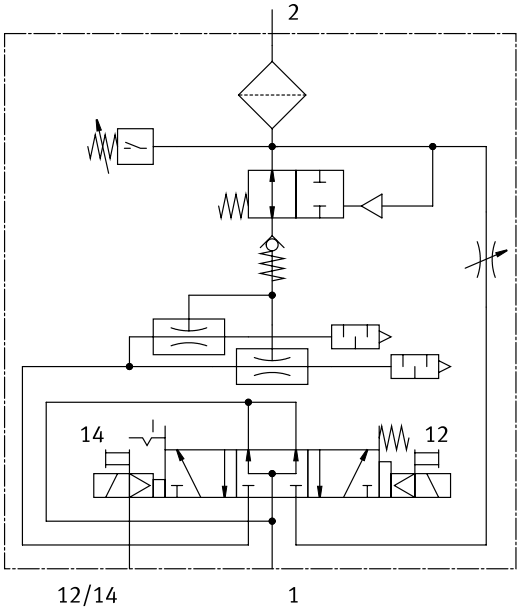

The vacuum generator is supplied internally via duct 1 of the manifold sub-base of the valve terminal.
The pilot air is supplied internally via duct 12/14 of the manifold sub-base of the valve terminal.

Datasheet – Vacuum generator for VTSA-F-CB

Pressure ratios, negative pressure p_u as a function of operating pressure p_1

VH-1 4/20/30

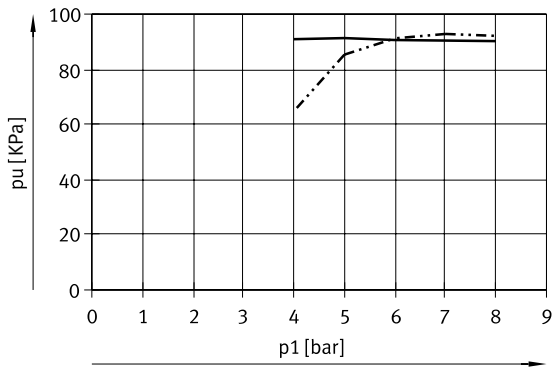

VH-14/20
VH-30

VL-1 4/20

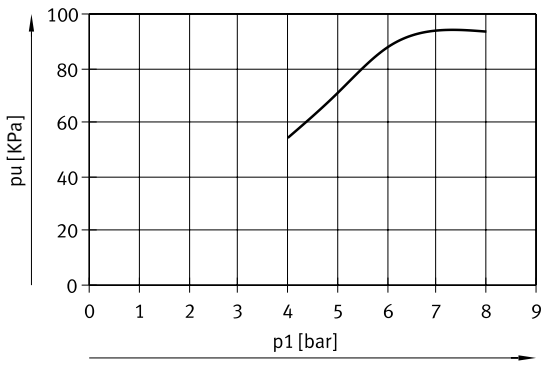

VL-14/20

Pressure ratios, evacuation time t_{evac} as a function of negative pressure p_u and operating pressure 4 bar for 1 l volume

VH-1 4/20/30: $t_{evac(p1)}$

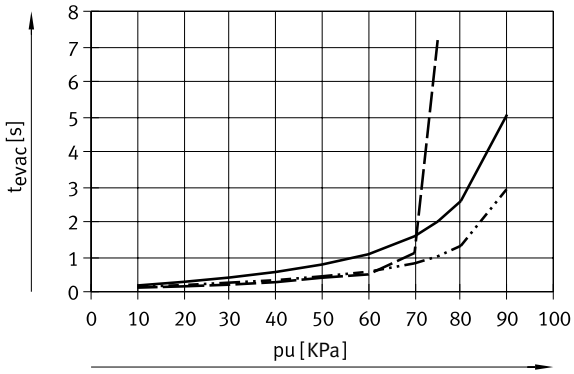

VH-14
VH-20
VH-30

VL-1 4/20: $t_{evac(p1)}$

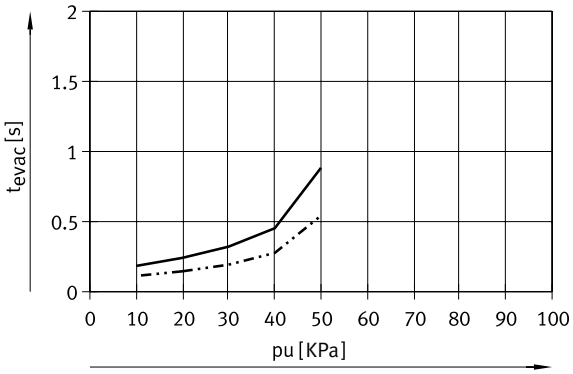

VL-14
VL-20

Pressure ratios, air consumption q_n as a function of operating pressure p_1

V...-14/20/30

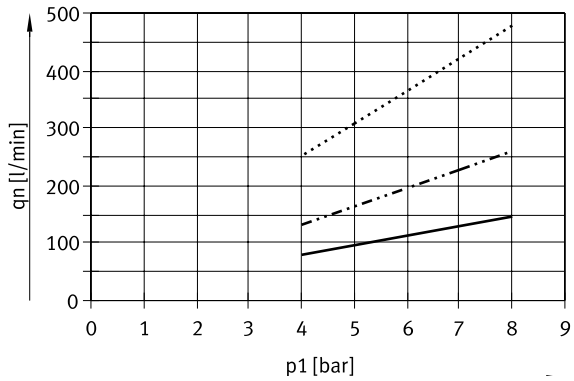

VH/L-14
VH/L-20
VH-30

Datasheet – Vacuum generator for VTSA-F-CB

Pressure ratios, suction rate q_{ns} as a function of negative pressure p_u, p_1 and operating pressure 6 bar

VH-1 4/20/30

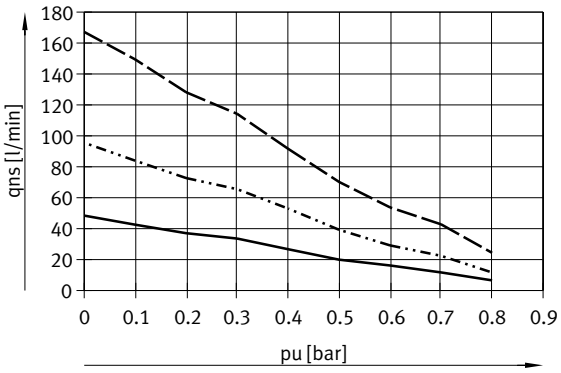

VH-14
VH-20
VH-30

VL-1 4/20

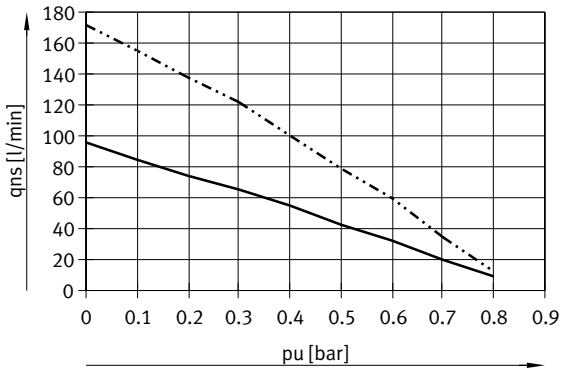

VL-14
VL-20

Datasheet – Vacuum generator for VTSA-F-CB

Dimensions Download CAD data ➔ www.festo.com

Vacuum generator Laval nozzle 2.0 with high negative pressure

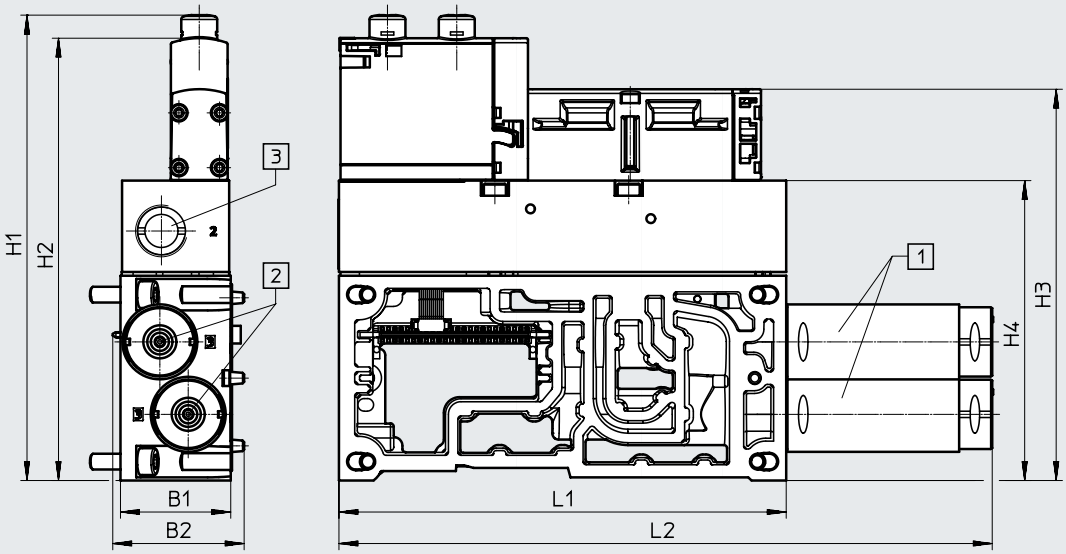

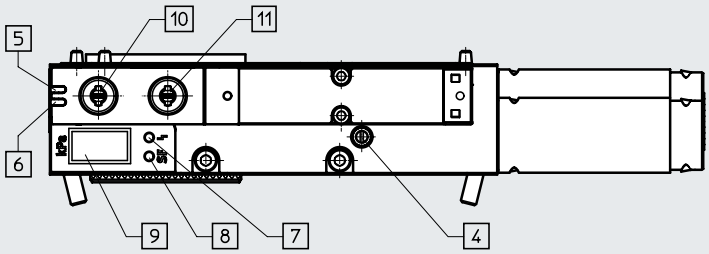

[1] Silencer UOM-3/8
[2] Exhaust port G3/8
[3] Vacuum port G3/8
[4] Flow control screw for adjusting the strength of the ejector pulse
[5] LED switching status indication for solenoid valve ejector pulse
[6] LED switching status indication for solenoid valve vacuum generation
[7] Fault LED (red)
[8] Status LED (yellow)
[9] 2-digit 7-segment display (blue LEDs) for vacuum
[10] Manual override for vacuum generation, non-detenting/detenting
[11] Manual override for ejector pulse, non-detenting/detenting

Type	B1	B2	H1	H2	H3	H4	L1	L2
VABF-S4-2-V2B1-G38-CB-VH-20-A...	35	41.7	147.7	140.4	124.2	95.2	142	207.4

Note

Silencer UOM-3/8, seal VABD-S6-1-C and screws for manifold sub-base are included with the order for the vacuum generator.

If required, the silencer extension UOMS-3/8 can be ordered separately.

Datasheet – Vacuum generator for VTSA-F-CB

Dimensions Download CAD data ➔ www.festo.com

Vacuum generator Laval nozzle 3.0 and Laval nozzle 2.0 with high suction rate

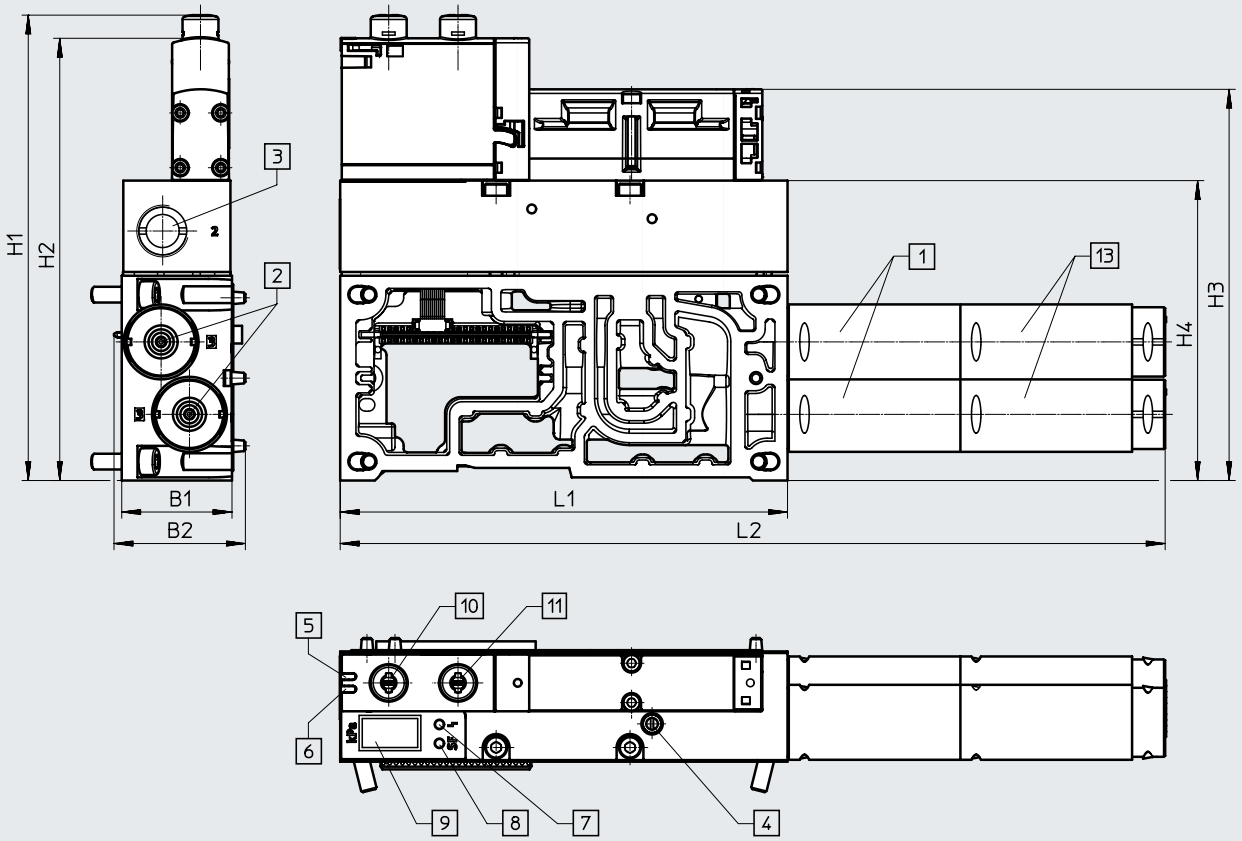

[1] Silencer UOM-3/8
[2] Exhaust port G3/8
[3] Vacuum port G3/8
[4] Flow control screw for adjusting the strength of the ejector pulse
[5] LED switching status indication for solenoid valve ejector pulse
[6] LED switching status indication for solenoid valve vacuum generation
[7] Fault LED (red)
[8] Status LED (yellow)
[9] 2-digit 7-segment display (blue LEDs) for vacuum
[10] Manual override for vacuum generation, non-detenting/detenting
[11] Manual override for ejector pulse, non-detenting/detenting
[13] Silencer extension UOMS-3/8

Type	B1	B2	H1	H2	H3	H4	L1	L2
VABF-S4-2-V2B1-G38-CB-VL-20-A...	35	41.7	147.7	140.4	124.2	95.2	142	261.9
VABF-S4-2-V2B1-G38-CB-VH-30-A...								

Note

Silencer UOM-3/8, seal VABD-S6-1-C and screws for manifold sub-base are included with the order for the vacuum generator.
If required, the silencer extension UOMS-3/8 can be ordered separately.

Datasheet – Vacuum generator for VTSA-F-CB

Dimensions Download CAD data ➔ www.festo.com

Vacuum generator Laval nozzle 1.4

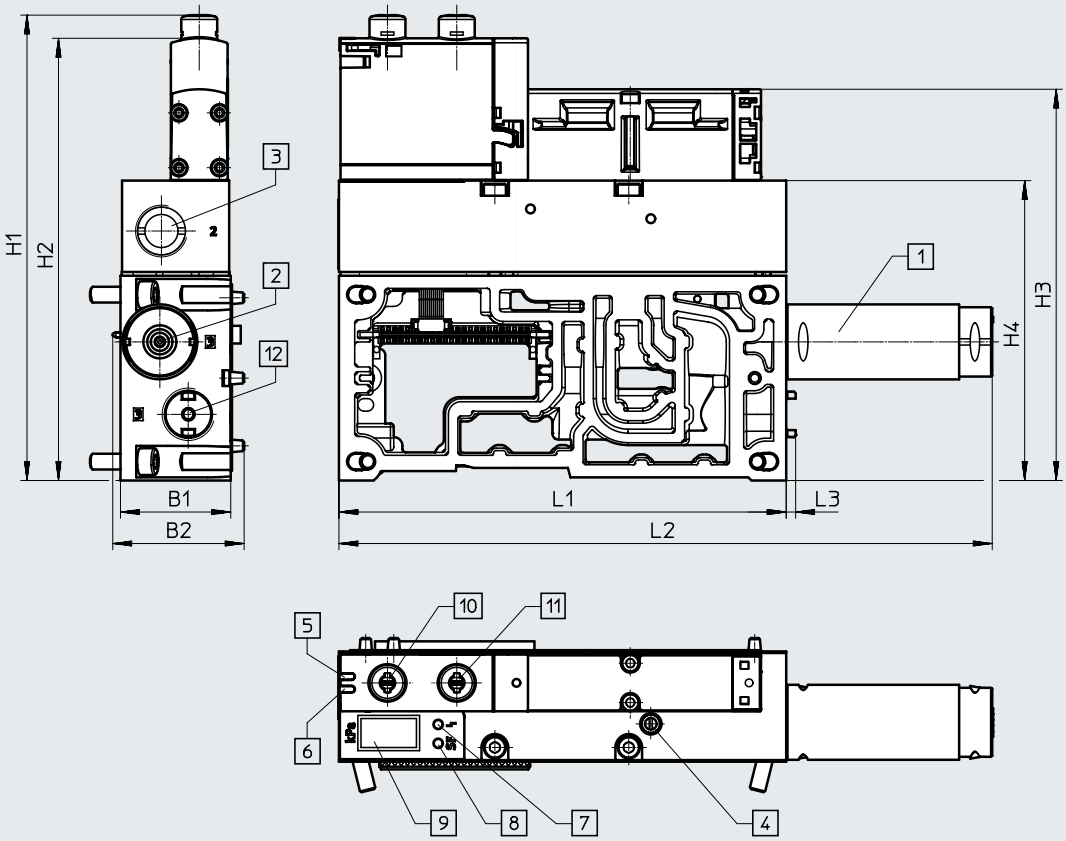

[1] Silencer UOM-3/8
[2] Exhaust port G3/8
[3] Vacuum port G3/8
[4] Flow control screw for adjusting the strength of the ejector pulse
[5] LED switching status indication for solenoid valve ejector pulse
[6] LED switching status indication for solenoid valve vacuum generation
[7] Fault LED (red)
[8] Status LED (yellow)
[9] 2-digit 7-segment display (blue LEDs) for vacuum
[10] Manual override for vacuum generation, non-detenting/detenting
[11] Manual override for ejector pulse, non-detenting/detenting
[12] Screw-in blanking plug (max. tightening torque 4 Nm)

Type	B1	B2	H1	H2	H3	H4	L1	L2	L3
VABF-S4-2-V2B1-G38-CB-VL-14-A...	35	41.7	147.7	140.4	124.2	95.2	142	207.4	3
VABF-S4-2-V2B1-G38-CB-VH-14-A...									

Note
Silencer UOM-3/8, seal VABD-S6-1-C and screws for manifold sub-base are included with the order for the vacuum generator.
If required, the silencer extension UOMS-3/8 can be ordered separately.

Datasheet – Vacuum generator for VTSA-F-CB

Ordering data

	Terminal code	Description		Part no.	Type
Vacuum generator for VTSA-F-CB, with integrated sensor					
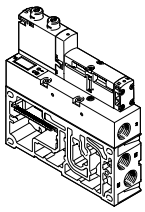	With high suction rate				
	II	Laval nozzle, 1.4 mm	915 g	**8088779**	**VABF-S4-2-V2B1-G38-CB-VL-14-A**
	IIPH	Laval nozzle, 1.4 mm with power ejector pulse	930 g	**8088781**	**VABF-S4-2-V2B1-G38-CB-VL-14-AP**
	IV	Laval nozzle, 2.0 mm	955 g	**8067141**	**VABF-S4-2-V2B1-G38-CB-VL-20-A**
	IVPH	Laval nozzle, 2.0 mm with power ejector pulse	970 g	**8067144**	**VABF-S4-2-V2B1-G38-CB-VL-20-AP**
	With high vacuum				
	I	Laval nozzle, 1.4 mm	915 g	**8088778**	**VABF-S4-2-V2B1-G38-CB-VH-14-A**
	IPH	Laval nozzle, 1.4 mm with power ejector pulse	930 g	**8088780**	**VABF-S4-2-V2B1-G38-CB-VH-14-AP**
	III	Laval nozzle, 2.0 mm	920 g	**8067140**	**VABF-S4-2-V2B1-G38-CB-VH-20-A**
	IIIPH	Laval nozzle, 2.0 mm with power ejector pulse	940 g	**8067143**	**VABF-S4-2-V2B1-G38-CB-VH-20-AP**
	V	Laval nozzle, 3.0 mm	955 g	**8067142**	**VABF-S4-2-V2B1-G38-CB-VH-30-A**
	VPH	Laval nozzle, 3.0 mm with power ejector pulse	970 g	**8067145**	**VABF-S4-2-V2B1-G38-CB-VH-30-AP**
Silencer extension					
	–	Can be attached to enclosed silencer UOM and secured in place.	17.5 g	**538437**	**UOMS-3/8**
Blanking plug					
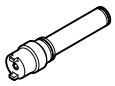	–	With connecting thread G3/8 (The blanking plug can be used to subsequently convert an existing vacuum generator V...20 to a vacuum generator V...14, or a vacuum generator V...30 to a vacuum generator V...20.)	23 g	**8068144**	**OASC-V1-P**
Pneumatic connection accessories					
A selection of possible fittings, blanking plugs, silencers and other pneumatic accessories can be found in the chapter **Accessories** → page: 260 or on the website via the individual search terms: **Internet** → connection technology, silencer, blanking plug					

Adaptation to width 65 mm

- Valve width 65 mm
  ISO size 3
- Voltage
  24 V DC
- Flow rate
  up to 4000 l/min
- Temperature range
  –5 ... +50°C
- Operating pressure
  –0.9 ... 10 bar
  –0.09 ... 1 MPa

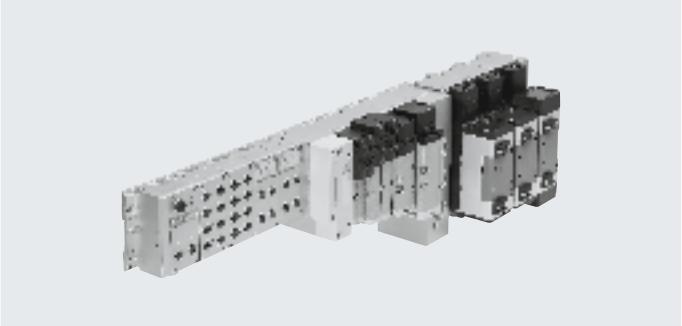

Description

Function

By adapting valves, regulator plates and throttle plates for width 65 mm, ISO size 3, the scope of application of the valve terminal VTSA/VTSA-F can be further expanded:

- 5 valve sizes with pneumatic function integration on a valve terminal VTSA/VTSA-F.
- Max. flow rate up to 4000 l/min
- Max. 26 solenoid coils of width 65 mm, ISO size 3 can be adapted to the valve terminal VTSA/VTSA-F. The total number of solenoid coils of all widths must not exceed 32.

Constraints

End plate with pilot air selector

If components of ISO size 3 are used, the end plate with pilot air selector is not available for selection.

Pilot air supply via adapter plate

If no pneumatic components are installed on the left side of the adapter plate (electric components only), ducts 12 and 14 of the adapter plate must be sealed with blanking plugs.

Pressure zones

Max. 2 pressure zones are possible with ISO size 3.

Key features – Adaptation to width 65 mm

Equipment options

Valve functions for width 65 mm, ISO size 3

- 5/2-way valve
  - Single solenoid, pneumatic spring/mechanical spring
  - Double solenoid
  - Double solenoid with dominant signal
- 5/3-way valve
  - Mid-position pressurised
  - Mid-position closed
  - Mid-position exhausted

Special features

Fieldbus interface/CPX terminal

- Max. 32 valve positions/max. 32 solenoid coils
- Any compressed air supply
- Any number of pressure zones

Multi-pin plug connection

- Max. 32 valve positions/max. 32 solenoid coils
- Parallel, modular valve linking
- Any compressed air supply
- Any number of pressure zones

AS-Interface

- 1 to 8 valve positions/max. 8 solenoid coils. Auxiliary power supply is required.

Combinable

- Width 65 mm: valve flow rate up to 4000 l/min
- Widths 18 mm, 26 mm, 42 mm and 52 mm can be combined on a single valve terminal. Width 65 mm is mounted at the end of the VTSA/VTSA-F configuration using adapter VABA ...

Note

The total number of solenoid coils of all widths must not exceed 32.

Valve terminal configurator

➔ Internet: www.festo.com

A valve terminal configurator is available to help you select a suitable VTSA/VTSA-F valve terminal, making it much easier to order the right product.

The valve terminals are assembled according to your order specification and are individually checked. This reduces assembly and installation time to a minimum.

Order a valve terminal VTSA using the order code:

Ordering system for VTSA
➔ Internet: vtsa

Ordering system for CPX
➔ Internet: cpx

Order a valve terminal VTSA-F using the order code:

Ordering system for VTSA-F
➔ Internet: vtsa-f

Ordering system for CPX
➔ Internet: cpx

Note

Please note that despite the basic configuration for ISO size 3 valves

- the manual override is always non-detenting.
- exhaust air 3/5 of the adapter plate for ISO size 3 is always routed separately.
- there is no option for a 90° connection plate, outlet underneath.
- there is no option for sintered silencers.
- there is no option for pneumatic accessories.

Peripherals – Pneumatic components, width 65 mm

Overview of modules for width 65 mm, ISO size 3

ISO 5599-2 size 3

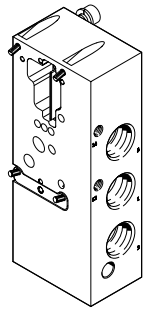

Adapter plate

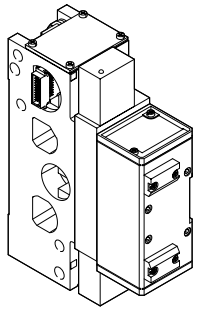

Valve with manifold sub-base

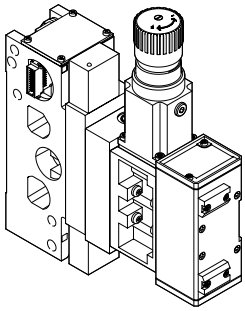

Vertical stacking

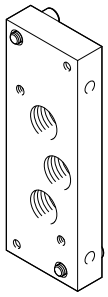

End plate

Pneumatics

Pneumatic modules

- Manifold sub-base for ISO valves
- Size 3: (G1/2) 4000 l/min

Adapter plate
- Compressed air supply port, duct 1
- Exhaust connection duct 3/5 (separated)
- External pilot air supply connection (optional) for pneumatic components on the left side

Pneumatic modules
- Manifold sub-base for an ISO valve
- Pilot control via intermediate solenoid plate
- ISO size 3

Vertical stacking

- Valves
- Throttle plates
- Intermediate pressure regulator plates
- Pressure gauge
- Creating pressure zones with 10 bar or vacuum (with external pilot air supply only)

Information on valve activation for ISO size 3
- All intermediate solenoid plates have a non-detenting manual override
- Valve terminals with internal pilot air supply: restricted pressure range
- Valve terminals with external pilot air supply: pressure zones up to 10 bar or vacuum operation possible. In this case, the pilot air supply must be regulated and supplied externally.

Additional modules

- Throttle plates: one-way flow control valves can be mounted between the manifold block and the valve so that the speed of travel can be set separately for single and double-acting cylinders
- Pressure regulators: intermediate pressure regulator plates for setting the contact pressure of a cylinder, either separately on duct 1, 2 or 4, or shared by 2 and 4.
- Pressure gauge on pressure regulator

Flexible compressed air supply
- Compressed air supply via the adapter plate or the right end plate
- With large valve terminals, compressed air can be supplied at both sides
- Creating pressure zones: maximum of 2 pressure zones, up to 10 bar as well as for vacuum, are possible for all valve sizes. Compressed air supply at both sides is essential in this case
- Regulated external pilot air supply should be used for pressures ‹ 3 bar.

Options
- Vacant positions for subsequent extensions
- All pneumatic connections can also be supplied with an NPT thread

Peripherals – Pneumatic components, width 65 mm

Pneumatic components of width 65 mm, ISO size 3

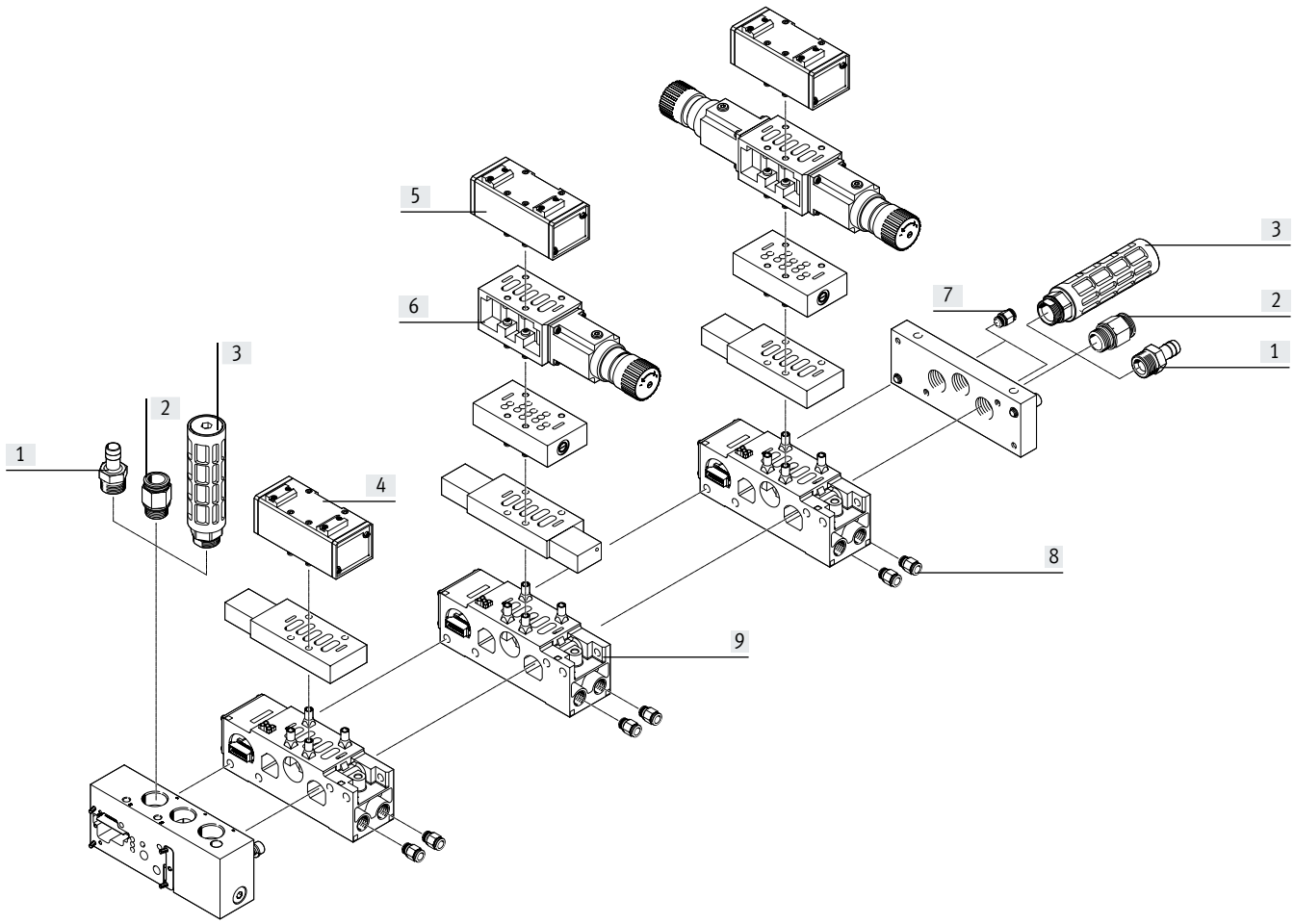

		Description	➔ Page/Internet
	Barbed hose fitting 1"	–	260
	Fitting	For compressed air supply	260
	Silencers	For exhaust air	261
	Valve	Pneumatically actuated standards-based valve	244
	Throttle plate	For exhaust air flow control	245
	Intermediate pressure regulator plate	–	245
	Fitting	For pilot air	260
	Fitting	For supply air (QS 16, QS 12)	260
	Manifold sub-base	For linking the valve terminal	245

Key features – Pneumatic components, width 65 mm

Key features – Pneumatic components			
Adapter plate VABA ...			
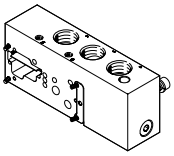	The adapter plate VABA-... is used for adapting valves of width 65 mm ISO size 3 to valve terminal VTSA/VTSA-F. Ports for supply/exhaust air and pilot air supply are available.	The external pilot air used here supplies the valve terminal with valve widths 18 ... 52 mm, to the left of the adapter.	The external pilot air supply for the valves with a width of 65 mm, ISO size 3, is provided via the end plate IEPR ....
Cover plates			
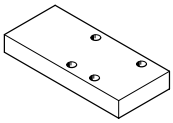	Cover plates are used to seal off vacant valve positions.	No intermediate solenoid plate is mounted underneath the cover plate.	This depends on the valve used and must be ordered with the valve if the terminal is expanded at a later date.
Valves and pilot control			
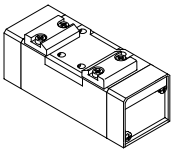	The valves used are pneumatically actuated standards-based valves that are controlled via an intermediate solenoid plate.		
Valves and flow lines			
The pilot air supply is selected at the intermediate solenoid plate by configuring two plungers.	Air can be taken from the supply air, or from a separate air supply.	A separate pilot air supply is required in principle if the supply pressure is less than 3 bar (including vacuum).	In this case, it is advisable to restrict the pilot air supply to max. 10 bar with a suitable regulator.

Key features – Pneumatic components, width 65 mm

The following circuit symbols are shown as solenoid valves and are combinations (sets) consisting of a pneumatic valve with an appropriate solenoid intermediate plate. The symbols printed on the components can therefore vary.

Valve function Terminal code	Circuit symbol	Width 65 mm	Description
O	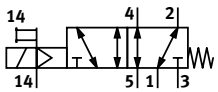	■	5/2-way valve, single solenoid • With intermediate solenoid plate • Mechanical spring
–	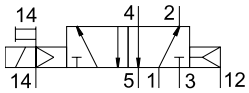	■	5/2-way valve, single solenoid • With intermediate solenoid plate • Pneumatic spring
M	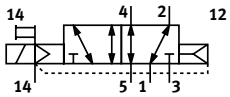	■	5/2-way valve, single solenoid • With intermediate solenoid plate • Pneumatic spring, air spring supplied by external pilot air
J	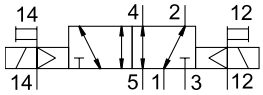	■	5/2-way valve, double solenoid • With intermediate solenoid plate
D	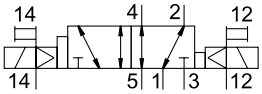	■	5/2-way valve, double solenoid • With intermediate solenoid plate • With dominant signal
G	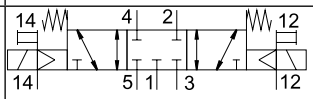	■	5/3-way valve • With intermediate solenoid plate • Mid-position closed
E	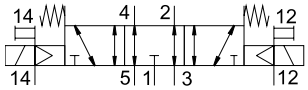	■	5/3-way valve • With intermediate solenoid plate • Mid-position exhausted
B	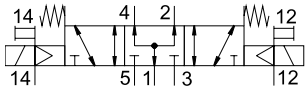	■	5/3-way valve • With intermediate solenoid plate • Mid-position pressurised
L	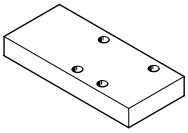	■	Cover plate

Note

A filter must be installed upstream of valves operated in vacuum mode. This prevents any foreign matter in the intake air getting into the valve (e.g. when operating a suction cup).

Key features – Pneumatic components, width 65 mm

Vertical stacking, width 65 mm

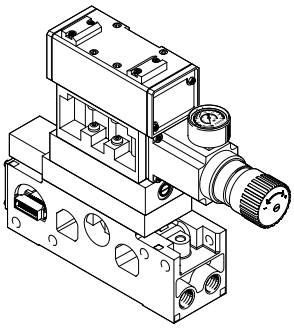

Additional components can be added to each valve position, ISO size 3, between the sub-base (manifold sub-base) and the valve.

These functions are known as vertical stacking modules and enable special functions or control of an individual valve position.

Vertical stacking components

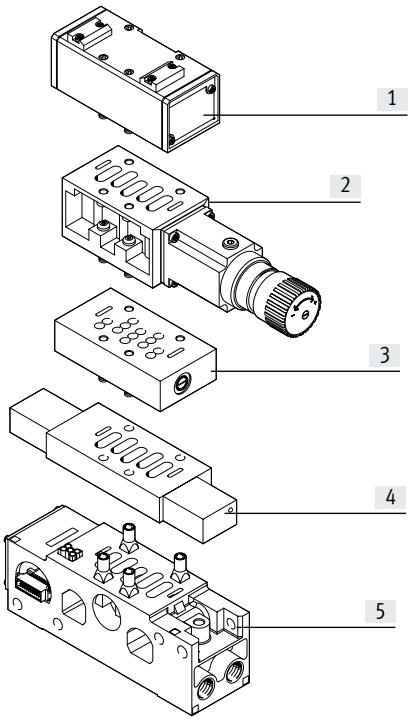

[1] Valve ISO size 3
[2] Intermediate pressure regulator plate
[3] Throttle plate
[4] Intermediate solenoid plate
[5] Manifold sub-base with port pattern to DIN ISO 5599-2

Note

Certain combinations are not possible due to the design of the individual vertical stacking components.

Key features – Pneumatic components, width 65 mm

Throttle plate, width 65 mm

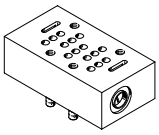

Intermediate plate with integrated exhaust air flow controls at ports 3 and 5 for regulating cylinder speed

Intermediate pressure regulator plate and pressure gauge, for width 65 mm

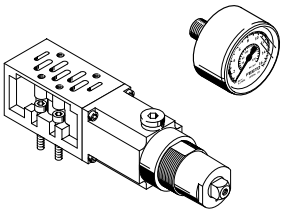

Intermediate plate with integrated pressure regulator for regulating pressure at

- Ports 2 and 4 (B, A)
- Port 4 (A)
- Port 2 (B)
- Port 1 (P)

Easy pressure setting
Pressure gauges can be screwed directly into the intermediate pressure regulator plate for setting the pressure.

Functions Code	Circuit symbol	Width 65 mm	Description
X	–	■	Throttle plate (with two one-way flow control valves for exhaust air flow control)
ZA	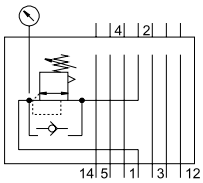	■	Intermediate pressure regulator plate, port 1
ZB	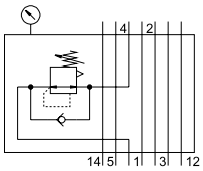	■	Intermediate pressure regulator plate, port 4
ZC	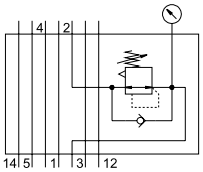	■	Intermediate pressure regulator plate, port 2
ZD	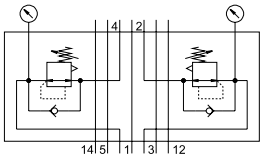	■	Intermediate pressure regulator plate, ports 2 and 4
S T R		■	Isolating disc for creating pressure zones Duct separation 1, 3, 5 Duct separation 1 Duct separation 3, 5
T		–	Pressure gauge for regulator, max. 10 bar
–		–	Pressure gauge for regulator, max. 16 bar

Key features – Pneumatic components, width 65 mm

Manifold sub-base for valves, width 65 mm

Adaptation to size 65 mm ISO size 3 is based on a modular system which consists of manifold sub-bases and valves. The manifold sub-bases contain a duct seal and electrical links, are screwed together and thus form the support system for the valves.

Inside the manifold sub-bases are the connection ducts for supplying compressed air to and exhausting the valve terminal as well as the working ports for the pneumatic cylinders for each valve.
Each manifold sub-base is connected to the next using two screws.

Individual valve terminal sections can be isolated and further manifold sub-bases can be inserted by loosening these screws. This ensures that the valve terminal can be rapidly and reliably extended, even for width 65 mm, ISO size 3.

Port pattern to ISO 5599-2 of the manifold sub-base for valves with width 65 mm

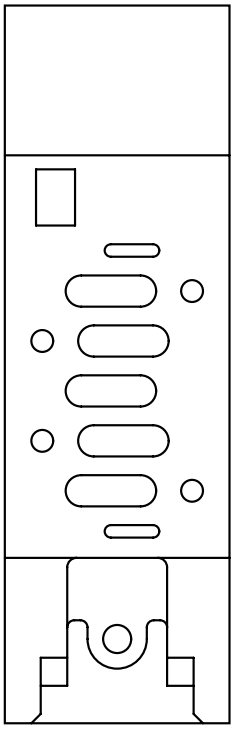

Key features – Pneumatic components, width 65 mm

Compressed air supply and exhausting

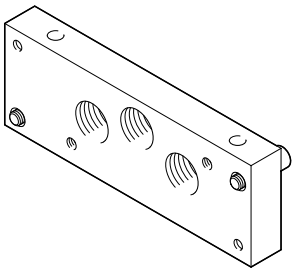

With the adaptation to width 65 mm ISO size 3, compressed air is supplied via the right end plate and/or the adapter plate VABA ...

Exhausting is either via silencers or ports for ducted exhaust air on the adapter plate VABA ... and/or on the right end plate.

The external pilot air supply for the valves of width 65 mm, ISO size 3, is provided via the end plate IEPR ....

Pilot air supply

When using valves with a width of 65 mm, the internal/external pilot air supply for the valves with a width of 18 ... 52 mm is provided via the adapter plate VABA-... .
The external pilot air supply for valves with a width of 65 mm is provided via the right end plate IEPR ....

Internal pilot air supply
If the working pressure is between 3 ... 10 bar, internal pilot air supply can be selected.
The pilot air supply is then branched from the compressed air supply 1 using an internal connection. Ports 12 and 14 on the right end plate should be sealed with a blanking plug.

External pilot air supply
If the working pressure is not in the range from 3 ... 10 bar, you must operate the valves of width 65 mm, ISO size 3 using external pilot air supply. The pilot air supply is then supplied via ports 12 and 14 on the right end plate.

Note
If a gradual pressure build-up is required in the system by using an external soft-start valve, then external pilot air should be selected so that the pilot pressure is already applied in full at the point of switch-on.

Creating pressure zones

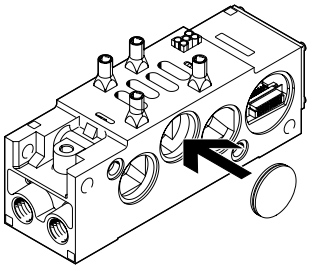

It is possible to have different supply pressures in the area containing valves with a width of 65 mm by installing isolating discs between two manifold blocks. Please note that the isolating disc is inserted into the manifold subbase from the right.

The air is supplied and exhausted via the left side via the adapter plate VABA ... and via the right end plate.

Normally only duct 1 has to be isolated. In special cases, isolating discs can also be inserted into exhaust ducts 3 and 5.

Manual override (MO)

MO with automatic return (non-detenting),

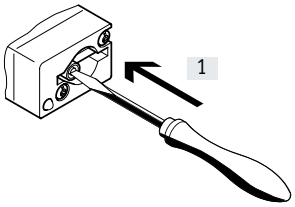

[1] Press in the plunger of the manual override using a pointed object or screwdriver. The valve is in the switching position.

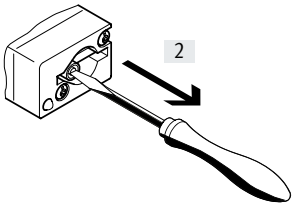

[2] Remove the pointed object or screwdriver.
The spring force pushes the plunger of the manual override back.
The valve returns to its initial position (not with double solenoid valve, code J, D).

Key features – Electric components, width 65 mm

Electrical connection concept

Replacing the solenoid coil fuse

Each solenoid coil is protected with a (fast-blowing) 0.315 A fuse.

These fuses are located behind the covering of the manifold sub-base on the printed circuit board.

Each single solenoid manifold sub-base has one fuse, while each double solenoid manifold sub-base has two fuses.

Note

Make sure that there is sufficient clearance for maintenance purposes.

Changing the solenoid coil fuse

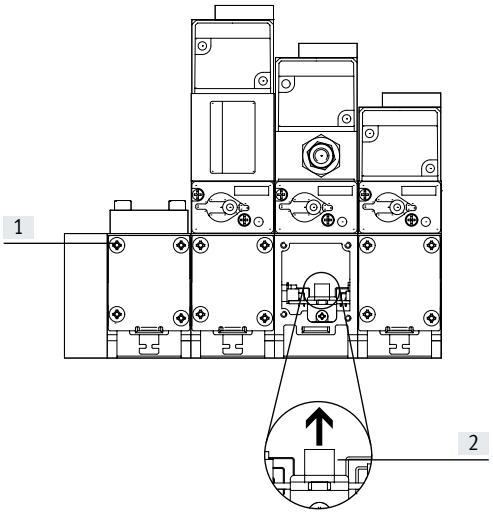

[1] Loosen the retaining screws in the cover

[2] Carefully remove the fuse from its base.
Right fuse for valve solenoid 14
Left fuse for valve solenoid 12

Key features – Mounting, width 65 mm

Mounting at the rear

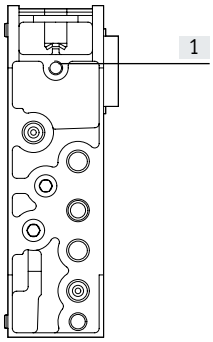

[1] Blind hole for mounting at the rear

The rear side of the manifold sub-bases has drilled holes (blind holes) for mounting the valve terminal on machines or metal racks (rear side mounting).

M8 threads need to be cut for this purpose.

Wall mounting with adaptation to width 65 mm, ISO size 3

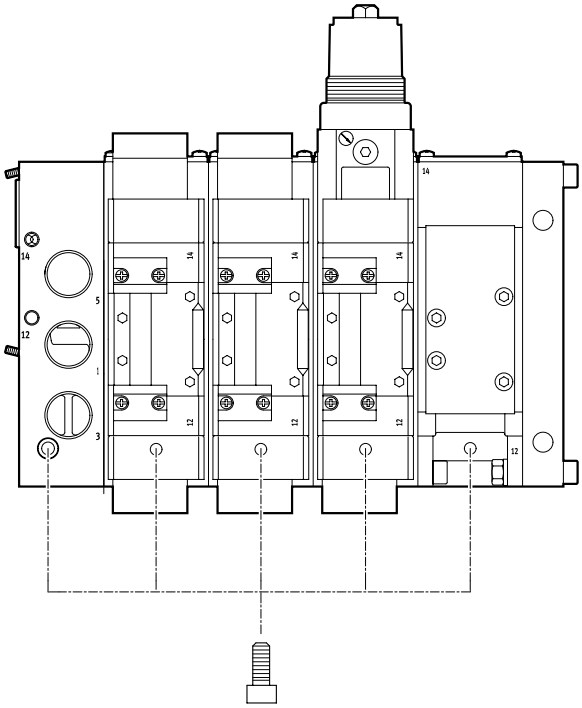

- With M8 screws on the adapter plate and the manifold sub-bases
- Drilled holes (blind holes) on the underside of the manifold sub-bases
- Drilled hole (through-hole) in the adapter plate

Note

The mounting holes of every second manifold sub-base must be used when mounting a valve terminal VTSA-ASI in size ISO 3 on a wall.

Datasheet – General technical data, width 65 mm

General technical data for valve functions		
Design • Valves • Intermediate pressure regulator plate		 Piston spool valve Pressure regulator with secondary exhausting
Width	[mm]	65
Nominal width	[mm]	14.5
Type of mounting • Valves • Throttle plate • Intermediate pressure regulator plate		 With through-holes on the manifold sub-base With through-holes on the manifold sub-base With through-holes on the manifold sub-base
Mounting position		Any
Manual override		Non-detenting
Pneumatic connections – Threaded connection		
Supply air	1	G1
Exhaust air	3/5	G1
Working ports	2/4	G1/2
Pilot air supply	1 2/14	G1/8

Technical data

Valve function	Terminal code	Valve switching times in [ms]			Flow direction		Reset method		Standard nominal flow rate in [l/min]
		On	Off	Change-over	Reversible	Not reversible	Pneumatic spring	Mechanical spring	
5/2-way, double solenoid	J	–	–	8	■	–	–	–	4500
5/2-way, double solenoid with dominant signal	D	29	36	–	■	–	–	–	4500
5-2-way single solenoid, pneumatic spring supplied by external pilot air	M	29	36	–	■	–	■	–	4500
5/2-way, single solenoid	–	29	36	–	–	■	■	–	4500
5/2-way, single solenoid	O	17	61	–	■	–	–	■	4500
5/3-way, closed[1)]	G	17	61	–	■	–	–	■	3600
5/3-way, exhausted[1)]	E	18	63	–	■	–	–	■	3800
5/3-way, pressurised[1)]	B	16	60	–	■	–	–	■	3800
Intermediate plate									
For single solenoid valves (MUH-ZP-D-3-24G)	–	–	–	–	–	■	–	■	–
For double solenoid, 5/3-way and valves with dominant signal (MUHX2-ZP-D-3-24G)	–	–	–	–	–	■	–	■	–
For single solenoid valves, pneumatic spring supplied by external pilot air (MUH-ZP-D-3-L-24G)	–	–	–	–	–	■	–	■	–
Intermediate pressure regulator plate									
LR-ZP-A-D-	ZB	–	–	–	–	–	–	–	2300
LR-ZP-B-D-	ZC	–	–	–	–	–	–	–	2300
LR-ZP-P-D-	ZA	–	–	–	–	–	–	–	1800
LR-ZP-A/B-D-	ZD	–	–	–	–	–	–	–	–

1) If neither solenoid coil is energised, the valve is moved to its mid-position by spring force.
If both solenoid coils are energised at the same time, the valve remains in the previously assumed switching position.

Datasheet – General technical data, width 65 mm

Operating and environmental conditions Valve functions, adapter plate		
Operating medium		Compressed air to ISO 8573-1:2010 [7:4:4]
Notes on operating/ Pilot medium		Lubricated operation possible (in which case lubricated operation will always be required)
Operating pressure for valve terminal		
• With ext. pilot air supply	[bar]	−0.9 ... +10
	[MPa]	−0.09 ... +1
• With int. pilot air supply	[bar]	3 ... 10
	[MPa]	0.3 ... 1
Pilot pressure for valve terminal	[bar]	3 ... 10
	[MPa]	0.3 ... 1
Operating pressure for valves		
• With ext. pilot air supply	[bar]	−0.9 ... +10 (for reversible valves, for non-reversible valves 2 ... 10)
	[MPa]	−0.09 ... +1 (for reversible valves, for non-reversible valves 0.2 ... 1)
• With int. pilot air supply	[bar]	3 ... 10 (for mechanically reset valves, for pneumatically reset valves 2 ... 10)
	[MPa]	0.3 ... 1 (for mechanically reset valves, for pneumatically reset valves 0.2 ... 1)
Pilot pressure for valves	[bar]	3 ... 10 (for mechanically reset valves, for pneumatically reset valves 2 ... 10)
	[MPa]	0.3 ... 1 (for mechanically reset valves, for pneumatically reset valves 0.2 ... 1)
Pressure regulation range	[bar]	0 ... 12 (for intermediate pressure regulator plate)
	[MPa]	0 ... 1.2 (for intermediate pressure regulator plate)
Ambient temperature	[°C]	−5 ... +50
Temperature of medium	[°C]	−5 ... +50
Mounting position		Any
Certification		c UL us – Recognized (OL) - (does not apply to valve J-5/2-D-3-C with part no. 151865)
CE marking (see declaration of conformity)		To EU EMC Directive [1] (for intermediate plate MUH ...)
Relative humidity	[%]	90

1) For information about the area of use, see the EC declaration of conformity at: www.festo.com/catalogue/... ➔ Support/Downloads.
If the devices are subject to usage restrictions in residential, commercial or light-industrial environments, further measures for the reduction of the emitted interference may be necessary.

Electrical data for solenoid coil		
Protection against electric shock (protection against direct and indirect contact to EN 60204-1/IEC 204)		Through PELV power supply unit
Operating voltage	[V]	24 DC ±10%
Power consumption per coil	[W]	3.1 (130 mA at 24 V DC)
Duty cycle		100% (50% concurrence)
Degree of protection to EN 60529		IP65 (when mounted)
Relative humidity	[%]	90% at 40 °C, non-condensing

Electrical data – Adapter plate Width		60 mm
Operating voltage	[V]	24 DC ±10%
Max. current rating per signal	[mA]	500
Duty cycle		100%
Degree of protection		IP65, NEMA 4 (for all types of signal transmission when mounted)

Datasheet – General technical data, width 65 mm

Materials	
Valves	Die-cast aluminium, steel
Adapter plate	Wrought aluminium alloy
Seals	NBR
Throttle plate	Anodised aluminium, brass
Intermediate pressure regulator plate	Die-cast aluminium, steel
Piston spool, screws	Steel
Note on materials	RoHS-compliant

Product weight Approx. weights [g]	
Adapter plate	2600
Manifold sub-base	1120
Right end plate	1120
Intermediate solenoid plate	500
Valves • Single solenoid, double solenoid • Mid-position	 760 840
Cover plate	180
Throttle plate	850
Intermediate pressure regulator plate • P, B, A • A/B	 1120 1770

Datasheet – Adaptation to width 65 mm

Dimensions Download CAD data ➔ www.festo.com

Adapter plate with components, width 65 mm

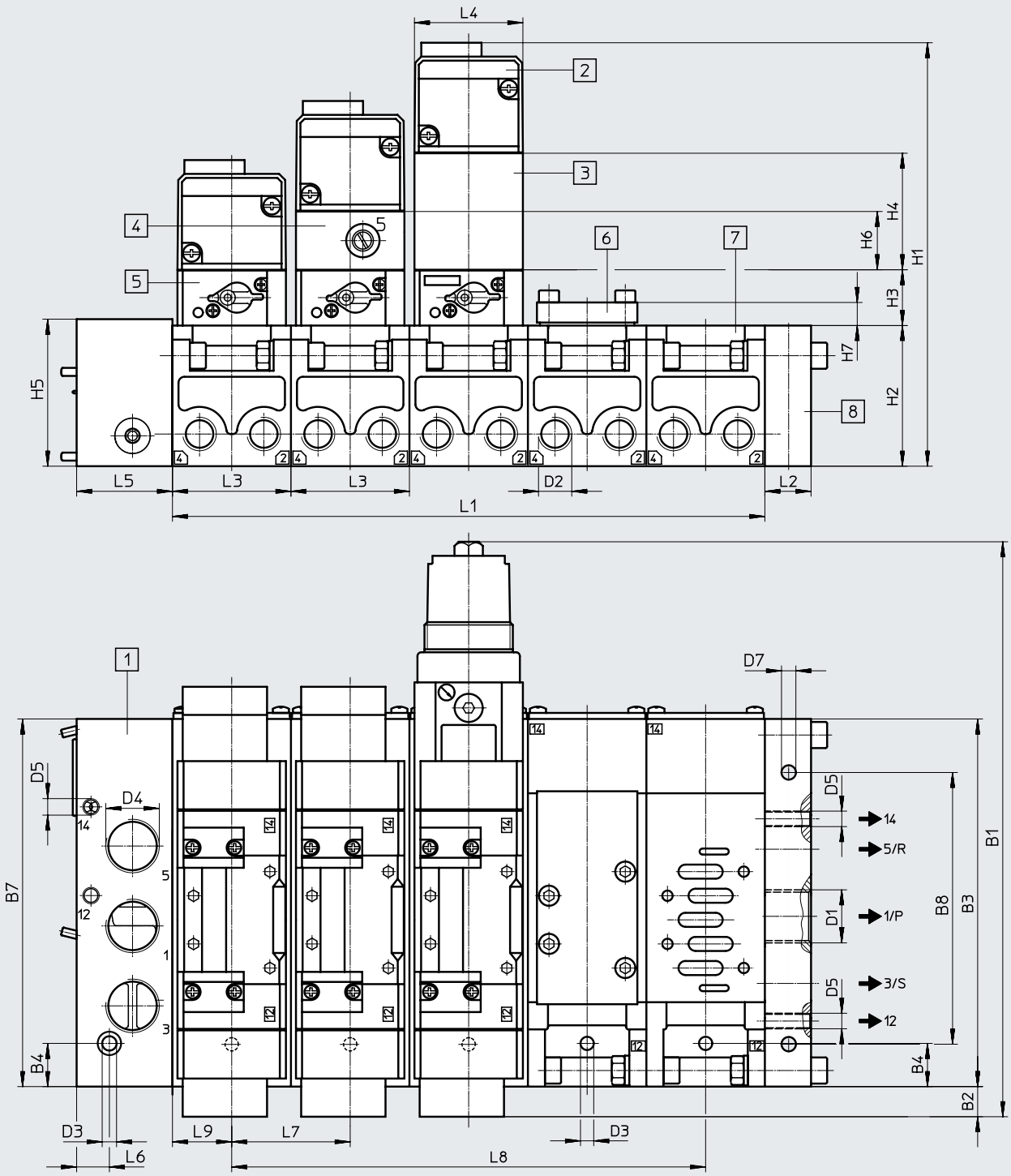

[1] Adapter plate
[2] ISO valve
[3] Intermediate pressure regulator plate
[4] Throttle plate
[5] Intermediate solenoid plate
[6] Cover plate
[7] Manifold sub-base
[8] End plate

Type		~B1	B2	B3	B4	B7	B8	D1	D2	D3	D4	D5	D7
VABA-S6-7-S2-3-P...	[mm]	315	6	230	27	230	170	G1	G1/2	9	G1	G1/8	9

Type		H1	H2	H3	H4	H5	H6	H7	L1[1]	L2	L3	L4	L5	L6	L7	L8[1]	L9
VABA-S6-7-S2-3-P...	[mm]	235	82	28	63	92	29	21.5	nx72	28	72	70	40	20.5	72	(n-1)x72	36

1) n = number of valves

Datasheet – Dimensions width 65 mm

Dimensions Download CAD data ➔ www.festo.com

Manifold sub-base for valves, width 65 mm

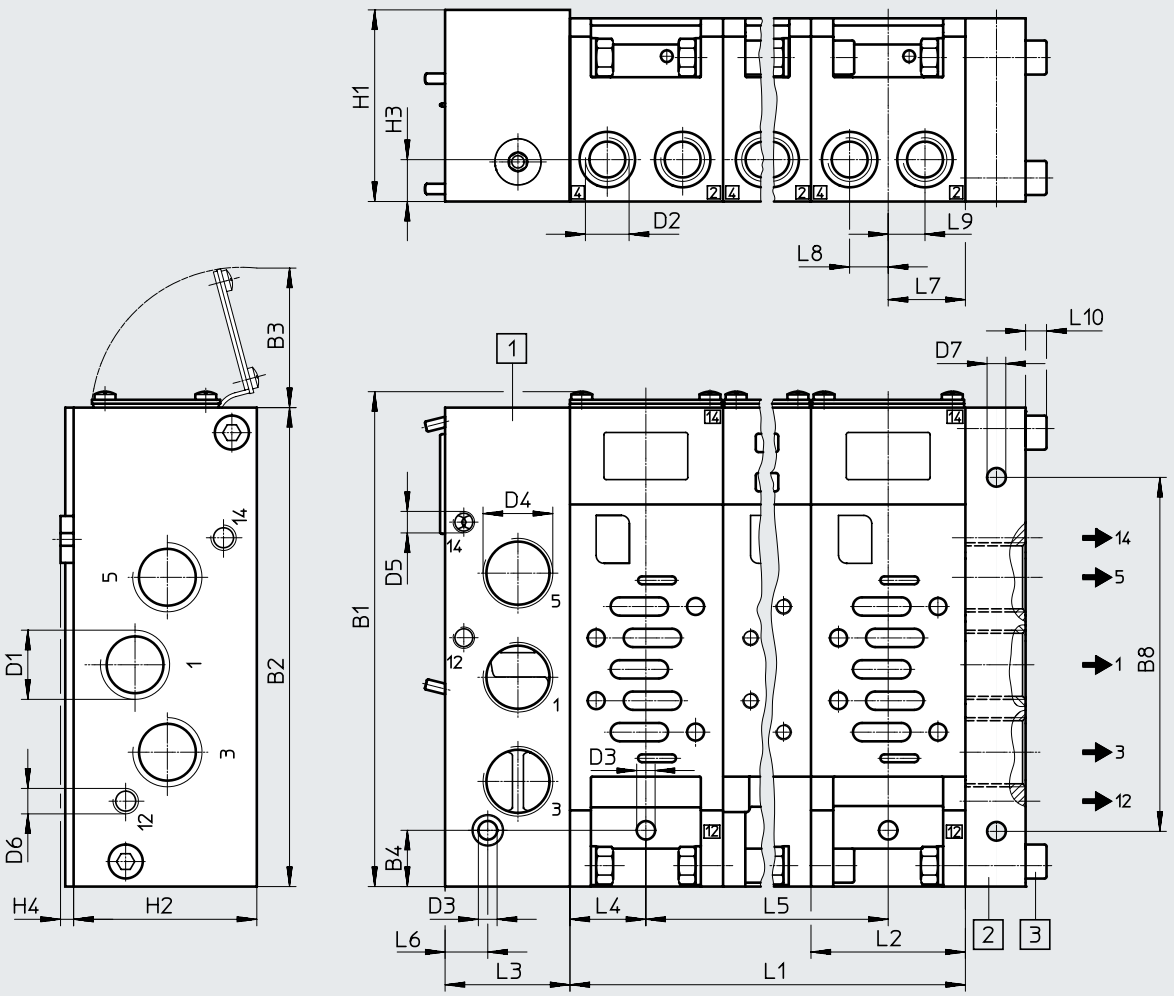

[1] Adapter plate
[2] Right end plate IEPR...
[3] Retaining screws for IEPR-04-D-3

Type		~B1	B2	B3	B4	B8	D1	D2	D3	D4	D5	D6	D7
VIGI/VIGM-04-D-3	[mm]	max. 237	230	max. 64	27	170	G1	G1/2	9.0	G1	G1/8	G1/8	9

Type		H1	H2	H3	H4	L1[1]	L2	L3	L4	L5[1]	L6	L7	L8	L9	L10
VIGI/VIGM-04-D-3	[mm]	92	82	20	5	nx72	72	60	36	(n-1)x72	20.5	36	18	18	10

1) n = number of valves

Datasheet – Dimensions width 65 mm

Dimensions Download CAD data ➔ www.festo.com

Intermediate pressure regulator plate

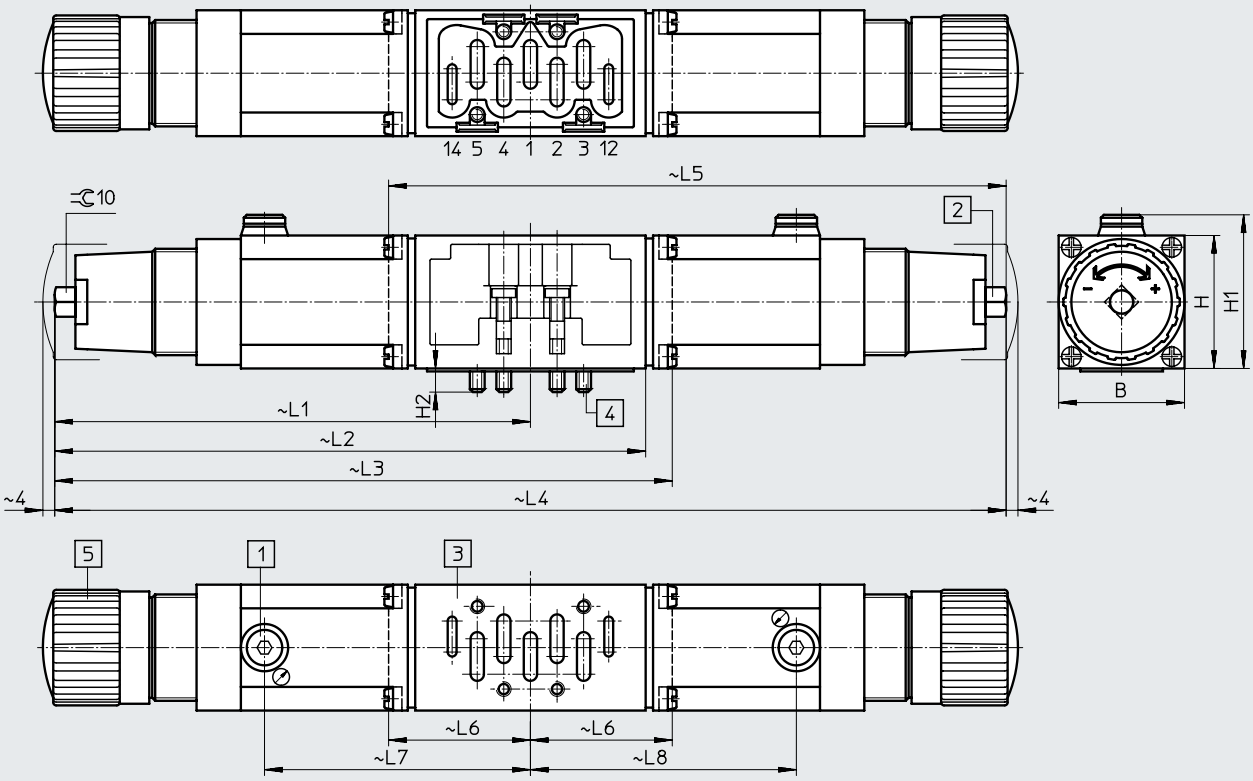

[1] Pressure gauge connection G1/8
[2] Adjusting screw
[3] Port pattern to ISO 5599-1
[4] Captive socket head screw
[5] Rotary knob

Type		B	H	H1	H2	L1	L2	L3	L4	L5	L6	L7	L8
LR-ZP-A-D-3	[mm]	70	63	65	14	201.5	–	274	–	–	–	119	–
LR-ZP-B-D-3	[mm]	70	63	65	14	201.5	–	–	–	274	72.5	–	119
LR-ZP-A/B-D-3	[mm]	70	63	65	14	201.5	–	–	403	–	–	119	119
LR-ZP-P-D-3	[mm]	70	63	65	14	201.5	260	–	–	–	–	119	–

Throttle plate

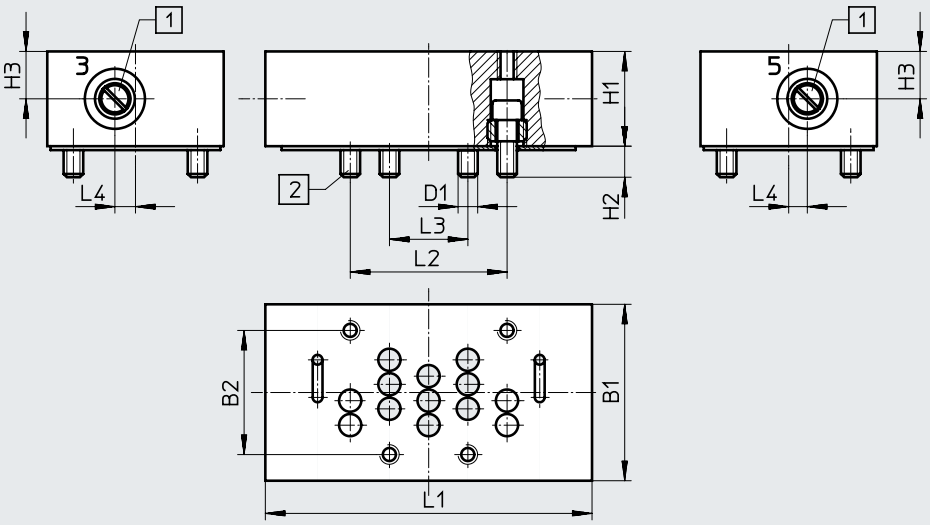

[1] Adjusting screw for flow control
[2] Socket head screws

Type		B1	B2	D1	H1	H2	H3	L1	L2	L3	L4
GRO-ZP-3-ISO-B	[mm]	70	48	M8	33	12	16.5	132	64	32	7

Ordering data – Individual valve 24 V DC, width 65 mm

Ordering data

Designation	Code	Description	Part no.	Type
Pneumatic valve (can be ordered individually)				
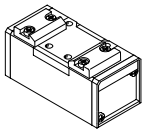	–	5/2-way valve, monostable, mechanical spring return	**151863**	**VL-5/2-D-3-FR-C**
	–	5/2-way valve, monostable, pneumatic spring return	**151864**	**VL-5/2-D-3-C**
	–	5/2-way valve, bistable	**151865**	**J-5/2-D-3-C**
	–	5/2-way valve, bistable, with dominant signal	**151866**	**JD-5/2-D-3-C**
	–	5/3-way valve, mid-position closed	**151867**	**VL-5/3G-D-3-C**
	–	5/3-way valve, mid-position exhausted	**151868**	**VL-5/3E-D-3-C**
	–	5/3-way valve, mid-position pressurised	**151869**	**VL-5/3B-D-3-C**

Accessories – Adaptation to width 65 mm

Ordering data

Designation	Code	Description	Part no.	Type
Manifold sub-base, port pattern to ISO 5599-2				
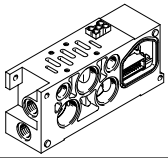	N[1]	1 valve position, 1 address, for single solenoid valves (with QS 16)	**18835**	**VIGM-04-D-3**
	NK[1]	1 valve position, 1 address, for single solenoid valves (with QS 12)		
Throttle plate				
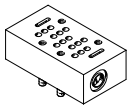	X	Throttle plate (with two one-way flow control valves for exhaust air flow control)	**119674**	**GRO-ZP-3-ISO-B**
Intermediate pressure regulator plate				
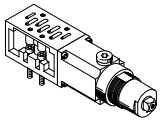	ZA	Port 1, pressure regulation range: 0.0...12 bar	**35968**	**LR-ZP-P-D-3**
	ZB	Port 4, pressure regulation range: 0.5...12 bar	**35971**	**LR-ZP-A-D-3**
	ZC	Port 2, pressure regulation range: 0.5...12 bar	**35426**	**LR-ZP-B-D-3**
	ZD	Port 2 and 4, pressure regulation range: 0.5...12 bar	**35429**	**LR-ZP-A/B-D-3**
Pressure gauge				
	T	For regulator, max. 10 bar	**162835**	**MA-40-10-1/8-EN**
	–	For regulator, max. 16 bar	**529046**	**MA-40-16-1/8-EN-DPA**

1) Code letter within the order code for a valve terminal configuration

Datasheet – Valves on individual sub-base

- Valve width
  to ISO 15407-2
  • 18 mm
  • 26 mm
  to ISO 5599-2
  • 42 mm (ISO 1)
  • 52 mm (ISO 2)

- Voltage
  24 V DC
  110 V AC

- Flow rate
  Width 18 mm:
  up to 600 l/min
  Width 26 mm:
  up to 1200 l/min
  Width 42 mm:
  up to 1500 l/min
  Width 52 mm
  up to 3400 l/min

General technical data

Design	Piston spool valve
Sealing principle	Soft
Actuation type	Electrical
Type of actuation	Piloted
Exhaust function, can be throttled	Via individual sub-base
Lubrication	Lifetime lubrication
Type of mounting • Valve • Individual sub-base	Screwed onto sub-base Screwed via through-hole
Mounting position	Any
Manual override	Detenting, non-detenting, concealed

Pneumatic connections – Threaded connection

Width		**18 mm**	**26 mm**	**42 mm**	**52 mm**
Pneumatic connection		Via sub-base			
Supply port	1	G1/8	G1/4	G3/8	G1/2
Exhaust port	3/5	G1/8	G1/4	G3/8	G1/2
Working ports	2/4	G1/8	G1/4	G3/8	G1/2
External pilot air supply port	14	M5	G1/8	G1/8	G1/8
Pilot exhaust air port	12	M5	G1/8	G1/8	G1/8

Operating and environmental conditions, individual sub-base

Operating medium		Compressed air to ISO 8573-1:2010 [7:4:4]
Notes on operating/ Pilot medium		Lubricated operation possible (in which case lubricated operation will always be required)
Operating pressure	[bar]	–0.9 ... +10
	[MPa]	–0.09 ... +1
Ambient temperature	[°C]	–5 ... +50
Certification		c UL us - Recognized (OL)
CE marking (see declaration of conformity)		To EU Low Voltage Directive (only for 110 V AC coils, not for variants with round plug M12)
		To EU Explosion Protection Directive (ATEX, EX1E[1]) (for variants with round plug M12 only)
		To EU RoHS Directive
UKCA marking (see declaration of conformity)		To UK instructions for EMC
		To UK EX instructions
		To UK RoHS instructions
ATEX category for gas		II 3G (EX1E[1])
Type of (ignition) protection for gas		Ex ec IIC T3 Gc X (EX1E[1])
Explosion ambient temperature	[°C]	–5 ... +50 (EX1E[1])
Explosion protection certification outside the EU		EPL Gc (GB)

1) EX1E certification for installation in a housing

Datasheet – Valves on individual sub-base

Standard nominal flow rate of valve/individual sub-base [l/min]				
Valve function (with valve code)	Width 18 mm		Width 26 mm	
	Valve	Valve on individual sub-base	Valve	Valve on individual sub-base
5/2-way, double solenoid (B52)	750	600	1400	1200
5/2-way, double solenoid with dominant signal (D52)	750	600	1400	1200
5/2-way, single solenoid, pneumatic spring (M52-A)	750	600	1400	1200
5/2-way, single solenoid, mechanical spring (M52-M)	750	600	1400	1200
5/3-way, closed (P53C)	700	550	1400[1)] 700[2)]	1200[1)] 700[2)]
5/3-way, exhausted (P53E)	700[1)] 330[2)]	500[1)] 330[2)]	1400[1)] 700[2)]	1200[1)] 700[2)]
5/3-way, pressurised (P53U)	700[1)] 330[2)]	500[1)] 330[2)]	1400[1)] 700[2)]	1200[1)] 700[2)]
5/3-way, exhausted, switching position 14 detenting (P53ED)[3)]	–	390[1)] 310[2)]	1400[1)] 700[2)]	1200[1)] 700[2)]
5/3-way, exhausted, switching position 12 detenting (P53EP)[3)]	–	390[1)] 320[2)]	1400[1)] 700[2)]	1200[1)] 700[2)]
5/3-way, port 2 pressurised, 4 exhausted, switching position 14 detenting (P53AD)[3)]	–	380[1)] 360[2)]	700[1)] 700[2)]	700[1)] 700[2)]
5/3-way, port 4 pressurised, 2 exhausted, switching position 14 detenting (P53BD)[3)]	–	400	–	900[1)] 840[2)]
2x3/2-way, single solenoid, closed (T32C)	600	500	1250	1100
2x3/2-way, single solenoid, open (T32U)	600	500	1250	1100
2x3/2-way, single solenoid, open/closed (T32H)	600	500	1250	1100
2x3/2-way, single solenoid, closed (T32N)	600	500	1250	1100
2x3/2-way, single solenoid, open (T32F)	600	500	1250	1100
2x3/2-way, single solenoid, open/closed (T32W)	600	500	1250	1100
2x2/2-way, single solenoid, closed (T22C)	700	500	1350	1100
2x2/2-way, single solenoid, closed (T22CV)	700	500	1350	1100

1) Switching position
2) Mid-position
3) The valve functions P53AD, P53BD, P53ED, P53EP are only available in the 24 V DC version. Values only apply to 24 V DC.

Datasheet – Valves on individual sub-base

Standard nominal flow rate of valve/individual sub-base [l/min]				
Valve function (with valve code)	Width 42 mm		Width 52 mm	
	Valve	Valve on individual sub-base	Valve	Valve on individual sub-base
5/2-way, double solenoid (B52)	2000	1500	4000	3400
5/2-way, double solenoid with dominant signal (D52)	2000	1500	4000	3400
5/2-way, single solenoid, pneumatic spring (M52-A)	2000	1500	4000	3400
5/2-way, single solenoid, mechanical spring (M52-M)	2000	1500	4000	3400
5/3-way, closed (P53C)	1900[1)] 950[2)]	1400[1)] 800[2)]	3600[1)] 1700[2)]	3200[1)] 1700[2)]
5/3-way, exhausted (P53E)	1900[1)] 950[2)]	1400[1)] 800[2)]	3600[1)] 1700[2)]	3200[1)] 1700[2)]
5/3-way, pressurised (P53U)	1900[1)] 950[2)]	1400[1)] 800[2)]	3600[1)] 1700[2)]	3200[1)] 1700[2)]
5/3-way, pressurised 1 to 2, 4 to 5 closed (P53F)[3)]	1700[1)] 700[2)]	1400[1)] 700[2)]	3000[1)] 900[2)]	2600[1)] 900[2)]
2x3/2-way, single solenoid, closed (T32C)	1600	1200	3000	2600
2x3/2-way, single solenoid, open (T32U)	1600	1200	3000	2600
2x3/2-way, single solenoid, open/closed (T32H)	1600	1200	3000	2600
2x3/2-way, single solenoid, closed (T32N)	1600	1200	3000	2600
2x3/2-way, single solenoid, open (T32F)	1600	1200	3000	2600
2x3/2-way, single solenoid, open/closed (T32W)	1600	1200	3000	2600
2x2/2-way, single solenoid, closed (T22C)	1600	1400	4000	3400
2x2/2-way, single solenoid, closed (T22CV)	1600	1400	–	–

1) Switching position
2) Mid-position
3) The valve function P53F is only available in the 24 V DC version. Values only apply to 24 V DC.

Electrical data, individual sub-base		
Acceptable current load at 40°C	[A]	2 (1 A per coil)
Degree of protection to EN 60529		IP65, NEMA 4 (for all types of signal transmission when mounted)
Variants with round plug M12		
Operating voltage range	[V DC]	24 ±10% (for variants with round plug M12 VABS-...-R3)
Surge resistance	[kV]	0.8
Pollution degree		3
Duty cycle	ED	100%
Variants with cable connector		
Operating voltage range	[V DC]	24 ±10% (for variants with cable terminal VABS-...-K1/C1, ...-K2)
	[V AC]	110 ±10% (50 ... 60Hz) (for variants with cable and spring-loaded terminal VABS-...-K1/C1, ...-K2)
Surge resistance	[kV]	4
Pollution degree		3
Duty cycle	[ED]	100%

Note
A cable connector is needed to ensure the IP degree of protection and to protect against tensile load, twisting and bending.

Datasheet – Valves on individual sub-base

Materials				
Width	18 mm	26 mm	42 mm	52 mm
Sub-base	Die-cast aluminium			Gravity die-cast aluminium
Valve	Die-cast aluminium, PA			
Seals	FPM, NBR			
Note on materials	RoHS-compliant			

Product weight [g]				
Width	18 mm	26 mm	42 mm	52 mm
Valves				
5/2-way solenoid valve, double solenoid (B52, D52)	172	276	439	732
5/2-way valve, single solenoid (M52A, M52M)	163	293	426	702
5/3-way solenoid valve (P53C, P53E, P53U)	191	320	456	780
5/3-way solenoid valve (P53BD)	172	301	–	–
5/3-way solenoid valve (P53ED, P53EP)	170	291	–	–
5/3-way solenoid valve (P53AD)	172	301	–	–
5/3-way solenoid valve (P53F)	–	–	456	780
2x 3/2-way solenoid valve (T32C, T32U, T32H, T32N, T32F, T32W)	190	335	442	740
2x 2/2-way solenoid valve (T22C, T22CV)	190	335	442	740
Individual connection				
Individual sub-base	192	302	386	815

Datasheet – Valves on individual sub-base

Dimensions Download CAD data ➔ www.festo.com

Individual sub-base with M12 plug, width 18 mm

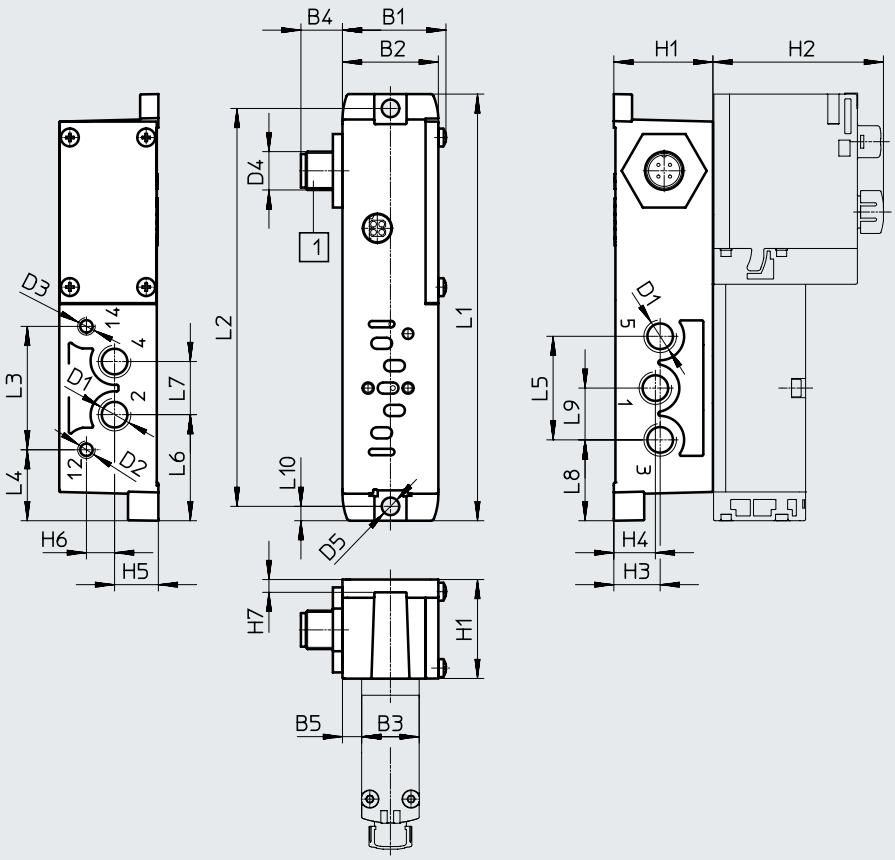

[1] Plug to
EN 61076-2-101

Type	B1	B2	B3	B4	B5	D1	D2	D3	D4	D5Ø	H1	H2	H3	H4	H5	H6	H7
VABS-S4-2S-G18-R3 1)	32.4	30	18	13	6	G1/8	M5	M5	M12x1	5.5	31	53.4	14.5	13	13.7	8.8	4
VABS-S4-2S-G18-B-R3 2)								–									

Type	L1	L2	L3	L4	L5	L6	L7	L8	L9	L10
VABS-S4-2S-G18-R3 1)	133.5	124.5	38.6	22.2	32.4	33.2	16.6	25.3	16.2	4.5
VABS-S4-2S-G18-B-R3 2)										

1) External pilot air supply
2) Internal pilot air supply

Note: this product conforms to ISO 1179-1 and ISO 228-1.

Datasheet – Valves on individual sub-base

Dimensions Download CAD data ➔ www.festo.com

Individual sub-base with cable terminals, width 18 mm

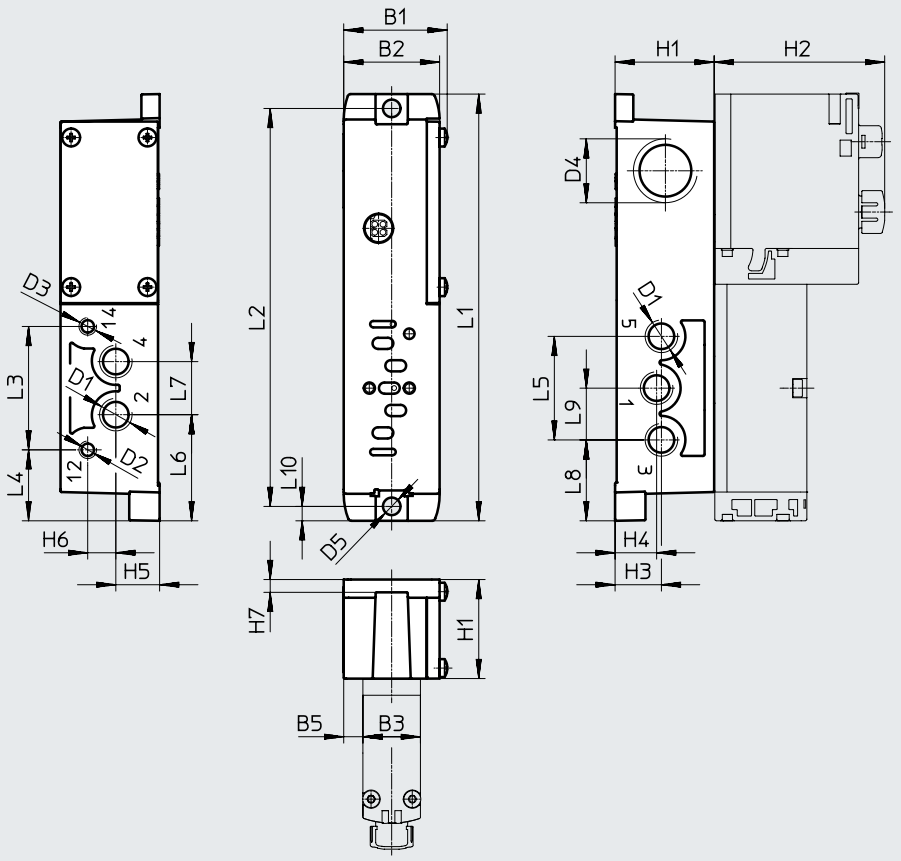

Type	B1	B2	B3	B5	D1	D2	D3	D4	D5 ⌀	H1	H2	H3	H4	H5	H6	H7
VABS-S4-2S-G18-K2 [1]	32.4	30	18	6	G1/8	M5	M5	M20x1.5	5.5	31	53.4	14.5	13	13.7	8.8	4
VABS-S4-2S-G18-B-K2 [2]							–									

Type	L1	L2	L3	L4	L5	L6	L7	L8	L9	L10
VABS-S4-2S-G18-K2 [1]	133.5	124.5	38.6	22.2	32.4	33.2	16.6	25.3	16.2	4.5
VABS-S4-2S-G18-B-K2 [2]										

1) External pilot air supply
2) Internal pilot air supply

Note: this product conforms to ISO 1179-1 and ISO 228-1.

Datasheet – Valves on individual sub-base

Dimensions Download CAD data ➔ www.festo.com

Individual sub-base with M12 plug, width 26 mm

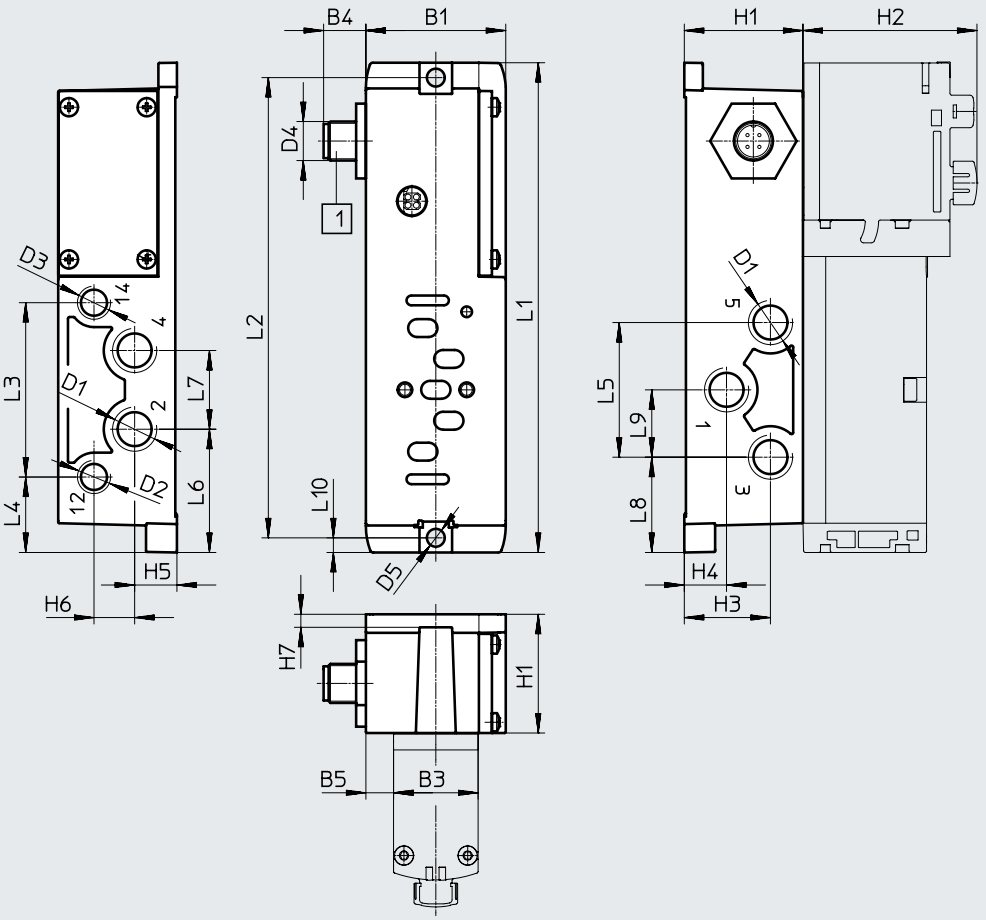

[1] Plug to
EN 61076-2-101

Type	B1	B3	B4	B5	D1	D2	D3	D4	D5 ø	H1	H2	H3	H4	H5	H6	H7
VABS-S4-1S-G14-R3 1)	43	26	13	8.5	G1/4	G1/8	G1/8	M12x1	5.5	36.5	53.5	26.5	13	13	12.5	4
VABS-S4-1S-G14-B-R3 2)							–									

Type	L1	L2	L3	L4	L5	L6	L7	L8	L9	L10
VABS-S4-1S-G14-R3 1)	150.6	141.5	53.6	23.2	41.4	37.9	24.2	29.3	20.7	4.5
VABS-S4-1S-G14-B-R3 2)										

1) External pilot air supply
2) Internal pilot air supply

Note: this product conforms to ISO 1179-1 and ISO 228-1.

Datasheet – Valves on individual sub-base

Dimensions Download CAD data ➔ www.festo.com

Individual sub-base with cable terminals, width 26 mm

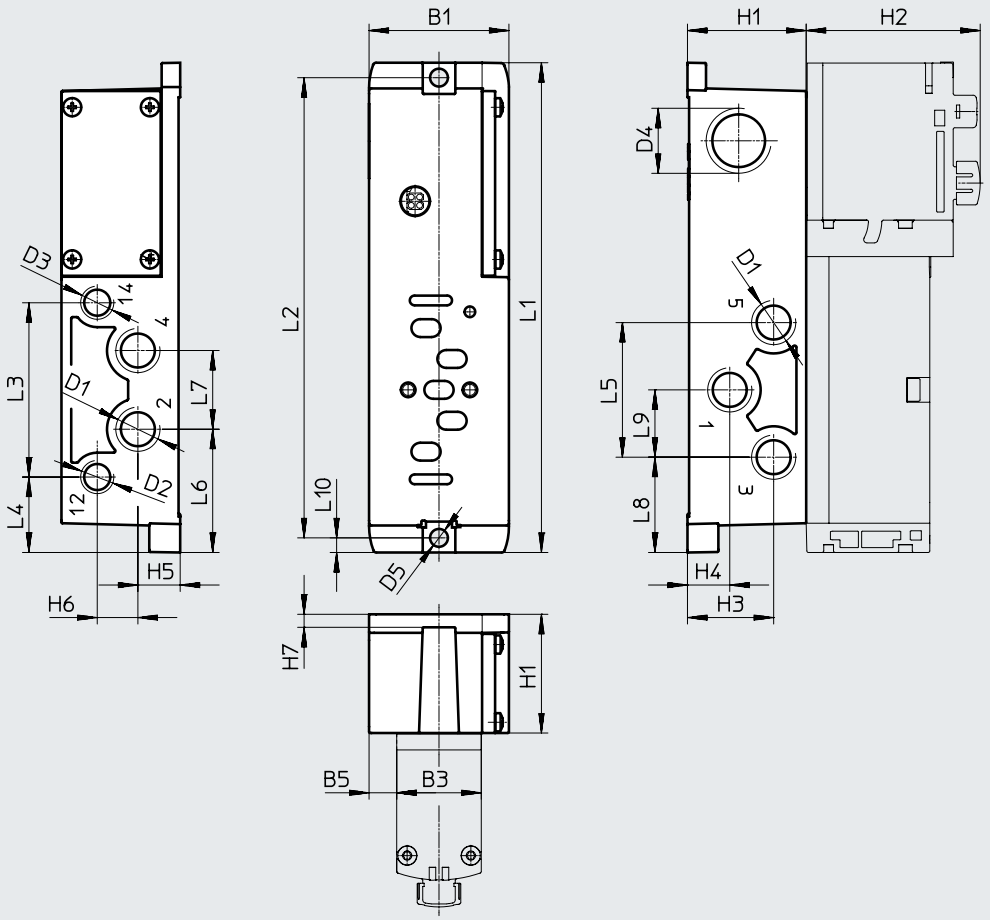

Type	B1	B3	B5	D1	D2	D3	D4	D5 ⌀	H1	H2	H3	H4	H5	H6	H7
VABS-S4-1S-G14-K2 [1]	43	26	8.5	G1/4	G1/8	G1/8	M20x1.5	5.5	36.5	53.5	26.5	13	13	12.5	4
VABS-S4-1S-G14-B-K2 [2]						–									

Type	L1	L2	L3	L4	L5	L6	L7	L8	L9	L10
VABS-S4-1S-G14-K2 [1]	150.6	141.5	53.6	23.2	41.4	37.9	24.2	29.3	20.7	4.5
VABS-S4-1S-G14-B-K2 [2]										

1) External pilot air supply
2) Internal pilot air supply

Note: this product conforms to ISO 1179-1 and ISO 228-1.

Datasheet – Valves on individual sub-base

Dimensions Download CAD data ➔ www.festo.com

Individual sub-base with M12 plug, width 42 mm

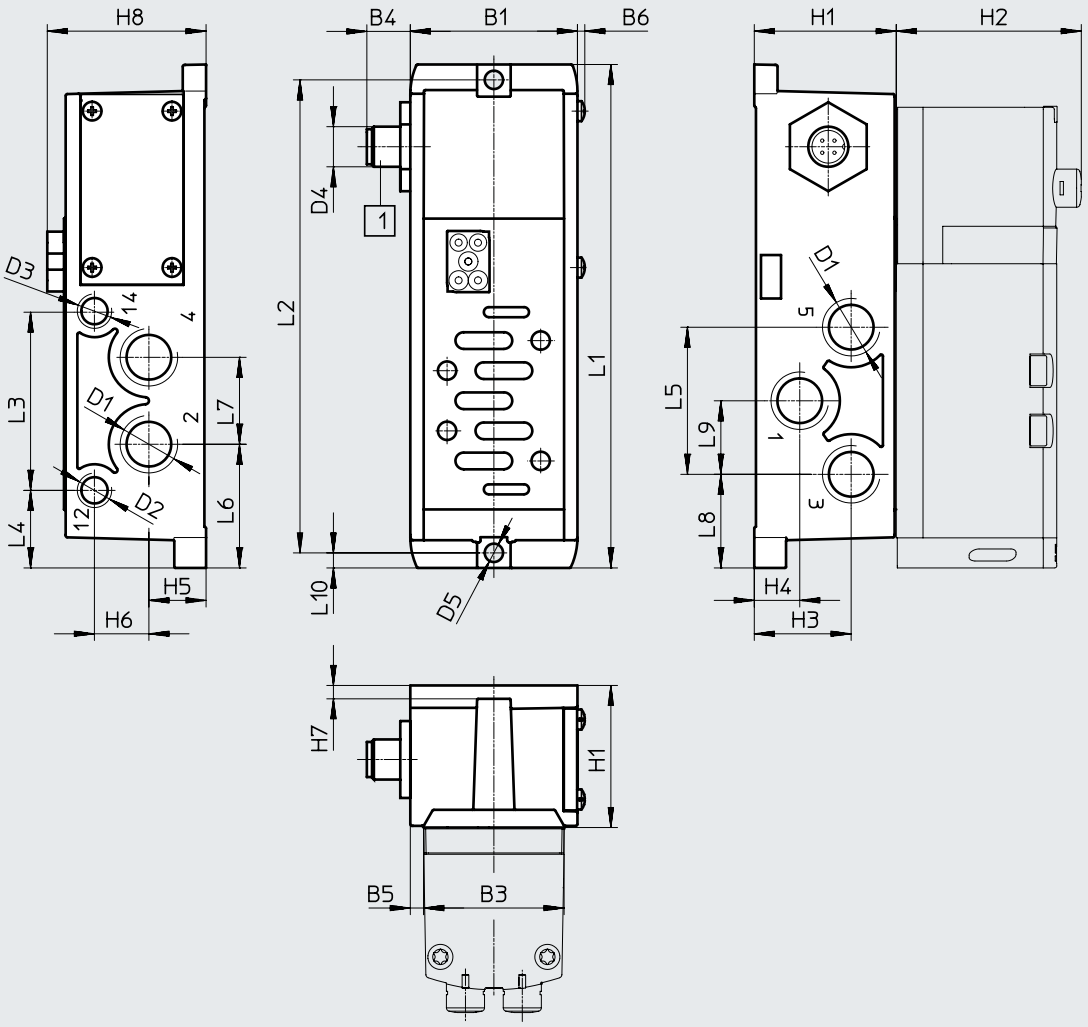

[1] Plug to
EN 61076-2-101

Type	B1	B3	B4	B5	B6	D1	D2	D3	D4	D5ø	H1	H2	H3	H4	H5	H6	H7	H8
VABS-S2-1S-G38-R3 1)	50	42	13	4	2.2	G3/8	G1/8	G1/8	M20x1.5	5.5	42.5	55.3	29	13.6	17.1	16.3	4	47.5
VABS-S2-1S-G38-B-R3 2)								–										

Type	L1	L2	L3	L4	L5	L6	L7	L8	L9	L10
VABS-S2-1S-G38-R3 1)	150.6	141.5	53.6	23.2	44	37	26	28	22	4.5
VABS-S2-1S-G38-B-R3 2)										

1) External pilot air supply
2) Internal pilot air supply

Note: this product conforms to ISO 1179-1 and ISO 228-1.

Datasheet – Valves on individual sub-base

Dimensions Download CAD data ➔ www.festo.com

Individual sub-base with spring-loaded terminal or for assembly by the user, width 42 mm

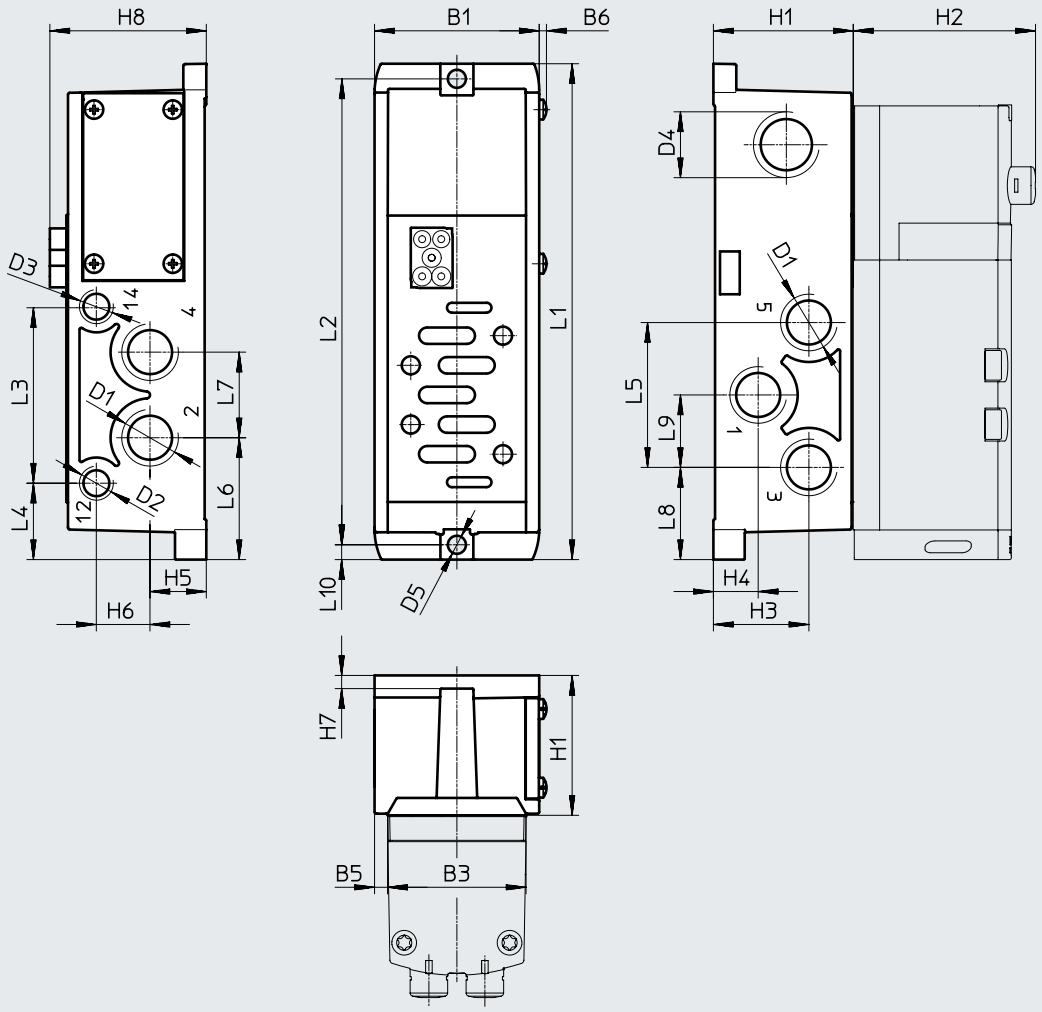

Type	B1	B3	B5	B6	D1	D2	D3	D4	D5 ⌀	H1	H2	H3	H4	H5	H6	H7	H8
VABS-S2-1S-G38-K1 [1]	50	42	4	2.2	G3/8	G1/8	G1/8	M20x1.5	5.5	42.5	55.3	29	13.6	17.1	16.3	4	47.5
VABS-S2-1S-G38-C1 [1]																	
VABS-S2-1S-G38-B-K1 [2]							–										
VABS-S2-1S-G38-B-C1 [2]																	

Type	L1	L2	L3	L4	L5	L6	L7	L8	L9	L10
VABS-S2-1S-G38-K1 [1]	150.6	141.5	53.6	23.2	44	37	26	28	22	4.5
VABS-S2-1S-G38-C1 [1]										
VABS-S2-1S-G38-B-K1 [2]										
VABS-S2-1S-G38-B-C1 [2]										

1) External pilot air supply
2) Internal pilot air supply

Note: this product conforms to ISO 1179-1 and ISO 228-1.

Note

Electrical connection

- VABS-...-K1: open end
- VABS-...-C1: spring-loaded terminal

Datasheet – Valves on individual sub-base

Dimensions Download CAD data ➔ www.festo.com

Individual sub-base with M12 plug, width 52 mm

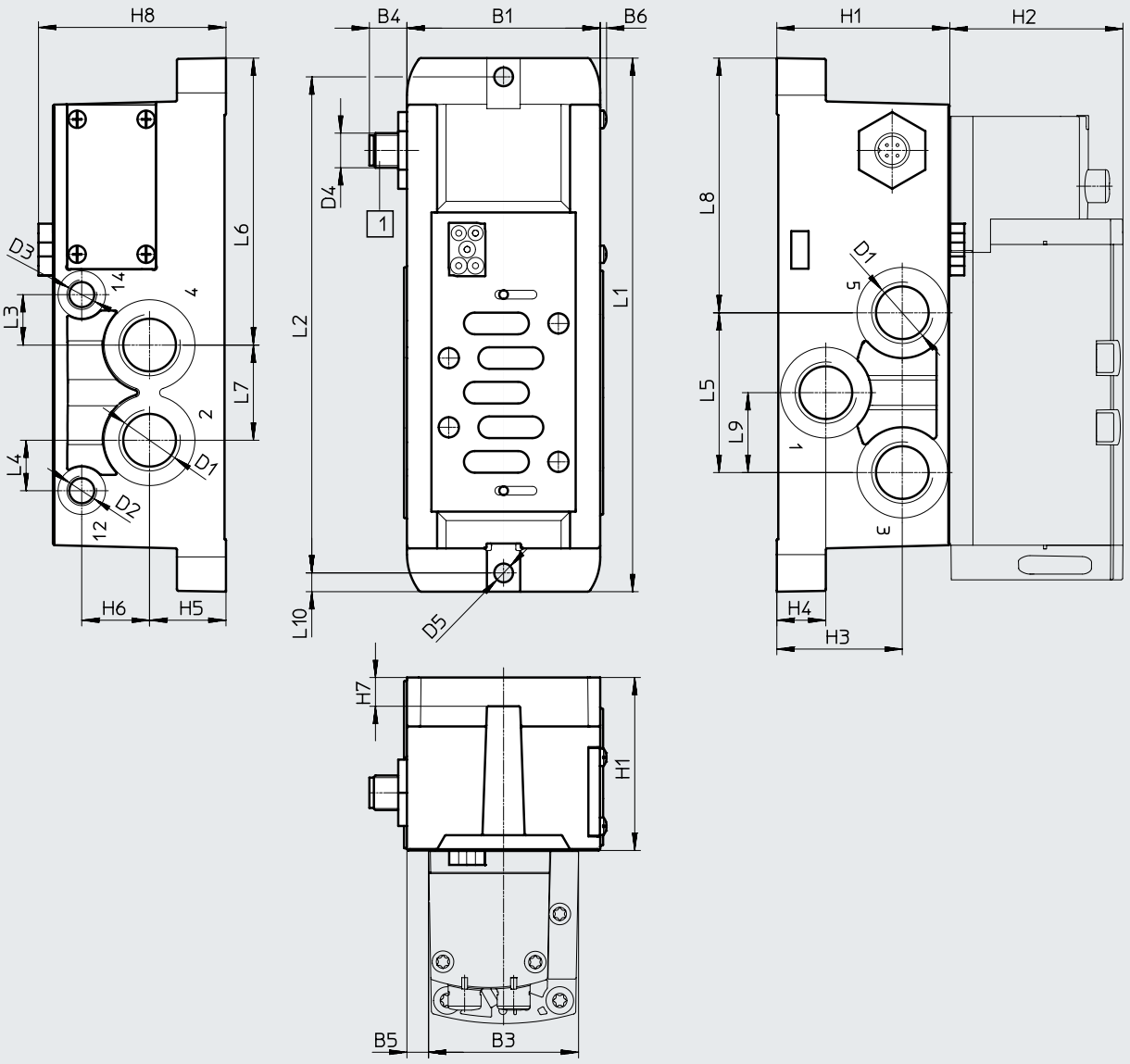

[1] Plug to
EN 61076-2-101

Type	B1	B3	B4	B5	B6	D1	D2	D3	D4	D5 ⌀	H1	H2	H3	H4	H5	H6	H7	H8
VABS-S2-2S-G12-R3 1)	67	52	13	7.5	2.2	G1/2	G1/8	G1/8	M12x1	6.5	60	60	43.5	17	26.5	23.5	10	65
VABS-S2-2S-G12-B-R3 2)								–										

Type	L1	L2	L3	L4	L5	L6	L7	L8	L9	L10
VABS-S2-2S-G12-R3 1)	185	172	17.5	17.5	55.4	99.5	33	88.3	27.7	6.5
VABS-S2-2S-G12-B-R3 2)										

1) External pilot air supply
2) Internal pilot air supply

Note: this product conforms to ISO 1179-1 and ISO 228-1.

Datasheet – Valves on individual sub-base

Dimensions Download CAD data ➔ www.festo.com

Individual sub-base with spring-loaded terminal or for assembly by the user, width 52 mm

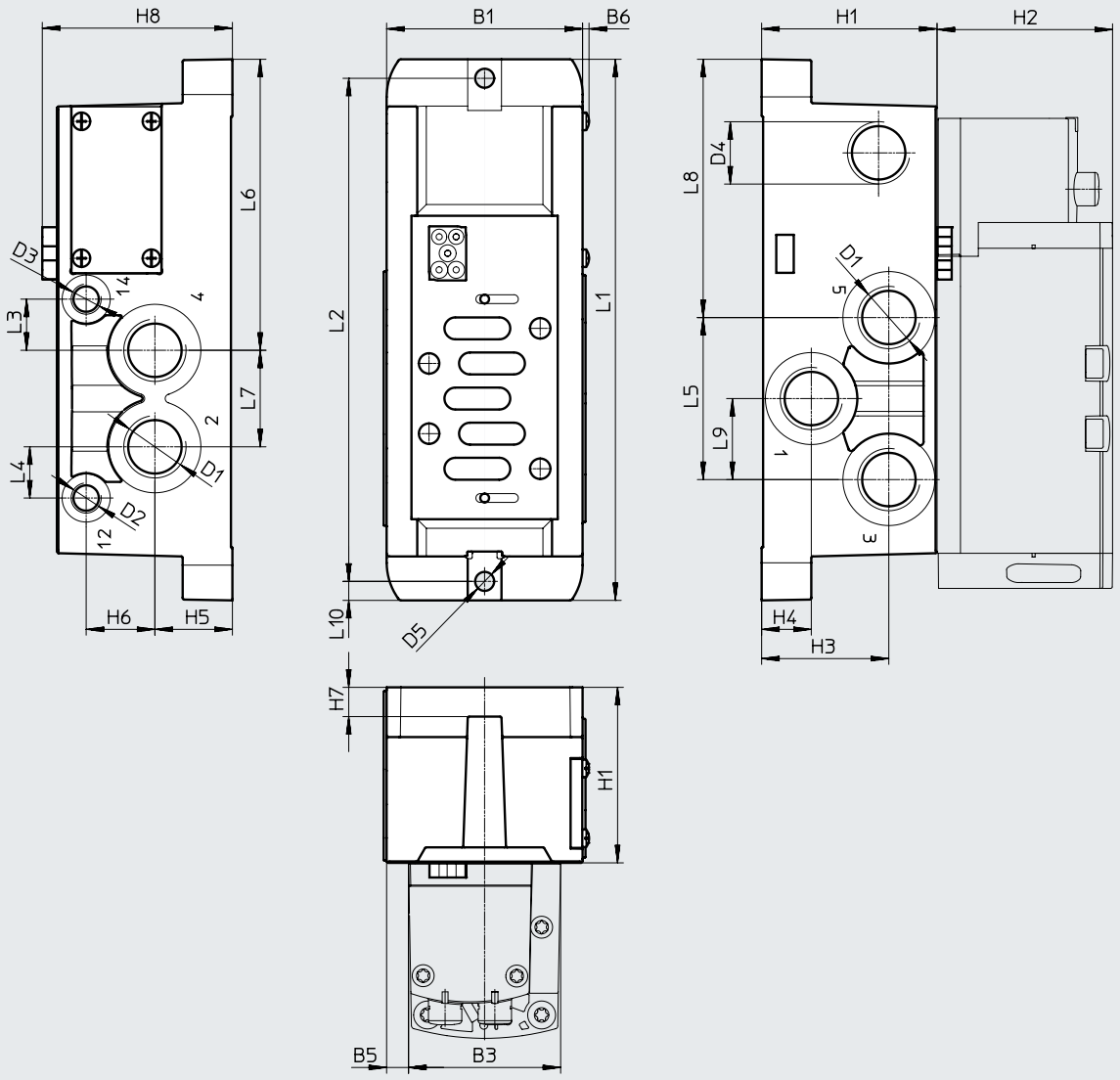

Type	B1	B3	B5	B6	D1	D2	D3	D4	D5 ⌀	H1	H2	H3	H4	H5	H6	H7	H8
VABS-S2-2S-G12-K1 1)	67	52	7.5	2.2	G1/2	G1/8	G1/8	M20x1.5	6.5	60	60	43.5	17	26.5	23.5	10	65
VABS-S2-2S-G12-C1 1)																	
VABS-S2-2S-G12-B-K1 2)							–										
VABS-S2-2S-G12-B-C1 2)																	

Type	L1	L2	L3	L4	L5	L6	L7	L8	L9	L10
VABS-S2-2S-G12-K1 1)	185	172	17.5	17.5	55.4	99.5	33	88.3	27.7	6.5
VABS-S2-2S-G12-B-K1 2)										
VABS-S2-2S-G12-B-C1 2)										

1) External pilot air supply
2) Internal pilot air supply

Note: this product conforms to ISO 1179-1 and ISO 228-1.

Note

Electrical connection

- VABS-...-K1: open end
- VABS-...-C1: spring-loaded terminal

Accessories – Individual connection

Ordering data

	Description		Width	Part no.	Type
Individual sub-base, electrical connection with plug M12 (without CE marking)					
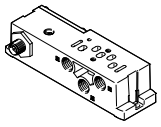	Threaded connection, internal pilot air supply	Connections G1/8	18 mm	**541070**	**VABS-S4-2S-G18-B-R3**
				8033156	**VABS-S4-2S-G18-B-R3-EX1E**
		Connections G1/4	26 mm	**541069**	**VABS-S4-1S-G14-B-R3**
				8033158	**VABS-S4-1S-G14-B-R3-EX1E**
		Connections G3/8	42 mm	**546104**	**VABS-S2-1S-G38-B-R3**
				8033160	**VABS-S2-1S-G38-B-R3-EX1E**
		Connections G1/2	52 mm	**555645**	**VABS-S2-2S-G12-B-R3**
				8033162	**VABS-S2-2S-G12-B-R3-EX1E**
	Threaded connection, external pilot air supply	Connections G1/8	18 mm	**541064**	**VABS-S4-2S-G18-R3**
				8033155	**VABS-S4-2S-G18-R3-EX1E**
		Connections G1/4	26 mm	**541063**	**VABS-S4-1S-G14-R3**
				8033157	**VABS-S4-1S-G14-R3-EX1E**
		Connections G3/8	42 mm	**546101**	**VABS-S2-1S-G38-R3**
				8033159	**VABS-S2-1S-G38-R3-EX1E**
		Connections G1/2	52 mm	**555640**	**VABS-S2-2S-G12-R3**
				8033161	**VABS-S2-2S-G12-R3-EX1E**
Individual sub-base, electrical connection via cable terminals					
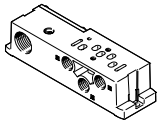	Threaded connection, internal pilot air supply	Connections G1/8	18 mm	**541067**	**VABS-S4-2S-G18-B-K2**
		Connections G1/4	26 mm	**541065**	**VABS-S4-1S-G14-B-K2**
	Threaded connection, external pilot air supply	Connections G1/8	18 mm	**539723**	**VABS-S4-2S-G18-K2**
		Connections G1/4	26 mm	**539725**	**VABS-S4-1S-G14-K2**
Individual sub-base, electrical connection via spring-loaded terminal					
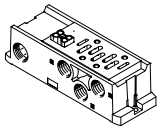	Threaded connection, internal pilot air supply	Connections G3/8	42 mm	**546762**	**VABS-S2-1S-G38-B-C1**
		Connections G1/2	52 mm	**555643**	**VABS-S2-2S-G12-B-C1**
	Threaded connection, external pilot air supply	Connections G3/8	42 mm	**546760**	**VABS-S2-1S-G38-C1**
		Connections G1/2	52 mm	**555638**	**VABS-S2-2S-G12-C1**
Individual sub-base, electrical connection via cable (open end)					
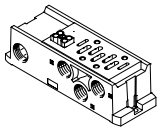	Threaded connection, internal pilot air supply	Connections G3/8	42 mm	**546102**	**VABS-S2-1S-G38-B-K1**
		Connections G1/2	52 mm	**555641**	**VABS-S2-2S-G12-B-K1**
	Threaded connection, external pilot air supply	Connections G3/8	42 mm	**546099**	**VABS-S2-1S-G38-K1**
		Connections G1/2	52 mm	**555636**	**VABS-S2-2S-G12-K1**

Accessories – Individual connection

Ordering data

	Description		Part no.	Type
Plug socket for the electrical connection of individual valves				
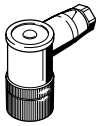	Angled socket, 1xM12, 4-pin, type A, screw terminal		**12956**	**SIE-WD-TR**
Connecting cable for electrical connection of individual valves, 6-way or 10-way				
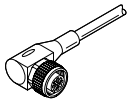	• Angled socket, 1xM12, 4-pin • Open end, 4-core	5 m	**164258**	**SIM-M12-4WD-5-PU**
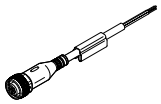	• Straight socket, 1xM12, 5-pin • Open end, 4-core	5 m	**541328**	**NEBU-M12G5-K-5-LE4**
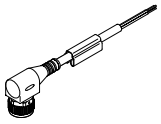	• Angled socket, 1xM12, 5-pin • Open end, 4-core	5 m	**541329**	**NEBU-M12W5-K-5-LE4**
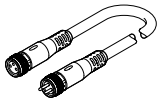	Modular system for a choice of connecting cables	–	**–**	**NEBU-...** ➔ Internet: nebu
Pneumatic connection accessories				
A selection of possible fittings, blanking plugs, silencers and other pneumatic accessories can be found in the chapter **Accessories** ➔ page: 260 or on the website via the individual search terms: **Internet** ➔ connection technology, silencer, blanking plug				

Accessories

Ordering data	Code	Description			Part no.	Type	PU[1]
Multi-pin plug distributor							
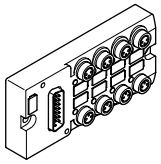	–	15-pin Sub-D socket/8x 3-pin M8 plugs		8 I/Os	**177669**	**MPV-E/A08-M8**	1
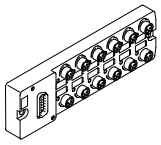	–	15-pin Sub-D socket/12x 3-pin M8 plugs		12 I/Os	**177670**	**MPV-E/A12-M8**	1
Push-in fitting with connecting thread							
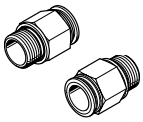	–	G1/8 for	Tubing O.D. 6 mm	Plastic releasing ring	**186096**	**QS-G1/8-6**	10
	E			Metal releasing ring	**558662**	**NPQM-D-G18-Q6-P10**	10
	–		Tubing O.D. 8 mm	Plastic releasing ring	**186098**	**QS-G1/8-8**	10
	E			Metal releasing ring	**558663**	**NPQM-D-G18-Q8-P10**	10
	–		Tubing O.D. 10 mm	Plastic releasing ring	**190643**	**QS-G1/8-10**	10
	–	G1/4 for	Tubing O.D. 8 mm	Plastic releasing ring	**186099**	**QS-G1/4-8**	10
	E			Metal releasing ring	**558665**	**NPQM-D-G14-Q8-P10**	10
	–		Tubing O.D. 10 mm	Plastic releasing ring	**186101**	**QS-G1/4-10**	10
	E			Metal releasing ring	**558666**	**NPQM-D-G14-Q10-P10**	10
	–		Tubing O.D. 12 mm	Plastic releasing ring	**186350**	**QS-G1/4-12**	10
	E			Metal releasing ring	**558667**	**NPQM-D-G14-Q12-P10**	10
	–	G3/8 for	Tubing O.D. 10 mm	Plastic releasing ring	**186102**	**QS-G3/8-10**	10
	E			Metal releasing ring	**558669**	**NPQM-D-G38-Q10-P10**	10
	–		Tubing O.D. 12 mm	Plastic releasing ring	**186114**	**QS-G3/8-12-I**	10
	E			Metal releasing ring	**558670**	**NPQM-D-G38-Q12-P10**	10
	–	G1/2 for	Tubing O.D. 12 mm	Plastic releasing ring	**186104**	**QS-G1/2-12**	1
	E			Metal releasing ring	**558672**	**NPQM-D-G12-Q12-P10**	10
	E		Tubing O.D. 14 mm	Metal releasing ring	**570451**	**NPQM-D-G12-Q14-P10**	1
	–		Tubing O.D. 16 mm	Plastic releasing ring	**186105**	**QS-G1/2-16**	1
Barbed hose fitting/push-in fitting							
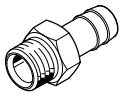	–	For right end plate		G3/4	**8040613**	**QS-G3/4-22**	1
				R1	**572260**	**N-1-P-19**	1
	–	For adapter plate		R1	**572260**	**N-1-P-19**	1

1) Packaging unit

Note

Metal push-in fittings type NPQM-... should be selected when the highest protection is required for electrical and electronic components (anti-static requirements).

Accessories

Ordering data	Code	Description		Part no.	Type	PU[1]
Silencer						
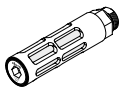	U	Standard design, connecting thread	G1/8	**2307**	**U-1/8**	1
			G1/4	**2316**	**U-1/4**	1
			G3/8	**6843**	**U-3/8-B**	1
			G1/2	**6844**	**U-1/2-B**	1
			G3/4	**6845**	**U-3/4-B**	1
			G1	**151990**	**U-1-B**	1
	A	Sintered design, connecting thread	G1/8	**1205860**	**AMTE-M-LH-G18**	20
			G1/4	**1205861**	**AMTE-M-LH-G14**	20
			G3/8	**1205862**	**AMTE-M-LH-G38**	10
			G1/2	**1205863**	**AMTE-M-LH-G12**	10
			G3/4	**1205864**	**AMTE-M-LH-G34**	10
			G1	**1205865**	**AMTE-M-LH-G1**	10
Blanking plug						
	–	Connecting thread	M5	**3843**	**B-M5**	10
			G1/8	**3568**	**B-1/8**	10
			G1/4	**3569**	**B-1/4**	10
			G1/2	**3571**	**B-1/2**	10
			G3/4	**3572**	**B-3/4**	1
			G1	**5763**	**B-1**	1
Other pneumatic connection accessories						
A selection of possible fittings, blanking plugs and silencers can be found on the website via the individual search terms: **Internet →** connection technology, silencer, blanking plug						

1) Packaging unit