Valve terminals type 10 CPV, Compact Performance

FESTO

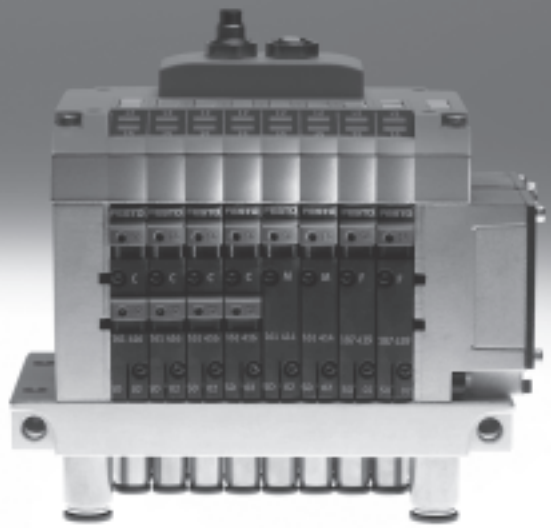

Valve terminals type 10 CPV, Compact Performance

Features

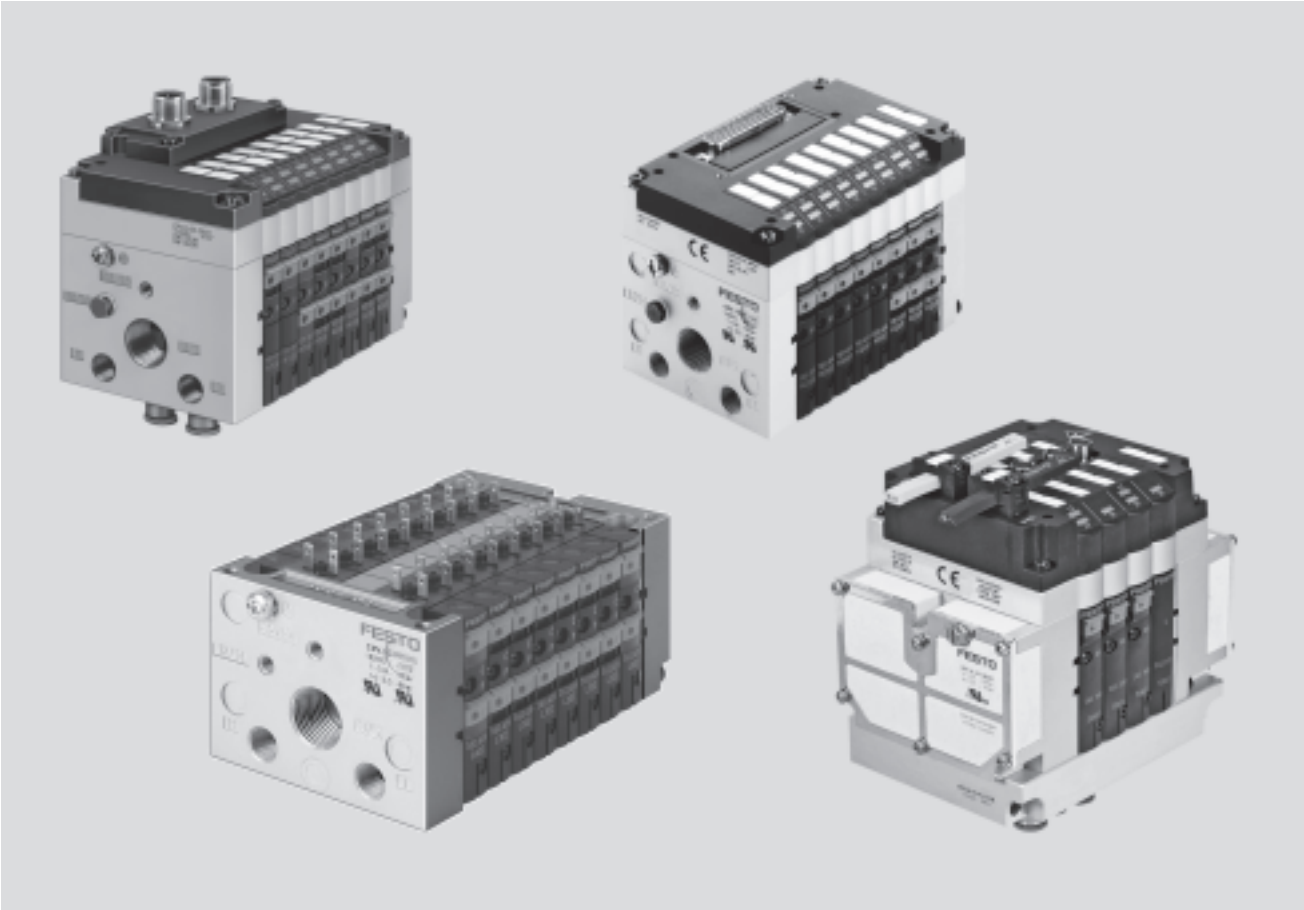

Innovative

- Cubic design for exceptional performance and low weight
- Low installation and bus connection costs
- Ideal for decentralised machines and system structures, for example
  - in handling technology
  - in conveyor technology
  - in the packaging industry
  - in sorting systems
  - in upstream machine functions
- Integrated diagnostics, condition monitoring (Fieldbus Direct)
- A string extension for Fieldbus Direct of 8 ... 32 inputs and 8 ... 32 outputs is possible without any difficulty (version-dependent)

Versatile

- Flexible and cost-effective connection of 2 to 8 valve slices
- Highly flexible thanks to:
  - various pneumatic functions (valve variants)
  - different pressure ranges
  - vacuum switches
  - integrated vacuum generation
  - relay plates with floating electrical outputs
- Separator plates for the formation of pressure zones
- Valves with integrated separation of channels 1 and 11
- Blanking plates for future expansion

Reliable

- LED displays
- Manual valve overrides
- Protection class to IP65
- CE symbol
- ATEX certification (see Technical Data)

Easy to mount

- Ready to install unit, already assembled and tested
- Lower cost of selection, ordering, installation and commissioning
- Secure mounting on wall or H-rail mounting
- Pneumatic multiple connector plate – fast assembly without the need to replace the connected tubing
- Assembly optimised for control cabinets

Valve terminals type 10 CPV, Compact Performance

Features

Simple electrical connections:
- Individual connec-tion/ET200X/ET200pro
- Multi-pin plug connector
- AS-interface
- Installation system CP/CPI
- Fieldbus Direct

Operating voltage connection

Quick mounting:
- Directly using screws
- On a H-rail
- Via the pneumatic multiple connector plate

Robust metal thread or pre-assembled QS connections

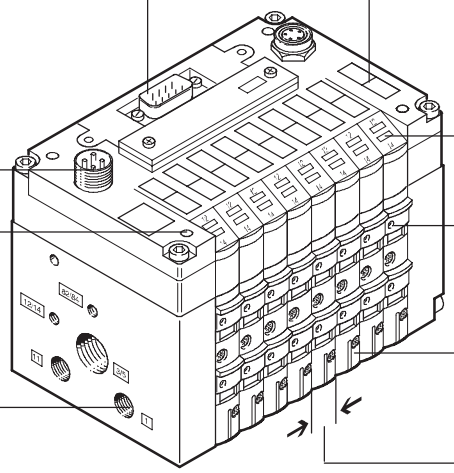

Inscription labels

Reduced downtimes:
LED diagnosis on the spot

Reliable operation:
Manual override, non-detenting, detenting or blocked

Comprehensive range of valve functions, pressure zone formation, blanking plates

Width
- 10 mm
- 14 mm
- 18 mm

Equipment options

Valve functions

- 5/2-way valve, single solenoid
- 5/2-way valve (with channel separation 1, 11), single solenoid
- 5/2-way valve, single solenoid, fast-switching
- 5/2-way valve, double solenoid
- 5/2-way valve (with channel separation 1, 11), double-solenoid
- 2x 3/2-way valve, normally closed
- 2x 3/2-way valves (with channel separation 1, 11), normally closed
- 2x 3/2-way valve, normally open
- 2x 3/2-way valves (with channel separation 1, 11), normally open
- 2x 3/2-way valve, 1x normally open, 1x closed
- 2x 3/2-way valve (with channel separation 1, 11) 1x normally open, 1x closed
- 2x 3/2-way valve, normally closed, integrated back pressure protection
- 5/3-way valve, mid-position closed
- 2x 2/2-way valve, normally closed
- 2x 2/2-way valve (with channel separation 1, 11), normally closed
- 2x 2/2-way valve, 1x normally open, 1x closed
- 2x 2/2-way valve (with channel separation 1, 11) 1x normally open, 1x closed
- Vacuum generator
- Vacuum generator and 2/2-way valve with ejector pulse
- Certain terminals allow the choice of a relay plate with two floating contacts in place of a valve sub-base

Special features

Individual connection

- 2 … 8 valve positions, max. 16 solenoid coils

Multi-pin plug connection

- 4, 6 or 8 valve positions, max. 16 solenoid coils

AS-interface

- 2, 4 or 8 valve positions, max. 8 solenoid coils
- 4 or 8 inputs for 4 or 8 valve positions

Installation system CP/CPI

- 4, 6 or 8 valve positions, max. 16 solenoid coils
- With CP/CPI string extension, further valve terminals and I/O modules with CP/CPI function can be connected

Fieldbus Direct

- 8 valve positions, max. 16 solenoid coils
- With CP/CPI string extension, further valve terminals and I/O modules with CP/CPI functions can be connected

Electrical connection for ET200X/ET200pro

- 8 valve positions, max. 16 solenoid coils

Note

A moulded seal is required for the valve terminal CPV10-ET 200pro in order to achieve the IP protection class.

The moulded seal CPV10-..-GE-8 or CPV14-..-GE-8 must be ordered separately.

Valve terminal configurator

Online via: ➔ www.festo.com

A valve terminal configurator is available to help you select a suitable valve terminal CPV. This makes it much easier for you to find the right product.

The valve terminals are fully assembled according to your order specifications and individually tested. This reduces assembly and installation time to a minimum.
You order a valve terminal type 10 using the order code.

Ordering system for type 10
➔ Internet: type 10

The illustration above provides an example of a valve terminal configuration.
The following steps explain how you arrive at the order code:

Once you have called up ➔ www.festo.com, select the online version of the digital product catalogue from the "Products" submenu. Activate the "Direct Search" menu.

Here you can enter a "Part No." (e.g. 18210), "Type" (e.g. CPV14) or "Article Designation" (e.g. valve terminal) to find the valve terminal you want. Click on the link "Configure common options".

You can then configure the valve terminal step by step (from left to right) according to your requirements.
Click on the shopping basket to save the selected configuration (this does not trigger an order).
You can switch to expert mode at any time by clicking on the "Further options" link.
This provides you with extended options for configuring your valve terminal.

2D/3D CAD data

Online via: ➔ www.festo.com

You can request the CAD data for a valve terminal you have configured. To do this, perform the product search as described above. Enter the shopping basket and click on the CAD icon (compass). On the next screen you can generate a 3D preview or request another data format of your choice by e-mail.

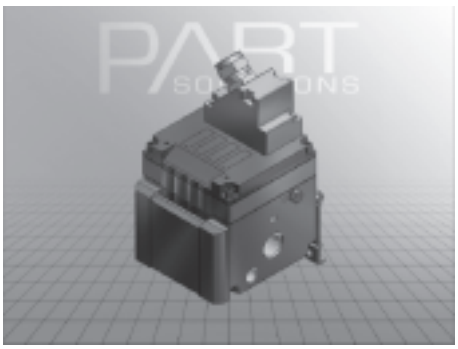

Electrical connections

Individual connection

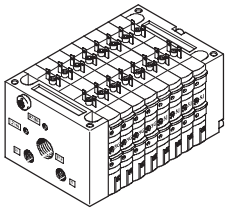

Connection is independent of the control technology used. This ensures correct polarity during installation. The connector plug is equipped with an LED which indicates switching status, and an overvoltage protective circuit.

It also features a built-in current reduction circuit. Individual connection permits the selection of 2 to 16 solenoid coils (divided between two to eight valve slices, including in uneven stages).

An intrinsically safe version rounds off the range.

Further information

➔ Internet: type 10 CPV10-EX-VI

Multi-pin plug connection

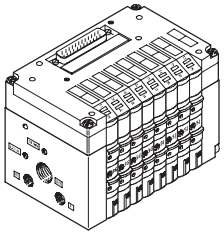

Control signals from the controller to the valve terminal are transmitted via a pre-assembled multi-wire cable, which substantially reduces installation time. The current reduction circuit for the valves is also integrated in the multi-pin plug connection.

This valve terminal can be equipped with 4 to 16 solenoid coils (4, 6 or 8 valve slices).

AS-interface connection

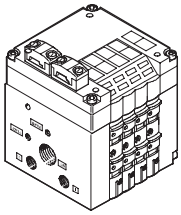

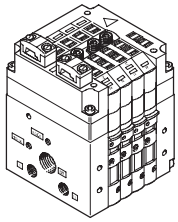

A special feature of the AS-interface is its ability to simultaneously transmit data and supply power via a two-wire cable. The encoded cable profile prevents connection with incorrect polarity. If the valves have to be disconnected from mains power in an emergency, they can also be supplied with electrical power via a separate connection. Two versions are available for valve terminals for A/B operation.

The valve terminal with AS-interface can be configured as follows:

- Without inputs, with two or four valve slices (max. 4 solenoid coils) and additional power supply
- With four inputs and four valve slices (max. 8 solenoid coils)
- With four or eight inputs and four or eight valve slices (max. 8 solenoid coils) and additional power supply
- With four or eight inputs and four or eight valve slices incl. vacant position or positions (max. 6 solenoid coils for A/B operation to SPEC.2.1) and additional power supply. In A/B operation to SPEC. 3.0 with profile 7.A.7 eight solenoid coils can be connected in contrast to the SPEC 2.1 version.

Further information

➔ Internet: as-interface

Note

Valve terminals to SPEC.2.1 cannot be operated on a master to SPEC.3.0 with profile 7.A.7.

Electrical connections

Installation system CP/CPI

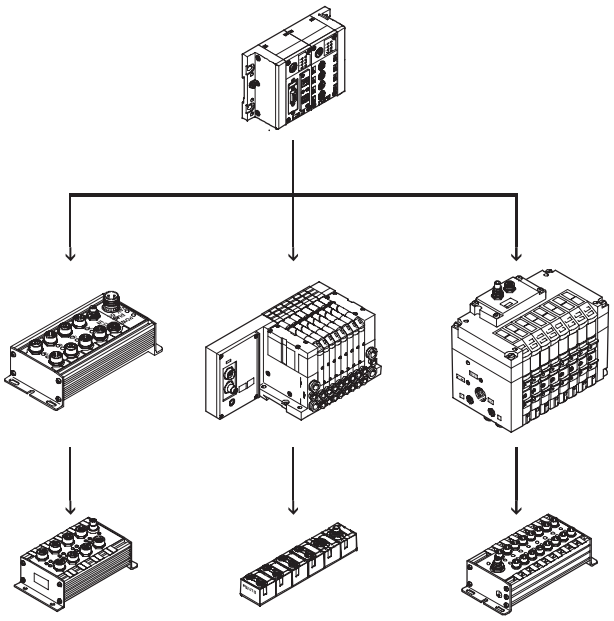

Valve terminals with fieldbus connection are intended for connection to higher-order fieldbus nodes or to control blocks. A fieldbus node or control block also enables the connection of decentralised input/output modules. The following fieldbus protocols are supported:

- Festo fieldbus, ABB CS31, Moeller Suconet K
- Interbus
- Allen Bradley (1771 RIO)
- DeviceNet
- Profibus-DP
- CANopen
- CC-Link

Four strings with up to 32 inputs and 32 outputs (version-dependent) can be connected to a fieldbus node or control block. The CPV valve terminal is treated like an output module with up to 8 outputs (4, 6 or 8 valve slices or 4 to 16 solenoid coils per terminal). The connecting cables transmit all required electrical signals (control signals, operating voltage for the internal electronics of the module and load voltage supply for connected valves).

Further information

➔ Internet: ctec

Fieldbus Direct

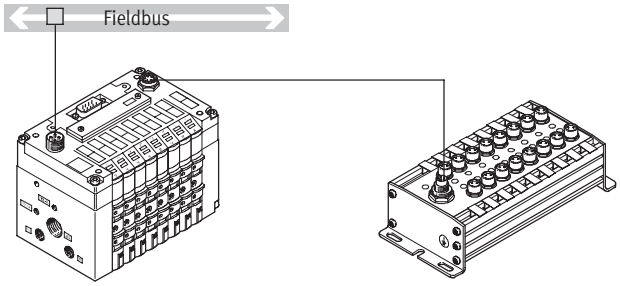

Fieldbus Direct is a system for the compact connection of a CPV, CPV-SC, CPA-SC or CDVI valve terminal to different fieldbus standards such as Profibus and DeviceNet.
The fieldbus node is directly integrated in the electrical interface of the valve terminal and therefore takes up only a minimal amount of space. The CPI string extension option allows the functions and components of the CPI system to be used.

The new high-performance CPI string extension offers up to 4 supplementary CPI modules, combined with CP or CPI-compatible valve terminals for extension purposes. An expansion of the system, Fieldbus Direct of 8 … 32 inputs and 8 … 32 outputs is possible without any difficulty.

ET200X/ET200pro pneumatic interface for CPV10 and CPV14

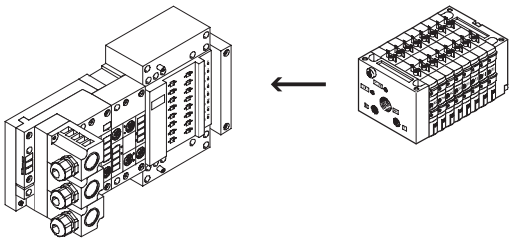

Adaptation of the CPV valve terminal to the input/output module ET200X/ET200pro from Siemens:
The combination of the ET200X/ET200pro functional modules and the pneumatic functions of the CPV valve terminal provides a highly integrateable automation solution for systems using electrical and pneumatic drives with:

- 8 valve slices for up to 16 CPV valves
- Fast and secure contacting to IP65
- CPV10 and CPV14 valve terminals
- Not permitted for CPV10-EX-VI
- High degree of protection IP65/IP67
- Modular design

CPV – The benefits at a glance

The CPV valve terminal is of unique design. It provides the flexible combination of pneumatic performance, electrical connection technologies and a wide range of mounting options.
The generously sized flow ducts and powerful flat plate silencers ensure high flow rates. This means that even comparatively large pneumatic cylinders can be driven with ease.
All valves are in the form of valve slices. They are optimised for flow performance and are also extremely compact. Two functions per valve slice (e.g. 2x 3/2-way valves) mean that twice the component density can be achieved. This saves space and reduces costs.
The cubic design permits exceptional performance yet a comparatively low weight. The benefits of this design are obvious when the valve terminal is used on a moving installation.
However robustness must not be sacrificed in favour of compactness.
The connecting thread and mounting attachments are metallic.
The manual override for the valves can be adapted for different operating situations. If, for example, a detenting manual override is required for setting-up mode, the manual override can be easily converted for that application in a way that rules out operational errors.
The clear, large labelling system also contributes to the safe operation of the valve terminal.
A particular plus is the range of electrical connection technologies supported. All types of valve actuation are possible, from individual valve connections up to bus systems with versatile expansion options. The integration of electrical input and output modules permits cost-effective solutions within the different installation concepts.

The design principle

The cubic design provides a clearly assigned function on each face. Thus, for example, the electrical connection is mounted on the top face.

An optional inscription label holder can be placed on the front of the valve terminal.
The different combination options ensure the optimum solution for the task at hand.

- Compressed air supply connections on the left, right or underneath
- Pneumatic working ports and functional modules (vertical linkage) underneath
- Manual operation/identification on the front
- Electrical connection surface on the top
- Mounting surface at the back or even at the front via a pneumatic multiple connector plate

Overview – CPV valve terminal

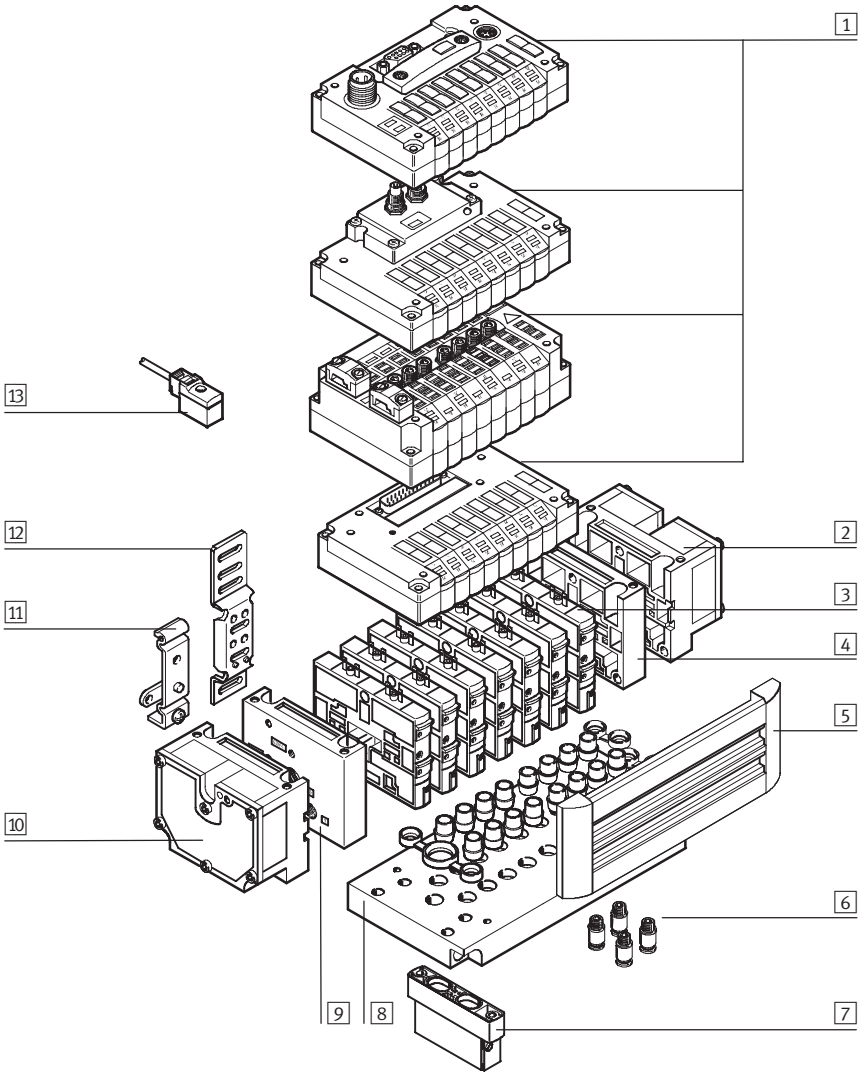

1 Basic electrical unit (Fieldbus Direct, CP/CPI installation system, AS-interface, multi-pin plug, individual connection)
2 Right-hand end plate with flat plate silencer
3 Comprehensive range of valve functions
4 Right-hand end plate (threaded connection not in conjunction with pneumatic multiple connector plate)
5 Holder for inscription label
6 QS push-in fittings
7 Functional module (vertical linkage)
8 Pneumatic multiple connector plate
9 Left-hand end plate (threaded connection not in conjunction with pneumatic multiple connector plate)
10 Left-hand end plate with flat plate silencer
11 H-rail mounting
12 Wall mounting
13 Plug socket with cable for individual connection

Valves

CPV valves are series manifold valves, i.e. in addition to the valve function they contain all of the pneumatic ducts for supply, exhaust and the working lines. The supply ducts are a central component of the valve slices and allow a direct flow of air through the valve slices.
This helps achieve maximum flow rates. All valves have a pneumatic pilot control for optimising performance. The valve function is based on a piston spool system with a patented sealing principle that guarantees its suitability for a wide range of applications as well as a long service life.
The pneumatic components and functions are always identical for all actuator types. Most functions are also available in the various valve sizes (spacing). Restrictions are noted where applicable.

Valve function

Code	Circuit symbol	Size 10	Size 14	Size 18	Description
M	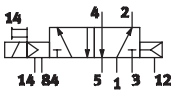	■	■	■	5/2-way valve, single solenoid • Pneumatic spring return • Piston spool valve
MK	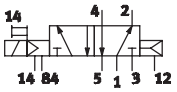	■	■	–	5/2-way valve, single solenoid • With channel separation 1, 11 • Pneumatic spring return • Piston spool valve
F	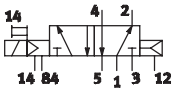	■	–	–	5/2-way valve, single solenoid • Pneumatic spring return • Piston spool valve • Fast switching
J	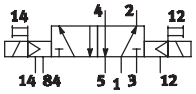	■	■	■	5/2-way valve, double solenoid • Piston spool valve
JK	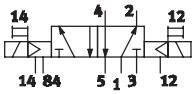	■	■	–	5/2-way valve, double solenoid • With channel separation 1, 11 • Piston spool valve
C	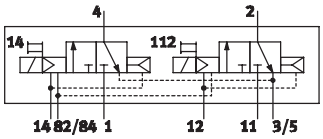	■	■	■	2x 3/2-way valve, single solenoid • Normally closed • Pneumatic spring return • Piston spool valve
CK	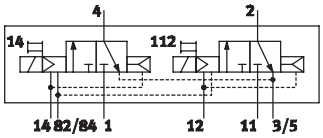	■	■	–	2x 3/2-way valve, single solenoid • With channel separation 1, 11 • Normally closed • Pneumatic spring return • Piston spool valve
CY	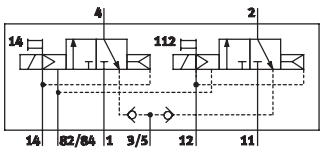	■	–	–	2x 3/2-way valve, single solenoid • Normally closed • Pneumatic spring return • Integrated back pressure protection • Piston spool valve • Not suitable for vacuum Note If it is necessary to ensure that the back pressure flaps are closed securely in the event of a sudden drop in operating pressure or if the operating pressure is switched off, the valve terminal must be operated with external pilot air supply.

Valve function					
Code	Circuit symbol	Size			Description
		10	14	18	
N	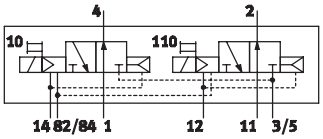	■	■	■	2x 3/2-way valve, single solenoid • Normally open • Pneumatic spring return • The function of a 5/3-way valve in mid-position pressurized can be implemented with these valves in basic position open. • Piston spool valve
NK	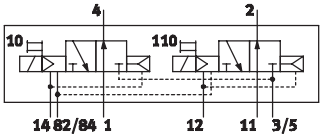	■	■	–	2x 3/2-way valve, single solenoid • With channel separation 1, 11 • Normally open • Pneumatic spring return • The function of a 5/3-way valve in mid-position pressurized can be implemented with these valves in basic position open. • Piston spool valve
H	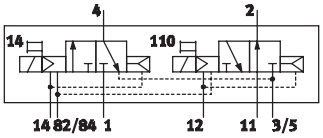	■	■	■	2x 3/2-way valve, single solenoid • Normally 1x open (pilot control 12) 1x closed (pilot control 14) For optimised cylinder movement. Corresponds to valve function M with simultaneous actuation of both solenoid coils (5/2-way, single solenoid). Since the piston area on each side can be pressurised or exhausted separately, it means that the cylinder can move faster. • Pneumatic spring return • Piston spool valve
G	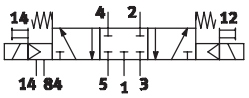	–	–	■	5/3-way valve, mid-position closed • Mechanical spring return • Piston spool valve
	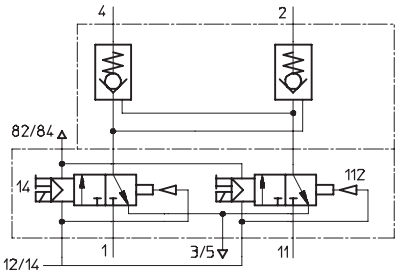	■	■	–	5/3G[1], function, mid-position closed For size 10 and 14 The valve function “mid-position closed” is created from one 2x 3/2-way valve, normally closed (code C). The valve kit CPV10-BS-5/3G-M7 or CPV14-BS-5/3G-⅛ (incorporating a double piloted non-return function) is used for this. This valve kit is intended for applications with one working pressure level per valve slice, i.e. it may not be used in dual-pressure applications (where there are different pressure levels at port 1 and 11). If other valve slices are to be used in dual-pressure mode, then the valve slice equipped with the 5/3G valve kit must be separated from compressed air duct 1 and 11 by means of a separator plate (code T). Not in first or last valve position with pneumatic multiple connector plate. Not used with pneumatic multiple connector plate GQC and GQD. • Piston spool valve

1) Cannot be assembled in conjunction with the control cabinet version of the pneumatic multiple connector plate CPV10-VI-P...-C or CPV10-VI-P...-D

Note

For vacuum operation valves require a filter. This is to avoid that foreign matter is drawn into the valve (e.g. when using a suction cup).

Valve function					
Code	Circuit symbol	Size			Description
		10	14	18	
	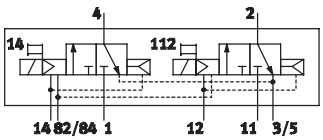	■	■	■	5/3E function, mid-position exhausted The valve function “mid-position exhausted” is created from one 2x 3/2-way valve, normally closed (code C). • Pneumatic spring return • Piston spool valve
	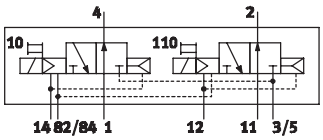	■	■	■	5/3B function, mid-position pressurised The valve function “mid-position pressurised” is created from one 2x 3/2-way valve, normally open (code N). • Pneumatic spring return • Piston spool valve
D	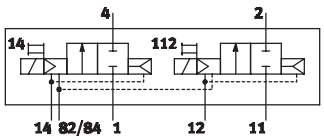	■	■	■	2x 2/2-way valve, single solenoid • Normally closed • Pneumatic spring return • Piston spool valve
DK	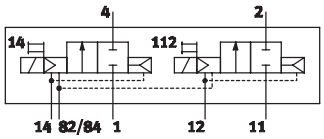	■	■	–	2x 2/2-way valve, single solenoid • With channel separation 1, 11 • Normally closed • Pneumatic spring return • Piston spool valve
I	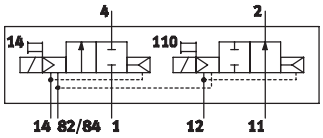	■	■	■	2x 2/2-way valve, single solenoid • Normally 1x open, 1x closed • Control side 14 normally closed • Control side 12 normally open • Pneumatic spring return • Piston spool valve
IK	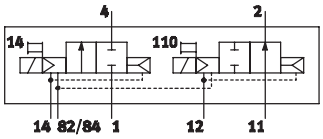	■	■	–	2x 2/2-way valve, single solenoid • With channel separation 1, 11 • Normally 1x open, 1x closed • Control side 14 normally closed • Control side 12 normally open • Pneumatic spring return • Piston spool valve
R	Relay plate (2 floating contacts) 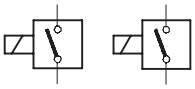	■	■	–	A relay plate (code R) with (normally open contacts) can also be used instead of a valve slice. Each relay plate has two relays for actuating two electrically isolated outputs. Load capacity: 24 V DC, 1 A. • Connecting cable KRP-1-24-... • An inscription label holder cannot be used

Additional pneumatic functions					
Code	Circuit symbol	Size			Description
		10	14	18	
A	Vacuum generators 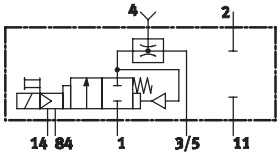	■	■	■	Vacuum generation according to the ejector principle. Vacuum slices of different widths for different suction capacities. Combinations with a number of vacuum slices and/or directional control function slices are possible on the same valve terminal. In principle, an open connection is formed between the exhaust duct 3/5 and the working line 4. When the nozzle is not switched, the resulting back pressure in the exhaust duct flows back into the working line. When the nozzle is switched, the vacuum can be greatly reduced by the resulting back pressure. This effect is improved through optimised exhausting. This effect does not occur where there is only one vacuum generator per valve terminal and where separator plates (code S) are used for separation.
E	Vacuum generator with ejector pulse 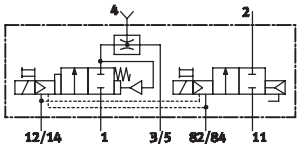	■	■	■	• Vacuum generator on pilot side 14 • Reset via mechanical spring and pneumatic spring • Ejector pulse on pilot side 12 (code E) • Note air supply and exhaust when using more than two vacuum generators
P	2x one-way flow control valve, supply air 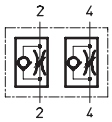	■	■	–	Module (actuator) for direct flange mounting on the CPV valves. Also suitable for pneumatic multiple connector plates. Different valve actuators cannot be combined. • Not with valve function G • Not in first or last valve position with accessories M, P, V (pneumatic multiple connector plate) • Not used with accessories GQC and GQD (pneumatic multiple connector plate)
Q	2x one-way flow control valve, exhaust air 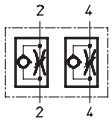	■	■	–	Module (actuator) for direct flange mounting on the CPV valves. Also suitable for pneumatic multiple connector plates. Different valve actuators cannot be combined. • Not with valve function G • Not in first or last valve position with accessories M, P, V (pneumatic multiple connector plate) • Not used with accessories GQC and GQD (pneumatic multiple connector plate)
V	One-way flow control valve for vacuum 	■	■	–	The module CPV-...-BS-GRZ-V-... has a built-in non-return valve as well as a throttle function for adjusting the ejector pulse. The non-return valve serves to temporarily maintain the vacuum, even if the vacuum generator is switched off. The module is suitable for vacuum generators (code A, E). • Not in first or last valve position with accessories M, P, V (pneumatic multiple connector plate) • Not used with accessories GQC and GQD (pneumatic multiple connector plate)

Creating pressure zones

Different pressures at port 1 and 11 result in two pressure levels per valve. This means, for example, that a cylinder drive can be extended with high pressure and retracted with low pressure to save energy.

The maximum number of pressure zones possible is determined by the combination of the following components:

- Use of a separator plate
- End plate pair type
- Valve slice type
- Number of valve slices

With the aid of separator plates or valves with integrated channel separation you can divide the CPV valve terminal into 2 to 4 pressure zones.

Separator plates

Code	Graphic symbol	Size 10	Size 14	Size 18	Note
T	Separator plate (for formation of pressure zones), supply duct 1 separated 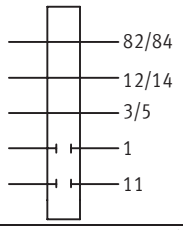	■	■	■	A separator plate (code T) is used to separate the duct for the air supply (port 1 and 11) to provide two pressure zones. • Not in first or last valve position • Not with compressed air supply A, B, C, D, U, V, W, X
S	Separator plate (for formation of pressure zones), supply duct 1 and exhaust 3/5 separated 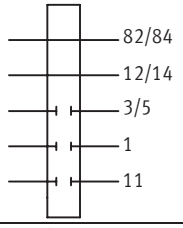	■	■	■	The separator plate (code S) separates the exhaust duct 3/5 as well as the supply duct 1 and 11. This plate should be used if one of the pressure zones is under vacuum to avoid any effects on the vacuum or to prevent backpressure on neighbouring valve functions. • Not in first or last valve position • Not with compressed air supply A, B, C, D, U, V, W, X (single-side compressed air supply)
L	Blanking plate (vacant position) 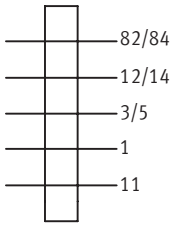	■	■	■	A vacant position is formed by using a blanking plate (code L) whereby a valve can be positioned here at a later date.
MK, JK, CK, NK, DK, IK	Valve with integrated separation of channels 1 and 11 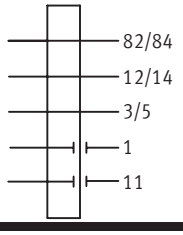	■	■	–	With these valves the channels for the air supply (connections 1 and 11) are closed to the right-hand side of the valve with a cast membrane. The advantage of using this instead of a separator plate is that no valve location is occupied by a separator plate.

Examples: Compressed air supply

External pilot air supply, flat plate silencer at both ends

Compressed air supply via pneumatic multiple connector plate

Code H

The diagram opposite shows an example of the configuration and connection of the compressed air supply with external pilot air supply. Port 12/14 on the pneumatic multiple connector plate is equipped with a fitting for this purpose. Ports 3/5 and 82/84 are vented via the flat plate silencer. One separating seal each can be used optionally to create pressure zones.

Optional separating seal

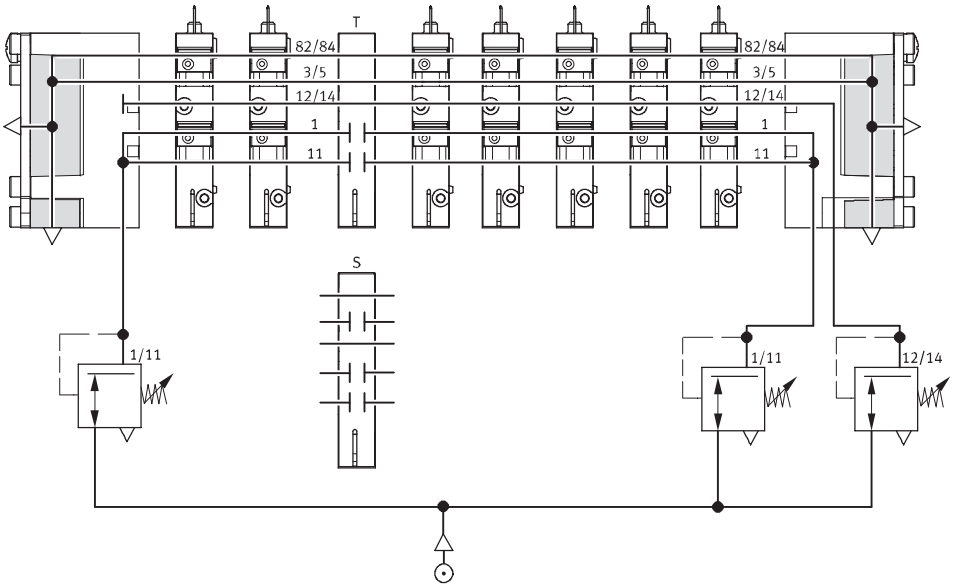

Internal pilot air supply, ducted exhaust air or screw-in silencer

Compressed air supply via end plates:

Code Z

The diagram opposite shows an example of the configuration and connection of the compressed air supply with internal pilot air supply.
Here the pilot air is branched at the right-hand end plate of port 1 or 11.
Ports 3/5 and 82/84 are vented via the screw-in silencer.
One separating seal each can be used optionally to create pressure zones.

Optional separating seal

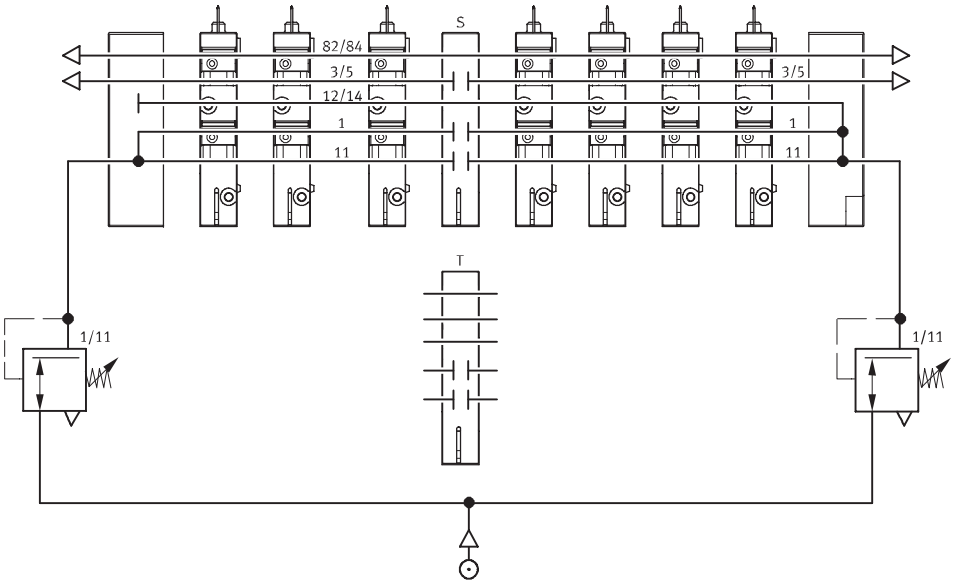

Example: Creation of pressure zones

CPV with separator plate T

The valve terminal CPV facilitates the creation of up to 4 pressure zones. The diagram shows an example of the configuration and connection of four pressure zones using separator plate code T – with external pilot air supply.

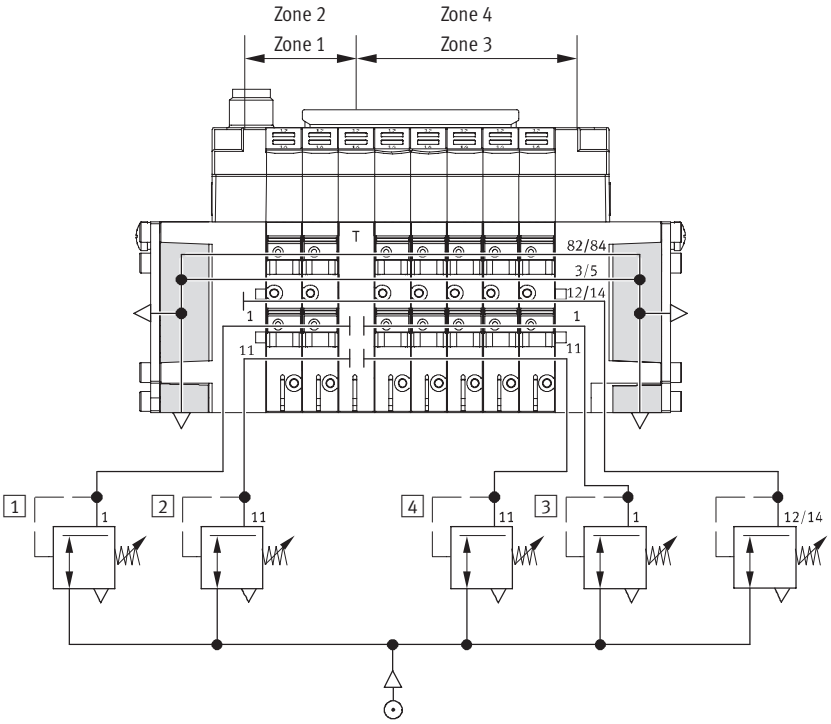

1 Vacuum –0.9 bar
2 Blast pulse 2 bar
3 Forward stroke 6 bar
4 Return stroke 4 bar

CPV with integrated separation of channels 1 and 11 by valves ...K

With the CPV valve terminals up to 4 pressure zones can be implemented. The diagram shows as an example the structure and connection of four pressure zones with external pilot air supply and the use of a valve ...K with integrated separation of channels 1 and 11.

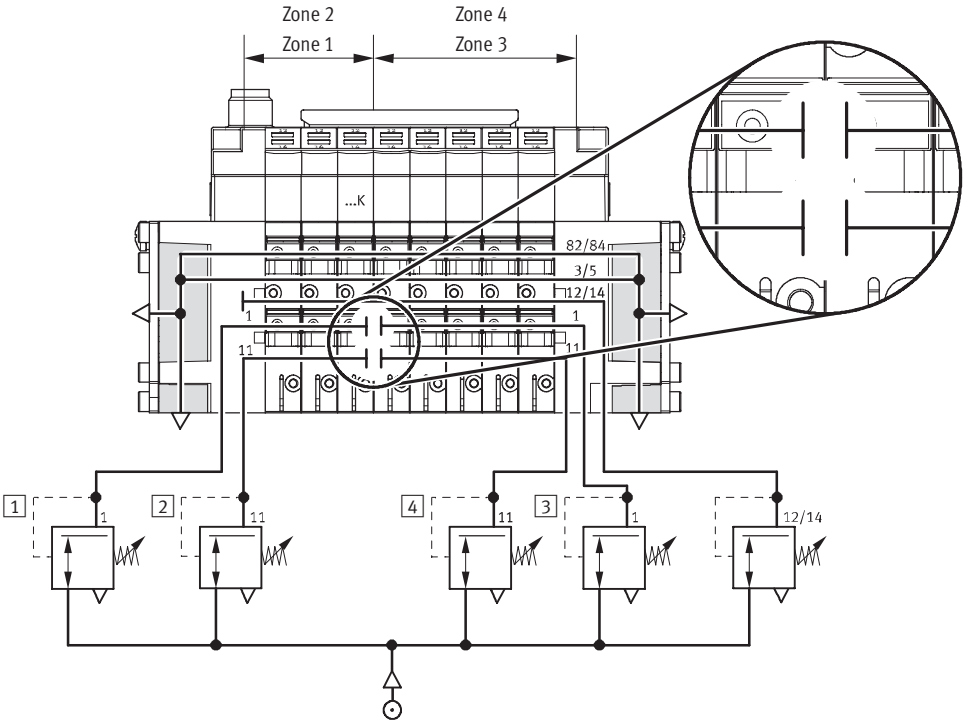

1 Vacuum –0.9 bar
2 Blast pulse 2 bar
3 Forward stroke 6 bar
4 Return stroke 4 bar

Valve terminals type 10 CPV, Compact Performance

Key features – Pneumatic components

Compressed air supply and venting

The two end plates which supply the valve slices with pressure and exhaust are a characteristic feature of a CPV valve terminal.

- Large duct cross sections ensure maximum flow rates even when multiple valves are switched in parallel
- Large surface mounted silencers in the end plates
- Internal/external pilot air supply

Each individual valve is supplied with compressed air from two individual ducts (supply ports 1/11) and exhausted via a large, integrated exhaust duct (exhaust 3/5). This design permits unique flexibility and functionality. It is the easiest way of realising a number of pressure zones per terminal or combinations of vacuum applications.

The valve terminal is supplied via end plates, either on the left, on the right, or on both sides. End plate combinations other than those listed are possible (on request).

Pilot air supply

Internal pilot air supply

An internal pilot air supply can be selected if the supply pressure at pneumatic connection 1 is 3 ... 8 bar. The branch is located in the left or right-hand end plate with an internal pilot air supply. There is no port 12/14.

External pilot air supply

An external pilot air supply is required if the supply pressure at pneumatic connection 1 is less than 3 bar or greater than 8 bar. In this case, pressure of 3 ... 8 bar is applied at port 12/14.

If a gradual pressure build-up in the system using a pressurised on-off valve is required, external pilot supply air should be selected. Here the control pressure applied during switch-on is already very high.
External pilot air supply is also required if it is necessary to ensure that the back pressure flaps (valve order code CY) are closed securely in the event of a sudden drop in operating pressure or if the operating pressure is switched off.

End plates

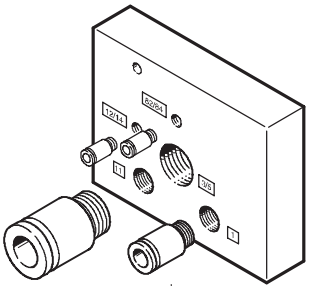

Example of an end plate:
The figure shows a left-hand end plate with external pilot supply air. The exhaust connections 3/5 and 82/84 can be fitted with threaded connections or silencers. An end plate for internal pilot air supply does not have ports 12/14 and 11.

The port 82/84 is always present and should be provided with a silencer.
The port 12/14 is connected internally with port 1 on an end plate for internal pilot air supply.

End plate combination for compressed air supply via end plate					
Code	Graphic symbol Type of pilot air supply (internal/external)	Size			Note
		10	14	18	
U	Internal pilot air supply 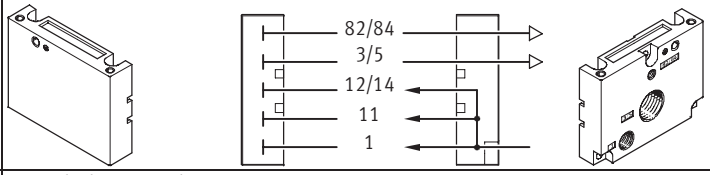	■	■	■	• Ports in right-hand end plate only • No pressure zone separation permissible • Not suitable for vacuum
V	Internal pilot air supply 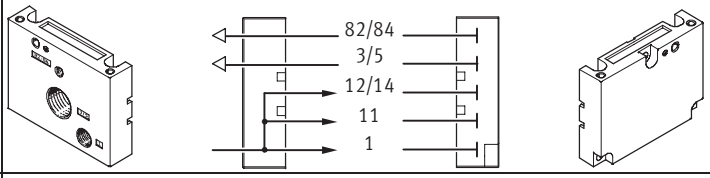	■	■	■	• Ports in left-hand end plate only • No pressure zone separation permissible • Not suitable for vacuum
W	External pilot air supply 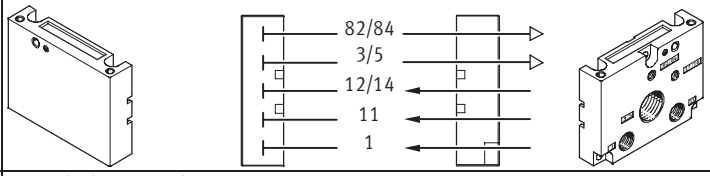	■	■	■	• Ports in right-hand end plate only • No pressure zone separation permissible • Suitable for vacuum
X	External pilot air supply 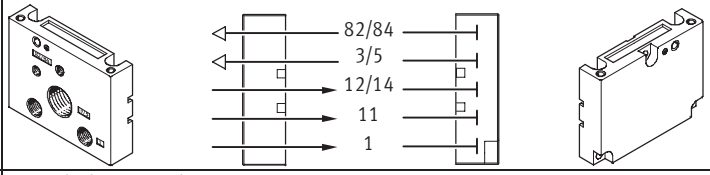	■	■	■	• Ports in left-hand end plate only • No pressure zone separation permissible • Suitable for vacuum
Y	Internal pilot air supply 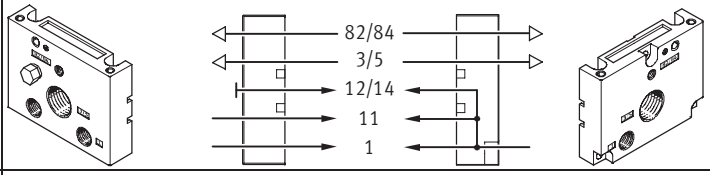	■	■	■	• Ports in left-hand and right-hand end plate • Maximum three pressure zones • Valves to the left of the separator plate suitable for vacuum
Z	External pilot air supply 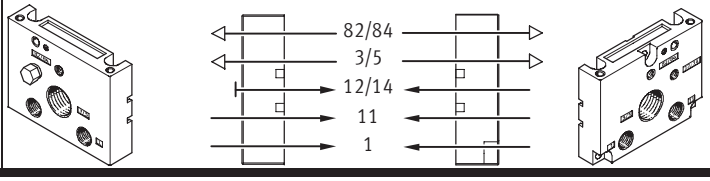	■	■	■	• Ports in left-hand and right-hand end plate • Maximum four pressure zones • Suitable for vacuum

End plate combination for compressed air supply via pneumatic multiple connector plate					
Code	Graphic symbol Type of pilot air supply (internal/external)	Size			Note
		10	14	18	
Y	Internal pilot air supply 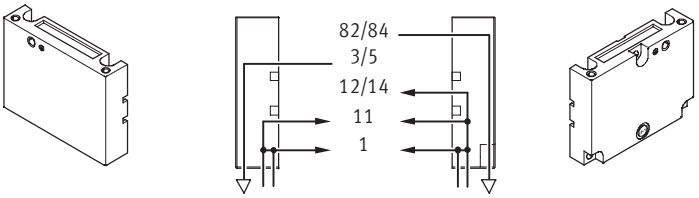	■	■	■	• Ports on pneumatic multiple connector plate • Pressure zone separation only permissible with separator plate (code T) • Maximum two pressure zones • Valves to the left of the separator plate suitable for vacuum • Only for accessories M, P, V, GQC, GQD (pneumatic multiple connector plate)
Z	External pilot air supply 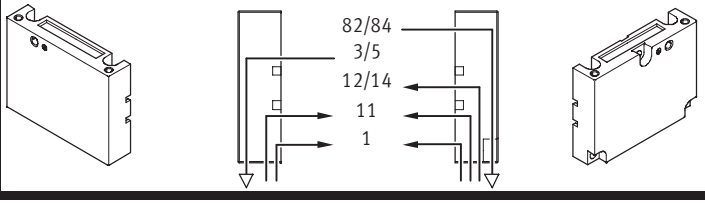	■	■	■	• Ports on pneumatic multiple connector plate • Pressure zone separation only permissible with separator plate (code T) • Maximum three pressure zones • Suitable for vacuum • Only for accessories M, P, V, GQC, GQD (pneumatic multiple connector plate)

End plate combination for compressed air supply via end plates with flat plate silencer					
Code	Graphic symbol Type of pilot air supply (internal/external)	Size			Note
		10	14	18	
A	Internal pilot air supply 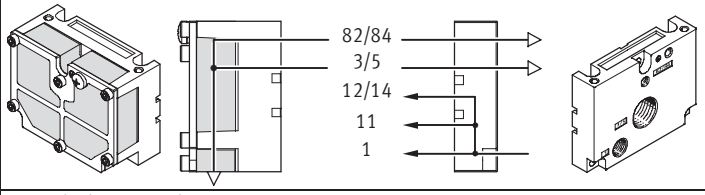	■	■	■	• Ports in right-hand end plate • No pressure zone separation permissible • Not suitable for vacuum
B	Internal pilot air supply 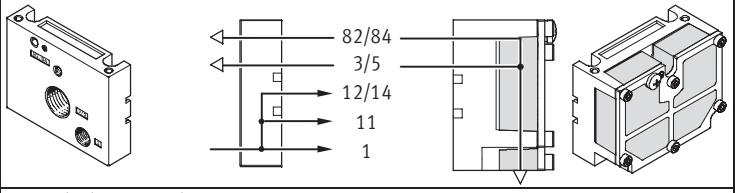	■	■	■	• Ports in left-hand end plate • No pressure zone separation permissible • Not suitable for vacuum
C	External pilot air supply 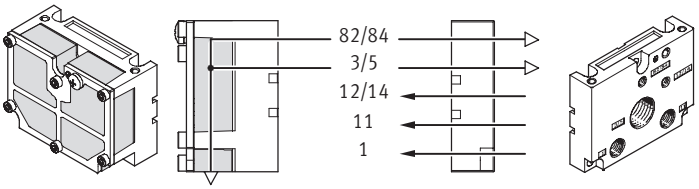	■	■	■	• Ports in right-hand end plate • No pressure zone separation permissible • Suitable for vacuum
D	External pilot air supply 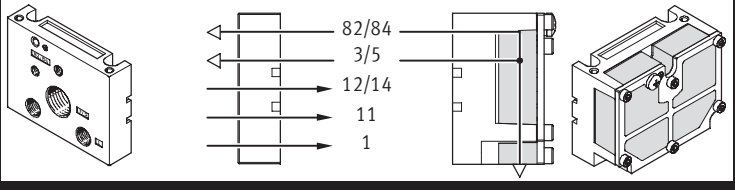	■	■	■	• Ports in left-hand end plate • No pressure zone separation permissible • Suitable for vacuum

End plate combination for compressed air supply via pneumatic multiple connector plate with flat plate silencer					
Code	Graphic symbol Type of pilot air supply (internal/external)	Size			Note
		10	14	18	
E	External pilot air supply 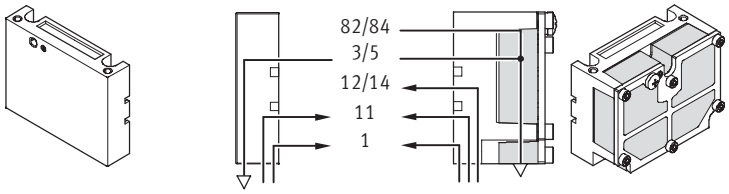	■	■	■	• Ports on pneumatic multiple connector plate • Exhaust air vented via flat plate silencers at right • Pressure zone separation only permissible with separator plate (code T) • Maximum four pressure zones • Suitable for vacuum • Only for accessories M, P, V, GQC, GQD (pneumatic multiple connector plate)
F	External pilot air supply 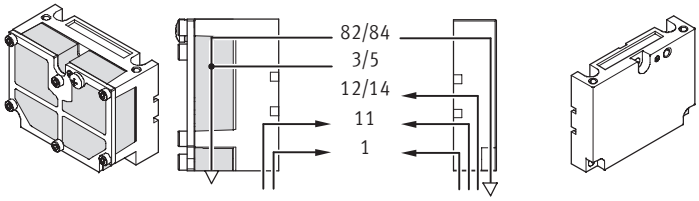	■	■	■	• Ports on pneumatic multiple connector plate • Exhaust air vented via flat plate silencers at left • Pressure zone separation only permissible with separator plate (code T) • Maximum four pressure zones • Suitable for vacuum • Only for accessories M, P, V, GQC, GQD (pneumatic multiple connector plate)
G	Internal pilot air supply 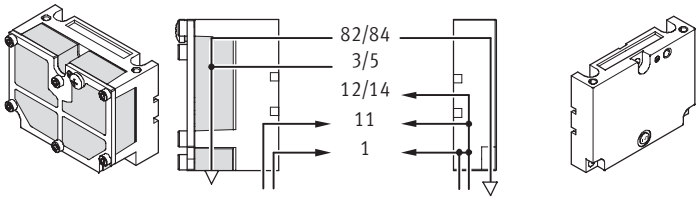	■	■	■	• Ports on pneumatic multiple connector plate • Exhaust air vented via flat plate silencers at left • Pressure zone separation only permissible with separator plate (code T) • Maximum three pressure zones • Not suitable for vacuum • Only for accessories M, P, V, GQC, GQD (pneumatic multiple connector plate)
H	External pilot air supply 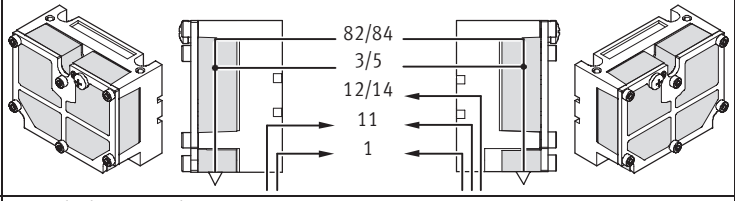	■	■	■	• Ports on pneumatic multiple connector plate • Exhaust air vented via flat plate silencers at both ends • Pressure zone separation permissible • Suitable for vacuum • Only for accessories M, P, V, GQC, GQD (pneumatic multiple connector plate)
J	Internal pilot air supply 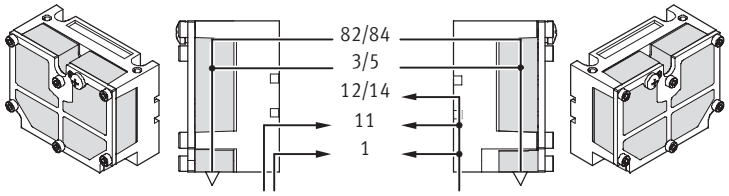	■	■	■	• Ports on pneumatic multiple connector plate • Exhaust air vented via flat plate silencers at both ends • Pressure zone separation permissible • Maximum three pressure zones • Valves to the left of the separator plate suitable for vacuum • Only for accessories M, P, V, GQC, GQD (pneumatic multiple connector plate)
K	Internal pilot air supply 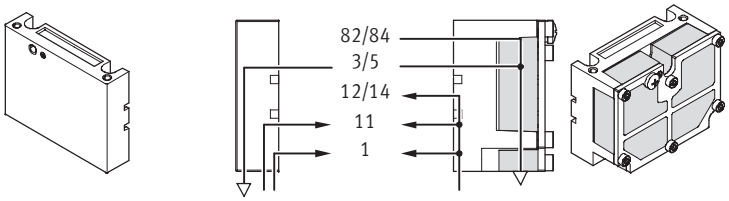	■	■	■	• Ports on pneumatic multiple connector plate • Exhaust air vented via flat plate silencers at right • Pressure zone separation permissible • Maximum three pressure zones • Suitable for vacuum in combination with separator plate • Only for accessories M, P, V, GQC, GQD (pneumatic multiple connector plate)

Pneumatic connection

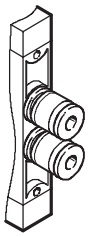

The working lines are located directly in the valve slices. Threaded connections and Quick Star push-in fittings (QS) are available for different tubing sizes. The supply ports are located underneath the valve sub-bases.

Push-in fittings are available fully assembled.
The following working lines can be selected:

- Large push-in fittings: Code A
- Small push-in fittings: Code B
- Threaded connections: Code C

Connection sizes for the threaded and QS push-in fittings can be found in the table below.

Pneumatic multiple connector plate

One-piece "connection plates" that contain both working lines and supply ports are combined in the form of a pneumatic multiple connector plate. These plates enable the valve terminal as a pneumatic "function" to be separated from the valve ports.
The pneumatic multiple connector plate enables different mounting options from wall mounting to direct passage through a cabinet wall.

Service-friendly and flexible connection technology thanks to the following:

- Common connection via the pneumatic multiple connector plate with all connections on one side
- The valve terminal can be removed/fitted using only four screws, whereby the pneumatics remain fully connected
- Quick removal/fitting
- No errors upon recommissioning as a result of incorrect connection of tubing

CPV valve terminal

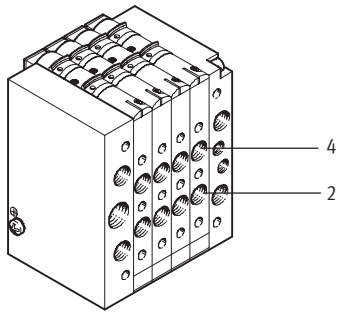

Pneumatic multiple connector plate

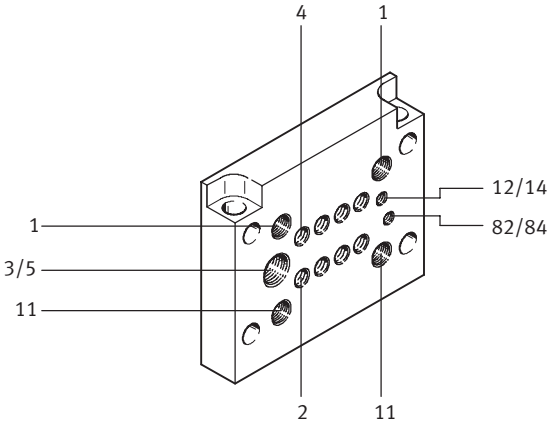

Connection sizes

Connection to ISO 5599		CPV10	CPV14	CPV18	Remarks
1/11	Working air	G⅛	G¼	G⅜	Fitting in end plate or pneumatic multiple connector plate
2/4	Working port	M7 (QS6/QS4)	G⅛ (QS8/QS6)	G¼ (QS10/QS8)	Connection in valve slice, connection for push-in fitting in brackets
3/5	Exhaust air via right-hand/left-hand end plate or pneumatic multiple connector plate	G⅜	G½	G½	For ducted exhaust air
		G¼	G⅜	G½	Pneumatic multiple connector plate
12/14	Pilot air supply port	M5	G⅛	G¼	Fitting in end plate or pneumatic multiple connector plate
82/84	Exhaust air from left-hand/right-hand end plate or pneumatic multiple connector plate	M5	G⅛	G¼	For ducted exhaust air
		M7 (M5)[1)]	G⅛	G¼	Pneumatic multiple connector plate

1) with flanged pneumatic multiple connector plate

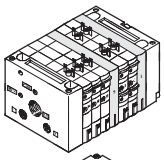

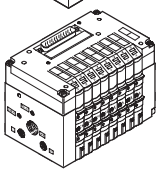

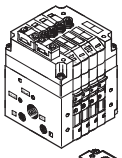

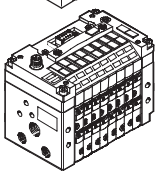

Pneumatic connection: Fitting set for compressed air supply					
Code Compressed air supply	Port	Designation	Size 10 QS6 Type	Size 14 QS8 Type	Size 18 QS10 Type
Without pneumatic multiple connector plate					
U, V	82/84	Silencers	U-M5	U-⅛-B	U-¼-B
	3/5	Silencers	U-⅜-B	U-½-B	U-½-B
	1	Push-in fitting	QS-⅛-8-I	QS-¼-10-I	QS-⅜-12-I
W, X	82/84	Silencers	U-M5	U-⅛-B	U-¼-B
	3/5	Silencers	U-⅜-B	U-½-B	U-½-B
	1	Push-in fitting	QS-⅛-8-I	QS-¼-10-I	QS-⅜-12-I
	12/14	Push-in fitting	QSM-M5-6-I	QS-⅛-8-I	QS-¼-10-I
Y	82/84 on right	Silencers	U-M5	U-⅛-B	U-¼-B
	82/84 on left	Blanking plugs	B-M5	B-⅛	B-¼
	3/5 on right	Silencers	U-⅜-B	U-½-B	U-½-B
	3/5 on left	Blanking plugs	B-⅜	B-½	B-½
	1/11 on left	Push-in fitting	QS-⅛-8-I	QS-¼-10-I	QS-⅜-12-I
Z	82/84 on right	Silencers	U-M5	U-⅛-B	U-¼-B
	82/84 on left	Blanking plugs	B-M5	B-⅛	B-¼
	3/5 on right	Silencers	U-⅜-B	U-½-B	U-½-B
	3/5 on left	Blanking plugs	B-⅜	B-½	B-½
	12/14 on right	Push-in fitting	QSM-M5-6-I	QS-⅛-8-I	QS-¼-10-I
	12/14 on left	Blanking plugs	B-M5	B-⅛	B-¼
	1/11	Push-in fitting	QS-⅛-8-I	QS-¼-10-I	QS-⅜-12-I
With pneumatic multiple connector plate code: M					
Y	82/84	Silencers	UC-M7	U-⅛-B	U-¼-B
	12/14	Blanking plugs	B-M7	B-⅛	B-¼
	3/5	Silencers	U-¼-B	U-⅜-B	U-½-B
	1/11 on left	Push-in fitting	QS-⅛-8-I	QS-¼-10-I	QS-⅜-12-I
	11 on right	Blanking plugs	B-⅛	B-¼	B-⅜
Z	82/84	Silencers	UC-M7	U-⅛-B	U-¼-B
	3/5	Silencers	U-¼-B	U-⅜-B	U-½-B
	12/14	Push-in fitting	QSM-M7-6-I	QS-⅛-8-I	QS-¼-10-I
	1/11 on left	Push-in fitting	QS-⅛-8-I	QS-¼-10-I	QS-⅜-12-I
With pneumatic multiple connector plate code: P, GQC					
Y	82/84	Silencers	U-M5	U-⅛-B	U-¼-B
	12/14	Blanking plugs	B-M5	B-⅛	B-¼
	3/5	Silencers	U-¼-B	U-⅜-B	U-½-B
	1/11 on left	Push-in fitting	QS-⅛-8-I	QS-¼-10-I	QS-⅜-12-I
	11 on right	Blanking plugs	B-⅛	B-¼	B-⅜
Z	82/84	Silencers	U-M5	U-⅛-B	U-¼-B
	3/5	Silencers	U-¼-B	U-⅜-B	U-½-B
	12/14	Push-in fitting	QSM-M5-6-I	QS-⅛-8-I	QS-¼-10-I
	1/11 on left	Push-in fitting	QS-⅛-8-I	QS-¼-10-I	QS-⅜-12-I

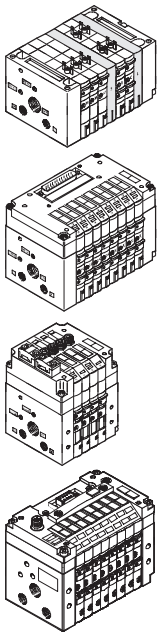

Pneumatic connection: Fitting set for compressed air supply					
Code Compressed air supply	Port	Designation	Size 10 QS6 Type	Size 14 QS8 Type	Size 18 QS10 Type
Without pneumatic multiple connector plate					
A, B	82/84	Blanking plugs	B-M5	B-⅛	B-¼
	3/5	Blanking plugs	B-⅜	B-½	B-½
	1	Push-in fitting	QS-⅛-8-I	QS-¼-10-I	QS-⅜-12-I
C, D	82/84	Blanking plugs	B-M5	B-⅛	B-¼
	3/5	Blanking plugs	B-⅜	B-½	B-½
	1	Push-in fitting	QS-⅛-8-I	QS-¼-10-I	QS-⅜-12-I
	12/14	Push-in fitting	QSM-M5-6-I	QS-⅛-8-I	QS-¼-10-I
With pneumatic multiple connector plate code: M					
E, F, H	82/84	Blanking plugs	B-M7	B-⅛	B-¼
	3/5	Blanking plugs	B-¼	B-⅜	B-½
	1/11	Push-in fitting	QS-⅛-8-I	QS-¼-10-I	QS-⅜-12-I
	12/14	Push-in fitting	QSM-M7-6-I	QS-⅛-8-I	QS-¼-10-I
G, J, K	82/84	Blanking plugs	B-M7	B-⅛	B-¼
	3/5	Blanking plugs	B-¼	B-⅜	B-½
	on right in 1, left	Push-in fitting	QS-⅛-8-I	QS-¼-10-I	QS-⅜-12-I
	on right in 11	Blanking plugs	B-⅛	B-¼	B-⅜
	12/14	Blanking plugs	B-M7	B-⅛	B-¼
With pneumatic multiple connector plate code: P, GQC					
E, F, H	82/84	Blanking plugs	B-M5	B-⅛	B-¼
	3/5	Blanking plugs	B-¼	B-⅜	B-½
	1/11	Push-in fitting	QS-⅛-8-I	QS-¼-10-I	QS-⅜-12-I
	12/14	Push-in fitting	QSM-M5-6-I	QS-⅛-8-I	QS-¼-10-I
G, J, K	82/84	Blanking plugs	B-M5	B-⅛	B-¼
	3/5	Blanking plugs	B-¼	B-⅜	B-½
	on right in 1, left	Push-in fitting	QS-⅛-8-I	QS-¼-10-I	QS-⅜-12-I
	on right in 11	Blanking plugs	B-⅛	B-¼	B-⅜
	12/14	Blanking plugs	B-M5	B-⅛	B-¼

CPV valve terminal size 10 and 14 with valve extensions

Functional modules

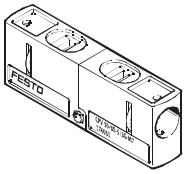

CPV10-BS-5/3G-M7
CPV14-BS-5/3G-⅛

Valve kit 5/3G for creating a 5/3-way function, mid-position closed, for size 10 and 14:
The valve function “mid-position closed” is created from one valve slice with 2x 3/2-way valve, normally closed (valve function code C).
The valve kit CPV10-BS-5/3G-M7 or CPV14-BS-5/3G-⅛ (incorporating a double piloted non-return valve function) is used for this.
This valve kit is intended for applications with one working pressure level per valve slice, i.e. it may not be used in dual-pressure applications (where there are different pressure levels at port 1 and 11).

Additional functions for valve positions

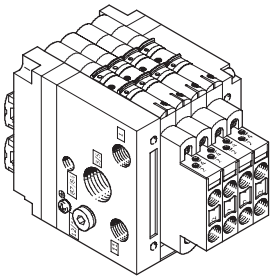

These valve extensions (vertical linkage) can be used to add further pneumatic functions to CPV valve terminals size 10 and 14:

- Two one-way flow control valves for flow regulation directly at the valve terminal for
  - supply air flow control
  - exhaust air flow control
- The vacuum flow control module must be used with the vacuum generator with or without ejector pulse and provides a non-return function and adjustable ejector pulse.

Note

The additional functions cannot be used in the first or last valve position in combination with the pneumatic multiple connector plate.

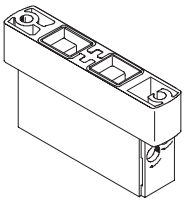

CPV10-BS-2xGRZZ-M7
CPV14-BS-2xGRZZ-⅛

- 2x one-way flow control valve for supply air flow control
- Additional function code P

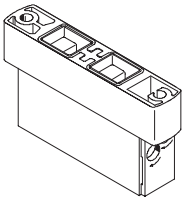

CPV10-BS-2xGRAZ-M7
CPV14-BS-2xGRAZ-⅛

- 2x one-way flow control valve for exhaust air flow control
- Additional function code Q

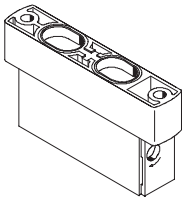

CPV10-BS-GRZ-V-M7
CPV14-BS-GRZ-V-⅛

- Vacuum flow control module
- Additional function code V

Mounting options

The valve terminals have holes for four mounting screws. In this case the mounting side is the side with the pneumatic threaded connectors. These holes are also used to mount the valve terminal on the pneumatic multiple connector plate.

There are other mounting options in addition to this mounting method:

- H-rail mounting
- Wall mounting
- Wall mounting via flanged multiple connector plate
- On rear side via wall mounting
- On head side (CPV10/14 with IC connection only)
- Mounting via through-hole in wall

The attachments are mounted with a screw and fixing bolt on the left-hand and right-hand end plates.

H-rail: Mounting code H

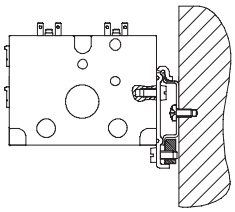

for valve terminal CPV10/14:
CPV10/14-VI-BG-NRH-35
(mounting code H)

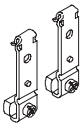

for valve terminal CPV18:
CPV18-VI-BG-NRH-35
(mounting code H)

H-rail to EN 60715, not for accessories M, P, V (pneumatic multiple connector plate)

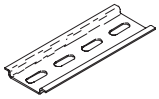

Through-hole in wall, for example on the machine

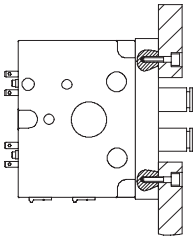

Wall mounting via pneumatic multiple connector plate

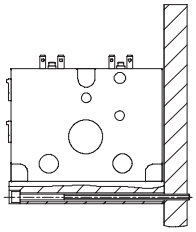

Attachment for wall mounting

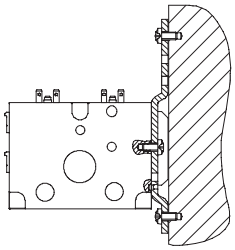

for valve terminal CPV10/14:
CPV10/14-VI-BG-RWL-B
(mounting code U)

for valve terminal CPV18:
CPV18-VI-BG-RW
(mounting code W)

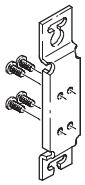

Attachment for individual connection (mounting code X) and ET200X/ET200pro (included in the scope of delivery)

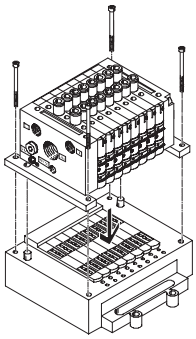

for valve terminal CPV10/14:
CPV...-VI-BG-ET200X

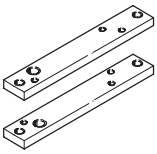

Pneumatic multiple connector plate for wall/machine mounting

with flange, code P

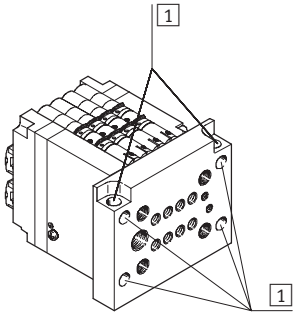

- Multiple connector plate projects past the end plates
- Through mounting holes (without thread) in the flange
- Two additional holes running crossways through this multiple connector plate also allow rear mounting of the CPV valve terminal

1 Mounting holes

without flange, code M

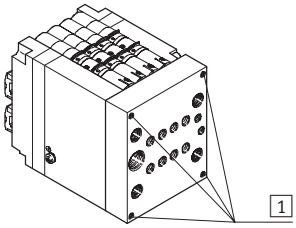

- Multiple connector plate fits flush with the end plates
- Mounting holes (with thread) for wall or foot mounting are on the connection side of the pneumatic multiple connector plate

1 Mounting holes

Pneumatic multiple connector plate for control cabinet assembly

with supply connections, code GQC

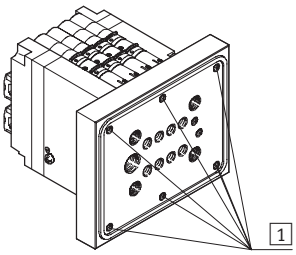

- For 10 mm and 14 mm
- Multiple connector plate projects past the end plates
- Mounting holes (with thread) in the flange
- Multiple connector plate with seal

1 Mounting holes

without supply connections, code GQD

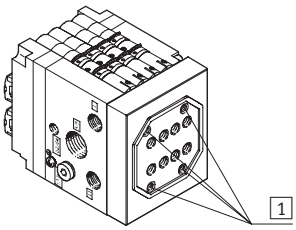

- For 10 mm and 14 mm
- Multiple connector plate fits flush with the end plates
- The mounting holes (with thread) are on the connection side of the pneumatic multiple connector plate
- Multiple connector plate with seal

1 Mounting holes

Note

If the pneumatic multiple connector plate M or P is used, the outer valve modules cannot be equipped with valves with special valve functions (e.g. one-way flow control valves).

In the case of CPV valve terminals with flat plate silencer, only wall mounting is possible.

If the pneumatic multiple connector plate GQC or GQD is used, the following limitations apply:

- Valves with special valve functions cannot be equipped
- No combination with H-rail mounting
- No combination with wall mounting
- Only with 10 mm and 14 mm

Manual override tool

Three types of manual override are available:

- Non-detenting (pushing)
- Detenting
- Blocked

A subsequent conversion of the manual override (MO) from non-detenting to detenting or blocked is possible at any time.

The locking clip on the valve must be removed to this end. This is only possible after the individual valve has been removed or the tie rod of the valve terminal has been released.

Note

See the user documentation for instructions.

Code	Graphic symbol	Size			Note
		10	14	18	
N	Manual override, pushing 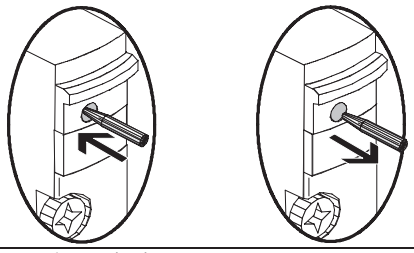	■	■	■	In the “non-detenting” version, the blue slide is held via a locking clip. A pointed object (e.g. pen, etc.) can be used to activate the MO through the opening.
R	Manual override, detenting 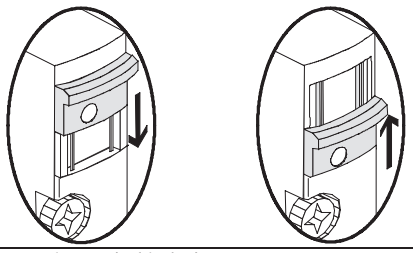	■	■	■	In the “detenting” version, the locking clip is removed and the manual override is activated by pushing the slide down. The non-detenting function can be realised by re-installing the locking clip.
V	Manual override, blocked 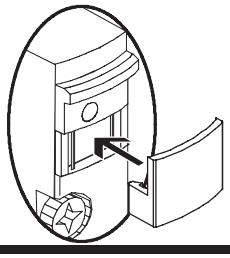	■	■	■	In the “blocked” version, non-detenting and detenting activation of the MO is prevented by means of a cover. Like the push-in locking clip, this cover can be added subsequently, but cannot be detached from the valve once this has been done.

Display and operation

You will find the following LEDs for displaying the switching status on the electrical connections of the CPV valve terminal:

- Display of the switching status of the pilot solenoid coil 12 for output 2
- Display of the switching status of the pilot solenoid coil 14 for output 4
- Readable from the “top” as well as from the “front”

The individual connection has an LED in the connector plug to display the switching status.

Inscription labels

- Clip with inscription field on cable socket (with individual connection)
- Inscription clips on connection node (multi-pin plug, AS-interface, CP installation system, Fieldbus Direct)

CPV valve terminal with individual connection

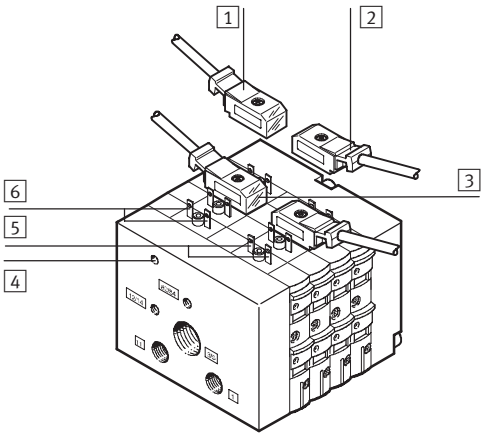

CPV valve terminal with multi-pin plug connection

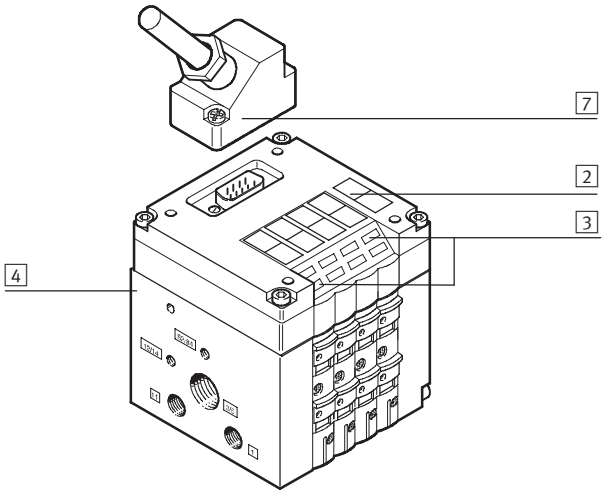

1 Pre-assembled connection socket for each pilot solenoid coil

2 Slot for inscription label (for each connection socket)

3 Yellow LED, signal status display for pilot solenoid coils (for each connection socket)

4 Earth terminal

5 Terminal lug for solenoid coil 14

6 Terminal lug for solenoid coil 12

7 Sub-D multi-pin plug (9-pin for valve terminals with 4 valves, 25-pin for valve terminals with 6 or 8 valves)

Inscription system

Inscription labels can be affixed as follows:

- On the top of the electrical interface unit
- On the inscription label holder

The inscription label holder permits the addition of inscription labels, protects the manual overrides and prevents them from being accidentally activated. The inscription labels are used to record additional information regarding the valves.

The inscription label holders can be ordered together with the valve terminal using the order code. The relevant inscription labels are supplied in a frame and are ordered separately.

Transparent inscription label holder
The transparent inscription label holder CPV...-VI-ST-... offers a further labelling option, for example for large paper labels that can be read from both sides.

The inscription label holder cannot be used together with the relay plate.

Note

The Word templates for CPV label holders can be found at: www.festo.com/en/engineering

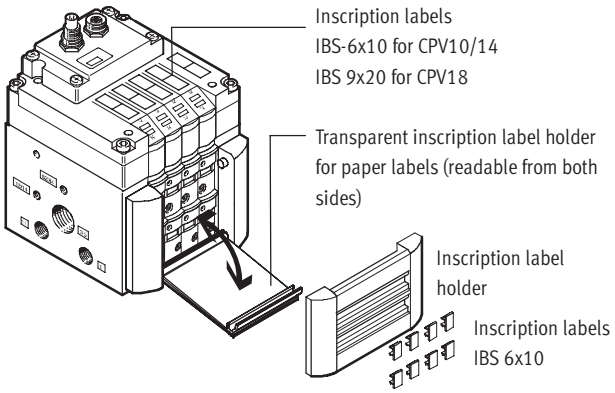

Ordering data

	Code	Designation	Type	Part No.
Inscription label holder				
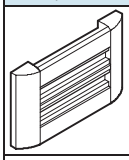	Z	Holder for inscription labels	**CPV...-VI-BZ-T-...**	Dependent on the number of valve positions ➔ 64
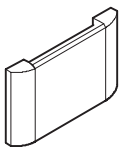	T	Holder for inscription labels, transparent	**CPV...-VI-ST-T-...**	
Inscription labels				
	–	6x10 mm, 64 pieces in frames	**IBS-6x10**	**18 576**
	–	9x20 mm, 20 pieces in frames	**IBS-9x20**	**18 182**

Electrical connection

Contacts which are fitted on the top of the valve slice form the interface for various electrical connection options. The electrical connection is attached from above using a screw. This means that the valve terminal can be adapted to different electrical requirements or fieldbus protocols using the same pneumatic part.

Electrical power

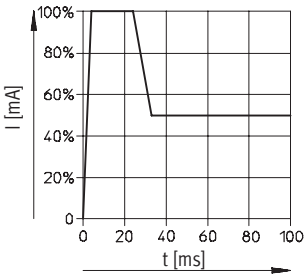

CPV10/14 valves are actuated by means of an integrated current reduction circuit, which reduces power consumption and heat build-up. This current reduction circuit is integrated in the electrical interface unit (multi-pin plug or fieldbus connection) or in the individual connecting cable.
During switch-off, the voltage peaks are limited to 38 V DC.

Individual connection

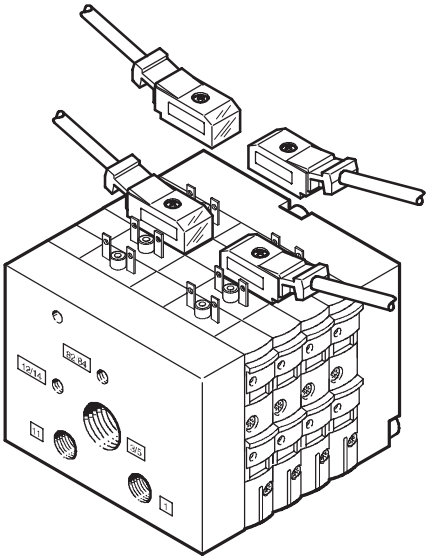

Integration is only carried out in the pneumatic part with individual connection whereby the solenoid valves are connected with individual cables.

Ordering data

	Code	Designation		Type	Part No.
Plug socket with cable for individual connection, electrical, for CPV10/14					
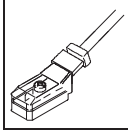	D	Plug socket with cable (suitable for chain link trunking)	2.5 m	**KMYZ-7-24-2,5-LED-PUR**	**193 683**
	E	Plug socket with cable (suitable for chain link trunking)	5 m	**KMYZ-7-24-5-LED-PUR**	**193 685**
	F	Plug socket with cable (suitable for chain link trunking)	10 m	**KMYZ-7-24-10-LED-PUR**	**196 070**
Plug socket with cable for individual connection, electrical, for CPV18					
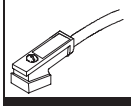	D	Plug socket cable	2.5 m	**KMEB-2-24-2,5-LED**	**174 844**
	E		5 m	**KMEB-2-24-5-LED**	**174 845**

Note

Connecting cables are pre-assembled. They include a protective circuit and an LED indicating the operating status.

Dimensions – Connecting cable for individual connection

Download CAD data ➔ **www.festo.com**

KMYZ-7-24-...

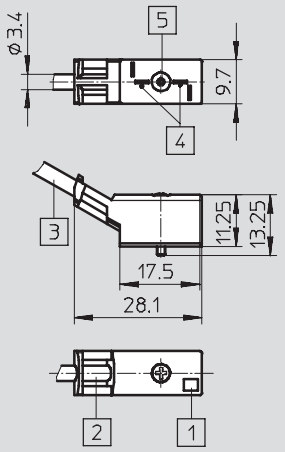

1 LED illuminated area
2 Location for inscription label
3 2-wire cable 2.5 m, 5 m or 10 m (2x 0.25 mm²)
4 Connection pattern for MZC
5 Type of mounting: self-tapping screw, captive, max. tightening torque 0.25 Nm

KMEB-2-24-...-LED

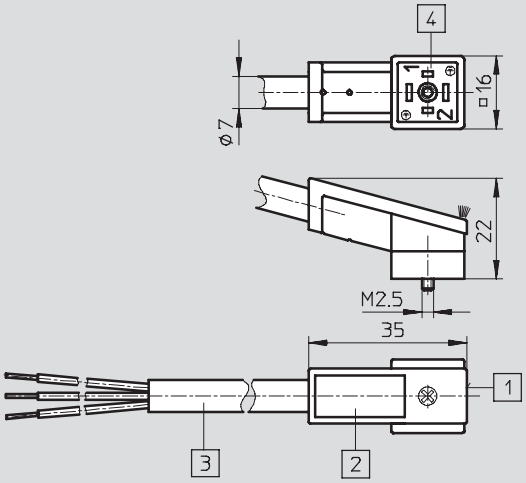

1 LED illuminated area
2 Inscription label IBS-9x20, Part No. 18 182
3 3-wire cable 2.5 or 5 m (3x 0.75 mm²)
4 Connection pattern to DIN 43650 type C

Dimensions – Connecting cable for relay plate

Download CAD data ➔ **www.festo.com**

KRP-1-24-...

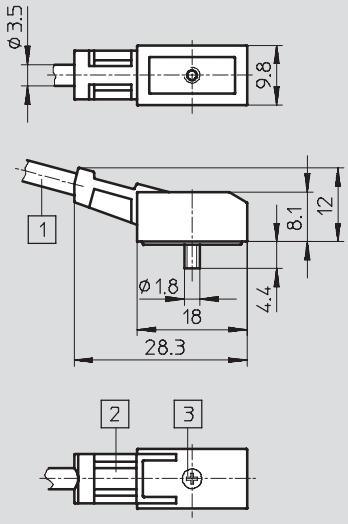

1 Cable 2x 0.25 mm²
2 Location for inscription labels (order code IBS 6x10, Part No. 18 576)
3 Mounting screw (self-tapping KB 1.8x9)

Multi-pin plug connection

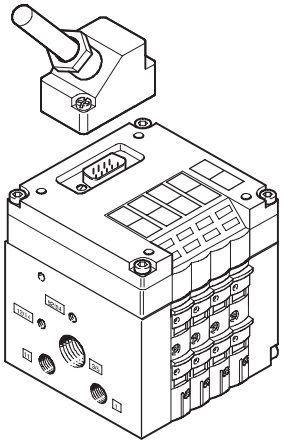

In addition to pneumatic integration, multi-pin plug connection provides integration of the electrical side as well, and facilitates connection to the control cabinet and the valve terminal via a single cable.
Sub-D 9-pin and 25-pin plugs are used for connection. The plug housing of the KMP-...- cable provides the Sub-D connectors with IP65 protection.

The following sizes of plug connector are used:

- 4-fold valve terminal: 9-pin
- 6-fold valve terminal: 25-pin
- 8-fold valve terminal: 25-pin

Pre-assembled connecting cables are available for easy connection. Standard lengths of 5 m and 10 m can be supplied. The pre-assembled connecting cables are also available in a design suitable for chain link trunking.

The cable KMP6-... can alternatively be used for applications with IP40 protection.

Ordering data

	Code	Designation			Type	Part No.
Multi-pin plug cable						
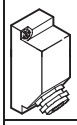	Y	Plug socket (Sub-D plug can be crimped), for self-assembly	9-pin		**SD-SUB-D-BU9**	**18 708**
			25-pin		**SD-SUB-D-BU25**	**18 709**
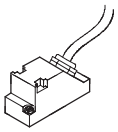	R	Connecting cable, IP65, polyvinyl chloride	9-pin	5 m	**KMP3-9P-08-5**	**18 698**
			25-pin		**KMP3-25P-16-5**	**18 624**
	S		9-pin	10 m	**KMP3-9P-08-10**	**18 579**
			25-pin		**KMP3-25P-16-10**	**18 625**
	–	Connecting cable, IP65, polyurethane (suitable for chain link trunking)	9-pin	5 m	**KMP4-9P-5-PUR**	**193 014**
			25-pin		**KMP4-25P-5-PUR**	**193 018**
	–		9-pin	10 m	**KMP4-9P-10-PUR**	**193 015**
			25-pin		**KMP4-25P-10-PUR**	**193 019**
	–	Connecting cable, IP65, polyvinyl chloride (suitable for chain link trunking)	9-pin	5 m	**KMP4-9P-5-PVC**	**193 012**
			25-pin		**KMP4-25P-5-PVC**	**193 016**
			9-pin	10 m	**KMP4-9P-10-PVC**	**193 013**
			25-pin		**KMP4-25P-10-PVC**	**193 017**
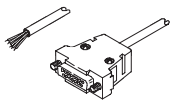	–	Connecting cable, IP40, polyvinyl chloride only for CPV10/14	9-pin	2.5 m	**KMP6-09P-8-2,5**	**531 184**
			25-pin		**KMP6-25P-20-2,5**	**530046**
			9-pin	5 m	**KMP6-09P-8-5**	**531 185**
			25-pin		**KMP6-25P-20-5**	**530 047**
			9-pin	10 m	**KMP6-09P-8-10**	**531 186**
			25-pin		**KMP6-25P-20-10**	**530 048**

Pin allocation – Pre-assembled multi-pin cable (viewed from plug-in direction)

Plug view	Pin	Core color	Valve 24 V DC	
Cable KMP3-25P-16... or KMP4-25P... with 25-pin Sub-D plug for 6-fold and 8-fold valve terminal				
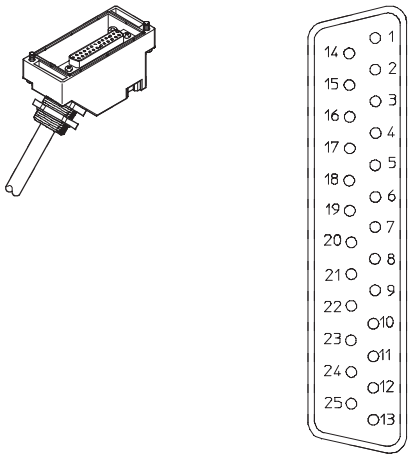	1	White	1	14
	2	Green		12
	3	Yellow	2	14
	4	Grey		12
	5	Pink	3	14
	6	Blue		12
	7	Red	4	14
	8	Purple		12
	9	Grey-pink	5	14
	10	Red-blue		12
	11	White-green	6	14
	12	Brown-green		12
	13	White-yellow	7	14
	14	Yellow-brown		12
	15	White-grey	8	14
	16	Grey-brown		12
	17	White-pink (KMP4 only)		
	18	Pink-brown (KMP4 only)		
	19	White-blue (KMP4 only)		
	20	Brown-blue (KMP4 only)		
	21	White-red (KMP4 only)		
	22	Brown-red (KMP4 only)		
	23	White-black (KMP4 only)		
	24	Brown	(0 V)[1]	
	25	Black	(0 V)[1]	
Cable KMP3-9P... or KMP4-9P... with 9-pin Sub-D plug for 4-fold valve terminal				
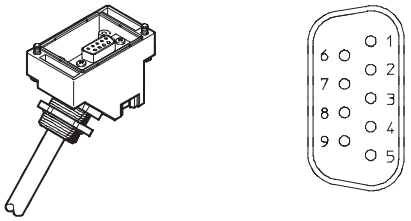	1	White	1	14
	2	Green		12
	3	Yellow	2	14
	4	Grey		12
	5	Pink	3	14
	6	Blue		12
	7	Red	4	14
	8	Purple		12
	9	Black	Common	

1) 0 V for positive switching control signals; connect 24 V for negative switching control signals; mixed operation is not permitted.

Pin allocation – Pre-assembled multi-pin cable (viewed from plug-in direction)

Plug view	Pin	Core color	Valve 24 V DC	
Cable KMP6-25P-20... with 25-pin Sub-D plug for 6-fold and 8-fold valve terminals				
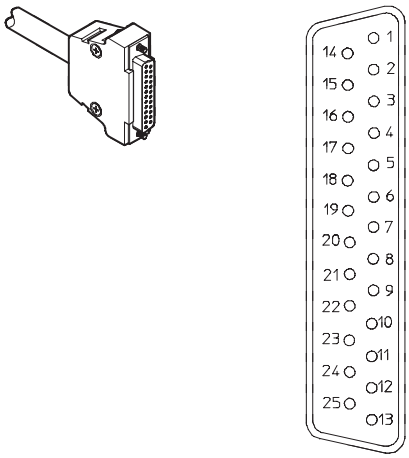	1	White	1	14
	2	Brown		12
	3	Green	2	14
	4	Yellow		12
	5	Grey	3	14
	6	Pink		12
	7	Blue	4	14
	8	Red		12
	9	Black	5	14
	10	Purple		12
	11	Grey-pink	6	14
	12	Red-blue		12
	13	White-green	7	14
	14	Brown-green		12
	15	White-yellow	8	14
	16	Yellow-brown		12
	17	White-grey		
	18	Grey-brown		
	19	White-pink		
	20	Pink-brown		
	21	White-blue[1)]		
	22	Brown-blue[1)]		
	23	White-red[1)]		
	24	Brown-red[1)]	(0 V)[2)]	
	25	White-black[1)]	(0 V)[2)]	
Cable KMP6-9P-20... with 9-pin Sub-D plug for 4-fold valve terminals				
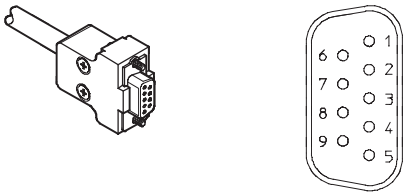	1	White	1	14
	2	Brown		12
	3	Green	2	14
	4	Yellow		12
	5	Grey	3	14
	6	Pink		12
	7	Blue	4	14
	8	Red		12
	9	Black	Common	

1) Wire cross section 0.34 mm^2
2) 0 V for positive switching control signals; connect 24 V for negative switching control signals; mixed operation is not permitted.

Valve terminals type 10 CPV, Compact Performance

Key features – Electrical components

Valve terminal type 10 – AS-interface valve terminal

The AS-interface facilitates the spatial distribution of individual components or small component groups.
The AS-interface connection of valve terminal type 10 can be used to control 2, 4, 8 solenoid coils.
The valve terminal cover contains the LEDs which indicate the operating status and the protective circuit for the valves.

The standard AS-interface protocol permits a maximum of 4 inputs and 4 outputs in one unit. The use of 2 AS-interface slaves in one valve terminal means that 8 inputs and 8 outputs can be controlled in an 8-fold valve terminal (8 solenoid coils).
All CPV valve terminals can be operated using additional functions, e.g. relay plates or vacuum generators.

Valve terminals CPV with inputs are also available for A/B operation to SPEC 2.1 and 3.0.

AS-interface control

- For 2, 4 or 8 valves
- Great variety thanks to the wide range of modules in the system

AS-interface with A/B operation

- For 3 or 4 and/or 6 or 8 valves as per the specification
- All of the benefits of the simple installation system are retained
- 100% more inputs/master
- 50% more outputs/master
- Improved diagnosis of peripheral errors
- More AS-interface functions in Specifications 2.1 and 3.0.

➔ Internet: as-interface

AS-interface valve terminal with auxiliary power supply

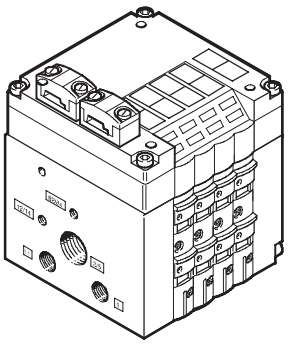

AS-interface valve terminal with auxiliary power supply and inputs

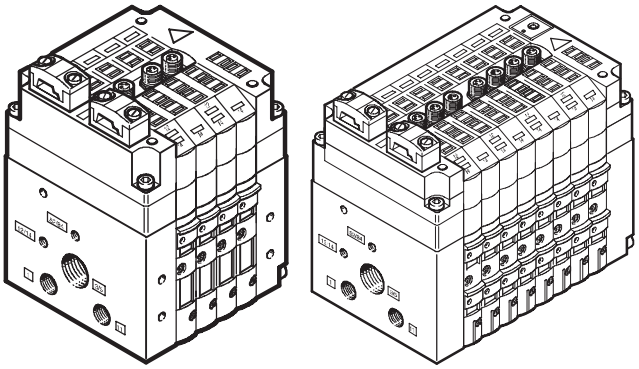

CP/CPI installation system, valve terminal

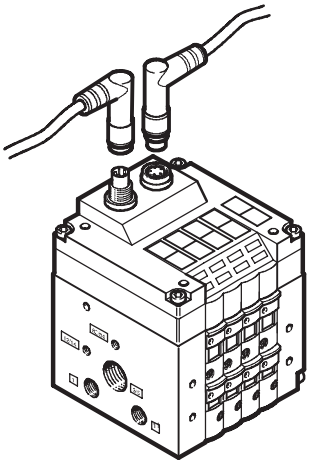

Integration of valve terminal type 10 into a fieldbus system or independent control system is accomplished by connecting the terminals to the corresponding fieldbus node or control block with simple, pre-assembled terminal connectors.

The installation system integrates the valve terminal CPV and various I/O modules, etc. into a single installation concept.

The 5-pin connecting cables carry the supply power and control signals.
The valve terminal cover contains the LEDs which indicate the operating status and the protective circuits for the valves.

- Max. 8 valve slices for up to 16 CPV valves

The CP string is used to exchange the input and output states of the connected modules with the CP fieldbus node.

➔ Internet: ctec

Fieldbus Direct valve terminal

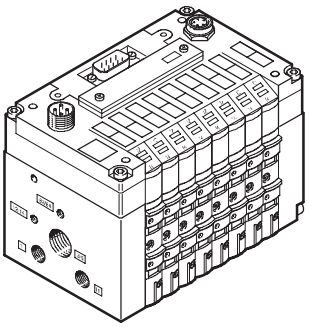

Fieldbus Direct is a system for the connection of one valve terminal to nine different fieldbus standards. The most important systems including Profibus, Interbus, DeviceNet and CANopen are supported.

The CP string extension option allows the functions and components of the CPI installation system to be used.

The optional string extension allows additional valve terminals and I/O modules with CP/CPI function to be connected to the Fieldbus Direct fieldbus node.

The valve terminals are available in all three sizes, 10, 14 and 18 mm, each with 8 valve slices.

ET200X pneumatic interface for CPV10 and CPV14

Adaptation of CPV valve terminal to Siemens ET200X/ET200pro I/O module. The combination of the ET200X/ET200pro functional modules and the pneumatic functions of the CPV valve terminal provides a highly integrateable automation solution for systems using electrical and pneumatic drives with:

- 8 valve slices for up to 16 CPV valves
- Faster and more reliable contacting
- CPV 10 and CPV 14 valve terminals
- High degree of protection IP65/IP67
- Modular design
- Large number of I/O modules
  - digital I/O
  - analogue I/O
  - supply branching for activation of AC motors
- PROFIBUS DP interface

Mounting kit for ET200X CPV-...-VI-BG-ET200X (included in the scope of delivery)

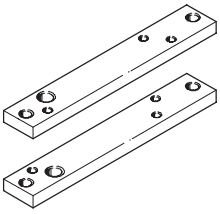

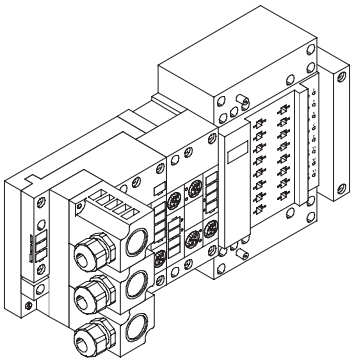

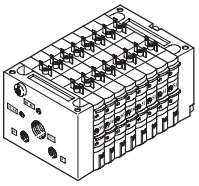

Specific data on the ET200X/ET200pro pneumatic interface can be found in Siemens product catalogues.

Note

A moulded seal is required for the valve terminal CPV10-ET200pro in order to achieve the IP protection class.

The moulded seal CPV10-...-GE-8 or CPV14-...-GE-8 must be ordered separately.

Equipment

Operate your equipment with unlubricated compressed air if possible. Festo valves and cylinders are designed for operation under normal use without any additional lubrication yet still maintain a long service life. The quality of compressed air downstream from the compressor must correspond to that of unlubricated compressed air. If possible, do not operate all of your equipment with lubricated compressed air. The lubricators should, where possible, always be installed directly upstream of the relevant actuator.

Incorrect additional oil and too high an oil content in the compressed air reduce the service life of the valve terminal.
Use Festo special oil OFSW-32 or the alternatives listed in the Festo catalogue (as specified in DIN 51524 HLP32; basic oil viscosity 32 CST at 40 °C).

Bio-oils
When using bio-oils (oils which are based upon synthetic or native ester, e.g. rapeseed oil methyl ester), the maximum residual oil content of 0.1 mg/m^3 must not be exceeded (see ISO 8573-1 Class 2).

Mineral oils
When using mineral oils (e.g. HLP oils to DIN 51524, parts 1 through 3) or similar oils based on poly-alpha-olefins (PAO), the maximum residual oil content of 5 mg/m^3 must not be exceeded (see ISO 8573-1 Class 4).
A higher residual oil content irrespective of the compressor oil cannot be permitted, as the basic lubricant would be flushed out over time.

Valve terminals type 10 CPV, Compact Performance

Technical data

Flow rates
CPV10: 400 l/min
CPV14: 800 l/min
CPV18: 1,600 l/min

Valve width
CPV10: 10 mm
CPV14: 14 mm
CPV18: 18 mm

Voltage
24 V DC

General technical data				
		CPV10	CPV14	CPV18
Design		Electromagnetically actuated piston spool valve		
Lubrication		Life-time lubrication, PWIS-free (free of paint-wetting impairment substances)		
Type of mounting		Via pneumatic multiple connector plate		
		Via backwall		
		On H-rail		
Assembly position		Any		
Manual override		Non-detenting/detenting/blocked		
Width	[mm]	10	14	18
Nominal size	[mm]	4	6	8
Nominal flow rate without fitting	[l/min]	400	800	1,600
Pneumatic connections[1)]				
Pneumatic connection		Via end plate		
Supply port	1/11	G⅛	G¼	G⅜
Exhaust port	3/5	G⅜ (G¼)	G½ (G⅜)	G½
Working ports	2/4	M7	G⅛	G¼
Pilot air supply port	12/14	M5 (M7)	G¼	G¼
Pilot exhaust air port	82/84	M5 (M7)	G⅛	G¼

1) Connection dimensions in brackets for pneumatic multiple connector plate

Operating and environmental conditions													
Valve function order code		M	F	J	N	C	CY	H	G	D	I	A	E
Operating medium		Filtered compressed air, lubricated or unlubricated, inert gases ➔ 36											
Grade of filtration	[µm]	40 (average pore size)											
Operating pressure	[bar]	−0.9 … +10					+0.1 … +10	−0.9 … +10					
Operating pressure for valve terminal with internal pilot air supply	[bar]	3 … 8											
Pilot pressure	[bar]	3 … 8											
Ambient temperature	[°C]	−5 … +50 (vacuum generators: 0 … +50)											
Temperature of medium	[°C]	−5 … +50 (vacuum generators: 0 … +50)											
Storage temperature	[°C]	−20 … +40											
Relative air humidity at 25 °C	[%]	95 with no condensation											
Corrosion resistance class CRC[1)]		2										1	
Note on materials		Conforms to RoHS											

1) Corrosion resistance class 1 as per Festo standard 940 070
Components requiring low corrosion resistance. Transport and storage protection. Parts that do not have primarily decorative surface requirements, e.g. in internal areas that are not visible or behind covers.
Corrosion resistance class 2 as per Festo standard 940 070
Components subject to moderate corrosion stress. Externally visible parts with primarily decorative surface requirements which are in direct contact with a normal industrial environment or media such as coolants or lubricating agents.

Valve response times [ms]													
Valve function order code		M	F	J	N	C	CY	H	G	D	I	A	E
CPV10													
Switching times	on	17	13	–	17	17	17	17	20	15	15	–	15
	off	27	17	–	25	25	25	25	30	17	17	–	17
	change-over	–	–	10	–	–	–	–	–	–	–	–	–
CPV14													
Switching times	on	25	–	–	24	24	–	24	22	13	13	–	13
	off	35	–	–	30	30	–	30	30	16	16	–	16
	change-over	–	–	12	–	–	–	–	–	–	–	–	–
CPV18													
Switching times	on	18	–	–	18	18	–	18	14	14	14	–	14
	off	26	–	–	24	24	–	24	32	20	20	–	20
	change-over	–	–	12	–	–	–	–	–	–	–	–	–

Electrical data				
		CPV10	CPV14	CPV18
Design		Electromagnetically actuated piston spool valve		
Operating voltage	[V DC]	24 (+10/–15%)		
Edge steepness (IC and MP only)	[V/ms]	> 0.4 minimum voltage increase time to reach the high-current phase		
Limitation of the voltage peaks when switching off	[V DC]	38		
Residual ripple	[Vss]	4		
Electrical power consumption	[W]	0.6 (0.45 at 21 V); (with CPV10-M11H-... 0.65)	0.9 (0.65 at 21 V)	1.5 (0.95 at 21 V)
Duty cycle	[%]	100%		
With pilot air supply	[bar]	–0.9 ... +10		
Protection against electric shock (protection against direct and indirect contact to EN 60204-1/IEC 204)		By means of PELV power supply unit		
ATEX category gas		Ex nA II T4 X		
ATEX category dust		Ex tD A22 IP54 T110°C X		
ATEX ambient temperature	[°C]	–5 ≤ Ta ≤ +50		
ATEX certification as per NEC 500		Class I, Division 2, Groups A, B, C and D		
CE mark (see declaration of conformity)		To EU EMC directive		
		In accordance with EU explosion protection directive (ATEX)		
Protection class to EN 60529		IP65 (for all types of signal transmission in assembled state)		

Relay plate				
		CPV10	CPV14	CPV18
Operating voltage	[V DC]	20.4 ... 26.4		–
Electrical power consumption	[W]	1.2		–
No. of relays		2 with galvanically isolated outputs		–
Load current circuit		Each 1 A/24 V DC +10%		–
Relay response times	on	5 ms		–
	off	2 ms		–

Materials			
	CPV10	CPV14	CPV18
Design	Electromagnetically actuated piston spool valve	Electromagnetically actuated piston spool valve	Electromagnetically actuated piston spool valve
Basic electrical unit	Die-cast aluminium, polyamide, nitrile rubber		
Valve slices	Die-cast aluminium		
Valve module 5/3G	Cast aluminium, polyacetate		
Relay plate	Polyamide, brass		
Blanking plate/separator plate	Polyamide		
End plates	Die-cast aluminium		
Flat plate silencer	Die-cast aluminium, polyethylene		
Pneumatic multiple connector plate	Wrought aluminium alloy		
Inscription label holder	Polyacetate, polyvinyl chloride		
Seal	Nitrile rubber, hydrogenated nitrile rubber		

Product weight			
Approx. weights [g]	CPV10	CPV14	CPV18
Design	Electromagnetically actuated piston spool valve	Electromagnetically actuated piston spool valve	Electromagnetically actuated piston spool valve
Electrical connection plates with AS-i connection			
• on CP valve terminals with 2 valve positions	85	130	275
• on CP valve terminals with 4 valve positions	110	175	355
• on CP valve terminals with 8 valve positions	400	460	–
Electrical connection plates with CP connection			
• on CP valve terminals with 4 valve positions	145	230	375
• on CP valve terminals with 6 valve positions	180	250	450
• on CP valve terminals with 8 valve positions	200	300	540
Electrical connection plates with MP connection			
• on CP valve terminals with 4 valve positions	110	170	400
• on CP valve terminals with 6 valve positions	140	230	425
• on CP valve terminals with 8 valve positions	165	275	515
End plates (2 pieces)	160	280	740
Pneumatic multiple connector plate			
• on CP valve terminals with 2 valve positions	120	270	520
• on CP valve terminals with 4 valve positions	165	390	750
• on CP valve terminals with 6 valve positions	225	510	870
• on CP valve terminals with 8 valve positions	270	630	1300
Flat plate silencer	147	234	–
Relay plate	35	55	–
Blanking plate	25	45	90
Separator plate	25	45	90
Valve sub-bases, vacuum generators	65	110	260
Functional module: 5/3G function	46	105	–
Functional module: One-way flow control valves	25	54	125

Vacuum generators

Vacuum as a function of operating pressure

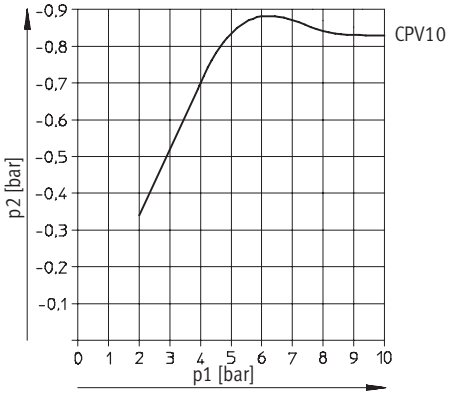

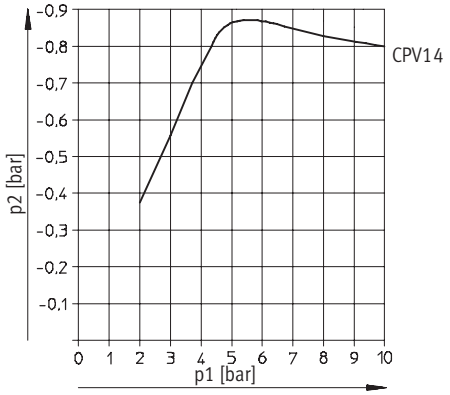

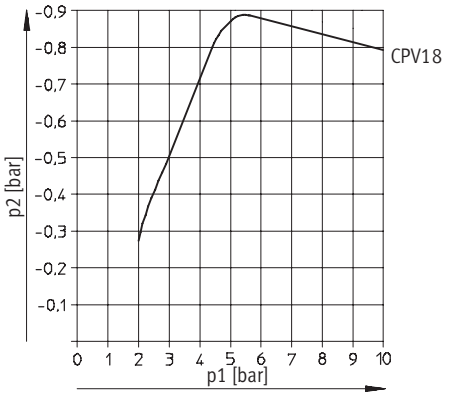

Air consumption as a function of operating pressure

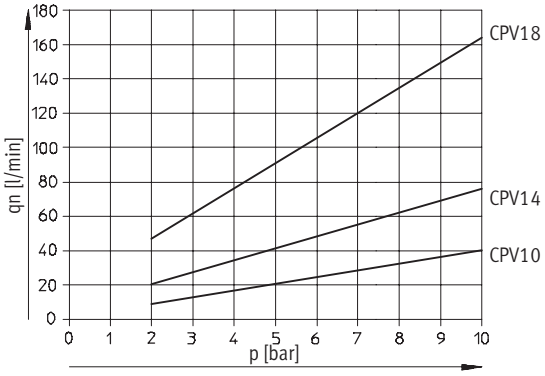

Evacuation time for a volume of 1 litre at $P_{nominal}$

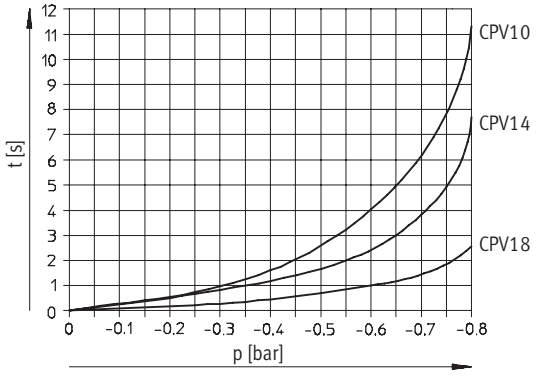

Suction capacity as a function of partial vacuum at $P_{nominal}$

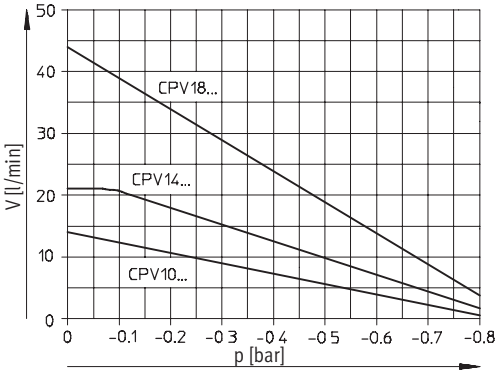

Dimensions Download CAD data ➔ **www.festo.com**

Valve terminal with individual connections – CPV10/14/18

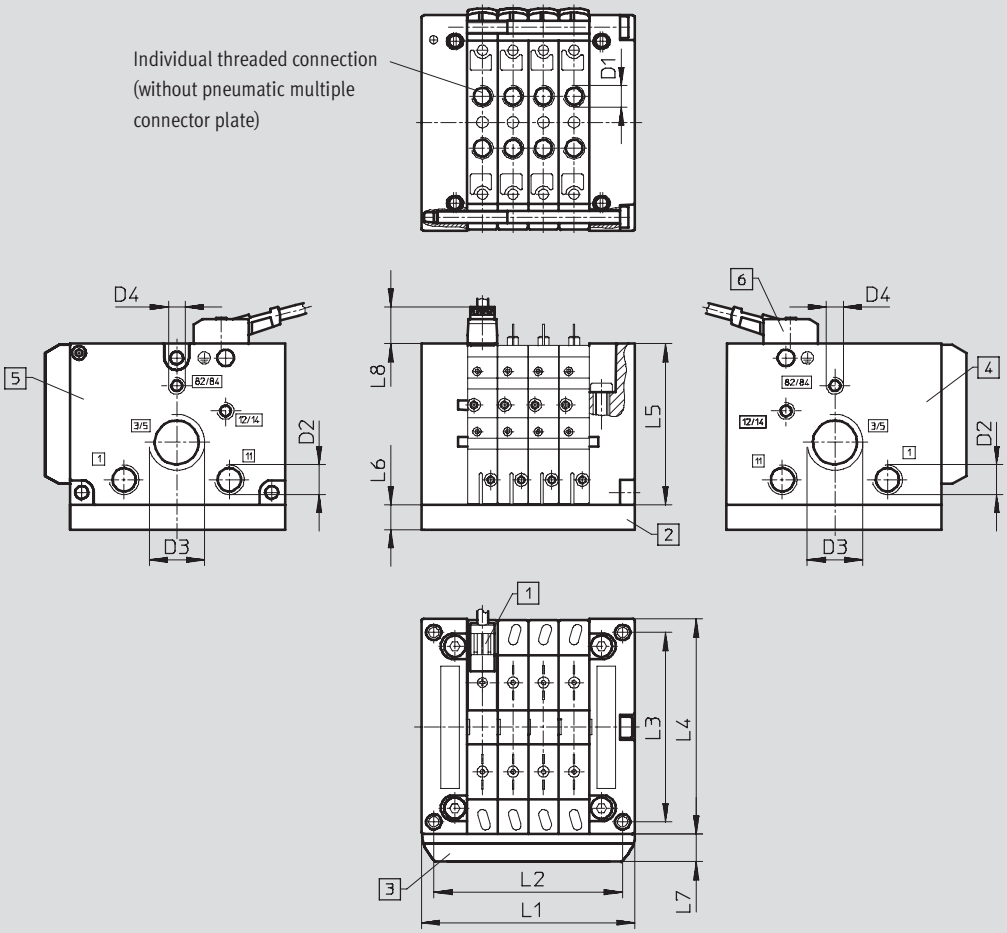

1 Slots for inscription labels
2 Pneumatic multiple connector plate
3 Inscription label holder (CPV10/14/18-VI-BZ-T-... or CPV10/14/18-VI-ST-T-...)
4 Left-hand end plate (threaded connection not in conjunction with pneumatic multiple connector plate)
5 Right-hand end plate (threaded connection not in conjunction with pneumatic multiple connector plate)
6 Plug socket with cable KMYZ-7-... for CPV10/14 KMEB-2-... for CPV18

Valve terminals type 10 CPV, Compact Performance

Technical data

		L1	L2	L3	L4	L5	L6	L7	L8	D1	D2	D3	D4
CPV10	2-fold	50	41.8	62	71	52.8	15	9.5	11.8	M7	G⅛	G⅜	M5
	3-fold	60	51.8										
	4-fold	70	61.8										
	5-fold	80	71.8										
	6-fold	90	81.8										
	7-fold	100	91.8										
	8-fold	110	101.8										
CPV14	2-fold	68	58	78	89	58.8	20	9.5	11.8	G⅛	G¼	G½	G⅛
	3-fold	82	72										
	4-fold	96	86										
	5-fold	110	100										
	6-fold	124	114										
	7-fold	138	128										
	8-fold	152	142										
CPV18	2-fold	96	85.5	106.5	118	73	20	9.5	21.6	G¼	G⅜	G½	G¼
	3-fold	114	103.5										
	4-fold	132	121.5										
	5-fold	150	139.5										
	6-fold	168	157.5										
	7-fold	186	175.5										
	8-fold	204	193.5										

Dimensions Download CAD data ➔ **www.festo.com**

Valve terminal with individual connections and flat plate silencers – CPV10/14/18

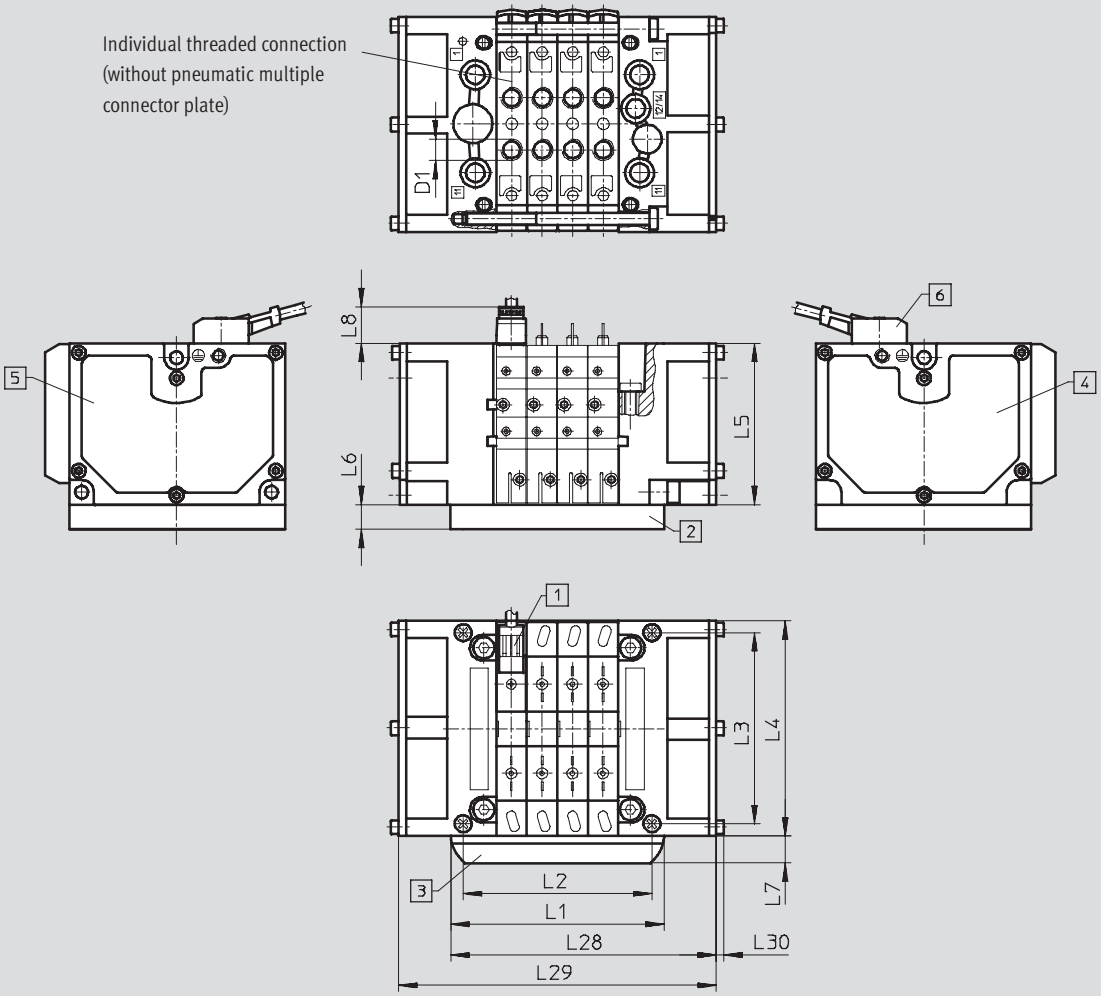

1 Slots for inscription labels
2 Pneumatic multiple connector plate
3 Inscription label holder (CPV10/14/18-VI-BZ-T-... or CPV10/14/18-VI-ST-T-...)
4 Left-hand flat plate silencer
5 Right-hand flat plate silencer
6 Plug socket with cable KMYZ-7-... for CPV10/14 KMBE-2-... for CPV18

Valve terminals type 10 CPV, Compact Performance

Technical data

		L1	L2	L3	L4	L5	L6	L7	L8	L28	L29	L30	D1
CPV10	2-fold	50	41.8	62	71	52.8	15	9.5	11.8	67	84	2.5	M7
	3-fold	60	51.8							77	94		
	4-fold	70	61.8							87	104		
	5-fold	80	71.8							97	114		
	6-fold	90	81.8							107	124		
	7-fold	100	91.8							117	134		
	8-fold	110	101.8							127	144		
CPV14	2-fold	68	58	78	89	58.8	20	9.5	11.8	85	102	3	G⅛
	3-fold	82	72							99	116		
	4-fold	96	86							113	130		
	5-fold	110	100							127	144		
	6-fold	124	114							141	158		
	7-fold	138	128							155	172		
	8-fold	152	142							169	186		
CPV18	2-fold	96	85.5	106.5	118	73	20	9.5	21.6	127	158	4.55	G¼
	3-fold	114	105.5							145	176		
	4-fold	132	121.5							163	194		
	5-fold	150	139.5							181	212		
	6-fold	168	157.5							199	230		
	7-fold	186	175.5							217	248		
	8-fold	204	193.5							235	266		

Dimensions Download CAD data ➔ **www.festo.com**

Valve terminal with multi-pin plug connection – CPV10/14/18

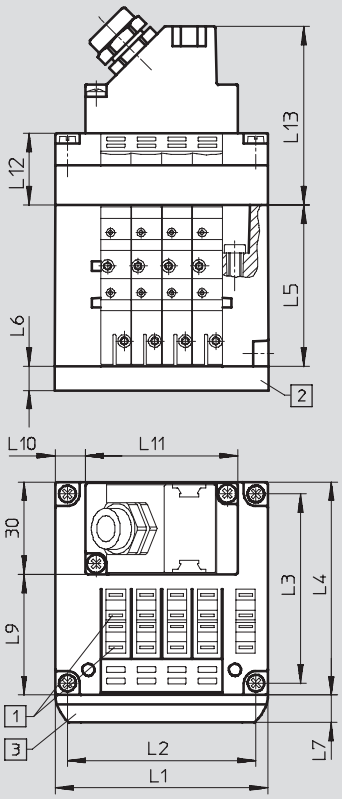

1 Slots for inscription labels

2 Pneumatic multiple connector plate

3 Inscription label holder (CPV10/14/18-VI-BZ-T-... or CPV10/14/18-VI-ST-T-...)

		L1	L2	L3	L4	L5	L6	L7	L9	L10	L11	L12	L13
CPV10	4-fold	70	61.8	62	71	52.8	15	9.5	39.5	10	50	23.5	58.8
	6-fold	90	81.8							10	70		
	8-fold	110	101.8							20	70		
CPV14	4-fold	96	86	78	89	58.8	20	9.5	61.8	23	50	23.5	58.8
	6-fold	124	114							27	70		
	8-fold	152	142							41	70		
CPV18	4-fold	132	121.5	106.5	118	73	20	9.5	88.4	41	50	28	63
	6-fold	168	157.5							49	70		
	8-fold	204	193.5							67	70		

Dimensions Download CAD data ➔ **www.festo.com**

Valve terminal with AS-interface connection – CPV10/14/18

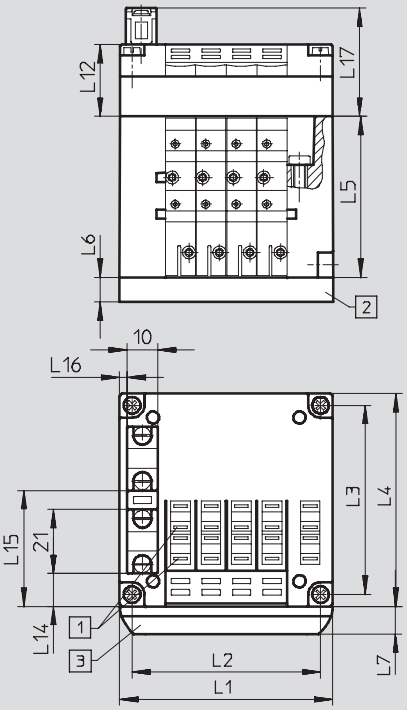

1 Slots for inscription labels

2 Pneumatic multiple connector plate

3 Inscription label holder (CPV10/14/18-VI-BZ-T-... or CPV10/14/18-VI-ST-T-...)

		L1	L2	L3	L4	L5	L6	L7	L12	L14	L15	L16	L17
CPV10	2-fold	50	41.8	62	71	52.8	15	9.5	–	10.9	38.1	2.5	35.5
	4-fold	70	61.8						23.5				
	8-fold	110	101.8							–	–	–	–
CPV14	2-fold	68	58	78	89	58.8	20	9.5	–	14	52	5	35.5
	4-fold	96	86						23.5				
	8-fold	152	142							–	–	–	–
CPV18	2-fold	96	85.5	106.5	118	73	20	9.5	–	27.4	68.2	10.4	40
	4-fold	132	121.5						28				
	8-fold	204	193.5							–	–	–	–

Dimensions Download CAD data ➔ **www.festo.com**

Valve terminal with AS-interface connection and additional inputs – CPV10/14

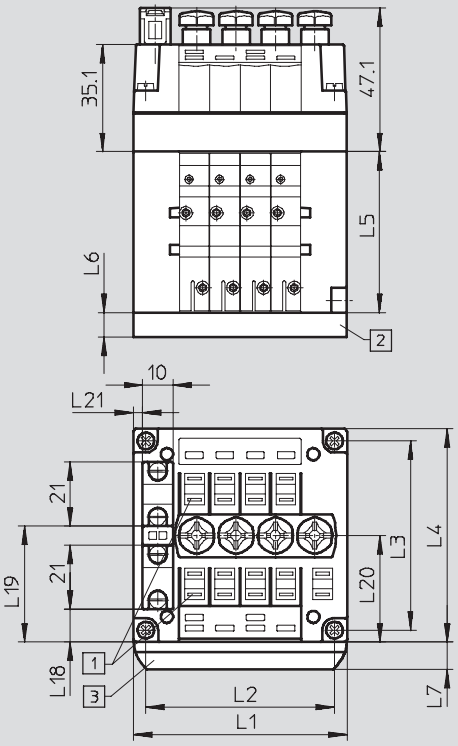

1 Slots for inscription labels
2 Pneumatic multiple connector plate
3 Inscription label holder (CPV10/14/18-VI-BZ-T-... or CPV10/14/18-VI-ST-T-...)

Valve terminal with AS-interface connection and additional inputs – CPV10

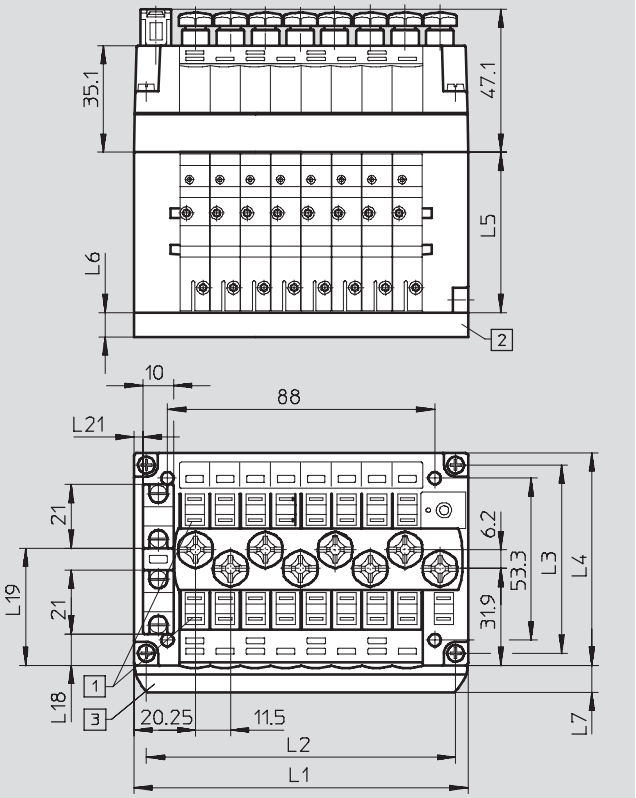

1 Slots for inscription labels
2 Pneumatic multiple connector plate
3 Inscription label holder (CPV10/14/18-VI-BZ-T-... or CPV10/14/18-VI-ST-T-...)

		L1	L2	L3	L4	L5	L6	L7	L18	L19	L20	L21
CPV10	4-fold	70	61.8	62	71	52.8	15	9.5	10.9	38.1	35	3
	8-fold	110	101.8						10.4	38.6	31.9	
CPV14	4-fold	96	86	78	89	58.8	20		18.8	46.8	43.3	5

Dimensions Download CAD data ➔ **www.festo.com**

Valve terminal with AS-interface connection and additional inputs – CPV14

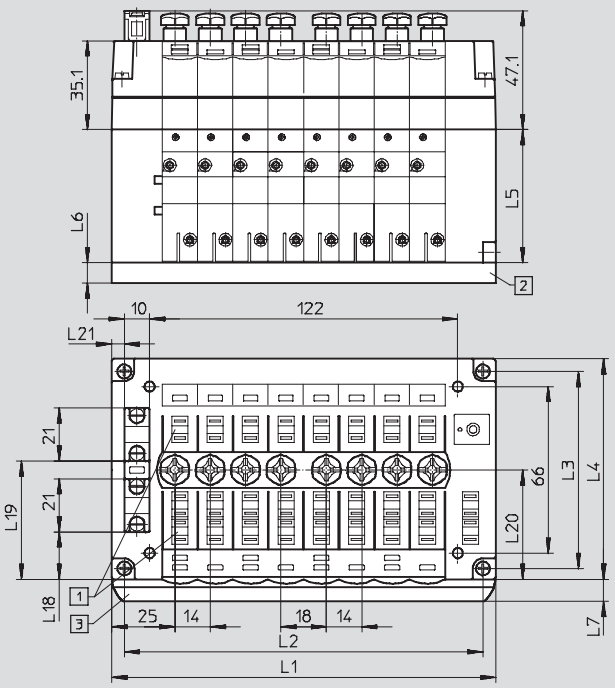

1 Slots for inscription labels
2 Pneumatic multiple connector plate
3 Inscription label holder (CPV10/14/18-VI-BZ-T-... or CPV10/14/18-VI-ST-T-...)

	L1	L2	L3	L4	L5	L6	L7	L18	L19	L20	L21
CPV14 8-fold	152	142	78	89	58.8	20	9.5	18.8	46.8	46.3	5

Dimensions Download CAD data ➔ **www.festo.com**

Valve terminal with CPI installation system – CPV10/14/18

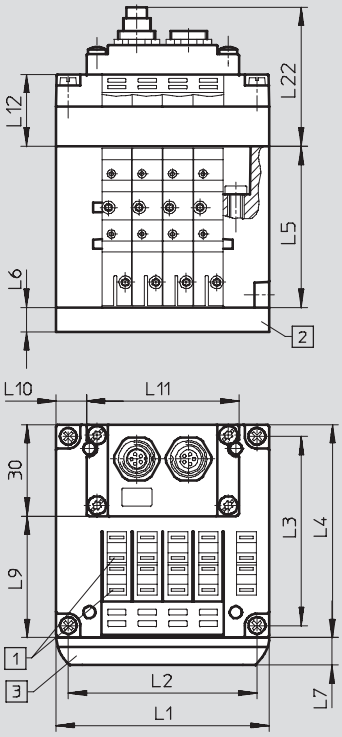

1 Slots for inscription labels

2 Pneumatic multiple connector plate

3 Inscription label holder (CPV10/14/18-VI-BZ-T-... or CPV10/14/18-VI-ST-T-...)

		L1	L2	L3	L4	L5	L6	L7	L9	L10	L11	L12	L22
CPV10	4-fold	70	61.8							10	50		
	6-fold	90	81.8	62	71	52.8	15	9.5	39.5	10	70	23.5	46
	8-fold	110	101.8							20	70		
CPV14	4-fold	96	86							23	50		
	6-fold	124	114	78	89	58.8	20	9.5	61.8	27	70	23.5	46
	8-fold	152	142							41	70		
CPV18	4-fold	132	121.5							41	50		
	6-fold	168	157.5	106.5	118	73	20	9.5	88.4	49	70	28	50.5
	8-fold	204	193.5							67	70		

Dimensions Download CAD data ➔ **www.festo.com**

Valve terminal with Fieldbus Direct – CPV10/14/18
Interbus

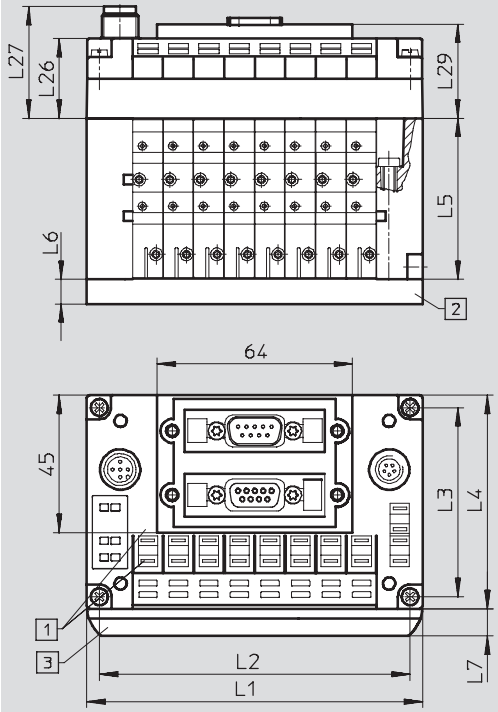

1 Slots for inscription labels
2 Pneumatic multiple connector plate
3 Inscription label holder (type CPV10/14/18-VI-BZ-T-... or CPV10/14/18-VI-ST-T-...)

Valve terminal with Fieldbus Direct – CPV10/14/18
DeviceNet, CANopen, CC-Link

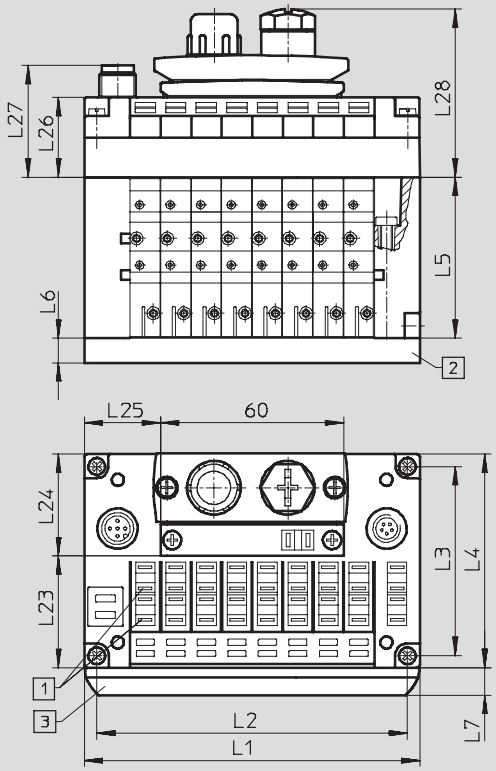

1 Slots for inscription labels
2 Pneumatic multiple connector plate
3 Inscription label holder (type CPV10/14/18-VI-BZ-T-... or CPV10/14/18-VI-ST-T-...)

		L1	L2	L3	L4	L5	L6	L7	L23	L24	L25	L26	L27	L28	L29
CPV10	8-fold	110	101.8	62	71	52.8	15	9.5	35.8	34.6	25	26.2	36.7	55.1	30.9
CPV14	8-fold	152	142	78	89	58.8	20	9.5	52.8	34.6	46	26.2	36.7	55.1	30.9
CPV18	8-fold	204	193.5	106.5	118	73	20	9.5	79.8	36.6	72	31.2	41.7	59.6	35.9

Dimensions Download CAD data ➔ **www.festo.com**

Valve terminal with Fieldbus Direct – CPV10/14/18
Profibus DP including Festo fieldbus, ABB CS31, Moeller Suconet K

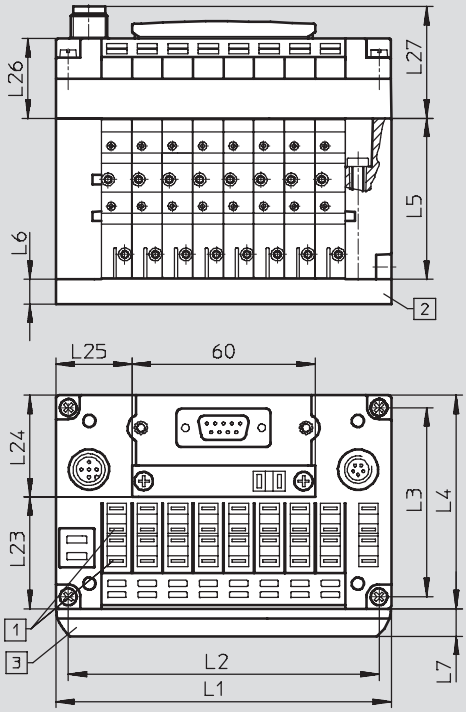

1 Slots for inscription labels

2 Pneumatic multiple connector plate

3 Inscription label holder (CPV10/14/18-VI-BZ-T-... or CPV10/14/18-VI-ST-T-...)

		L1	L2	L3	L4	L5	L6	L7	L23	L24	L25	L26	L27
CPV10	8-fold	110	101.8	62	71	52.8	15	9.5	35.5	34.6	25	26.2	36.7
CPV14	8-fold	152	142	78	89	58.8	20	9.5	52.8	34.6	46	26.2	36.7
CPV18	8-fold	204	193.5	106.5	118	73	20	9.5	79.8	36.6	72	31.2	41.7

Dimensions Download CAD data ➔ **www.festo.com**

Wall mounting CPV10/14-VI-BG-RWL-B for CPV10/14

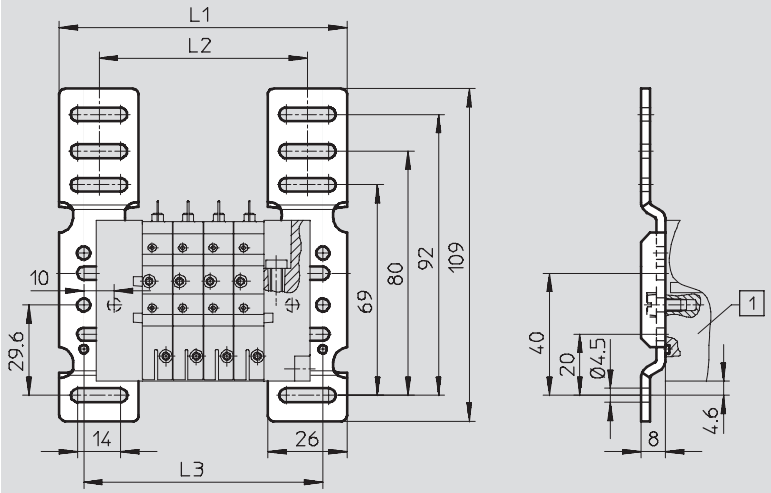

1 Valve terminal CPV-...

	CPV10							CPV14						
	2-fold	3-fold	4-fold	5-fold	6-fold	7-fold	8-fold	2-fold	3-fold	4-fold	5-fold	6-fold	7-fold	8-fold
L1	74	84	94	104	114	124	134	90	104	118	132	146	160	174
L2	48	58	68	78	88	98	108	64	78	92	106	120	134	148
L3	58	68	78	88	98	108	118	74	88	102	116	130	144	158

Wall mounting CPV18-VI-BG-RW for CPV18

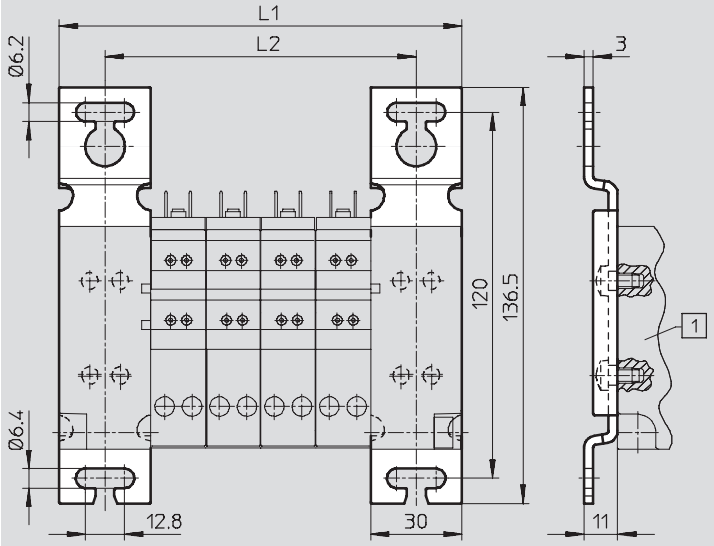

1 Valve terminal CPV-...

	CPV18						
	2-fold	3-fold	4-fold	5-fold	6-fold	7-fold	8-fold
L1	96	114	132	150	168	186	204
L2	66	84	102	120	138	156	174

Dimensions Download CAD data ➔ **www.festo.com**

Attachment CPV10-VI-BG-ET200X for individual connection and ET200X

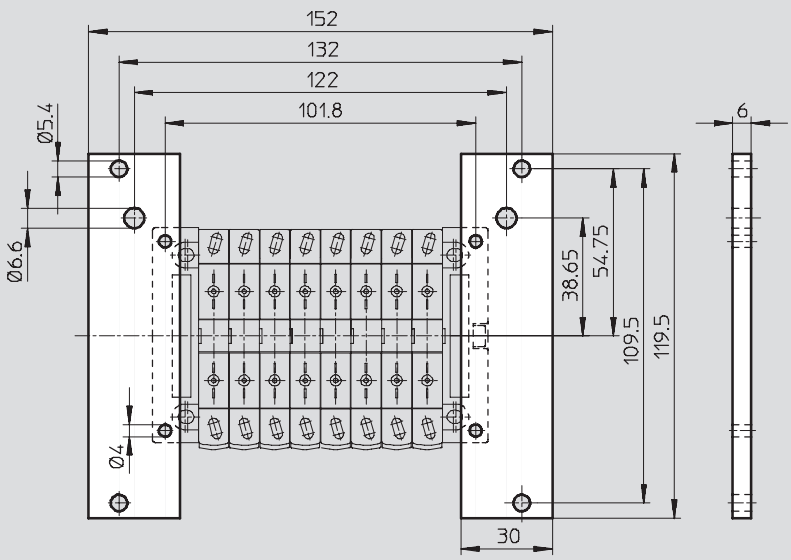

Attachment CPV14-VI-BG-ET200X for individual connection and ET200X

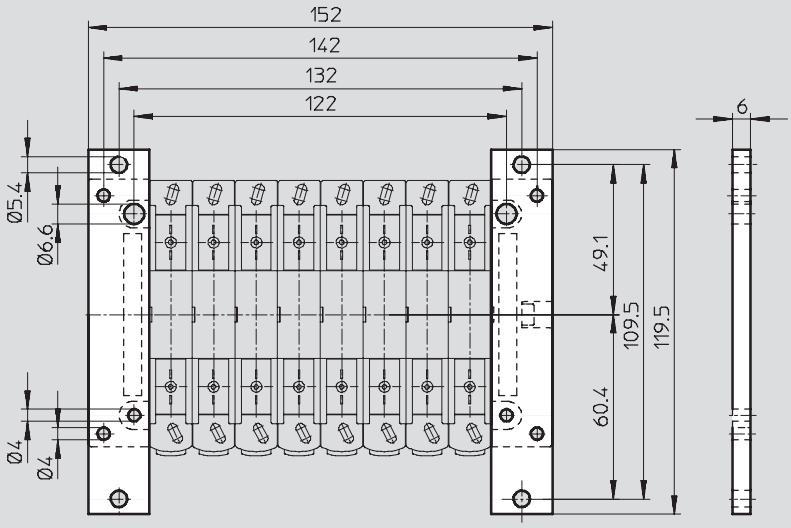

Dimensions Download CAD data ➔ **www.festo.com**

Attachment for H-rail mounting CPV10/14-VI-BG-NRH-35

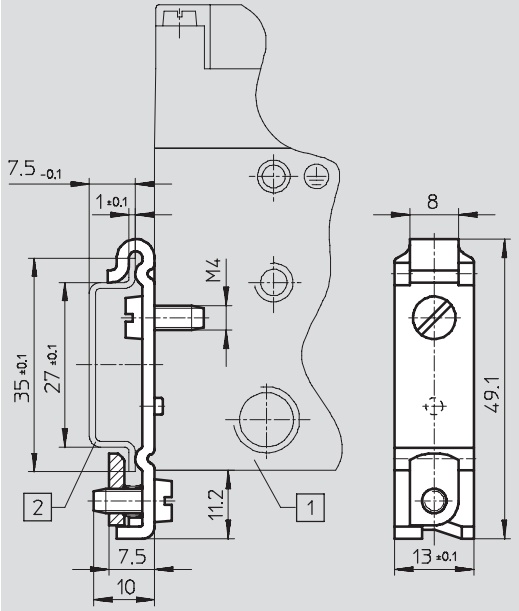

1 Valve terminal CPV10/14 2 H-rail to EN 60715

Attachment for H-rail mounting CPV18-VI-BG-NRH-35

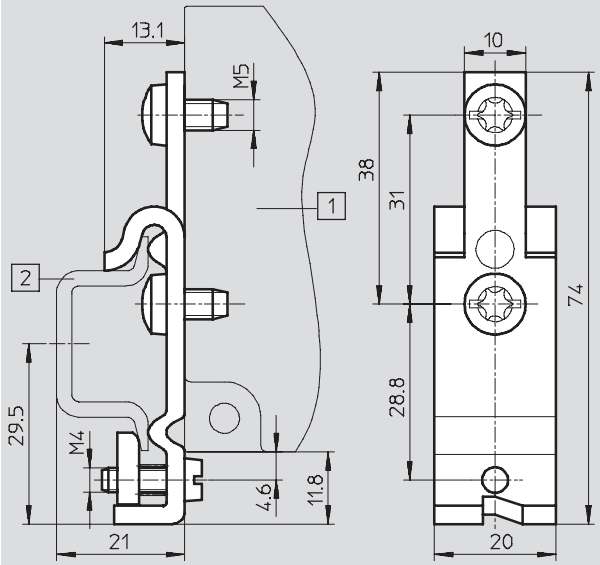

1 Valve terminal CPV18 2 H-rail to EN 60715

Dimensions Download CAD data ➔ **www.festo.com**

Pneumatic multiple connector plate – CPV10/14/18

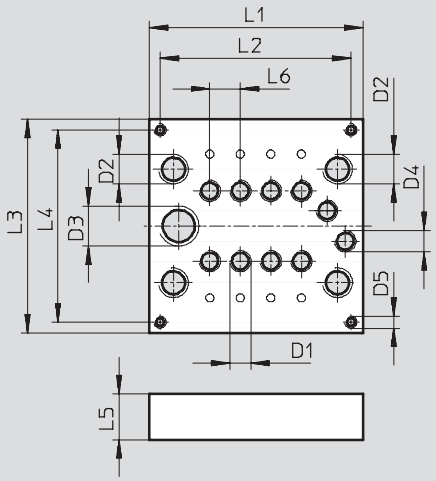

		L1	L2	L3	L4	L5	L6	D1	D2	D3	D4	D5
CPV10	2-fold	49.5	42.5	70	63	15	10	M7	G⅛	G¼	M7	M4
	4-fold	69.5	62.5									
	6-fold	89.5	82.5									
	8-fold	109.5	102.5									
CPV14	2-fold	67.5	53.5	86.6	76.6	20	14	G⅛	G¼	G⅜	G⅛	M4
	4-fold	95.5	81.5									
	6-fold	123.5	109.5									
	8-fold	151.5	137.5									
CPV18	2-fold	95.5	87.5	119.6	108	20	18	G¼	G⅜	G½	G¼	M5
	4-fold	131	123									
	6-fold	167	159									
	8-fold	203	195									

Dimensions Download CAD data ➔ **www.festo.com**

Flanged pneumatic multiple connector plate – CPV10/14/18

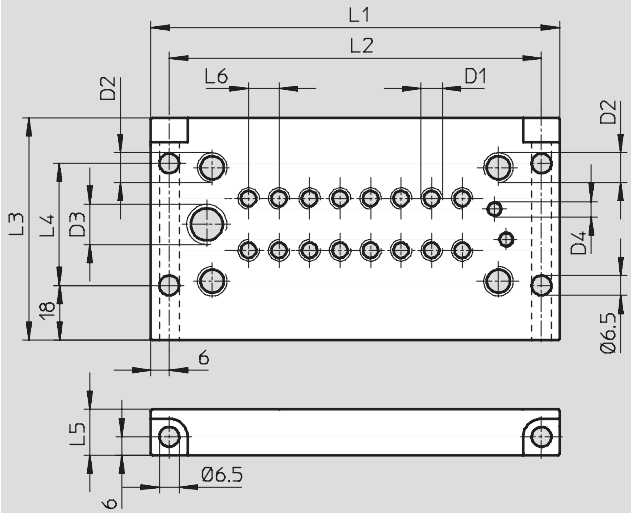

		L1	L2	L3	L4	L5	L6	D1	D2	D3	D4
CPV10	2-fold	74	62	73	40	15	10	M7	G⅛	G¼	M5
	4-fold	94	82								
	6-fold	114	102								
	8-fold	134	122								
CPV14	2-fold	92	80	89	59	20	14	G⅛	G¼	G⅜	G⅛
	4-fold	120	108								
	6-fold	148	136								
	8-fold	176	164								
CPV18	2-fold	119	107	118	88	20	18	G¼	G⅜	G½	G¼
	4-fold	155	143								
	6-fold	191	179								
	8-fold	227	215								

Dimensions Download CAD data ➔ **www.festo.com**

Pneumatic multiple connector plate for control cabinet installation, without supply connections – CPV10/14

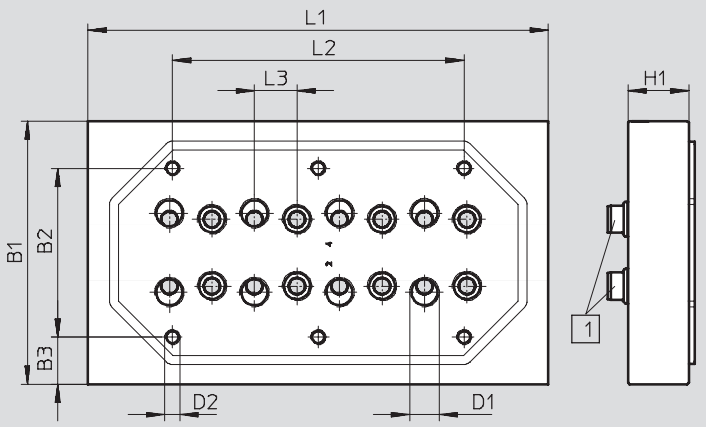

1 Seal

		L1	L2	L3	B1	B2	B3	D1	D2	H1
CPV10	2-fold	49.5	–	10	70	40	15	M7	M5	10
	4-fold	69.5	28							
	6-fold	89.5	49							
	8-fold	109.5	68							
CPV14	2-fold	67.5	13	14	86.6	55.6	15.5	G⅛	M5	14
	4-fold	95.5	40							
	6-fold	123.5	68							
	8-fold	151.5	96							

Pneumatic multiple connector plate for control cabinet installation, without supply connections – CPV10/14

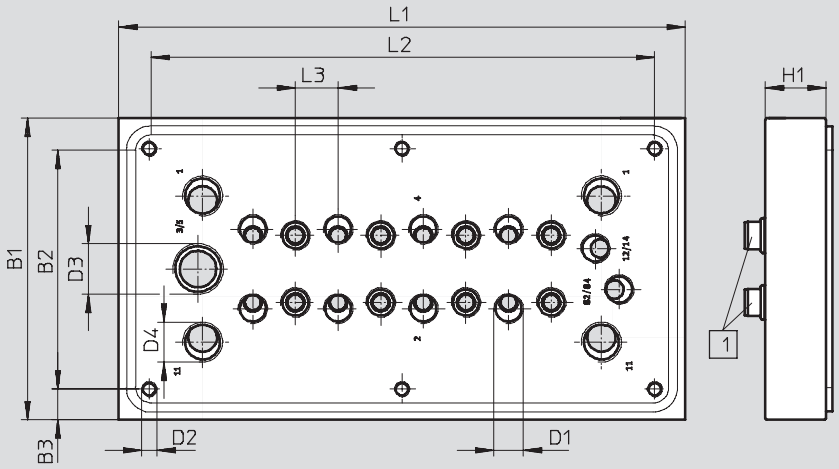

1 Seal

		L1	L2	L3	B1	B2	B3	D1	D2	D3	D4	H1
CPV10	2-fold	82	62	10	84	64	10	M7	M5	G¼	G⅛	15
	4-fold	102	82									
	6-fold	122	102									
	8-fold	142	122									
CPV14	2-fold	102	82	14	99	79	10	G⅛	M5	G⅜	G¼	20
	4-fold	130	110									
	6-fold	158	138									
	8-fold	186	166									

Dimensions Download CAD data ➔ **www.festo.com**

Valve kit for 5/3 function – CPV10/14

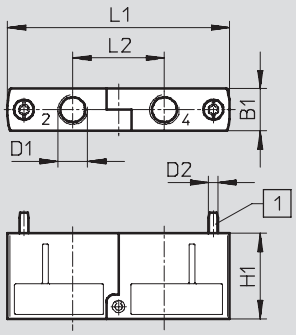

1 Mounting screw supplied loose

Type	B1	D1	D2	H1	L1	L2
CPV10-BS-5/3G-M7	9.9	M7	M2.5	22	55.8	23
CPV14-BS-5/3G-⅛	13.8	G⅛	M3	28	72.8	30

Additional one-way flow control valve function – CPV10/14

CPV10/14-...-BS-2xGR...-...

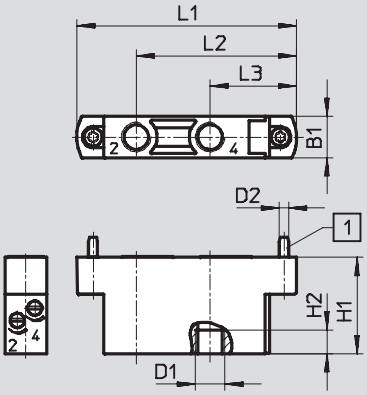

1 Mounting screw supplied loose

Additional one-way flow control valve function for vacuum – CPV10/14

CPV-...-BS-2xGRZ-V-...

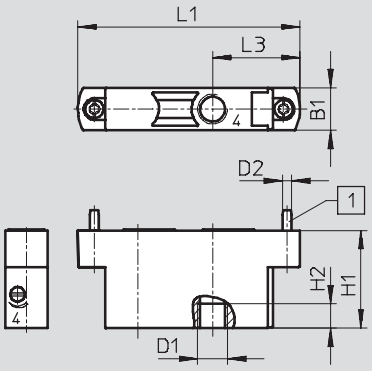

Type	B1	D1	D2	H1	H2	L1	L2	L3
CPV10-BS-2xGR...-M7	9.9	M7	M2.5	26	6	55.8	41.4	22.9
CPV10-BS-2xGRZ-V...-M7							–	
CPV14-BS-2xGR...-⅛	13.8	G⅛	M3	32	8	72.8	53.15	28.65
CPV14-BS-2xGRZ-V...-⅛							–	

Dimensions Download CAD data ➔ **www.festo.com**

Fieldbus connector FBS-SUB-9-BU-2x4POL

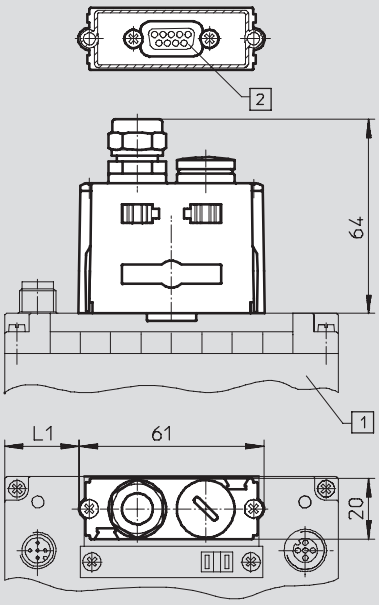

1 Valve terminal with Fieldbus Direct CPV10/14/18 and fieldbus node for DeviceNet and CANopen

2 Sub-D socket, 9-pin

Fieldbus connector FBSD-KL-2x5PIN

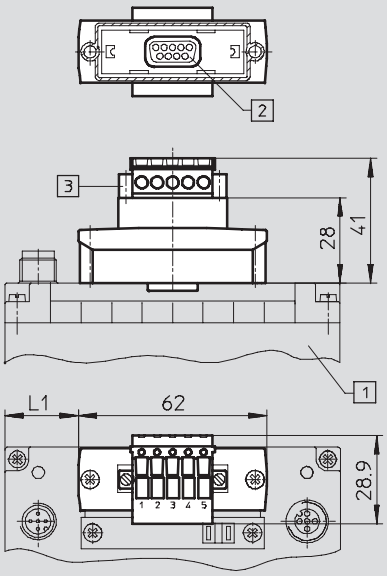

1 Valve terminal with Fieldbus Direct CPV10/14/18 and fieldbus node for DeviceNet and CANopen

2 Sub-D socket, 9-pin

3 Fieldbus connection FBSD-KL-2x5pin

	CPV10 8-fold	CPV14 8-fold	CPV18 8-fold
L1	24.5	45.5	71.5

	CPV10 8-fold	CPV14 8-fold	CPV18 8-fold
L1	24	45	71

Ordering data				
	Code	Valve function	Type	Part No.
Sub-base valve individual sizes 10/14/18				
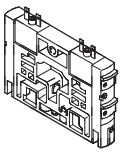	M	5/2-way valve, single solenoid, piston spool valve	CPV10-M1H-5LS-M7	161 414
			CPV14-M1H-5LS-⅛	161 360
			CPV18-M1H-5LS-¼	163 190
	F	5/2-way valve, single solenoid, fast switching, piston spool valve	CPV10-M11H-5LS-M7	187 439
	J	5/2-way valve, double solenoid, piston spool valve	CPV10-M1H-5JS-M7	161 415
			CPV14-M1H-5JS-⅛	161 361
			CPV18-M1H-5JS-¼	163 191
	N	2x 3/2-way valve, normally open, piston spool valve	CPV10-M1H-2x3-OLS-M7	161 417
			CPV14-M1H-2x3-OLS-⅛	161 363
			CPV18-M1H-2x3-OLS-¼	163 188
	C	2x 3/2-way valve, normally closed, piston spool valve	CPV10-M1H-2x3-GLS-M7	161 416
			CPV14-M1H-2x3-GLS-⅛	161 362
			CPV18-M1H-2x3-GLS-¼	163 189
	CY	2 x 3/2-way valve, normally closed Integrated back pressure protection, piston spool valve	CPV10-M1H-2x3-GLS-Y-M7	553 260
	H	2x 3/2-way valve, 1x normally open, 1x closed, piston spool valve	CPV10-M1H-30LS-3GLS-M7	176 064
			CPV14-M1H-30LS-3GLS-⅛	176 067
			CPV18-M1H-30LS-3GLS-¼	176 070
	G	5/3-way valve, mid-position closed, piston spool valve	CPV18-M1H-5/3GS-¼	176 061
	D	2x 2/2-way valve, normally closed, piston spool valve	CPV10-M1H-2x2-GLS-M7	185 880
			CPV14-M1H-2x2-GLS-⅛	185 883
			CPV18-M1H-2x2-GLS-¼	185 886
	I	2x 2/2-way valve, 1x normally open, 1x closed, piston spool valve	CPV10-M1H-2OLS-2GLS-M7	187 843
			CPV14-M1H-2OLS-2GLS-⅛	187 846
			CPV18-M1H-2OLS-2GLS-¼	187 849
Sub-base valve individual with channel separation 1, 11 sizes 10/14				
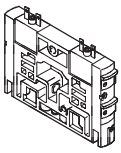	MK	5/2-way valve (with channel separation 1, 11), single solenoid, piston spool valve	CPV10-M1H-5LS-K-M7	553 256
			CPV14-M1H-5LS-K-⅛	553 258
	JK	5/2-way valve (with channel separation 1, 11), double-solenoid, piston spool valve	CPV10-M1H-5JS-K-M7	559 644
			CPV14-M1H-5JS-K-⅛	559 651
	NK	2x 3/2-way valve (with channel separation 1, 11), normally open, piston spool valve	CPV10-M1H-2x3-OLS-K-M7	559 641
			CPV14-M1H-2x3-OLS-K-⅛	559 648
	CK	2 x 3/2-way valve (with channel separation 1, 11), normally closed, piston spool valve	CPV10-M1H-2x3-GLS-K-M7	553 257
			CPV14-M1H-2x3-GLS-K-⅛	553 259
	HK	2x 3/2-way valve (with channel separation 1, 11), 1x normally open, 1x closed, piston spool valve	CPV10-M1H-30LS-3GLS-K-M7	559 642
			CPV14-M1H-30LS-3GLS-K-⅛	559 649
	DK	2x 2/2-way valve (with channel separation 1, 11), normally closed, piston spool valve	CPV10-M1H-2x2-GLS-K-M7	559 645
			CPV14-M1H-2x3-GLS-K-⅛	559 652
	IK	2x 2/2-way valve (with channel separation 1, 11), 1x normally open, 1x closed, piston spool valve	CPV10-M1H-2OLS-2GLS-K-M7	559 646
			CPV14-M1H-2OLS-2GLS-K-⅛	559 653

Ordering data				
	Code	Designation	Type	Part No.
Vacuum generators				
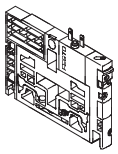	A	Vacuum generators	CPV10-M1H-V70-M7	185 862
			CPV14-M1H-V95-⅛	185 868
			CPV18-M1H-V140-¼	185 874
	E	Vacuum generator with ejector pulse	CPV10-M1H-VI70-2GLS-M7	185 865
			CPV14-M1H-VI95-2GLS-⅛	185 871
			CPV18-M1H-VI140-2GLS-¼	185 877
Functional module				
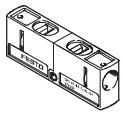	G	Valve kit for 5/3-way valve function, closed (in combination with valve slice C) for size 10 and 14	CPV10-BS-5/3G-M7	176 055
			CPV14-BS-5/3G-⅛	176 057
Separator plates				
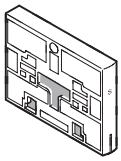	T	Separator plate, duct 1/11 closed	CPV10-DZP	161 369
			CPV14-DZP	162 551
			CPV18-DZP	163 282
	S	Separator plate, duct 1/11, 3/5 closed	CPV10-DZPR	178 678
			CPV14-DZPR	178 680
			CPV18-DZPR	184 543
Relay plate				
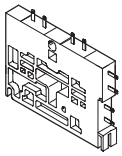	R	Relay plate	CPV10-RP2	174 478
			CPV14-RP2	174 480
Blanking plate				
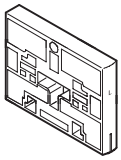	L	Blanking plate	CPV10-RZP	161 368
			CPV14-RZP	162 550
			CPV18-RZP	163 283
Additional functions for valve positions				
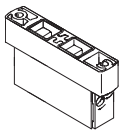	P	One-way flow control valve, 2x supply air	CPV-10-BS-2xGRZZ-M7	184 140
			CPV-14-BS-2xGRZZ-⅛	184 142
	Q	One-way flow control valve, 2x exhaust air	CPV-10-BS-2xGRAZ-M7	184 141
			CPV-14-BS-2xGRAZ-⅛	184 143
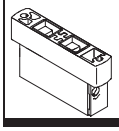	V	One-way flow control valve for vacuum	CPV-10-BS-2xGRZ-V-M7	185 889
			CPV-14-BS-2xGRZ-V-⅛	185 891

Ordering data					
Designation				Type	Part No.
Pneumatic multiple connector					
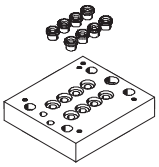	M	Pneumatic multiple connector, for wall/machine mounting, without side web	2-fold	**CPV10-VI-P2-M7**	**161 969**
			4-fold	**CPV10-VI-P4-M7**	**161 970**
			6-fold	**CPV10-VI-P6-M7**	**161 971**
			8-fold	**CPV10-VI-P8-M7**	**163 893**
			2-fold	**CPV14-VI-P2-⅛**	**163 894**
			4-fold	**CPV14-VI-P4-⅛**	**163 895**
			6-fold	**CPV14-VI-P6-⅛**	**163 896**
			8-fold	**CPV14-VI-P8-⅛**	**163 897**
			2-fold	**CPV18-VI-P2-¼**	**165 292**
			4-fold	**CPV18-VI-P4-¼**	**165 293**
			6-fold	**CPV18-VI-P6-¼**	**165 294**
			8-fold	**CPV18-VI-P8-¼**	**165 295**
	P	Pneumatic multiple connector, for wall/machine mounting, with side web	2-fold	**CPV10-VI-P2-M7-B**	**152 420**
			4-fold	**CPV10-VI-P4-M7-B**	**152 421**
			6-fold	**CPV10-VI-P6-M7-B**	**152 422**
			8-fold	**CPV10-VI-P8-M7-B**	**152 423**
			2-fold	**CPV14-VI-P2-⅛-B**	**152 424**
			4-fold	**CPV14-VI-P4-⅛-B**	**152 425**
			6-fold	**CPV14-VI-P6-⅛-B**	**152 426**
			8-fold	**CPV14-VI-P8-⅛-B**	**152 428**
			2-fold	**CPV18-VI-P2-¼-B**	**175 632**
			4-fold	**CPV18-VI-P4-¼-B**	**175 634**
			6-fold	**CPV18-VI-P6-¼-B**	**175 636**
			8-fold	**CPV18-VI-P8-¼-B**	**175 638**
	GQC	Pneumatic multiple connector plate with sealing ring, for control cabinet assembly, with supply connections	2-fold	**CPV10-VI-P2-M7-C**	**538 807**
			4-fold	**CPV10-VI-P4-M7-C**	**538 808**
			6-fold	**CPV10-VI-P6-M7-C**	**538 809**
			8-fold	**CPV10-VI-P8-M7-C**	**538 810**
			2-fold	**CPV14-VI-P2-⅛-C**	**539 498**
			4-fold	**CPV14-VI-P4-⅛-C**	**539 499**
			6-fold	**CPV14-VI-P6-⅛-C**	**539 500**
			8-fold	**CPV14-VI-P8-⅛-C**	**539 501**
	GQD	Pneumatic multiple connector plate with sealing ring, for control cabinet assembly, without supply connections	2-fold	**CPV10-VI-P2-M7-D**	**538 811**
			4-fold	**CPV10-VI-P4-M7-D**	**538 812**
			6-fold	**CPV10-VI-P6-M7-D**	**538 813**
			8-fold	**CPV10-VI-P8-M7-D**	**538 814**
			2-fold	**CPV14-VI-P2-⅛-D**	**539 502**
			4-fold	**CPV14-VI-P4-⅛-D**	**539 503**
			6-fold	**CPV14-VI-P6-⅛-D**	**539 504**
			8-fold	**CPV14-VI-P8-⅛-D**	**539 505**

Ordering data				
	Code	Designation	Type	Part No.
Inscription label holder				
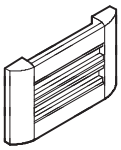	Z	Holder for inscription labels	**CPV10-VI-BZ-T-2**	**162 560**
			CPV10-VI-BZ-T-3	**162 561**
			CPV10-VI-BZ-T-4	**162 562**
			CPV10-VI-BZ-T-5	**162 563**
			CPV10-VI-BZ-T-6	**162 564**
			CPV10-VI-BZ-T-7	**162 565**
			CPV10-VI-BZ-T-8	**162 566**
			CPV14-VI-BZ-T-2	**162 567**
			CPV14-VI-BZ-T-3	**162 568**
			CPV14-VI-BZ-T-4	**162 569**
			CPV14-VI-BZ-T-5	**162 570**
			CPV14-VI-BZ-T-6	**162 571**
			CPV14-VI-BZ-T-7	**162 572**
			CPV14-VI-BZ-T-8	**162 573**
			CPV18-VI-BZ-T-2	**163 293**
			CPV18-VI-BZ-T-3	**163 294**
			CPV18-VI-BZ-T-4	**163 295**
			CPV18-VI-BZ-T-5	**163 296**
			CPV18-VI-BZ-T-6	**163 297**
			CPV18-VI-BZ-T-7	**163 298**
			CPV18-VI-BZ-T-8	**163 299**
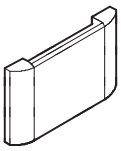	T	Holder for inscription labels, transparent	**CPV10-VI-ST-T-2**	**194 066**
			CPV10-VI-ST-T-3	**194 067**
			CPV10-VI-ST-T-4	**194 068**
			CPV10-VI-ST-T-5	**194 069**
			CPV10-VI-ST-T-6	**194 070**
			CPV10-VI-ST-T-7	**194 071**
			CPV10-VI-ST-T-8	**194 072**
			CPV14-VI-ST-T-2	**194 073**
			CPV14-VI-ST-T-3	**194 074**
			CPV14-VI-ST-T-4	**194 075**
			CPV14-VI-ST-T-5	**194 076**
			CPV14-VI-ST-T-6	**194 077**
			CPV14-VI-ST-T-7	**194 078**
			CPV14-VI-ST-T-8	**194 079**
			CPV18-VI-ST-T-2	**194 080**
			CPV18-VI-ST-T-3	**194 081**
			CPV18-VI-ST-T-4	**194 082**
			CPV18-VI-ST-T-5	**194 083**
			CPV18-VI-ST-T-6	**194 084**
			CPV18-VI-ST-T-7	**194 085**
			CPV18-VI-ST-T-8	**194 086**
Inscription labels				
	–	6x10 mm in frames, 64 pieces	**IBS 6x10**	**18 576**
		9x20 mm in frames, 20 pieces (CPV18 only)	**IBS 9x20**	**18 182**

Ordering data					
	Code	Designation		Type	Part No.
Module retainer					
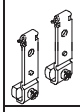	H	Mounting for H-rail		**CPV10/14-VI-BG-NRH-35**	**162 556**
				CPV18-VI-BG-NRH-35	**163 291**
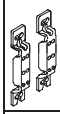	W	Attachment for wall mounting		**CPV18-VI-BG-RW**	**163 292**
	U			**CPV10/14-VI-BG-RWL-B**	**189 541**
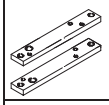	X	Attachment for individual connection and ET200X (included in the scope of delivery)		**CPV10-VI-BG-ET200X**	**165 801**
				CPV14-VI-BG-ET200X	**165 803**
Manual override tool					
	–	Locking clip (for manual override), non-disconnectable		**CPV10/14-HS**	**526 203**
				CPV18-HS	**526 204**
	V	Blocking clip (cover for manual override), non-disconnectable		**CPV10/14-HV**	**530 055**
				CPV18-HV	**530 056**
Relay plate					
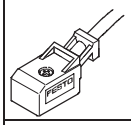	K	Connecting cable for relay plate	2.5 m	**KRP-1-24-2,5**	**165 612**
	L		5 m	**KRP-1-24-5**	**165 613**
Cable for individual connection, electrical					
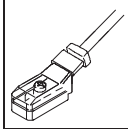	D	Plug socket with cable (CPV10/14), suitable for chain link trunking	2.5 m	**KMYZ-7-24-2,5-LED-PUR**	**193 683**
	E		5 m	**KMYZ-7-24-5-LED-PUR**	**193 685**
	F		10 m	**KMYZ-7-24-10-LED-PUR**	**196 070**
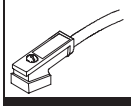	D	Plug socket with cable (CPV18)	2.5 m	**KMEB-2-24-2,5-LED**	**174 844**
	E		5 m	**KMEB-2-24-5-LED**	**174 845**

Ordering data					
	Code	Designation		Type	Part No.
Multi-pin plug connection, electrical					
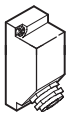	Y	Plug socket, 9-pin		**SD-SUB-D-BU9**	**18 708**
		Plug socket, 25-pin		**SD-SUB-D-BU25**	**18 709**
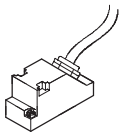	R	Connecting cable, 9-pin, polyvinyl chloride	5 m	**KMP3-9P-08-5**	**18 698**
		Connecting cable, 25-pin, polyvinyl chloride		**KMP3-25P-16-5**	**18 624**
	S	Connecting cable, 9-pin, polyvinyl chloride	10 m	**KMP3-9P-08-10**	**18 579**
		Connecting cable, 25-pin, polyvinyl chloride		**KMP3-25P-16-10**	**18 625**
	–	Connecting cable, 9-pin, polyurethane	5 m	**KMP4-9P-5-PUR**	**193 014**
		Connecting cable, 25-pin, polyurethane		**KMP4-25P-5-PUR**	**193 018**
	–	Connecting cable, 9-pin, polyurethane	10 m	**KMP4-9P-10-PUR**	**193 015**
		Connecting cable, 25-pin, polyurethane		**KMP4-25P-10-PUR**	**193 019**
	–	Connecting cable, with 9-pin Sub-D plug, IP40, polyvinyl chloride cable	2.5 m	**KMP6-09P-8-2,5**	**531 184**
			5 m	**KMP6-09P-8-5**	**531 185**
			10 m	**KMP6-09P-8-10**	**531 186**
	–	Connecting cable, with 25-pin Sub-D plug, IP40, polyvinyl chloride cable	2.5 m	**KMP6-25P-20-2,5**	**530 046**
			5 m	**KMP6-25P-20-5**	**530 047**
			10 m	**KMP6-25P-20-10**	**530 048**
Fieldbus connection for Fieldbus Direct					
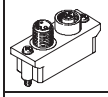	GA	Straight socket, Sub-D 9-pin for DeviceNet/CANopen, plug/socket M12 5-pin, IP65		**FBA-2-M12-5POL**	**525 632**
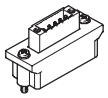	GB	Straight socket, Sub-D 9-pin for DeviceNet/CANopen, plug 5-pin, IP40		**FBA-1-SL-5POL**	**525 634**
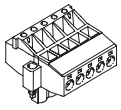		Angled socket 5-pin for DeviceNet/CANopen, screw terminal 5-pin, IP20		**FBSD-KL-2x5PIN**	**525 635**
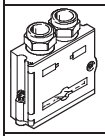	GD	Plug 9-pin, Sub-D for DeviceNet/CANopen, IP65		**FBS-SUB-9-BU-2x4PIN**	**197 960**
	GE	Plug Sub-D, IP65, 9-pin for Profibus DP		**FBS-SUB-9-GS-DP-B**	**532 216**
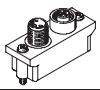	GF	Bus connection 2x M12 adapter plug (B-coded, ReverseKey) for Profibus DP		**FBA-2-M12-5POL-RK**	**533 118**
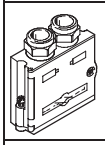	GI	Plug socket 9-pin, Sub-D for Interbus nodes CPX and CPV		**FBS-SUB-9-BU-IB-B**	**532 218**
		Plug 9-pin, Sub-D for Interbus nodes CPX and CPV		**FBS-SUB-9-GS-IB-B**	**532 217**
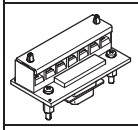	GL	Straight socket, Sub-D 9-pin, screw terminal 5-pin, IP20		**FBA-1-KL-5POL**	**197 962**
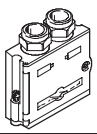	GM	Plug 9-pin, Sub-D, for CC-Link CPX and CPV, IP65		**FBS-SUB-9-GS-2x4POL-B**	**532 220**

Ordering data				
Designation			Type	Part No.
Operating voltage connection for Fieldbus Direct				
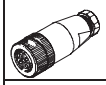	Straight socket	M12, 4-pin, PG7, IP65	**FBSD-GD-7**	**18 497**
		M12, 4-pin, PG9, IP65	**FBSD-GD-9**	**18 495**
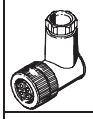	Angled socket	M12, 4-pin, PG7, IP65	**FBSD-WD-7**	**18 524**
		M12, 4-pin, PG9, IP65	**FBSD-WD-9**	**18 525**
Blanking plugs				
	Blanking plugs		**B-M5**	**3 843**
			B-M7	**174 309**
			B-⅛	**3 568**
			B-¼	**3 569**
			B-⅜	**3 570**
			B-½	**3 571**
Push-in fitting				
	Push-in fitting		**QS-⅛-8-I**	**153 015**
			QS-¼-10-I	**153 018**
			QS-⅜-12-I	**153 020**
			QSM-M5-6-I	**153 317**
			QSM-M7-6-I	**153 321**
Silencers				
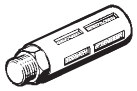	Silencers		**U-M5**	**4 645**
			U-⅛-B	**6 841**
			U-¼-B	**6 842**
			U-⅜-B	**6 843**
			U-½-B	**6 844**
			UC-M7	**161 418**
User documentation				
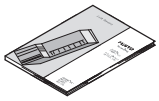	CPV Pneumatics Description	German	**P.BE-CPV-DE**	**165 100**
		English	**P.BE-CPV-EN**	**165 200**
		French	**P.BE-CPV-FR**	**165 130**
		Italian	**P.BE-CPV-IT**	**165 160**
		Spanish	**P.BE-CPV-ES**	**165 230**
		Swedish	**P.BE-CPV-SV**	**165 260**