Valve terminals type 04 VIMP-/VIFB-04, ISO 5599/2

FESTO

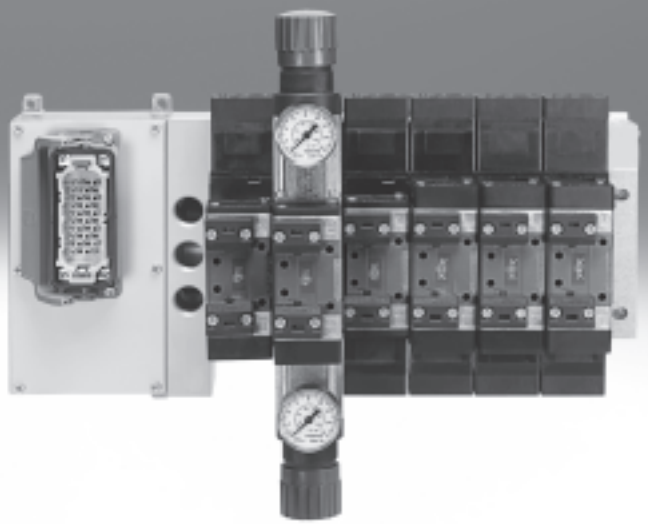

Type discontinued
Available up until 2012

Valve terminals type 04 VIMP-/VIFB-04, ISO 5599/2

Key features

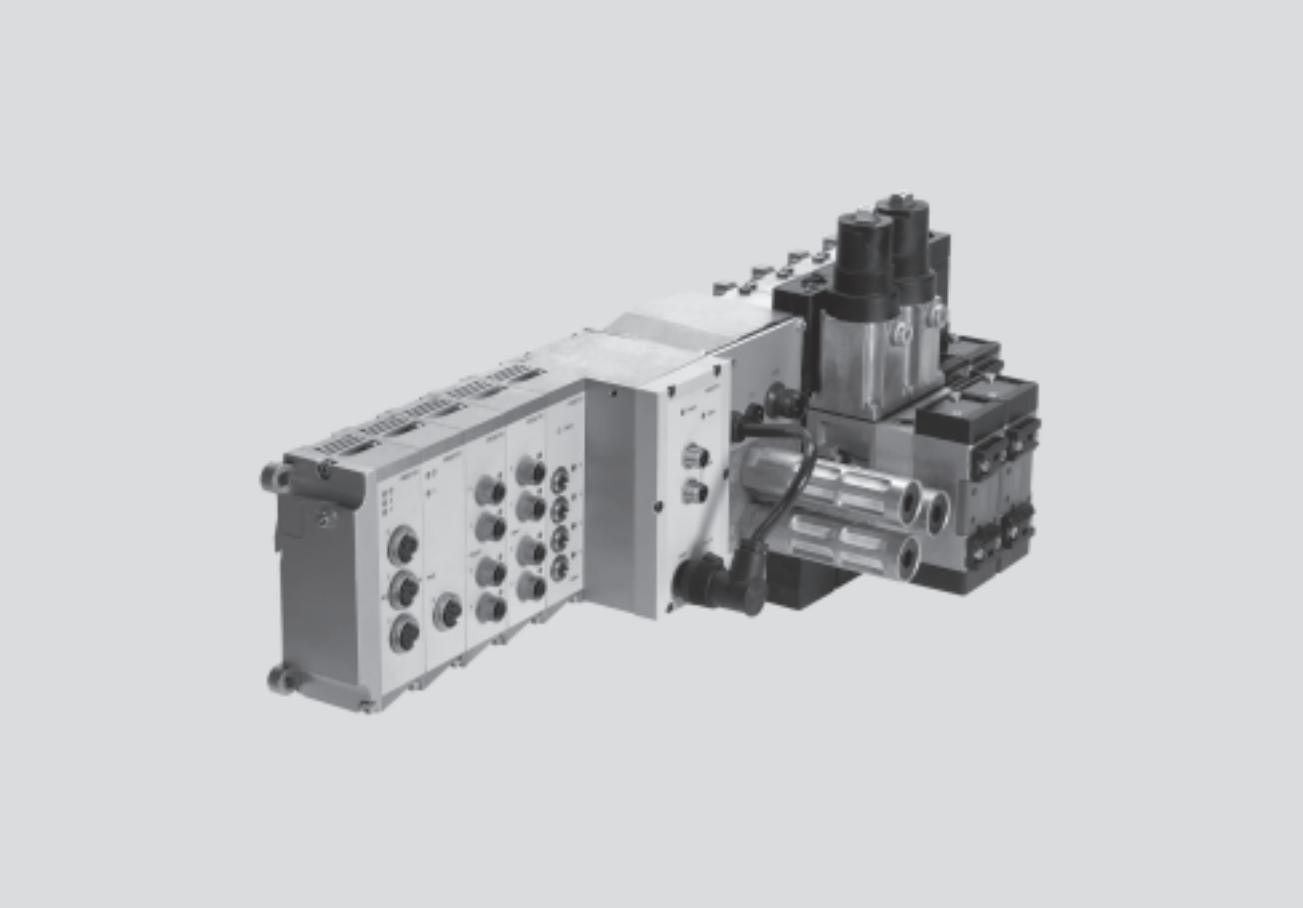

Modular

- 1 … 16 standard valves
- 1 … 12 I/O modules
- Analogue I/O modules
- CP interface
- Modular electrical connection system:
  - Multi-pin plug connection
  - Fieldbus connection
  - Control block with integrated PLC

Versatile

- Festo valve terminals for ISO valves are of sturdy and modular design and can be equipped with 1 to 16 valves as desired.
- Multiple pressure zones and vacuum operation as well as integrated flow control valves and regulators (vertical stacking) can also be implemented on a valve terminal.
- Conversions and extensions are possible at any time.
- Versatile valve functions that fulfil a wide variety of pneumatic control technology requirements.
- Wide pressure range −0.9 … 16 bar.
- Valves 24 V DC or 120 V AC.

Reliable

- Sturdy and durable components made of high-quality metal/plastic.
- With IP65 protection.
- Fast error diagnostics thanks to LEDs on the valves and diagnostics via fieldbus/control block.
- All valves feature manual override.
- Reliability of service through replaceable valves and electronics modules.
- Additional fuse per solenoid coil.
- Labelling system for valves and electronics.
- 100% duty cycle.

Easy to mount

- Fully assembled and tested unit.
- Mounting from the front or the rear.
- Lower selection, ordering, assembly and commissioning costs.

Valve terminals type 04 VIMP-/VIFB-04, ISO 5599/2

Key features

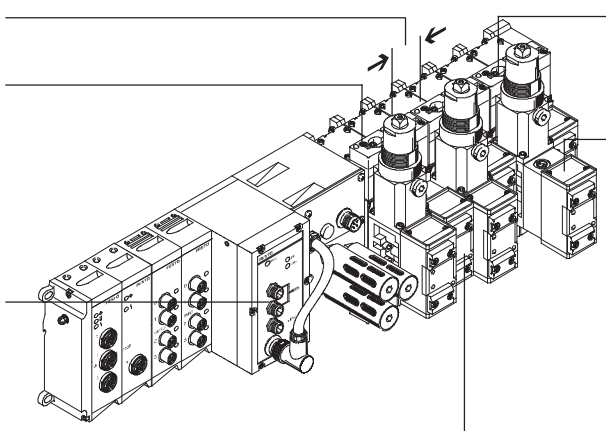

Width 43 mm, 59 mm and 72 mm

Reduced downtimes:
On-site diagnostics via LEDs

Simple electrical connections
- Fieldbus connection
- Multi-pin plug connection
- Control block via electrical peripherals for type 03/04

Reliable operation:
Manual override, non-detenting

Flexible:
- Max.28 solenoid coils
- One valve series for a wide range of flow rates

Functional:
Robust metal thread
or pre-assembled QS fittings

Modular:
Creation of pressure zones

Equipment options

Valve functions

- 5/2-way valve
  - Single solenoid, pneumatic spring/mechanical spring
  - Double solenoid
  - Double solenoid with dominant signal
- 5/3-way valve
  - Mid-position pressurised
  - Mid-position closed
  - Mid-position exhausted

Special features

Multi-pin plug terminal
- Max. 14 valve positions/ max. 28 solenoid coils
- Parallel modular valve linking
- Any number of pressure zones

Fieldbus terminal/control block
- Max. 16 valve positions/ max. 26 solenoid coils
- Any number of pressure zones

Flow rate
- Width 43 mm:
  valve flow rate up to 1,200 l/min
- Width 59 mm:
  valve flow rate up to 2,300 l/min
- Width 72 mm:
  valve flow rate up to 4,500 l/min

Note

Valve terminal type 04 conforms to ISO 5599-2

Type discontinued
Available up until 2012

Valve terminals type 04 VIMP-/VIFB-04, ISO 5599/2

Key features

Electrical connection options

Valve terminal with multi-pin plug connection

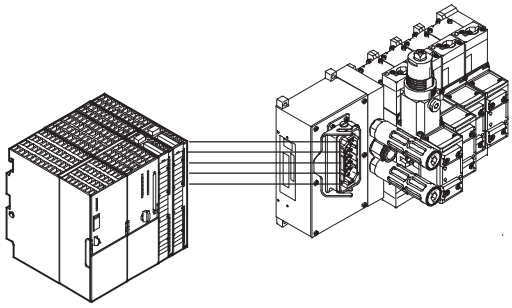

A multi-core cable carries the signal from the controller to the multi-pin node on the valve terminal.

Valve terminal with fieldbus connection

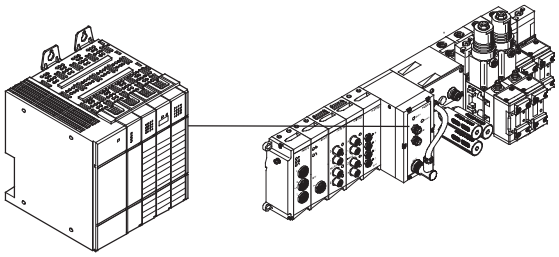

A fieldbus cable carries the signal in serial mode from the controller to the fieldbus node on the valve terminal.

Valve terminal with control block and integrated controller

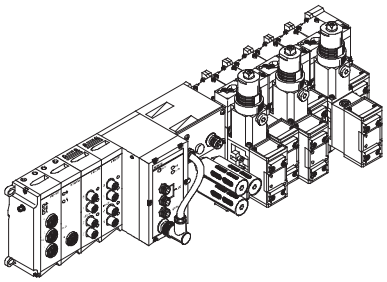

This valve terminal controls its digital and analogue inputs and outputs itself (autonomously) and is also equipped with communication interfaces for networking with other controllers (decentralised intelligence).

Note

Valve terminals can be ordered quickly and easily online.
The convenient product configurator is available on:

➔ Internet: type 04 iso

Valve terminals type 04 VIMP-/VIFB-04, ISO 5599/2

Key features

Multi-pin variants type 04A

Valve terminals with multi-pin plug connections can be connected in the normal way to the I/O cards of all current control systems or industrial PCs. The central control system requires a powerful PLC with a correspondingly high number of I/O cards and must also be connected to the fieldbus devices with complex parallel wiring. Festo offers several installation-saving multi-pin nodes and the appropriate multi-pin cables. The pneumatic components and the multi-pin nodes (MP) are described in this chapter.

Variant with multi-pin plug connection MP3 – Harting plug

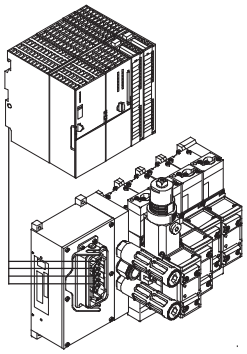

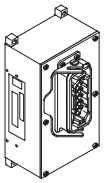

Multi-pin node

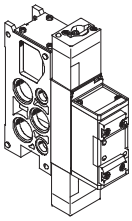

Valve manifold sub-base

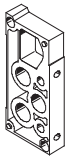

End plate

Plug in sturdy industrial design for up to 14 valves/28 solenoid coils.
Activation:
- 24 V DC
- 120 V AC

Pre-assembled cables are available.

Variant with multi-pin plug connection MP4 – round plug from Electrivert Inc.

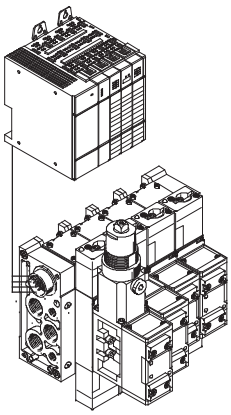

Multi-pin node on the end plate

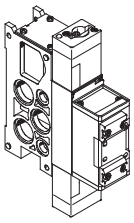

Valve manifold sub-base

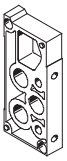

End plate

Slim plug on the left-hand end plate for up to 14 valves/28 solenoid coils, 11-pin or 31-pin.
Activation:
- 24 V DC
- 120 V AC

Pre-assembled cables are available.

Valve terminals type 04 VIMP-/VIFB-04, ISO 5599/2

Key features

Connection options for fieldbus/control block variants

Fieldbus node with electrical I/O modules

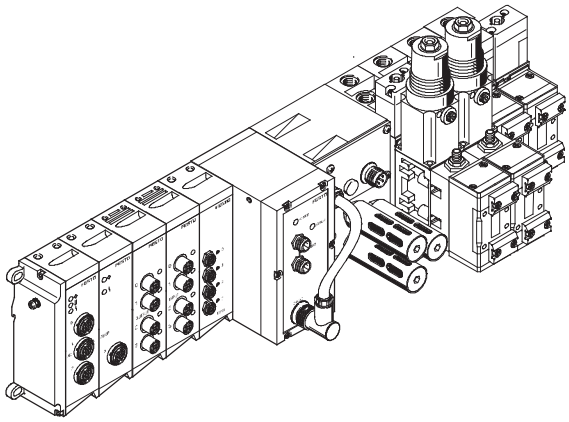

Communication and diagnostics with all common bus systems:

- Up to 26 solenoid coils
- Up to 12 sturdy type 03/04B I/O modules can be mounted
- IP65 connection technology with M12 or Sub-D plugs
- Digital I/O modules
- Analogue I/O modules
- Multi-functional I/O modules

The pneumatic components of this valve terminal and the multi-pin nodes (MP) are described in this chapter. The electrical peripherals are described here:

➔ Internet: type 04

Control block

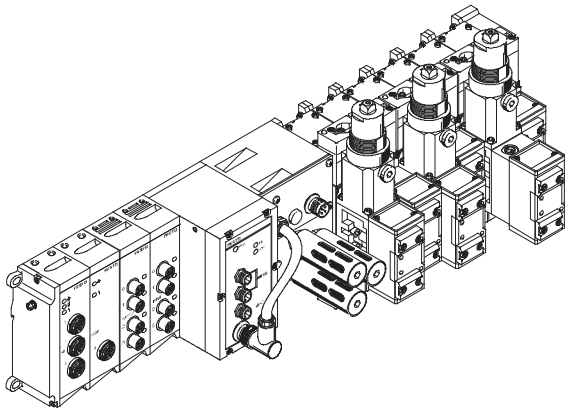

Integrated controller and fieldbus connection. Decentralised intelligence for pre-processing of autonomous subprocesses.
Valves and I/O modules as with fieldbus connection, decentralised CP systems can also be connected.

Note

Ordering

Valve terminals are equipped and assembled according to customer requirements. This results in minimal installation time. They are fully inspected before shipment and only need to be mounted with a few screws – ready to go.

A valve terminal type 04B with fieldbus connection and control block always consists of two order codes:

04P-... (pneumatic components)
04E-... (electrical components)

Ordering system for type 04B
Pneumatic components
➔ Internet: type 04 iso

Electrical peripherals
➔ Internet: type 04

Technical data
➔ Internet: type 04 iso

Valve terminals type 04 VIMP-/VIFB-04, ISO 5599/2

Key features

CP string extension from the CPX system

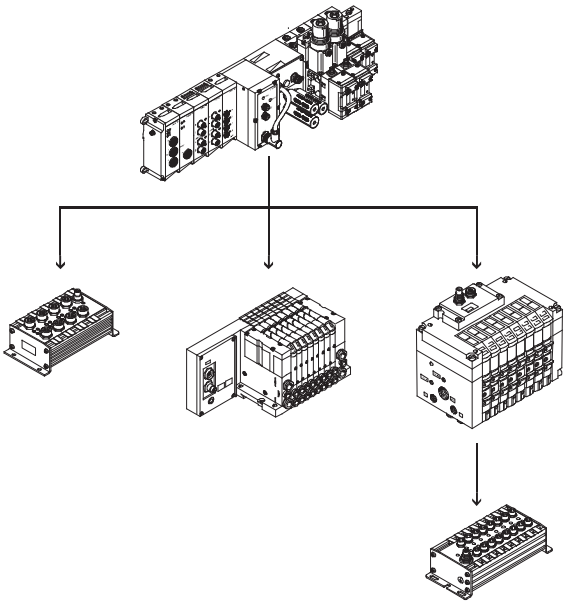

The optional string extension enables additional valve terminals and I/O modules to be connected to the fieldbus node of the CPX terminal. Different input and output modules as well as CPV-SC, CPV and CPA valve terminals can be connected.
The maximum length of the CP string extension is 10 metres, which means that the extension modules can be mounted directly on-site. All of the required electrical signals are transmitted via the CP cable, which in turn means that no further installation is needed on the extension module.

The CP string interface offers:

- 16 input signals
- 16 output signals for output modules 24 V DC or solenoid coils
- Logic and sensor supply for the input modules
- Load voltage supply for the valve terminals
- Logic supply for the output modules

➔ Internet: ctec

Type discontinued
Available up until 2012

Valve terminals type 04 VIMP-/VIFB-04, ISO 5599/2

Peripherals overview

Complete overview of modules

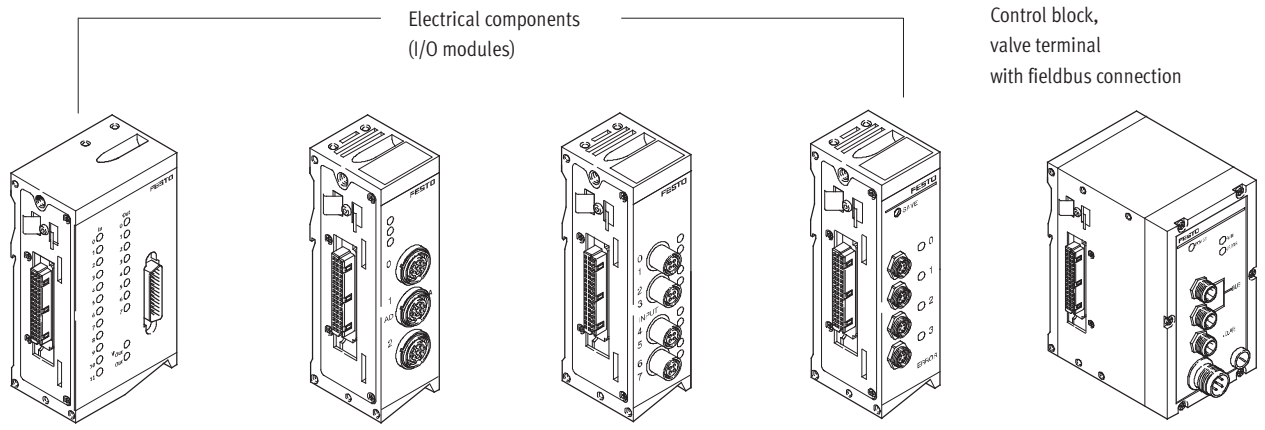

Electrical components (I/O modules)

Flexible connection to the controller thanks to an extensive range of connection nodes:
- Multi-pin plug connection
- Fieldbus connection

Stand-alone solutions with integrated PLC (control block)

Electrical digital inputs/outputs
- Max. 12 modules in combination with suitable nodes (see ordering data)
- Inputs for 24 V DC sensors, PNP or NPN outputs for small consuming devices 24 V DC

Proportional pneumatic components
- Analogue modules optimised for proportional valves, e.g. for Festo MPYE and MPPES for regulating the force of a cylinder
- To detect and control/regulate universal analogue variables (4 ... 20 mA or 0 ... 10 V) within the process – locally to IP65

Optimising and expanding applications
- Modules for installation-saving connection using sturdy Sub-D plugs in IP65
- Low-cost connections to input/output stations and operator units
- Modules for connecting decentralised CPV and CPA valve terminals
- Extensions and supplements can be added at any time

Easy mounting
- Small number of screws
- On mounting surface
- Wall mounting from rear
- With covers for welding environments

Simple servicing
- LED indicator
- Manual override

Easy maintenance
- Clip-on inscription labels

Convenient diagnostics via fieldbus connection and integrated PLC:
- Status bits
- Diagnostic bits
- Integrated self-test

Note

Detailed information on electrical peripherals
➔ Internet: type 04

Valve terminals type 04 VIMP-/VIFB-04, ISO 5599/2

Peripherals overview

Complete overview of modules

ISO 5599/2 size 1, 2 or 3

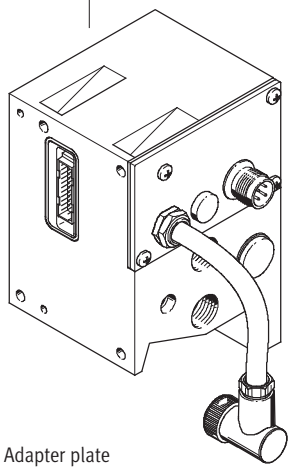

Adapter plate

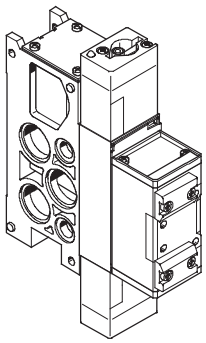

Valve with manifold sub-base

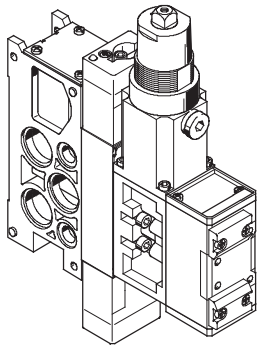

Vertical stacking module

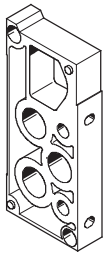

End plate

Pneumatic components

Pneumatic modules
- Manifold sub-base for ISO valves
- Size 1: (G¼) 1,200 l/min
- Size 2: (G⅜) 2,300 l/min
- Size 3: (G½) 4,500 l/min

Adapter plate
- Supply of operating voltages
- Pressure supply connection duct 1
- Exhaust connection duct 3/5
- External pilot air supply connection (optional)

Pneumatic modules
- Manifold sub-base for one ISO valve
- Pilot control via intermediate solenoid plate
- Size 1 – size 2 – size 3

Combinations for vertical stacking
- Valves
- Flow control plates
- Intermediate pressure regulator plates
- Pressure gauges
- Creation of pressure zones with 16 bar or vacuum (with external pilot air supply only)

Information on valve activation
- All intermediate solenoid plates feature a non-detenting manual override
- Valves with internal pilot air supply: pressure range limited
- Valves with external pilot air supply: pressure zones up to 16 bar or vacuum operation possible. In this case, the pilot air supply must be regulated and supplied externally

Additional modules
- Flow control plates: one-way flow control valves can be mounted between the manifold sub-base and the valve so that the speed of travel can be set separately for single and double-acting cylinders
- Pressure regulators: intermediate pressure regulator plates for setting the contact pressure of a cylinder, either separately on duct 1, 2 or 4, or shared by 2 and 4
- Pressure gauge on pressure regulator

Proportional pneumatic components
- Proportional valves can be connected via the electrical analogue modules

Flexible compressed air supply
- Compressed air supply via the adapter plate or the right-hand end plate
- With large valve terminals, compressed air can be supplied at both sides
- Creation of pressure zones: multiple pressure zones, up to 16 bar as well as for vacuum, are possible for all valve sizes. Compressed air supply at both sides is essential in this case
- Regulated external pilot air supply should be used for pressures › 10 or ‹ 3 bar.

Options
- Spare positions for subsequent extensions
- All connections can also be supplied with an NPT thread

Service
- Multiple valve sizes possible on a single terminal (on request)
- All valves can be replaced quickly and easily
- All intermediate valve plates are supplied with 1 or 2 LEDs
- Online valve terminal configurator available in the electronic catalogue or on the Internet

Valve terminals type 04 VIMP-/VIFB-04, ISO 5599/2

Peripherals overview

Valve terminal pneumatic components

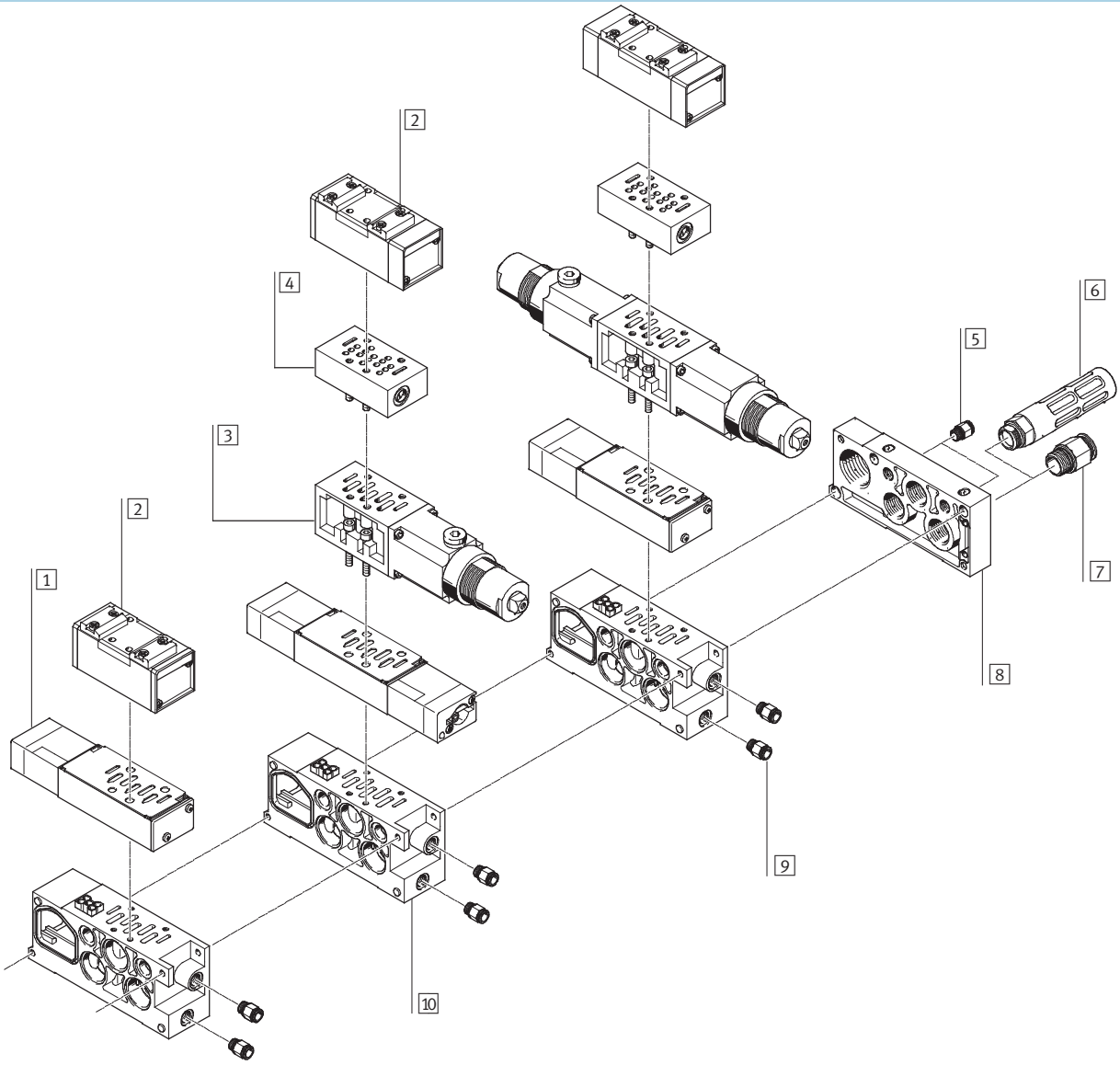

		Brief description	➔ Page/Internet
1	Intermediate solenoid plate	For pneumatically actuated standard valves	35
2	Valve	Pneumatically actuated standard valve	35
3	Intermediate pressure regulator plate	–	36
4	Flow control plate	For exhaust air flow control	36
5	Fitting	For pilot air	qs
6	Silencer	For exhaust air	u
7	Fitting	For compressed air supply	qs
8	End plate	Right-hand end plate	type 04 iso
9	Fitting	For supply air	qs
10	Manifold sub-base	For linking the valve terminal	36

Valve terminals type 04 VIMP-/VIFB-04, ISO 5599/2

Peripherals overview

FESTO

Valve terminal with multi-pin plug connection

Order code:
- 41P

Valve terminals with multi-pin plug connection can be expanded by up to 14 valves with max. 28 solenoid coils.

The following multi-pin plug connections to IP65 are available:
- 40-pin Harting plug
- 11-pin or 31-pin round plug

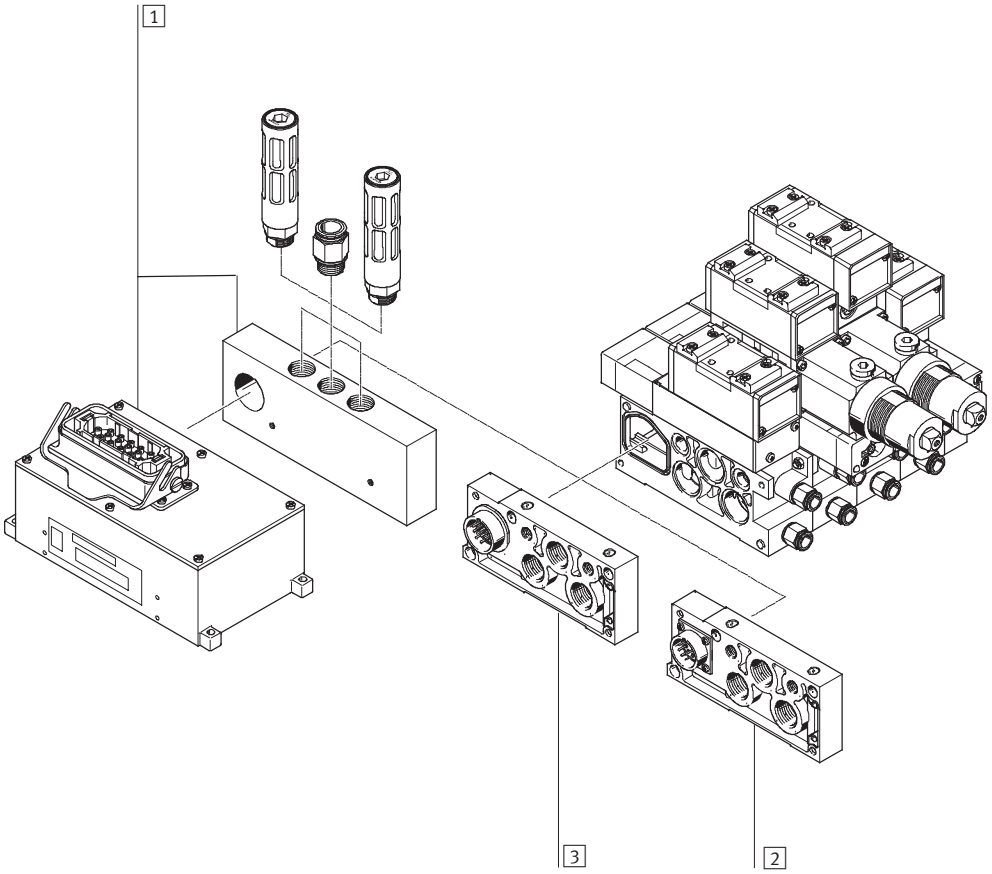

	Brief description	➔ Page/Internet
1 Multi-pin plug connection	40-pin with Harting plug	type 04 iso
2 Multi-pin plug connection	11-pin with round plug	type 04 iso
3 Multi-pin plug connection	31-pin with round plug	type 04 iso

Valve terminals type 04 VIMP-/VIFB-04, ISO 5599/2

Peripherals overview

FESTO

Valve terminal with fieldbus connection, electrical peripherals type 04

Order code:
- 04E for the electrical peripherals
- 04P for the pneumatic components

Valve terminals with fieldbus interface can be expanded by max. 26 solenoid coils.

Each valve position can be equipped with any valve or a blanking plate.

In general:
- Max. 12 electrical modules
- Digital inputs/outputs
- Analogue inputs/outputs

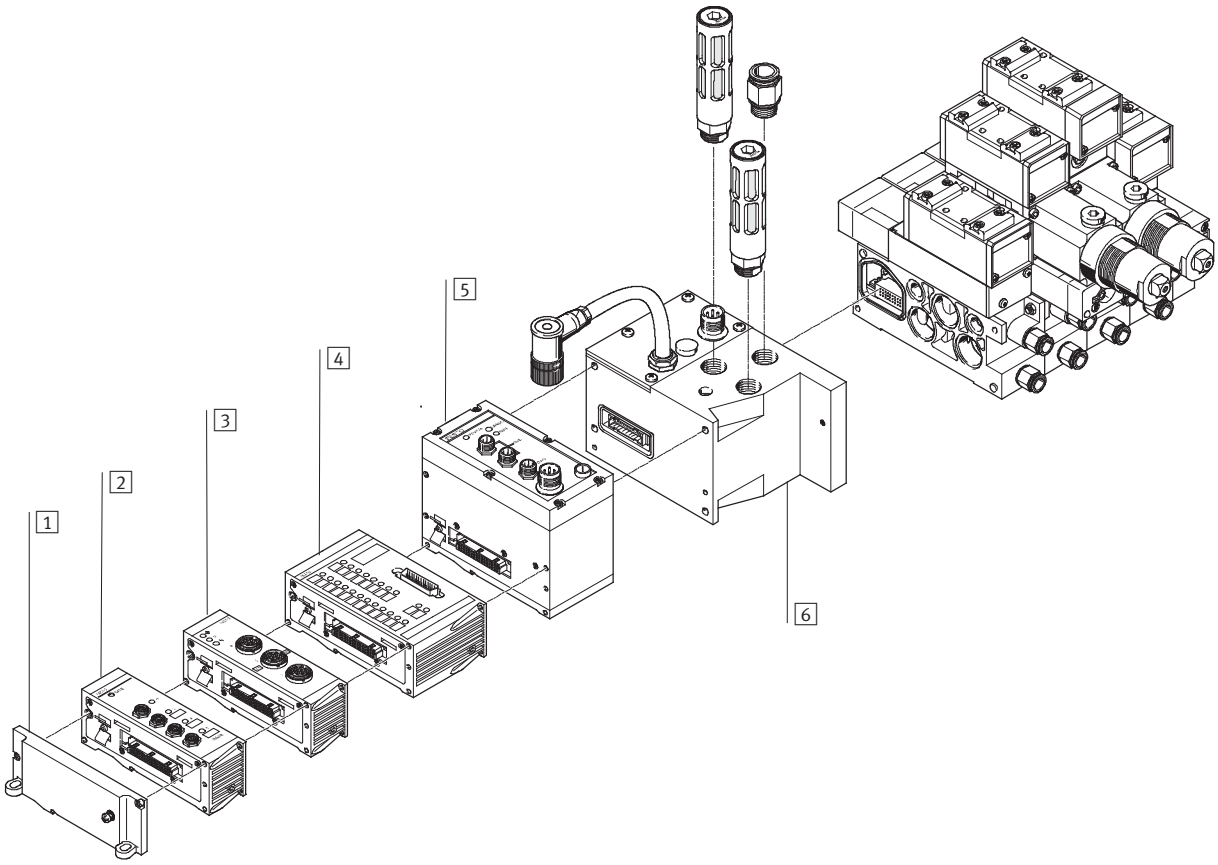

		Brief description	➔ Page/Internet
1	Left-hand end plate	–	type 04 iso
2	Input or output module	–	type 04 iso
3	Input or output module	–	type 04 iso
4	Input/output module	–	type 04 iso
5	Bus node	–	type 04 iso
6	Adapter plate	–	type 04 iso

Valve terminals type 04 VIMP-/VIFB-04, ISO 5599/2

Peripherals overview

FESTO

Type 04-B ISO pneumatic modules

Connecting, display and operating elements

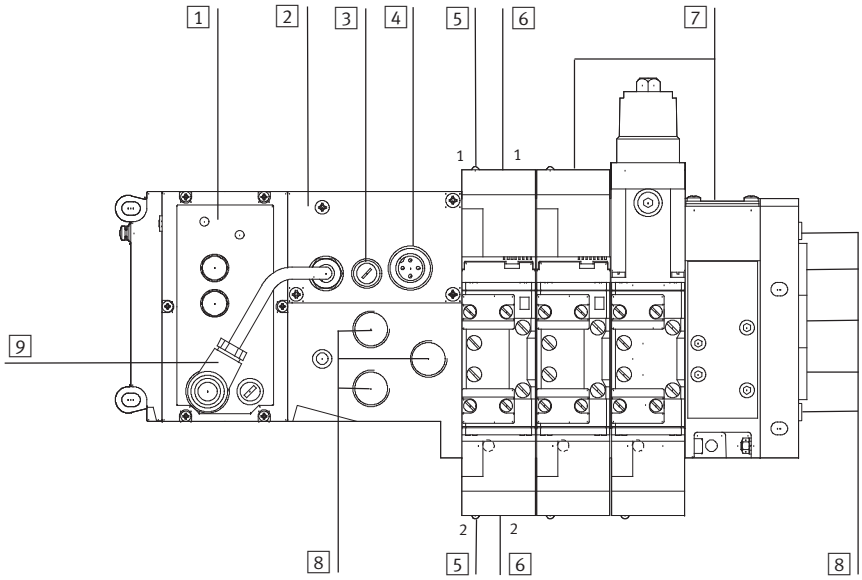

1 Control block
2 Adapter plate
3 Fuse for valves
4 Power supply connection
5 Yellow LED
1 – per pilot solenoid coil 14
2 – per pilot solenoid coil 12
6 Manual override
1 – per pilot solenoid coil 14, non-detenting
2 – per pilot solenoid coil 12, non-detenting
7 Fuse 0.315 A, protected by a cover (per pilot solenoid coil)
8 Pneumatic connections on right-hand end plate/adapter plate
9 Adapter cable for supplying power to the node and the I/O modules

Valve terminals type 04 VIMP-/VIFB-04, ISO 5599/2

Key features – Pneumatic components

FESTO

Valve terminal type 04

Blanking plates

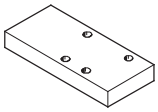

Blanking plates are used to close off vacant valve positions.
No intermediate solenoid plate is mounted underneath the blanking plate. This depends on the valve used and must be ordered with the valve if the terminal is expanded at a later date.

Valves and pilot control

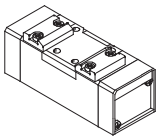

The valves used are pneumatically actuated standard valves that are controlled by means of an intermediate solenoid plate.

Valves and flow lines

The selection of pilot air supply is made at the intermediate solenoid plate by configuring two plugs. Air can be taken from the supply air, or from a separate air supply. A separate pilot air supply is required in principle if supply pressure is less than 3 bar (including vacuum) or greater than 10 bar.
In this case it is advisable to restrict the pilot air supply to max. 10 bar with a suitable regulator.

Flow classes that can be realised

Valve	Connection sizes for manifold sub-bases		
	G¼	G⅜	G½
Size 1	1,200 l/min	–	–
Size 2	–	2,300 l/min	–
Size 3	–	–	4,500 l/min

Valve terminals type 04 VIMP-/VIFB-04, ISO 5599/2

Key features – Pneumatic components

Valve function							
Code	Circuit symbol	Description	ISO	Type	Part No.		
					Valves	Intermediate solenoid plates	
						24 V DC	120 V AC
M	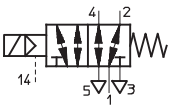	5/2-way valve • With intermediate solenoid plate • Mechanical spring	1 2 3	**MUH-5/2-D-1-FR-C-VI** **MUH-5/2-D-2-FR-C-VI** **MUH-5/2-D-3-FR-C-VI**	**151014** **151844** **151863**	**34927** **34931** **34934**	**34929** **34932** **34936**
L	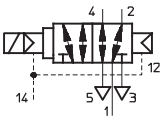	5/2-way valve • With intermediate solenoid plate • Pneumatic spring	1 2 3	**MUH-5/2-D-1-L-C-VI** **MUH-5/2-D-2-L-C-VI** **MUH-5/2-D-3-L-C-VI**	**151009** **151845** **151864**	**34927** **34931** **34934**	**34929** **34932** **34936**
		5/2-way valve • With intermediate solenoid plate • Pneumatic spring • External pilot air supply	1 2 3	**MUH-5/2-D-1-L-S-C-VI** **MUH-5/2-D-2-L-S-C-VI** **MUH-5/2-D-3-L-S-C-VI**	**151009** **151845** **151864**	**151713** **151714** **151715**	**–** **–** **–**
J	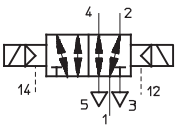	5/2-way valve, double solenoid • With intermediate solenoid plate	1 2 3	**JMUH-5/2-D-1-C-VI** **JMUH-5/2-D-2-C-VI** **JMUH-5/2-D-3-C-VI**	**151007** **151846** **151865**	**34928** **34437** **34935**	**34930** **34933** **34937**
D	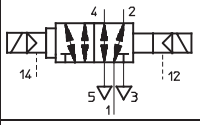	5/2-way valve, double solenoid • With intermediate solenoid plate • Dominant signal	1 2 3	**JDMUH-5/2-D-1-C-VI** **JDMUH-5/2-D-2-C-VI** **JDMUH-5/2-D-3-C-VI**	**151008** **151847** **151866**	**34928** **34437** **34935**	**34930** **34933** **34937**
G	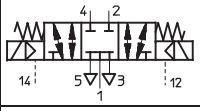	5/3-way valve • With intermediate solenoid plate • Mid-position closed	1 2 3	**MUH-5/3G-D-1-C-VI** **MUH-5/3G-D-2-C-VI** **MUH-5/3G-D-3-C-VI**	**151010** **151848** **151867**	**34928** **34437** **34935**	**34930** **34933** **34937**
E	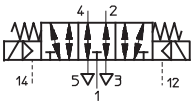	5/3-way valve • With intermediate solenoid plate • Mid-position exhausted	1 2 3	**MUH-5/3E-D-1-C-VI** **MUH-5/3E-D-2-C-VI** **MUH-5/3E-D-3-C-VI**	**151011** **151849** **151868**	**34928** **34437** **34953**	**34930** **34933** **34937**
B	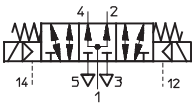	5/3-way valve • With intermediate solenoid plate • Mid-position pressurised	1 2 3	**MUH-5/3B-D-1-C-VI** **MUH-5/3B-D-2-C-VI** **MUH-5/3B-D-3-C-VI**	**151012** **151850** **151869**	**34928** **34437** **34935**	**34930** **34933** **34937**
A	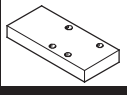	Blanking plate	1 2 3	**IAP-04-D-1** **IAP-04-D-2** **IAP-04-D-3**	**30430** **36111** **36121**	**–** **–** **–**	**–** **–** **–**

Note

A filter must be installed upstream of valves operated in vacuum mode. This prevents any foreign matter in the intake air getting into the valve (e.g. when operating a suction cup).

Valve terminals type 04 VIMP-/VIFB-04, ISO 5599/2

Key features – Pneumatic components

Vertical stacking

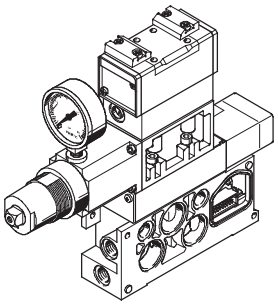

Additional components can be added to each valve position between the sub-base and the valve. These functions are known as vertical stacking modules, and enable special functioning or control of an individual valve position.

Vertical stacking components

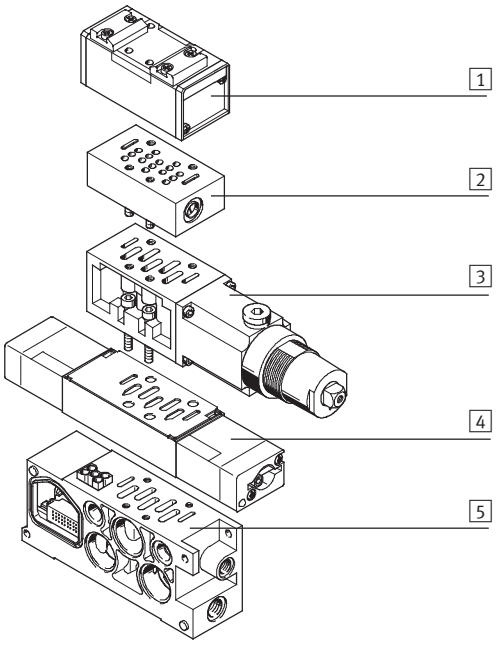

1. ISO valve
2. Flow control plate
3. Intermediate pressure regulator plate
4. Intermediate solenoid plate
5. Manifold sub-base with port pattern to DIN ISO 5599/2

Note

Certain combinations are not possible due to the design of the individual vertical stacking components.

Valve terminals type 04 VIMP-/VIFB-04, ISO 5599/2

Key features – Pneumatic components

FESTO

Flow control plate

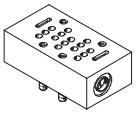

Intermediate plate with integrated exhaust air restrictors at ports 3 and 5 for regulating cylinder speed.

Intermediate pressure regulator plate and pressure gauge

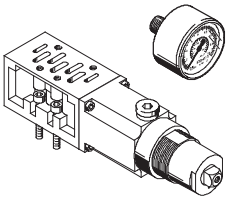

Intermediate plate with integrated pressure regulator for regulating pressure at

- port 2 and 4 (B, A)
- port 4 (A)
- port 2 (B)
- port 1 (P)

Easy pressure adjustment
Pressure gauges can be screwed directly into the intermediate pressure regulator plate to adjust the pressure.

Function

Code	Circuit symbol	Description	ISO	Type
X	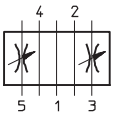	Flow control plate (with two one-way flow control valves for exhaust air flow control)	1 2 3	**GRO-ZP-1-ISO-B** **GRO-ZP-2-ISO-B** **GRO-ZP-3-ISO-B**
P	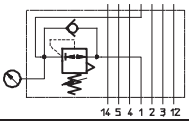	Pressure regulator intermediate plate, port 1	1 2 3	**LR-ZP-P-D-1** **LR-ZP-P-D-2** **LR-ZP-P-D-3**
R	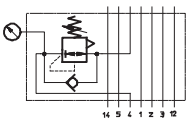	Pressure regulator intermediate plate, port 4	1 2 3	**LR-ZP-A-D-1** **LR-ZP-A-D-2** **LR-ZP-A-D-3**
S	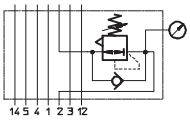	Pressure regulator intermediate plate, port 2	1 2 3	**LR-ZP-B-D-1** **LR-ZP-B-D-2** **LR-ZP-B-D-3**
Q	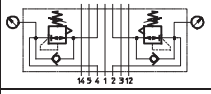	Pressure regulator intermediate plate, ports 2 and 4	1 2 3	**LR-ZP-A/B-D-1** **LR-ZP-A/B-D-2** **LR-ZP-A/B-D-3**
V		Isolating disc for creating pressure zones	1 2 3	**NSC-04-D-1** **NSC-04-D-2** **NSC-04-D-3**
T		Pressure gauge for regulator, max. 10 bar	–	**MA-40-10-⅛-EN**
U		Pressure gauge for regulator, max. 16 bar	–	**MA-40-16-⅛-EN**

Valve terminals type 04 VIMP-/VIFB-04, ISO 5599/2

Key features – Pneumatic components

FESTO

Manifold sub-base

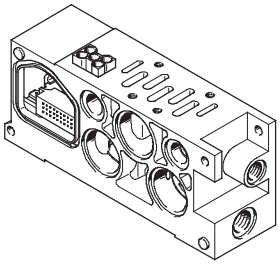

The valve terminal type 04 is based on a modular system which consists of manifold sub-bases and valves. Manifold sub-bases are available for valves of width 43 mm, 59 mm and 72 mm. The manifold sub-bases contain a ducting seal and an electrical interlinking module. The manifold sub-bases are screwed together and thus form the support system for the valves.

Inside the manifold sub-bases are the connection ducts for supplying compressed air to and venting from the valves on the terminal as well as the working lines for the pneumatic cylinders for each valve.

Each manifold sub-base is connected to the next using two screws. Individual terminal sections can be isolated and further manifold sub-bases inserted by loosening these screws. This ensures that the valve terminal can be rapidly and reliably extended.

Port patterns to ISO 5599/2 on the manifold sub-base

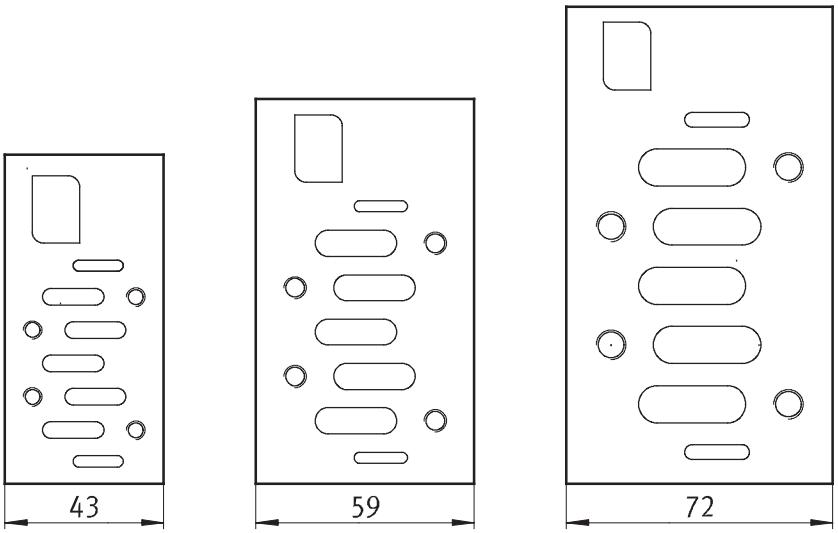

Valve terminals type 04 VIMP-/VIFB-04, ISO 5599/2

Key features – Pneumatic components

FESTO

Compressed air supply and venting

Right-hand end plate

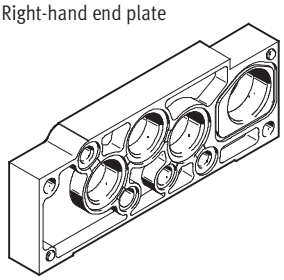

The valve terminal type 04 is supplied with compressed air via the right-hand end plate and/or the adapter plate.

Venting is via silencers or ports for ducted exhaust air on the adapter plate and/or at the right-hand end plate.

Pilot air supply

The port for the compressed air supply is located on the adapter plate or the right-hand end plate.

Internal pilot air supply
Internal pilot air supply can be selected if the working pressure is between 3 and 10 bar.
The pilot air supply is then branched from the compressed air supply 1 using an internal connection. Ports 12 and 14 on the right-hand end plate are sealed with a blanking plug.

External pilot air supply
If the working pressure is not within the range from 3 to 10 bar, you must operate your valve terminal type 04 using external pilot air supply. The pilot air supply is then supplied via ports 12 and 14 on the right-hand end plate.

Note

If a gradual pressure build-up is required in the system by means of a soft-start valve, then external pilot air should be selected whereby the pilot pressure is already applied at the point of switch-on.

Creating pressure zones

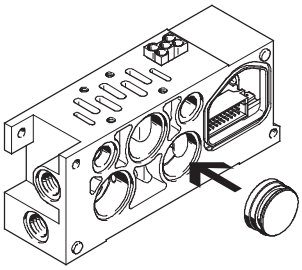

Different supply pressures are made possible within a single valve terminal by inserting an isolating disc between two manifold sub-bases. In doing so, the isolating disc must be inserted from the right into the sub-base. Supply and exhaust are effected on the left side via the adapter plate between the sub-base and the fieldbus node, and via the right-hand end plate. Usually, only duct 1 has to be isolated. In special cases an isolating disc can also be inserted into exhaust ducts 3 and 5.

Sample scenario for creation of pressure zones

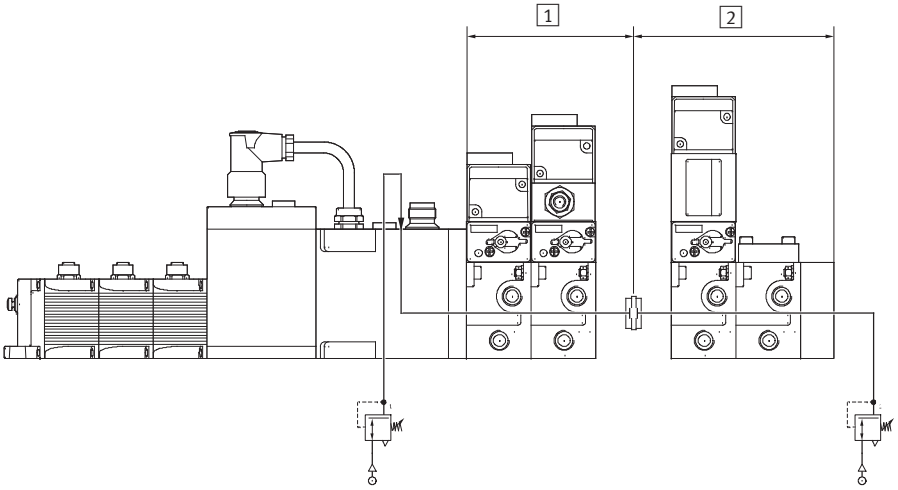

Note

When exhausting a pressure zone (e.g. in the event of an EMERGENCY-STOP), the external regulator should never be unpressurised, as this would mean that there is no pilot air supply for the other pressure zones.

Terminal with two different pressure zones
1 Pressure zone 1
2 Pressure zone 2

Valve terminals type 04 VIMP-/VIFB-04, ISO 5599/2

Key features – Electrical components

FESTO

Electrical connection

Multi-pin plug connection MP3 (Harting plug)

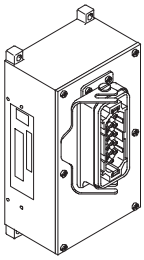

Plug in sturdy industrial design for up to 14 valves/28 coils.

Activation:
- 24 V DC
- 120 V AC

Pre-assembled cables are available.

Multi-pin plug connection MP4 (round plug from Electrivert)

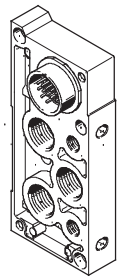

Plug in low-cost industrial design for up to 14 valves/28 coils, 11-pin or 31-pin.

Activation:
- 24 V DC
- 120 V AC

Pre-assembled cables are available on request.

Pin allocation MP3 – Harting plug

	Plug view	Valve number	Pin	Solenoid coil	Valve number	Pin
Multi-pin plug connection, 40-pin						
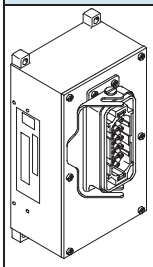	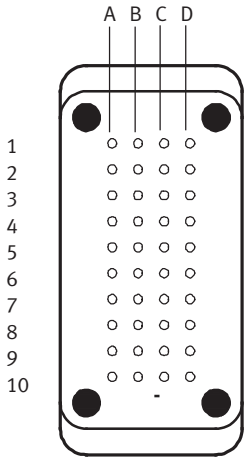	1 1	A1 A2	b a	11 11	C1 C2
		2 2	A3 A4	b a	12 12	C3 C4
		3 3	A5 A6	b a	13 13	C5 C6
		4 4	A7 A8	b a	– –	C7 C8
		5 5	A9 A10	b a	– –	C9 C10
		6 6	B1 B2	b a	– –	D1 D2
		7 7	B3 B4	b a	– –	D3 D4
		8 8	B5 B6	b a	– –	D5 D6
		9 9	B7 B8	b a	– –	D7 D8
		10 10	B9 B10	b a	– –	
				COM COM	0 V 0 V	D9 D10
			Output (solenoid valve position)			

Valve terminals type 04 VIMP-/VIFB-04, ISO 5599/2

Key features – Electrical components

FESTO

Pin allocation MP4 – Round plug from Electrivert

Plug view	Pin	Solenoid coil	Valve number
Multi-pin plug connection, 31-pin			
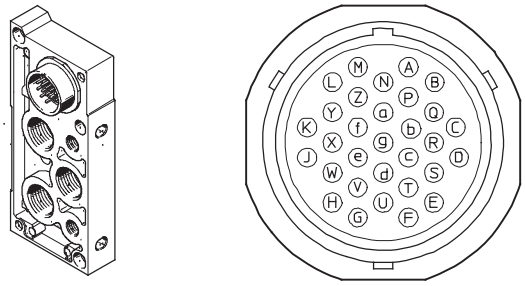	A	b	1
	B	a	1
	C	b	2
	D	a	2
	E	b	3
	F	a	3
	G	b	4
	H	a	4
	J	b	5
	K	a	5
	L	b	6
	M	a	6
	N	b	7
	P	a	7
	Q	b	8
	R	a	8
	S	b	9
	T	a	9
	U	b	10
	V	a	10
	W	b	11
	X	a	11
	Y	b	12
	Z	a	12
	a	COM	0 V (valves 1 and 2)
	b	COM	0 V (valves 3 and 4)
	c	COM	0 V (valves 5 and 6)
	d	COM	0 V (valves 7 and 8)
	e	COM	0 V (valves 9 and 10)
	f	COM	0 V (valves 11 and 12)
	g	Earthing	
	Plug body	Earthing	
Multi-pin plug connection, 11-pin			
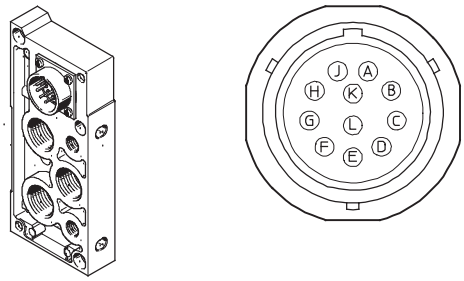	A	b	1
	B	a	1
	C	b	2
	D	a	2
	E	b	3
	F	a	3
	G	b	4
	H	a	4
	J	COM	0 V (valves 1 and 2)
	K	COM	0 V (valves 3 and 4)
	L	Earthing	
	Plug body	Earthing	

Function

Code		Description	Type
Y		Multi-pin plug socket for MP3, Harting plug, 40-pin	**IMP1-SD-40**
–		Multi-pin plug socket for MP4, round plug, max. 4 valves	**IMP4-SD-11**[1)]
–		Multi-pin plug socket for MP4, round plug, max. 14 valves	**IMP4-SD-31**[1)]

1) Multi-pin plug socket and cable for MP4, round plug, IMP4-SD-11 (max. 4 valves) and IMP4-SD-31 (max. 14 valves) on request

Valve terminals type 04 VIMP-/VIFB-04, ISO 5599/2

Key features – Electrical components

FESTO

Electrical installation

Connecting the power supply

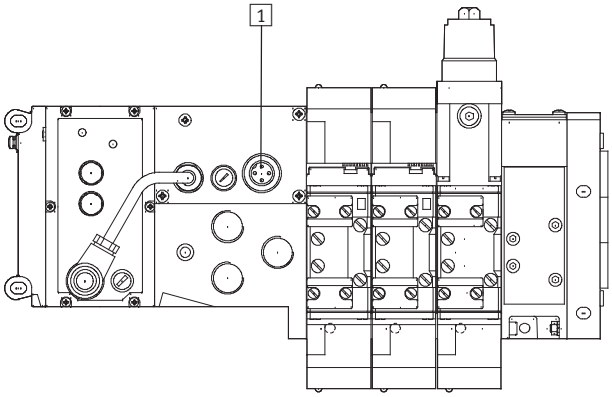

1 Power supply type 04B

The following valve terminal components are supplied separately with 24 V DC via the power supply connection:

- Operating voltage for internal electronics and the inputs of the input modules (pin 1: 24 V DC, tolerance ±25%, external fuse M 3.15 A recommended).
- Load voltage for the outputs of the valves and the output modules (pin 2: 24 V DC, tolerance ±10%, external fuse max. 10 A (slow-blow) required).

Note

Ascertain which measures, in line with your EMERGENCY STOP procedures, are necessary for putting your machine/system into a safe state in the event of an EMERGENCY STOP (e.g. switching off the operating voltage for the valves and output modules, switching off the compressed air).

Example of circuit (power supply type 04B – internal structure)

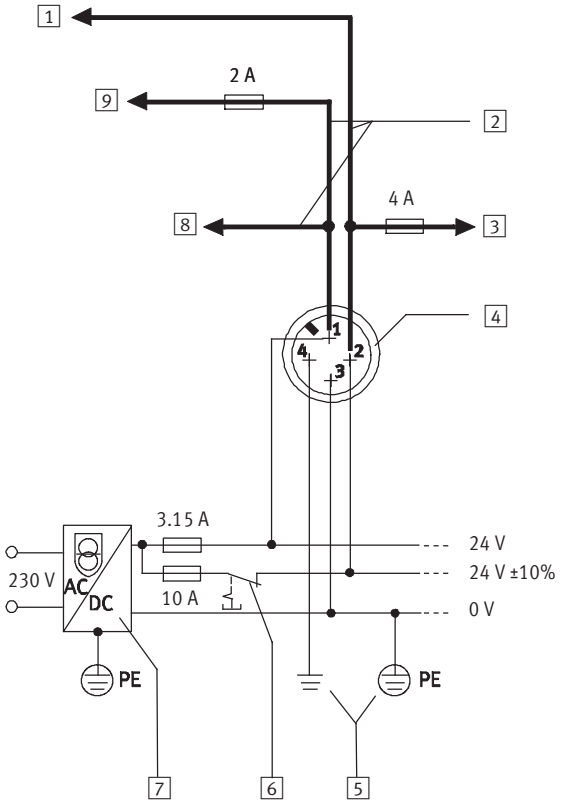

1 Electrical outputs
2 Adapter cable
3 Valves max. 50% concurrence (internally fused)
4 Power supply connection adapter plate (type 04-B)
5 Equipotential bonding
6 Load voltage, can be disconnected separately
7 Power supply unit (e.g. central power supply)
8 24 V electronics
9 Electrical inputs/sensors (internally fused)

Valve terminals type 04 VIMP-/VIFB-04, ISO 5599/2

Key features – Electrical components

Electrical connection concept

Replacing the solenoid coil fuse

Each solenoid coil is protected with a (fast-blowing) 0.315 A fuse. These fuses are located on the printed circuit board behind the manifold block cover. Each single solenoid manifold block has one fuse, whereas each double solenoid manifold block has two.

Note

Make sure that there is sufficient clearance for maintenance purposes.

Changing the solenoid coil fuse

1. Loosen the mounting screws on the cover
2. Carefully remove the fuse from the socket.
   Right fuse for valve solenoid 14
   Left fuse for valve solenoid 12

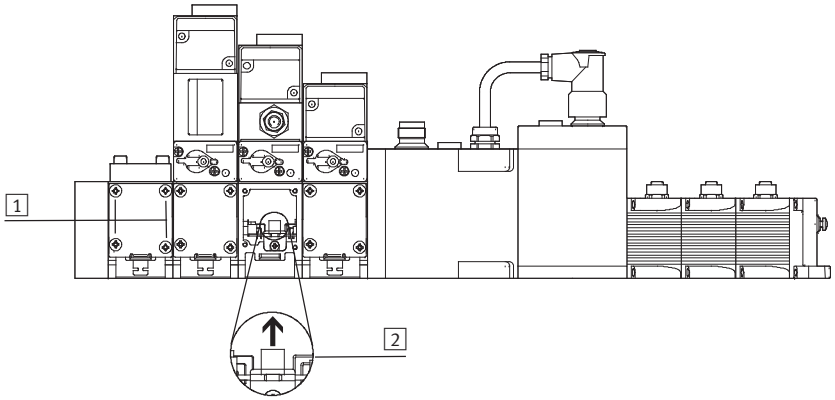

Manual override (MO)

Manual override with automatic return (non-detenting)

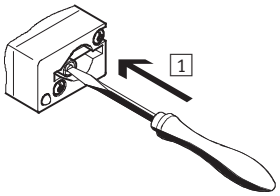

1. Press in the stem of the manual override using a pin or screwdriver.
   Valve is then switched.

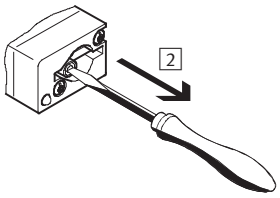

2. Remove the pin or screwdriver. Spring force pushes the stem of the manual override back. Valve returns to its initial position (not with double solenoid valve code J, D).

Valve terminals type 04 VIMP-/VIFB-04, ISO 5599/2

Key features – Assembly

FESTO

Rear side mounting

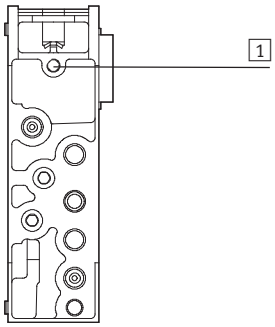

1 Blind hole for rear side mounting

The rear side of the manifold sub-bases has holes (blind holes) for mounting the valve terminal on machines or metal racks (rear side mounting).

Threads must be cut for this purpose:
- ISO size 1: M5
- ISO size 2: M6
- ISO size 3: M8

Wall mounting type 04-B

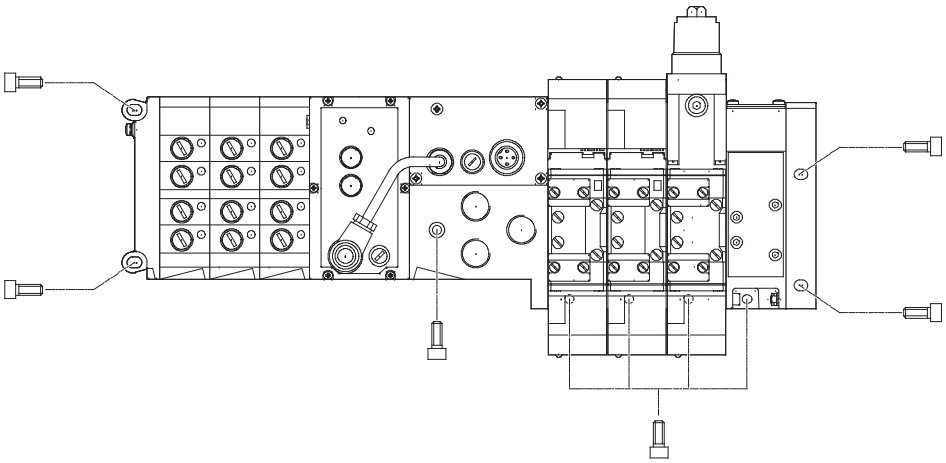

- Two screws M6 at the left-hand end plate
- With screws M6 (size 1 and size 2) or M8 (size 3) at the adapter plate, the manifold sub-bases and the right-hand end plate

The following additional mounting options are available:
- Holes (blind holes) on the underside of the manifold sub-bases
- The additional mounting bracket for the modules in the case of terminals with multiple I/O modules

Valve terminals type 04 VIMP-/VIFB-04, ISO 5599/2

Instructions for use

FESTO

System equipment

Operate system equipment with unlubricated compressed air if possible. Festo valves and cylinders are designed so that, if used as designated, they will not require additional lubrication and will still achieve a long service life.
The quality of compressed air downstream from the compressor must correspond to that of unlubricated compressed air. If possible, do not operate all of your system equipment with lubricated compressed air. The lubricators should, where possible, always be installed directly upstream of the actuator used.

Unsuitable additional oil and an excessive oil content in the compressed air reduce the service life of the valve terminal.
Use Festo special oil OFSW-32 or the alternatives listed in the Festo catalogue (as specified in DIN 51 524 HLP32; basic oil viscosity 32 CST at 40 °C).

Bio-oils
When using bio-oils (oils which are based on synthetic or native ester, e.g. rapeseed oil methyl ester), the maximum residual oil content of 0.1 mg/m^3 must not be exceeded (see ISO 8573-1 Class 2).

Mineral oils
When using mineral oils (e.g. HLP oils to DIN 51 524, Parts 1 through 3) or similar oils based on poly-alpha-olefins (PAO), the maximum residual oil content of 5 mg/m^3 must not be exceeded (see ISO 8573-1 Class 4).
A higher residual oil content irrespective of the compressor oil cannot be permitted, as the basic lubricant would be flushed out over time.

Type discontinued
Available up until 2012

Valve terminals type 04 VIMP-/VIFB-04, ISO 5599/2

Technical data

Flow rate
ISO 1: G¼, 1200 l/min
ISO 2: G⅜, 2300 l/min
ISO 3: G½, 4500 l/min

Valve width
ISO 1: 43 mm
ISO 2: 59 mm
ISO 3: 72 mm

Voltage
24 V DC
120 V AC

General technical data						
		Size 1		Size 2		Size 3
Constructional design						
• Valves		Piston spool valve				
• Intermediate pressure regulator plate		Pressure regulating valve with secondary exhaust				
Width	[mm]	43		59		72
Nominal size	[mm]	8		11.5		14.5
Type of mounting						
• Valves		Through-holes on manifold sub-base				
• Throttle plate		Through-holes on manifold sub-base				
• Pressure regulator		Through-holes on manifold sub-base				
Mounting position		Any				
Manual override		Non-detenting				
Pneumatic connections						
Work air connection	1	G½		G¾		G1
Exhaust connection	3/5	G½		G¾		G1
Working lines	2/4	G¼	G⅜	G⅜	G½	G½
Pilot air supply connection	12/14	G⅛		G⅛		G⅛

Valve response times [ms]								
Valve function order code		M	L	J	D	G	E	B
Size 1	on	6	9	–	–	7	7	7
	off	23	18	–	–	44	45	44
	reverse	–	–	6	–	–	–	–
Size 2	on	11	23	–	–	15	16	15
	off	39	39	–	–	56	59	57
	reverse	–	–	8	–	–	–	–
Size 3	on	13	29	–	–	17	18	16
	off	43	36	–	–	61	63	60
	reverse	–	–	8	–	–	–	–

Valve terminals type 04 VIMP-/VIFB-04, ISO 5599/2

Technical data

Operating and environmental conditions								
Valve function order code		M	L	J	D	G	E	B
Operating medium		Filtered compressed air, lubricated or unlubricated ➔ 25						
Operating pressure	[bar]	–0.9 … +10						
Operating pressure for valve terminal with internal pilot air supply	[bar]	3 … 10						
Pilot pressure	[bar]	3 … 10	2 … 10			3 … 10		
Pressure regulation range Intermediate pressure regulator plate	[bar]	0 … 12						
Ambient temperature	[°C]	–10 … +60						
Temperature of medium	[°C]	–10 … +60						
CE mark (see declaration of conformity)		To EU Low Voltage Directive						

Electrical data		
Protection against electric shock (protection against direct and indirect contact to EN 60204-1/IEC 204)		By means of PELV power supply unit (VIFB-04)
Operating voltage	[V]	24 DC ±10% / 120 AC +10/–15%
Electrical power consumption per coil	[W]	3.1 (130 mA at 24 V DC)
Duty cycle		100% (50% concurrence)
Protection class to EN 60529		IP65 (in assembled state)
Relative air humidity	[%]	90 at 40°C, non-condensing
Vibration resistance		To DIN/IEC 68/EN 60068, Parts 2-6: 0.35 mm at 25 … 57 Hz, 5 g at 57 … 150 Hz, 1 g at 150 … 200 Hz
Shock resistance		To DIN/IEC 68/EN 60068, Parts 2-27: +/–30 g at 11 ms duration
Continuous shock resistance		To DIN/IEC 68/EN 60068, Parts 2-29: +/–15 g at 6 ms, 1000 cycles

Materials	
Valves	Die-cast aluminium, steel
Valve/pressure regulator seal	Nitrile rubber
Throttle plate	Anodised aluminium, brass
Intermediate pressure regulator plate	Die-cast aluminium, steel

Valve terminals type 04 VIMP-/VIFB-04, ISO 5599/2

Technical data

Product weight [g]	Approx. weights		
	Size 1	Size 2	Size 3
Total[1)]	1200	1600	2400
Left-hand end plate	120		
Input modules	360		
Output modules	400		
Fieldbus node	1000		
Adapter plate	2280	2440	2860
Sub-base	540	640	1120
Right-hand end plate	540	640	1120
Intermediate solenoid plate	370	430	500
Valves			
• Single solenoid, double solenoid	290	550	760
• Mid-position	320	620	840
Blanking plate	100	140	180
Throttle plate	230	440	850
Pressure regulator			
• P, B, A	520	960	1120
• A/B	840	1490	1770

1) Including manifold sub-base, intermediate solenoid plate and valve

Nominal flow rate [l/min]			
	Size 1	Size 2	Size 3
Valves			
–	1200	2300	4500
Valves, pneumatically interlinked			
5/2-way valve	–	–	4000
5/3-way valve	–	–	3800, Mid-position 3500
Intermediate pressure regulator plate			
–	800	1500	1800
Manifold sub-base without valve			
Working lines G¼	1200	–	–
Working lines G⅜	2600	2300	–
Working lines G½	–	4000	4500

Valve terminals type 04 VIMP-/VIFB-04, ISO 5599/2

Technical data

FESTO

Dimensions Download CAD data ➔ **www.festo.com**

Multi-pin – Harting plug

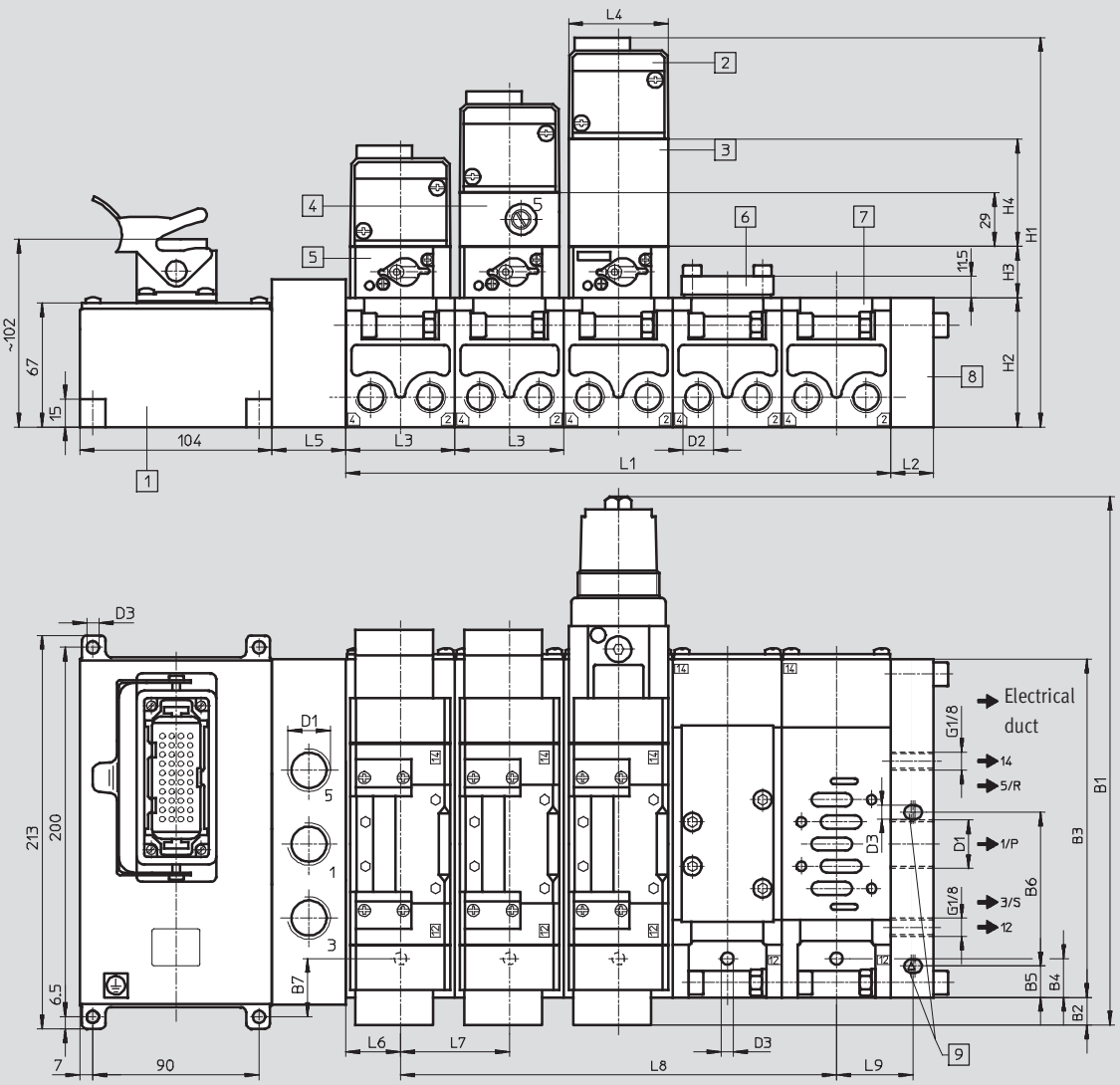

1 Multi-pin node
2 ISO valve
3 Intermediate pressure regulator plate
4 Throttle plate
5 Intermediate solenoid plate
6 Blanking plate
7 Manifold sub-base
8 End plate
9 Mounting hole only with IMP-04-D-1

Type	~B1	B2	B3	B4	B5	B6	B7	D1	D2[1]		D3
VIMP-04-1-D-1	251	33	149	7	17	80	51.5	G½	G¼	G⅜	6.6
VIMP-04-1-D-2	287	15	183	21	–	–	31.5	G¾	G⅜	G½	6.6
VIMP-04-1-D-3	315	6	230	27	–	–	9.5	G1	G½		9

Type	H1	H2	H3	H4	H5	L1[2]	L2	L3	L4	L5	L6	L7	L8[2]	L9
VIMP-04-1-D-1	182	64	27	45	25.5	nx43	22	43	42	30	9.5	43	(n-1)x43	80
VIMP-04-1-D-2	211	70	27.8	58	29	nx59	23	59	54	40	29.5	59	(n-1)x59	–
VIMP-04-1-D-3	235	82	28	63	40	nx72	28	72	70	40	36	72	(n-1)x72	–

1) Size 1 and 2 manifold sub-bases for different flow classes
2) n = number of valves

Valve terminals type 04 VIMP-/VIFB-04, ISO 5599/2

Technical data

FESTO

Dimensions Download CAD data ➔ **www.festo.com**

Multi-pin – round plug from Electrivert

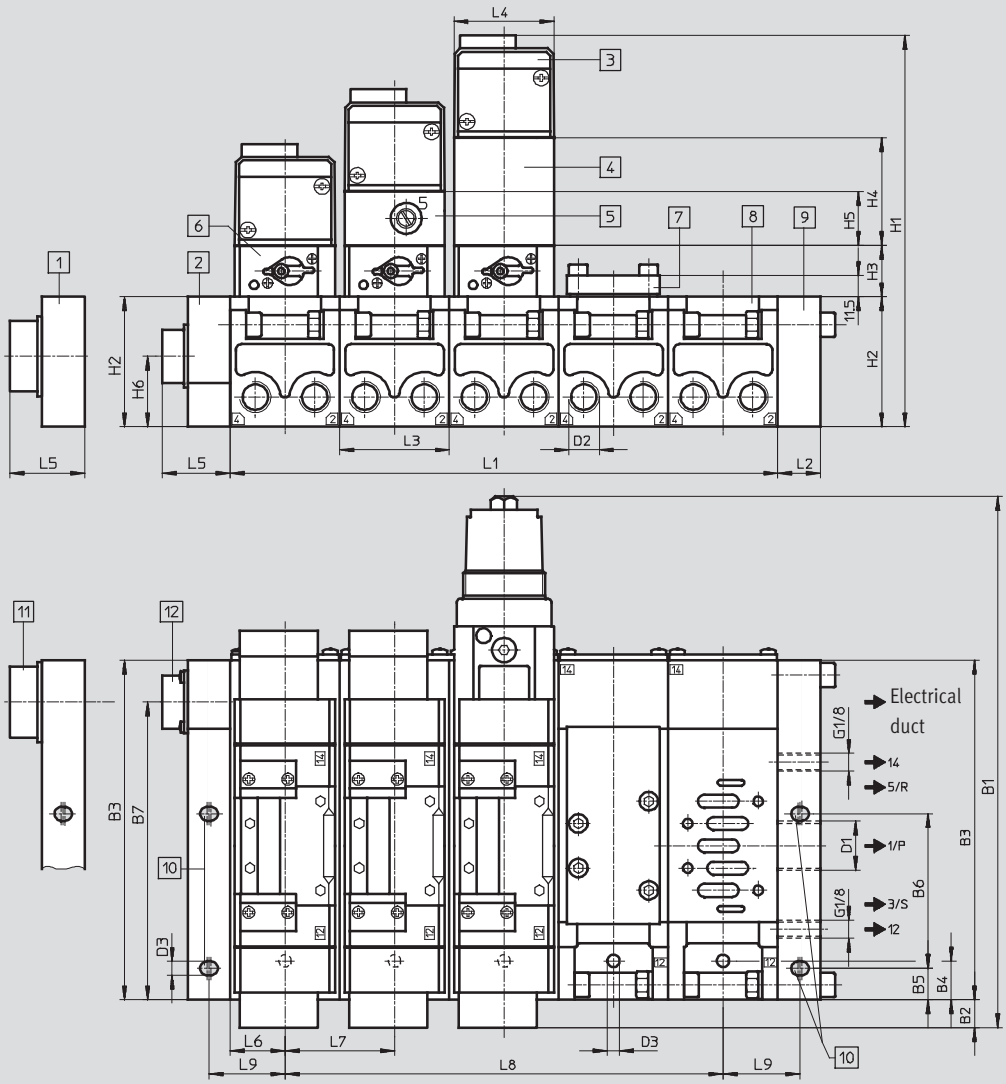

1 Multi-pin node, 31-pin, for 12 valve positions
2 Multi-pin node, 11-pin, for 4 valve positions
3 ISO valve
4 Intermediate pressure regulator plate
5 Throttle plate
6 Intermediate solenoid plate
7 Blanking plate
8 Manifold sub-base
9 End plate
10 Mounting hole only with VIMP-04-D-1
11 Round plug, 31-pin, for size 3 with adapter
12 Round plug, 11-pin

Type	~B1	B2	B3	B4	B5	B6	B7	D1	D2[1]		D3
VIMP-04-1-D-1	251	33	149	7	17	80	120	G½	G¼	G⅜	6.6
VIMP-04-1-D-2	287	15	183	21	–	–	160.5	G¾	G⅜	G½	6.6
VIMP-04-1-D-3	315	6	230	27	–	–	198	G1	G½		9

Type	H1	H2	H3	H4	H5	L1[2]	L2	L3	L4	L5		L6	L7	L8[2]	L9
										11-pin	31-pin				
VIMP-04-1-D-1	182	64	27	45	25.5	nx43	22	43	42	36	40	9.5	43	(n-1)x43	44.5
VIMP-04-1-D-2	211	70	27.8	58	29	nx59	23	59	54	37	49	29.5	59	(n-1)x59	–
VIMP-04-1-D-3	235	82	28	63	40	nx72	28	72	70	42	74	36	72	(n-1)x72	–

1) Size 1 and 2 manifold sub-bases for different flow classes
2) n = number of valves

Valve terminals type 04 VIMP-/VIFB-04, ISO 5599/2

Technical data

FESTO

Dimensions Download CAD data ➔ **www.festo.com**

Fieldbus/control block

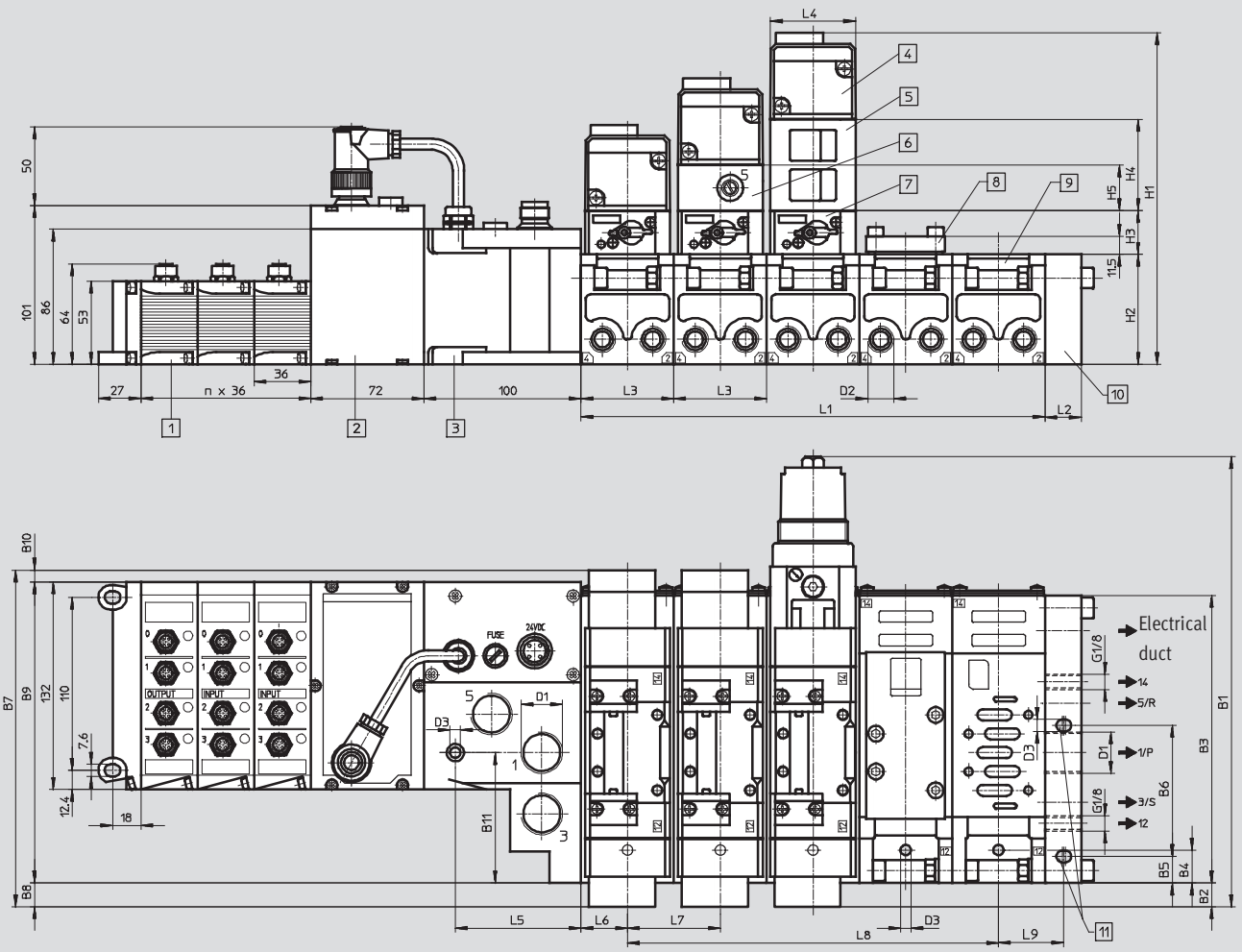

1 I/O modules -03 (n = number of I/O modules)
2 Communications node IFB/ISF3-03
3 Adapter plate
4 ISO valve
5 Intermediate pressure regulator plate
6 Throttle plate
7 Intermediate solenoid plate
8 Blanking plate
9 Manifold sub-base
10 End plate
11 Mounting hole only with VIFB-04-D-1

Type	~B1	B2	B3	B4	B5	B6	B7	B8	B9	B10	B11	D1	D2[1]		D3
VIFB-04-1-D-1-B	251	33	149	7	17	80	198.5	33	153	12.4	56.9	G½	G¼	G⅜	6.6
VIFB-04-1-D-2-B	287	15	183	21	–	–	214	15	191.5	7.5	83	G¾	G⅜	G½	6.6
VIFB-04-1-D-3-B	315	6	230	27	–	–	241.5	6	231.6	3.9	79.5	G1	G½		9

Type	H1	H2	H3	H4	H5	L1[2]	L2	L3	L4	L5	L6	L7	L8[2]	L9
VIFB-04-1-D-1-B	181.7	64	27	45	25.5	mx43	22	43	42	80	9.5	43	(m-1)x43	44.5
VIFB-04-1-D-2-B	210.8	70	27.8	58	29	mx59	23	59	54	80	29.5	59	(m-1)x59	–
VIFB-04-1-D-3-B	235	82	28	63	40	mx72	28	72	70	52	36	72	(m-1)x72	–

1) Size 1 and 2 manifold sub-bases for different flow classes
2) m = number of valves

Valve terminals type 04 VIMP-/VIFB-04, ISO 5599/2

Technical data

Dimensions Download CAD data ➔ **www.festo.com**

Size 1, 2 and 3 manifold sub-bases for different flow classes

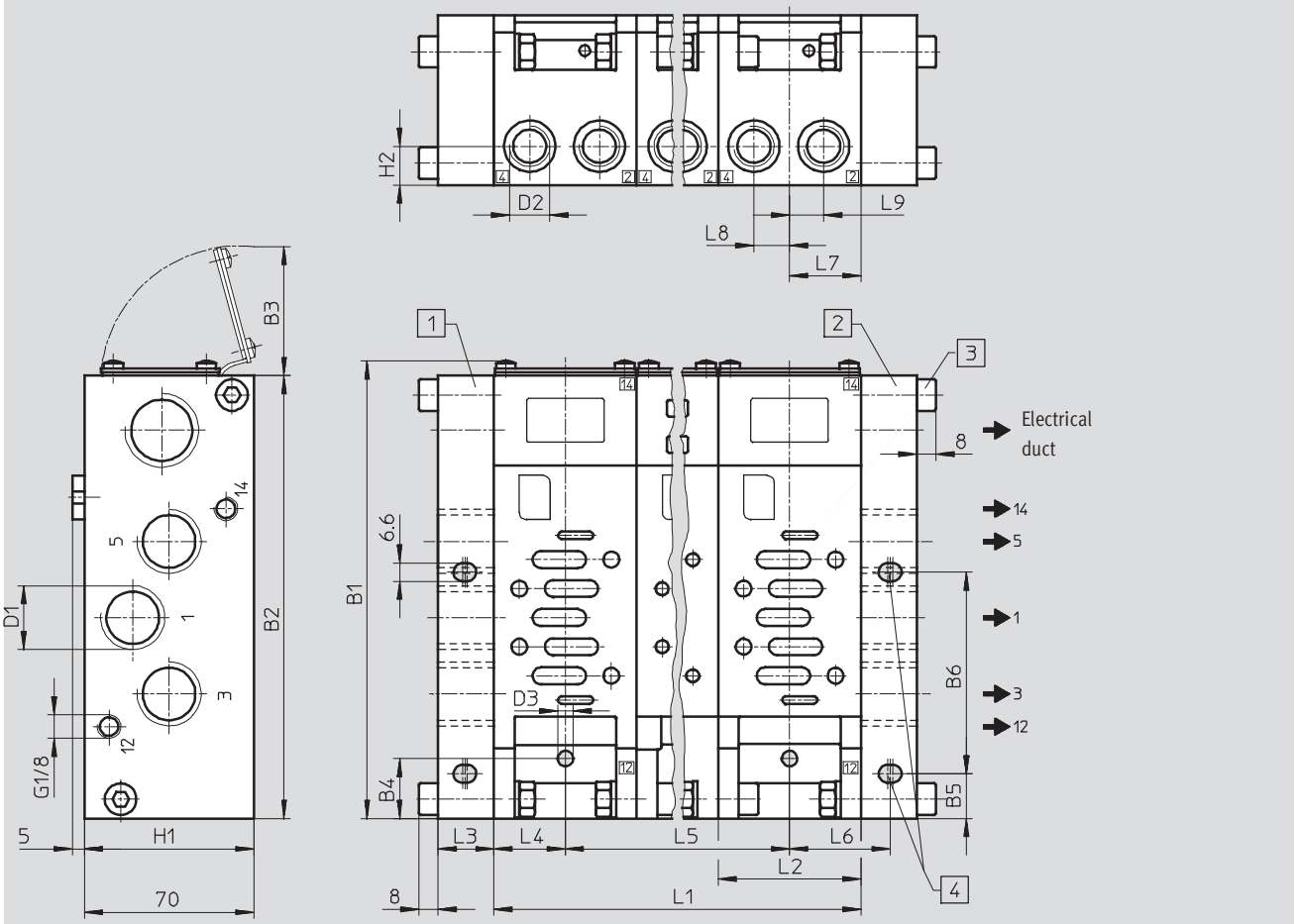

1 End plate, left-hand
2 End plate, right-hand
3 Mounting screws with VIG...-04-D-2 and VIG...-04-D-3
4 Mounting screws with VIG...-04-D-1

Type	~B1	B2	B3	B4	B5	B6	D1	D2	D3	H1	H2
VIGI/VIGK-04-D-1	149	149	50	7.5	17	80	G½	G¼	5.2	64	14.5
VIGI/VIGK-04-D-1-⅜	149	149	50	7.5	17	80	G½	G⅜	5.2	64	14.5
VIGI/VIGK-04-D-2	190	183	55	25	–	–	G¾	G⅜	6.6	70	16
VIGI/VIGK-04-D-2-½	190	183	55	25	–	–	G¾	G½	6.6	70	16
VIGI/VIGK-04-D-3	237	230	64	27	–	–	G1	G1	9.0	82	20

Type	L1[1)]	L2	L3	L4	L5[1)]	L6	L7	L8	L9
VIGI/VIGK-04-D-1	mx43	43	22	26	(n-1)x43	37	26	13	13
VIGI/VIGK-04-D-1-⅜	mx43	43	22	26	(n-1)x43	37	26	13	13
VIGI/VIGK-04-D-2	mx59	59	23	29.5	(n-1)x59	–	29.5	14.75	14.05
VIGI/VIGK-04-D-2-½	mx59	59	23	29.5	(n-1)x59	–	29.5	14.75	14.05
VIGI/VIGK-04-D-3	mx72	72	28	36	(n-1)x72	–	36	18	18

1) n = number of valves

Valve terminals type 04 VIMP-/VIFB-04, ISO 5599/2

Technical data

Dimensions Download CAD data ➔ **www.festo.com**

Intermediate pressure regulator plate

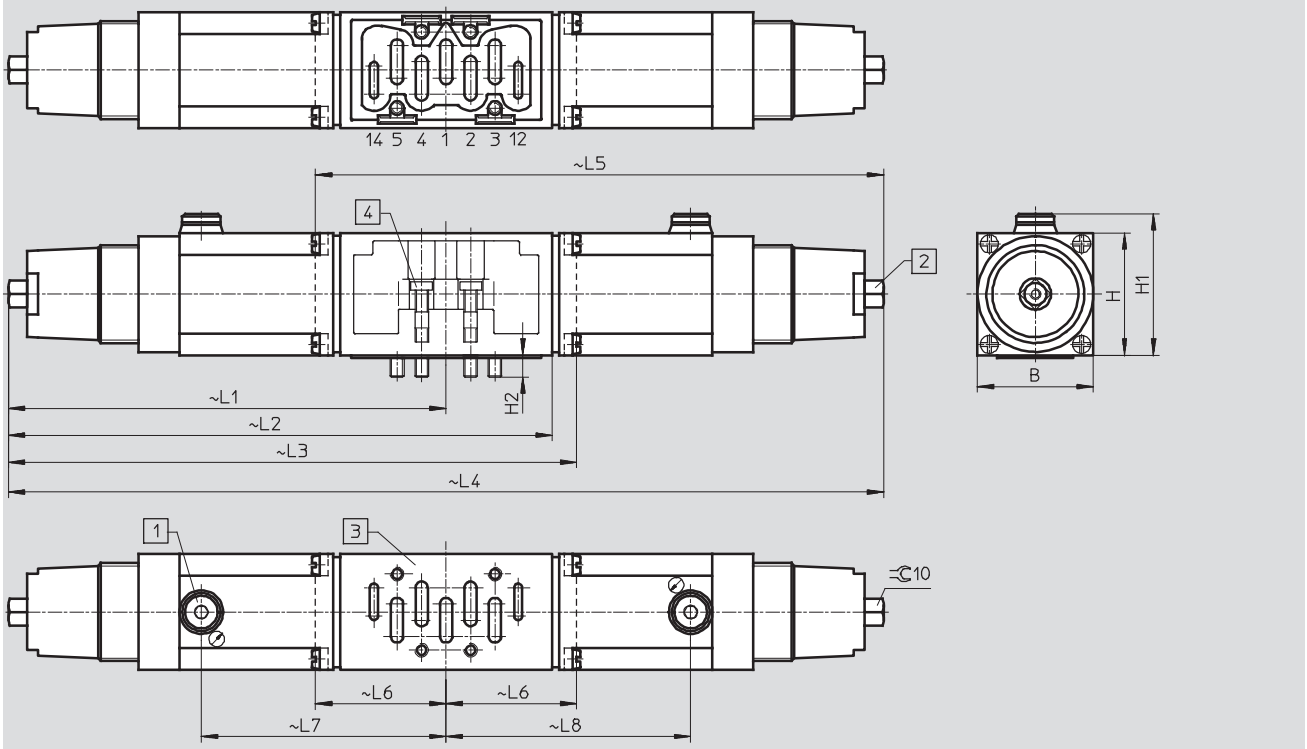

1 Pressure gauge connection G⅛ 2 Regulating screw 3 Port pattern to ISO 5599/1 4 Socket head screw, captive

Type	B	H	H1	H2	L1	L2	L3	L4	L5	L6	L7	L8
LR-ZP-A-D-1	42.6	45	52	8	161	–	209	–	–	48	90	–
LR-ZP-B-D-1	42.6	45	52	8	–	–	–	–	209	48	–	90
LR-ZP-A/B-D-1	42.6	45	52	8	161	–	–	322	–	–	90	90
LR-ZP-P-D-1	42.6	45	52	8	161	200	–	–	–	–	90	–

Type	B	H	H1	H2	L1	L2	L3	L4	L5	L6	L7	L8
LR-ZP-A-D-2	54	58	62.5	10	188	–	247	–	–	–	105.5	–
LR-ZP-B-D-2	54	58	62.5	10	–	–	–	–	247	59	–	105.5
LR-ZP-A/B-D-2	54	58	62.5	10	188	–	–	376	–	–	105.5	105.5
LR-ZP-P-D-2	54	58	62.5	10	188	233	–	–	–	–	105.5	–

Type	B	H	H1	H2	L1	L2	L3	L4	L5	L6	L7	L8
LR-ZP-A-D-3	70	63	65	14	201.5	–	274	–	–	–	119	–
LR-ZP-B-D-3	70	63	65	14	201.5	–	–	–	274	72.5	–	119
LR-ZP-A/B-D-3	70	63	65	14	201.5	–	–	403	–	–	119	119
LR-ZP-P-D-3	70	63	65	14	201.5	260	–	–	–	–	119	–

Valve terminals type 04 VIMP-/VIFB-04, ISO 5599/2

Technical data

Dimensions Download CAD data ➔ **www.festo.com**

Throttle plate

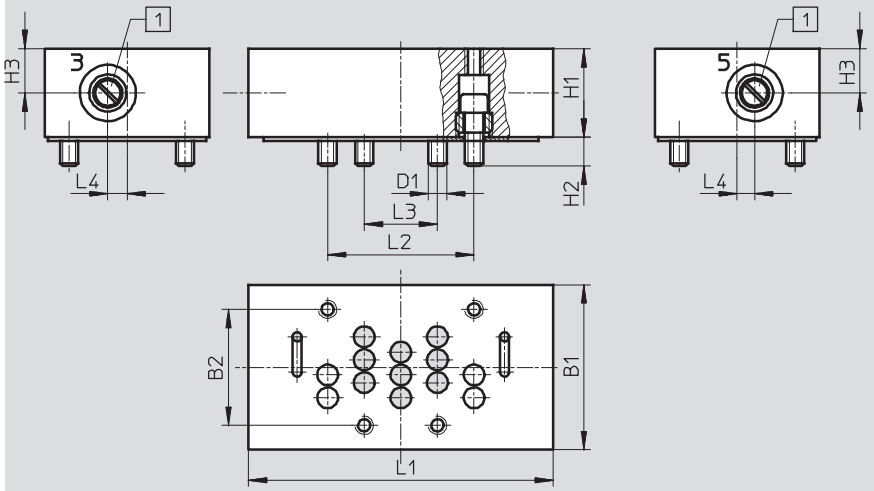

1 Adjusting screw for throttle

Type	B1	B2	D1	H1	H2	H3	L1	L2	L3	L4
GRO-ZP-1-ISO-B	42	28	M5	25	6.5	12.5	77	36	18	6
GRO-ZP-2-ISO-B	54	38	M6	29	9.5	14.5	100	48	24	6.3
GRO-ZP-3-ISO-B	70	48	M8	33	12	16.5	132	64	32	7

Valve terminals type 04 VIMP-/VIFB-04, ISO 5599/2

Individual valves

FESTO

Ordering data – Individual valves

	Code	Valve function	ISO	Type	Part No.		
					Valves	Intermediate solenoid plates	
						24 V DC	120 V AC
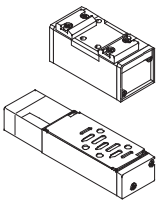	M	5/2-way valve • With intermediate solenoid plate • Mechanical spring	1	**MUH-5/2-D-1-FR-C-VI**	**151014**	**34927**	**34929**
			2	**MUH-5/2-D-2-FR-C-VI**	**151844**	**34931**	**34932**
			3	**MUH-5/2-D-3-FR-C-VI**	**151863**	**34934**	**34936**
	L	5/2-way valve • With intermediate solenoid plate • Pneumatic spring	1	**MUH-5/2-D-1-L-C-VI**	**151009**	**34927**	**34929**
			2	**MUH-5/2-D-2-L-C-VI**	**151845**	**34931**	**34932**
			3	**MUH-5/2-D-3-L-C-VI**	**151864**	**34934**	**34936**
		5/2-way valve • With intermediate solenoid plate • Pneumatic spring • External pilot air supply	1	**MUH-5/2-D-1-L-S-C-VI**	**151009**	**151713**	**–**
			2	**MUH-5/2-D-2-L-S-C-VI**	**151845**	**151714**	**–**
			3	**MUH-5/2-D-3-L-S-C-VI**	**151864**	**151715**	**–**
	J	5/2-way valve, double solenoid • With intermediate solenoid plate	1	**JMUH-5/2-D-1-C-VI**	**151007**	**34928**	**34930**
			2	**JMUH-5/2-D-2-C-VI**	**151846**	**34437**	**34933**
			3	**JMUH-5/2-D-3-C-VI**	**151865**	**34935**	**34937**
	D	5/2-way valve, double solenoid • With intermediate solenoid plate • Dominating signal	1	**JDMUH-5/2-D-1-C-VI**	**151008**	**34928**	**34930**
			2	**JDMUH-5/2-D-2-C-VI**	**151847**	**34437**	**34933**
			3	**JDMUH-5/2-D-3-C-VI**	**151866**	**34935**	**34937**
	G	5/3-way valve • With intermediate solenoid plate • Mid-position closed	1	**MUH-5/3G-D-1-C-VI**	**151010**	**34928**	**34930**
			2	**MUH-5/3G-D-2-C-VI**	**151848**	**34437**	**34933**
			3	**MUH-5/3G-D-3-C-VI**	**151867**	**34935**	**34937**
	F	5/3-way valve • With intermediate solenoid plate • Mid-position exhausted	1	**MUH-5/3E-D-1-C-VI**	**151011**	**34928**	**34930**
			2	**MUH-5/3E-D-2-C-VI**	**151849**	**34437**	**34933**
			3	**MUH-5/3E-D-3-C-VI**	**151868**	**34953**	**34937**
	B	5/3-way valve • With intermediate solenoid plate • Mid-position pressurised	1	**MUH-5/3B-D-1-C-VI**	**151012**	**34928**	**34930**
			2	**MUH-5/3B-D-2-C-VI**	**151850**	**34437**	**34933**
			3	**MUH-5/3B-D-3-C-VI**	**151869**	**34935**	**34937**

Valve terminals type 04 VIMP-/VIFB-04, ISO 5599/2

Accessories

FESTO

Ordering data – Accessories					
Designation	Code	Description	ISO	Type	Part No.
Blanking plate					
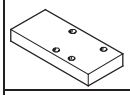	A	Blanking plate for vacant position	1	**IAP-04-D-1**	**30430**
			2	**IAP-04-D-2**	**36111**
			3	**IAP-04-D-3**	**36121**
Manifold sub-base					
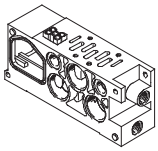	–	Manifold sub-base for multi-pin plug connection	1	**VIGK-04-D-1**	**30424**
			2	**VIGK-04-D-2**	**18886**
			3	**VIGK-04-D-3**	**18888**
		Manifold sub-base for multi-pin plug connection with increased flow rate	1	**VIGK-04-D-1-⅜**	**525569**
			2	**VIGK-04-D-2-½**	**525570**
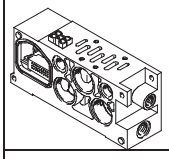	–	Manifold sub-base for fieldbus	1	**VIGI-04-D-1**	**18837**
			2	**VIGI-04-D-2**	**18839**
			3	**VIGI-04-D-3**	**18841**
		Manifold sub-base for fieldbus with increased flow rate	1	**VIGI-04-D-1-⅜**	**525572**
			2	**VIGI-04-D-2-½**	**525571**
Flow control plate					
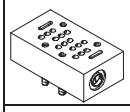	X	Flow control plate (with two one-way flow control valves for exhaust air flow control)	1	**GRO-ZP-1-ISO-B**	**119673**
			2	**GRO-ZP-2-ISO-B**	**119675**
			3	**GRO-ZP-3-ISO-B**	**119674**
Intermediate pressure regulator plate					
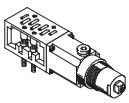	P	Port 1	1	**LR-ZP-P-D-1**	**119670**
			2	**LR-ZP-P-D-2**	**119671**
			3	**LR-ZP-P-D-3**	**119672**
	R	Port 4	1	**LR-ZP-A-D-1**	**119676**
			2	**LR-ZP-A-D-2**	**119627**
			3	**LR-ZP-A-D-3**	**119630**
	S	Port 2	1	**LR-ZP-B-D-1**	**119677**
			2	**LR-ZP-B-D-2**	**119628**
			3	**LR-ZP-B-D-3**	**119631**
	Q	Ports 2 and 4	1	**LR-ZP-A/B-D-1**	**119678**
			2	**LR-ZP-A/B-D-2**	**119629**
			3	**LR-ZP-A/B-D-3**	**119632**
Isolating disc					
	V	For creating pressure zones	1	**NSC-04-D-1**	**30431**
			2	**NSC-04-D-2**	**18909**
			3	**NSC-04-D-3**	**18910**
Pressure gauge for regulator					
	T	Max. 10 bar	–	**MA-40-10-⅛-EN**	**162835**
	U	Max. 16 bar		**MA-40-16-⅛-EN**	**162836**
Multi-pin plug socket					
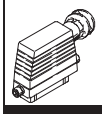	Y	For MP3, Harting plug, 40-pin	–	**IMP1-SD-40**	**18318**

Valve terminals type 04 VIMP-/VIFB-04, ISO 5599/2

Accessories

Ordering data – Accessories				
Designation			Type	Part No.
User documentation				
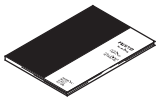	Valve terminal VIMP-/VIFB-04	German	**P.BE-VIISO-04B-DE**	**163940**
		English	**P.BE-VIISO-04B-EN**	**163941**