Condensate drain WA/PWEA

Datasheet

Function

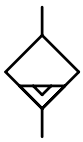

Temperature range
0 ... +60°C

Operating pressure
1.5 ... 16 bar

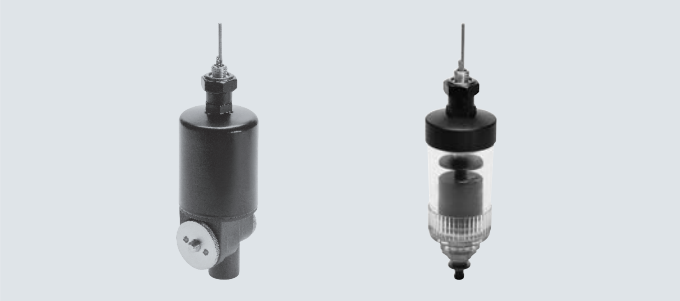

Note

For the automatic condensate drain WA-2 to close, it requires a flow rate of 125 l/min, which occurs at approx. 1.5 bar.

For attaching to service unit components and compressed air networks/systems.
Condensed water in the compressed air is separated in appropriate filters. The condensate that accumulates must be emptied from time to time, as otherwise it would be drawn in and could lead to faults in downstream components. The devices shown ensure the condensate is automatically drained off.

They contain a float which opens a poppet valve when a certain condensate level is reached. This drains the condensate that has been collected. If a manual override is additionally installed, the condensate can also be drained manually.

- Automatic emptying after the max. fill level has been reached
- Automatic emptying after the operating pressure p < 0.5 bar is switched off
- Manual actuation during operation is possible

General technical data		
Type	WA-1-B	WA-2
Pneumatic connection	M9	M9
Condensate drain connection	G1/4	PK-4
Design	External, mechanically operated, fully automatic condensate drain valve	
Measured variable	Filling level	
Type of mounting	In-line installation	
Mounting position	Vertical, ±10°	Vertical, ±5°
Valve function	2/2-way valve, closed, monostable	2/2-way valve, open, monostable
Manual override	Non-detenting	

Operating and environmental conditions			
Type		WA-1-B	WA-2
Operating pressure	[bar]	4 ... 16	1.5 ... 14
Operating medium		Water	
Ambient temperature	[°C]	0 ... +60	0 ... +50
Temperature of medium	[°C]	0 ... +60	0 ... +50
Storage temperature	[°C]	–20 ... +60	–20 ... +60
Corrosion resistance class CRC[1)]		2	

1) Corrosion resistance class CRC 2 to Festo standard FN 940070
Moderate corrosion stress. Indoor applications in which condensation can occur. External visible parts with primarily decorative surface requirements which are in direct contact with a normal industrial environment.

Datasheet

Materials

Sectional view

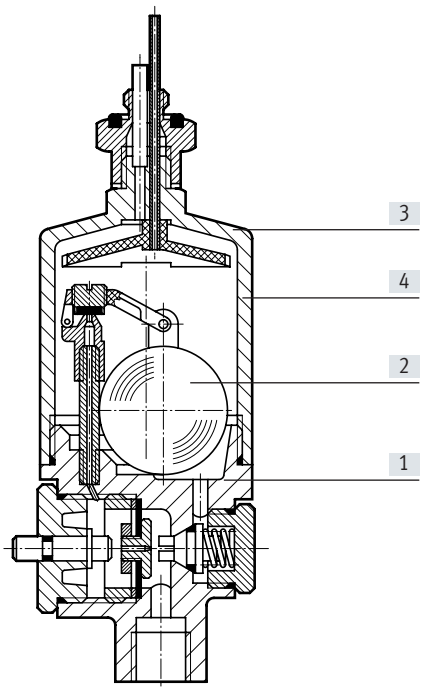

Condensate drain		WA-1-B	WA-2
[1]	Housing	Brass	Brass
[2]	Float	Polypropylene	Polyacetal
[3]	Hood	Polyamide	Wrought aluminium alloy
[4]	Bowl	–	Polycarbonate
–	Seals	Nitrile rubber	Nitrile rubber
Note on materials		–	Contains paint-wetting impairment substances

Actuating force F for manual actuation as a function of input pressure p

WA-1-B

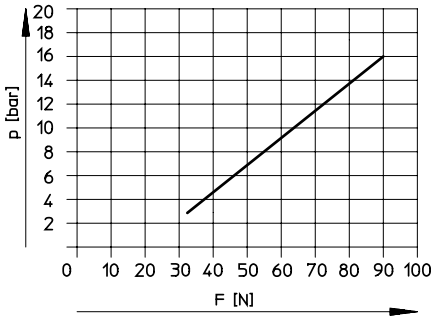

Primary pressure p1 = 7 bar

WA-2

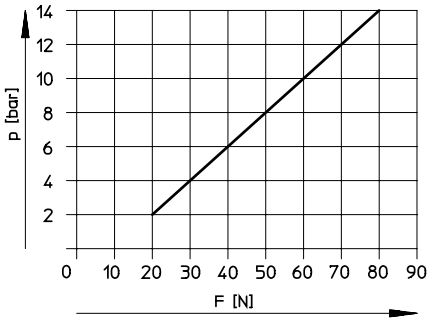

Primary pressure p1 = 7 bar

Max. possible condensate flow rate qn as a function of input pressure p

WA-2

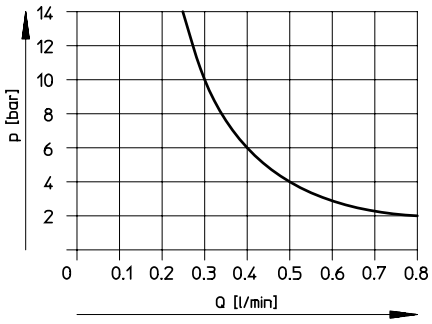

Primary pressure p1 = 7 bar

Datasheet

Dimensions Download CAD data ➔ www.festo.com

WA-1-B

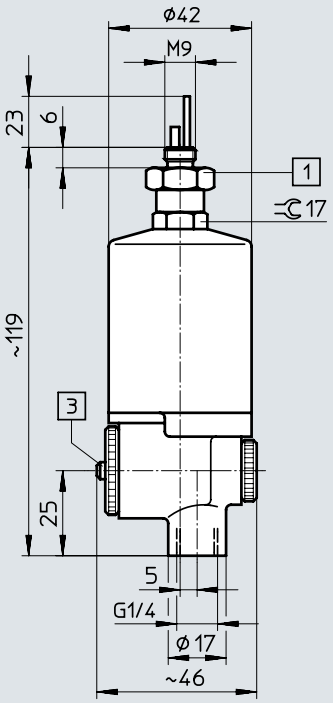

WA-2

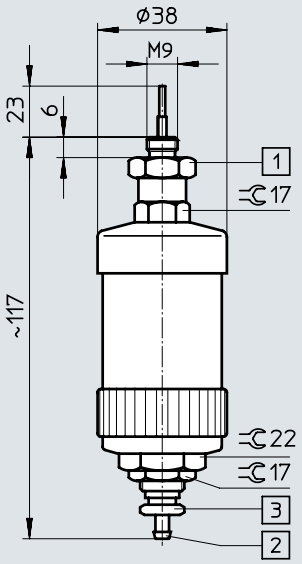

[1] Adapter SW17

[2] Barbed connector for plastic tubing PCN-4

[3] Manual override

Ordering data

	Pneumatic connection	Valve function	Weight [g]	Part no.	Type
	M9	2/2-way valve, closed, monostable	210	**158497**	**WA-1-B**
	M9	2/2-way valve, open, monostable	92	**152810**	**WA-2**

Datasheet

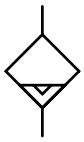

Temperature range
+1 ... +60°C

Operating pressure
0.8 ... 16.0 bar

www.festo.com

Condensate passes through the connecting bore in the bottom of the filter bowl into the attached condensate drain valve, where it is collected in a reservoir. A capacitive sensor detects when the maximum filling level is reached.

The condensate escapes into the atmosphere via the opening diaphragm valve through the discharge pipe. The diaphragm valve closes again after a specified response time. A residual amount of condensate remains in the reservoir so that no compressed air can escape into the discharge line.

- Fully automatic condensate drain with independent electric controller
- Interface available for communicating with master control device
- Reliable thanks to non-contacting capacitive sensor
- Can be used with service units or simply in piping systems
- Operated via touch-sensitive keys or electrical interface
- Ready status and switching status indicated via LEDs and electrical interface

General technical data			
Type	PWEA-AC-6A	PWEA-AC-7A	PWEA-AC-3D
Pneumatic connection	G1/2		
Condensate drain connection	PK-8		
Design	External, electrically operated, fully automatic condensate drain valve		
Measured variable	Filling level		
Type of mounting	In-line installation		
Mounting position	Vertical ±5°		
Valve function	3/2-way single solenoid valve, closed		
Manual override	Non-detenting		

Electrical data				
Type		PWEA-AC-6A	PWEA-AC-7A	PWEA-AC-3D
Electrical connection		Screw terminal PG9		
Nominal operating voltage	[V AC]	115	230	–
	[V DC]	–	–	24
Mains frequency	[Hz]	50/60		–
Nominal power of condensate drain	[VA]	2	2	–
	[W]	–	–	2
Control elements		Touch-sensitive keypad with test button		
Ready status indication/switching status indication		LED		
Alarm output		Contacting		
Protection class (IEC 60529)		IP65		
Protection class		II	II	III

Datasheet

Operating and environmental conditions				
Type		PWEA-AC-6A	PWEA-AC-7A	PWEA-AC-3D
Operating pressure	[bar]	0.8 ... 16		
Operating medium		Compressed air to ISO 8573-1:2010 [–:–:–]		
PWIS conformity		VDMA24364-B1/B2-L		
Ambient temperature	[°C]	+1 ... +60		
Temperature of medium	[°C]	+1 ... +60		
Storage temperature	[°C]	+10 ... +60		
Corrosion resistance class CRC[1]		2		
CE marking (see declaration of conformity)[2]		To EU EMC Directive		
		To EU Low Voltage Directive		–
UKCA marking (see declaration of conformity)[2]		UK regs EMC		
		UK regs RoHS		
		UK regs electrical equipment		
Certification		C-Tick		
KC mark		KC EMC		

1) Corrosion resistance class CRC 2 to Festo standard FN 940070
Moderate corrosion stress. Indoor applications in which condensation can occur. External visible parts with primarily decorative surface requirements which are in direct contact with a normal industrial environment.

2) For information about the area of use, see the EC declaration of conformity at: www.festo.com/catalogue/wa ➔ Support/Downloads.
If the devices are subject to usage restrictions in residential, commercial or light-industrial environments, further measures for the reduction of the emitted interference may be necessary.

Materials	
Housing	Plastic
Condensate reservoir	Wrought aluminium alloy
Seals	NBR, FPM, PU
Note on materials	RoHS-compliant
	Free of copper and PTFE

Dimensions

Download CAD data ➔ www.festo.com

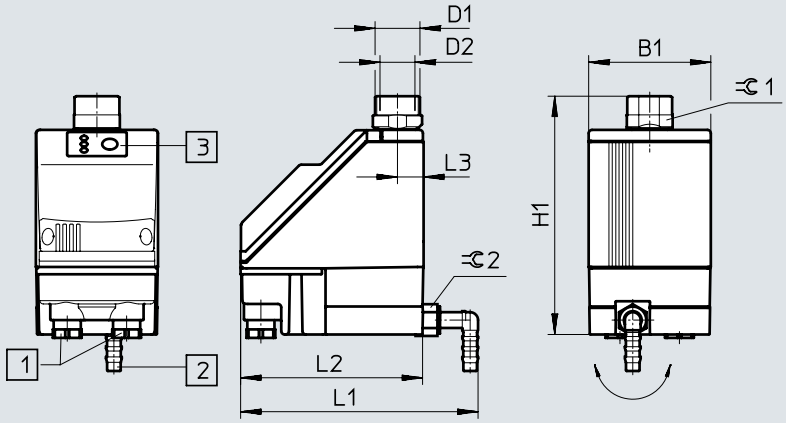

[1] Screw terminal PG9
[2] Connection can be rotated 360° for plastic tubing PUN-H-12x2
[3] Touch-sensitive keypad with LED display

B1	D1	D2	H1	L1	L2	L3	1	2
72	G3/4	G1/2	140	140	108	15	27	16

Ordering data

	Electrical connection	Nominal operating voltage [V AC]	Nominal operating voltage [V DC]	Weight [g]	Part no.	Type
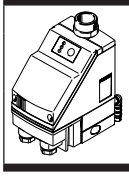	Screw terminal PG9	115	–	700	**538679**	**PWEA-AC-6A**
		230	–	700	**538680**	**PWEA-AC-7A**
		–	24	700	**538681**	**PWEA-AC-3D**

Festo - Your Partner in Automation

1 Festo Inc.

5300 Explorer Drive
Mississauga, ON L4W 5G4
Canada

Festo Customer Interaction Center
Tel: 1 877 463 3786
Fax: 1 877 393 3786
Email: customer.service.ca@festo.com

2 Festo Pneumatic

Av. Ceylán 3,
Col. Tequesquináhuac
54020 Tlalnepantla,
Estado de México

Multinational Contact Center
01 800 337 8669

ventas.mexico@festo.com

3 Festo Corporation

1377 Motor Parkway
Suite 310
Islandia, NY 11749

4 Regional Service Center

7777 Columbia Road
Mason, OH 45040

Festo Customer Interaction Center
1 800 993 3786
1 800 963 3786
customer.service.us@festo.com

Connect with us

www.festo.com/socialmedia

www.festo.com

Subject to change