Proportional flow control valves VPCF

Key features

At a glance

The proportional flow control valve VPCF meets the highest requirements for dynamic response, repetition accuracy and characteristic curve linearity. Extremely short cycle times mean that unit quantities can be increased and therefore costs can be cut substantially.

Thanks to its compact size, to its compact size, easy-to-access pneumatic connections and simple actuation, the valve can be positioned flexibly and assembled virtually anywhere – even in existing applications.

Advantages:
- Long service life even in harsh environments
- High dynamic response for variable cycle times
- High repetition accuracy
- Degree of protection: IP65
- ATEX certification

Applications:
- Spray jet control in painting systems
- Laser beam enclosure
- Regulating the air flow of heaters in hot air applications

The technology in detail

[1] Service interface (sealed)
[2] "Power/Error" LED
[3] "Status" LED
[4] Port: Working air (2)
[5] Electrical connection
[6] Earth terminal
[7] Port: Compressed air (1) and exhaust air (3)
[8] Through-hole for mounting

Mode of operation:
The valve regulates the flow for a connected pneumatic consumer, regardless of its flow resistance or fluctuations in the compressed air supply. The required sensors and the closed-loop control system are integrated in the valve.

The setpoint value for the flow can be specified using an analogue interface. The current actual value is also fed back in analogue format.

Mounting options

Via through-holes

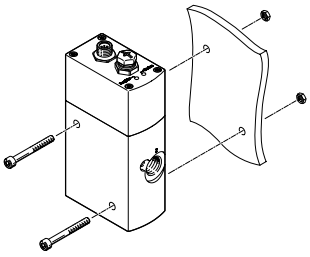

Via threads

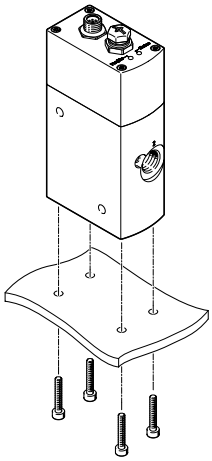

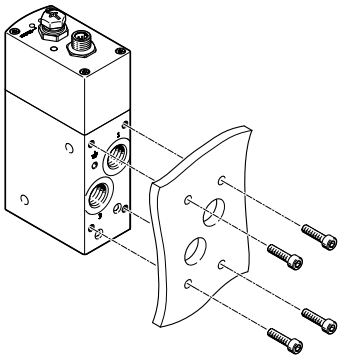

Type codes

001	Series	
VPCF	Proportional flow control valve	

002	Nominal width [mm]	
6	6	

003	Directional control valve type	
L	In-line valve	

004	Valve function	
8	3/3-way valve	

005	Pneumatic connection	
G38	G3/8	

006	Pressure range [bar]	
6	0 ... 6	
10	0 ... 10	

007	Setpoint input for individual valves	
V1	0 ... 10 V	
A4	4 ... 20 mA	

008	Display type	
E	LED	

009	EU certification	
EX2	II 3GD	

Peripherals overview

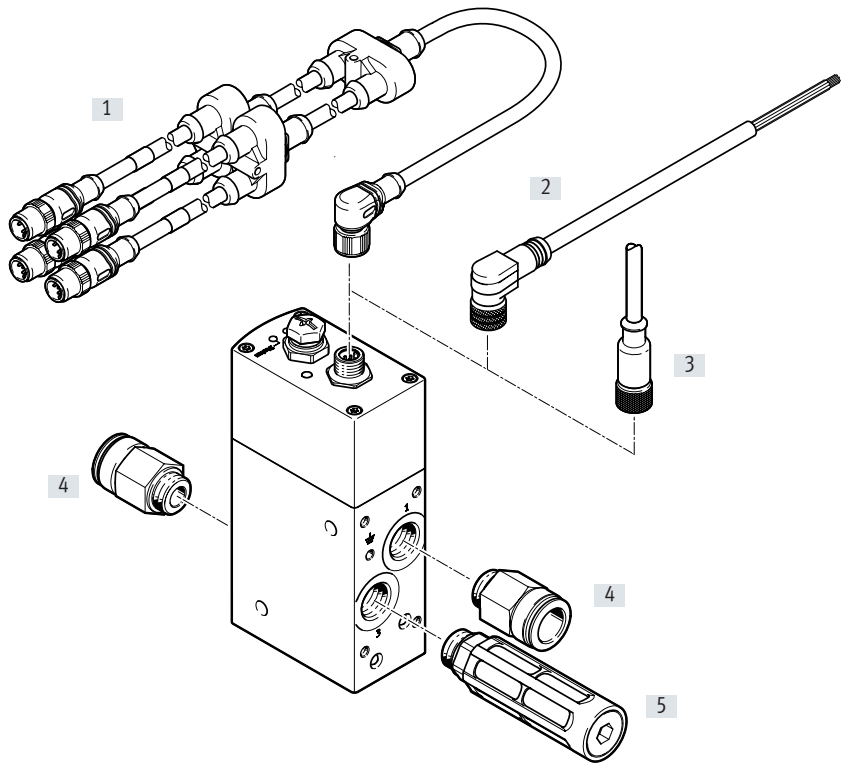

Accessories		Description	→ Page/Internet
[1]	Adapters NEFV	Connecting cable for analogue/digital input/output modules from Beckhoff, e.g. EtherCAT Box output module EP41xx and EtherCAT Box input module EP31xx	10
[2]	Connecting cable NEBU	For control purposes	9
[3]	Connecting cable SIM	For control purposes	9
[4]	Push-in fitting QS	For connecting tubing with standard O.D.	9
[5]	Silencers U	For reducing noise at exhaust ports	9

Data sheet

Function

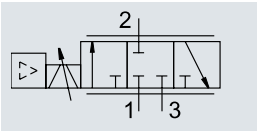

Voltage
24 V DC

Flow rate
20 ... 1000 l/min

Pressure
1 ... 6 bar

General technical data			
Type		VPCF-...-G3/8-6	VPCF-...-G3/8-10
Pneumatic connection		G3/8	
Nominal width	[mm]	6	
Flow rate range	[l/min]	0 ... 1000	0 ... 1500
Flow rate control range[1)]	[l/min]	20 ... 1000	30 ... 1500
Valve function		3-way proportional flow control valve	
Design		Piston spool with integrated sensor	
Sealing principle		Hard	
Actuation type		Electrical	
Reset method		Magnetic spring	
Type of control		Direct	
Flow direction		Non-reversible	
Type of mounting		Direct mounting via through-hole	
		Direct mounting via thread	
Short circuit current rating		Yes	
Diagnostic function		Via LED	
Mounting position		Any	
Product weight	[g]	856	
Electrical connection		8-pin	
		M12x1	
		Plug	
		A-coded	
Pressure sensors			
Repetition accuracy FS	[%]	< ±0.5	
Absolute accuracy FS	[%]	< 3	
Hysteresis FS	[%]	< 0.8	

Note

1)
For VPCF-...-6:
Control takes place as of 20 l/min. The valve switches to the exhaust position below this setpoint value.
The accuracy specifications provided are based on a flow rate control range of 50 ... 1000 l/min.

For VPCF-...-10:
Control takes place as of 30 l/min. The valve switches to the exhaust position below this setpoint value.
The accuracy specifications provided are based on a flow rate control range of 75 ... 1500 l/min.

Data sheet

Electrical data		
Operating voltage range	[V DC]	20.4 ... 30
Nominal operating voltage	[V DC]	24
Residual ripple	[%]	5
Max. current consumption	[A]	1.2
Current consumption[1]	[mA]	150
Max. power consumption	[W]	36
Switching output		PNP
Switching input		PNP
Current carrying capacity per output	[mA]	100
Duty cycle	[%]	100
Signal range of the analogue output / input	[mA]	4 ... 20
	[V]	0 ... 10
Reverse polarity protection		For operating voltage

1) With load-free outputs

Operating and environmental conditions			
Type		VPCF-...-G3/8-6	VPCF-...-G3/8-10
Operating medium		Compressed air to ISO 8573-1:2010 [6:4:4]	
Note on the operating/pilot medium		Lubricated operation not possible, max. particle size 5 µm	
Operating pressure	[mPa]	0.1 ... 0.6	0.1 ... 1
	[bar]	1 ... 6	1 ... 10
Ambient temperature	[°C]	0 ... 50	
Temperature of medium	[°C]	15 ... 35	
Degree of protection[1]		IP65	
Corrosion resistance class CRC[2]		1	
CE marking (see declaration of conformity)[4]		To EU EMC Directive[3]	
		To EU Explosion Protection Directive (ATEX)	
Vibration resistance		Severity level 2 as per FN 942017-4 (based on DIN EN 60068-2-6)	
Shock resistance		Severity level 2 as per FN 942017-5 (based on DIN EN 60068-2-27)	
Certification		RCM compliance mark	

1) In assembled state with plug, connecting cable, cover cap and pneumatic connections
2) Corrosion resistance class CRC 1 to Festo standard FN 940070
Low corrosion stress. Dry indoor application or transport and storage protection. Also applies to parts behind covers, in the non-visible interior area, and parts which are covered in the application (e.g. drive trunnions).
3) For information about the area of use, see the EC declaration of conformity at: www.festo.com/catalogue/VPCF → Support/Downloads.
If the devices are subject to usage restrictions in residential, commercial or light-industrial environments, further measures for the reduction of the emitted interference may be necessary.
4) Additional information is available at www.festo.com/sp → Certificates.

ATEX		
ATEX category gas		II 3G
Type of ignition protection for gas		Ex nA IIC T5 X Gc
ATEX category for dust		II 3D
Type of ignition protection for dust		Ex tc IIIC T60°C X Dc
Explosion-proof ambient temperature	[°C]	0°C ≤ Ta ≤ +50°C
CE marking (see declaration of conformity)[1]		To EU Explosion Protection Directive (ATEX)

1) Additional information: www.festo.com/sp → Certificates.

Data sheet

Materials	
Proportional flow control valve	
Seals	FPM, HNBR
Housing	Anodised wrought aluminium alloy
Note on materials	RoHS-compliant

Max. possible flow qn as a function of input pressure p1

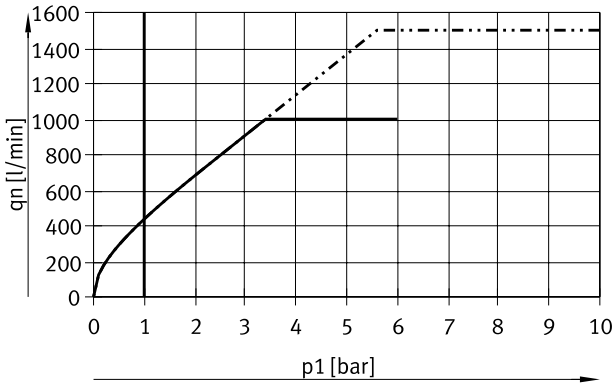

VPCF-...-6
VPCF-...-10

Flow rate qn as a function of setpoint value s

Overall characteristic curve

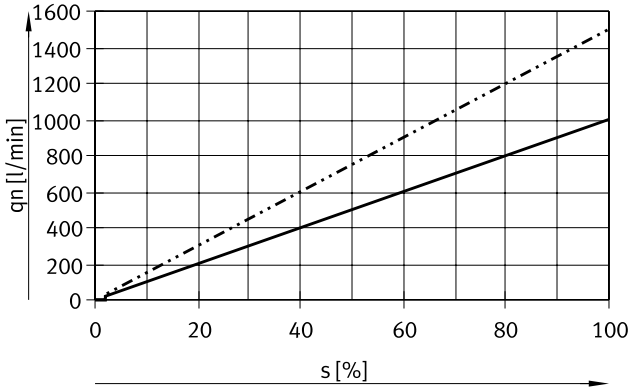

Detail of setpoint value s 0 ... 5%

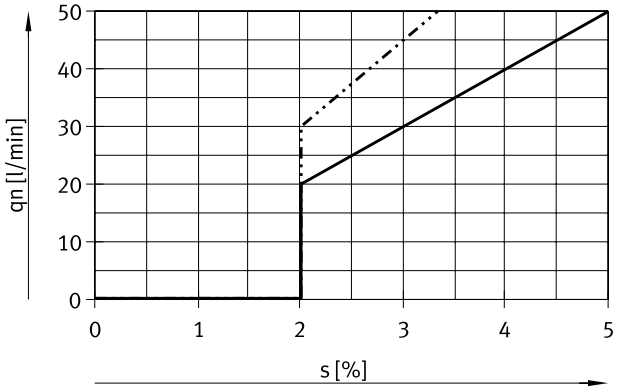

VPCF-...-6
VPCF-...-10

Pin allocation

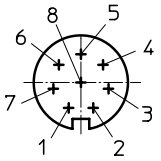

Pin	Signal	Function
1	Digital In	Release
2	24 V	
3	Analogue In–	Flow rate setpoint value –
4	Analogue In+	Flow rate setpoint value +
5	Digital Out 2	Status optimal operating range
6	Analogue Out	Flow rate actual value (PIN 6 and 7)
7	0 V	
8	Digital Out 1	Error status
PE	Shielding	

Data sheet

Dimensions Download CAD data ➔ www.festo.com

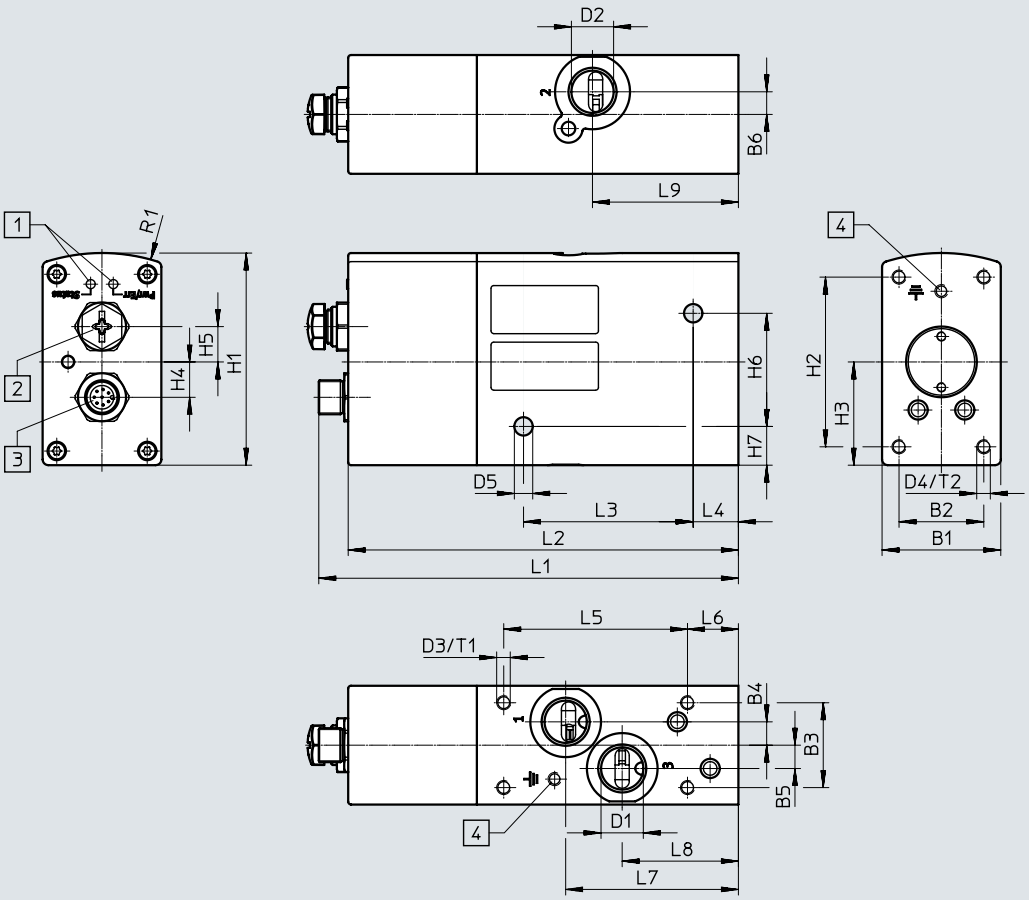

[1] LED display
[2] Service interface
Plug, M12x1, 5-pin
[3] Electrical connection
Plug, M12x1, 8-pin
[4] Earth terminal

Type	B1	B2	B3	B4	B5	B6	D1	D2	D3	D4
VPCF-...	42	30	30	8.3	8.3	8	G3/8	G3/8	M5	M5

Type	D5	H1	H2	H3	H4	H5	H6	H7	L1	L2
	⌀									
VPCF-...	6.5	75	60	36.5	12.5	12.5	40	13.7	148.4	138

Type	L3	L4	L5	L6	L7	L8	L9	R1	T1	T2
VPCF-...	60	16	65	18	61.1	41.1	51.6	65	10	10

Ordering data and accessories

Ordering data

	Operating pressure	Setpoint input	Part no.	Type
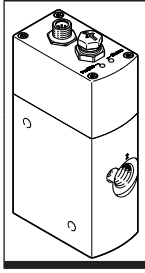	1 ... 6	4 ... 20 mA	**8041713**	**VPCF-6-L-8-G38-6-A4-E-EX2**
		0 ... 10 V	**8041714**	**VPCF-6-L-8-G38-6-V1-E-EX2**
	1 ... 10	4 ... 20 mA	**8041715**	**VPCF-6-L-8-G38-10-A4-E-EX2**
		0 ... 10 V	**8041716**	**VPCF-6-L-8-G38-10-V1-E-EX2**

Ordering data – Accessories

	Description	Cable length [m]	Part no.	Type
Safety clip NEAU[1)]				
	• Protects "equipment that is not intrinsically safe" against simple disconnection • ATEX category: Gas: II 3G / Dust: II 3D	–	**548068**	**NEAU-M12-GD**
Push-in fitting QS				
	For connecting tubing with standard O.D.	–	**186347**	**QS-G3/8-16**
Silencer U				
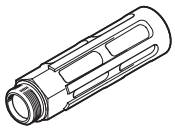	For reducing noise at exhaust ports	–	**6843**	**U-3/8-B**
Connecting cable NEBU, angled[1)]				
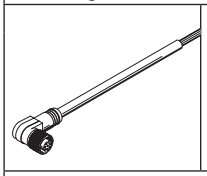	For control purposes	2	**542256**	**NEBU-M12W8-K-2-N-LE8**
		5	**542257**	**NEBU-M12W8-K-5-N-LE8**
Connecting cable SIM, straight[1)]				
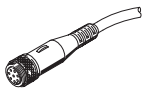	For control purposes	2	**525616**	**SIM-M12-8GD-2-PU**
		5	**525618**	**SIM-M12-8GD-5-PU**

1) Suitable for ATEX

Note

Because of the design, the setpoint value 0 V/4 mA results in a low internal air consumption. This can be avoided by inserting a valve upstream in the supply cable.

Valve with ATEX certification:
Part no. 535902
Type: MFH-3-1/2-S-EX
Flow rate: 3700 l/min
ATEX category: II 2G/II 2D

Coil with ATEX certification
Part no. 535619
Type: MSFG-24DC-M-EX
ATEX category: II 2G/II 2D

Accessories

Adapter NEFV

Connecting cable for analogue/digital input/output modules from Beckhoff.

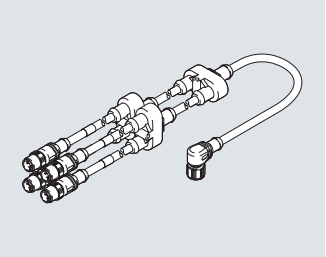

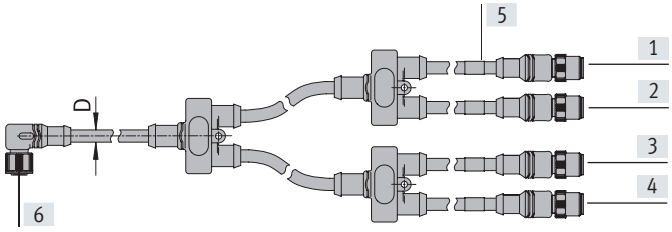

Pin allocation

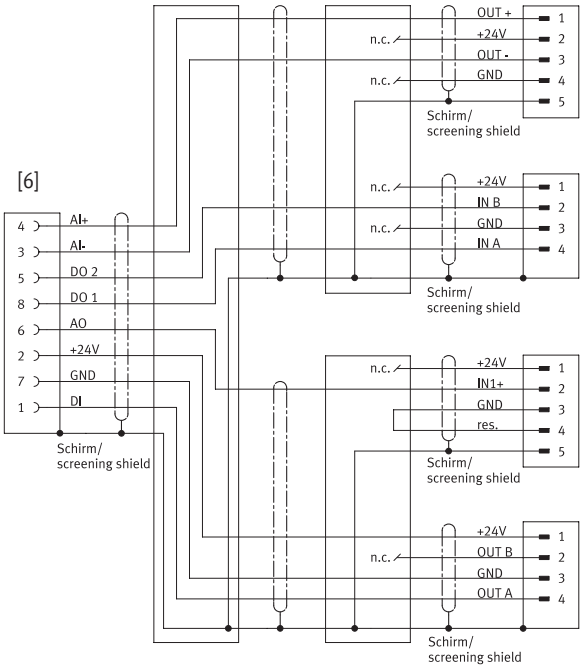

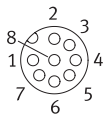

Socket M12x1 [6]

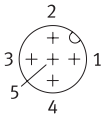

Plug M12x1 [1] / [3]

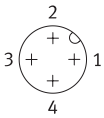

Plug M12x1 [2] / [4]

1) Colours of rings [5]
GN = Green
WH = White
YE = Yellow
RD = Red

Ordering data

Degree of protection	Ambient temperature [°C]	Cable length [m]	Part no.	Type[1)]
IP65, IP67	−5 ... +80	0.6	**4787544**	**NEFV-V12-M12W8-0.6-M12QG5**

1) Suitable for ATEX

Festo - Your Partner in Automation

1 Festo Inc.

5300 Explorer Drive
Mississauga, ON L4W 5G4
Canada

Festo Customer Interaction Center
Tel: 1 877 463 3786
Fax: 1 877 393 3786
Email: customer.service.ca@festo.com

2 Festo Pneumatic

Av. Ceylán 3,
Col. Tequesquináhuac
54020 Tlalnepantla,
Estado de México

Multinational Contact Center
01 800 337 8669

ventas.mexico@festo.com

3 Festo Corporation

1377 Motor Parkway
Suite 310
Islandia, NY 11749

4 Regional Service Center

7777 Columbia Road
Mason, OH 45040

Festo Customer Interaction Center
1 800 993 3786
1 800 963 3786
customer.service.us@festo.com

Connect with us

www.festo.com/socialmedia

www.festo.com

Subject to change