Installation system CPI

FESTO

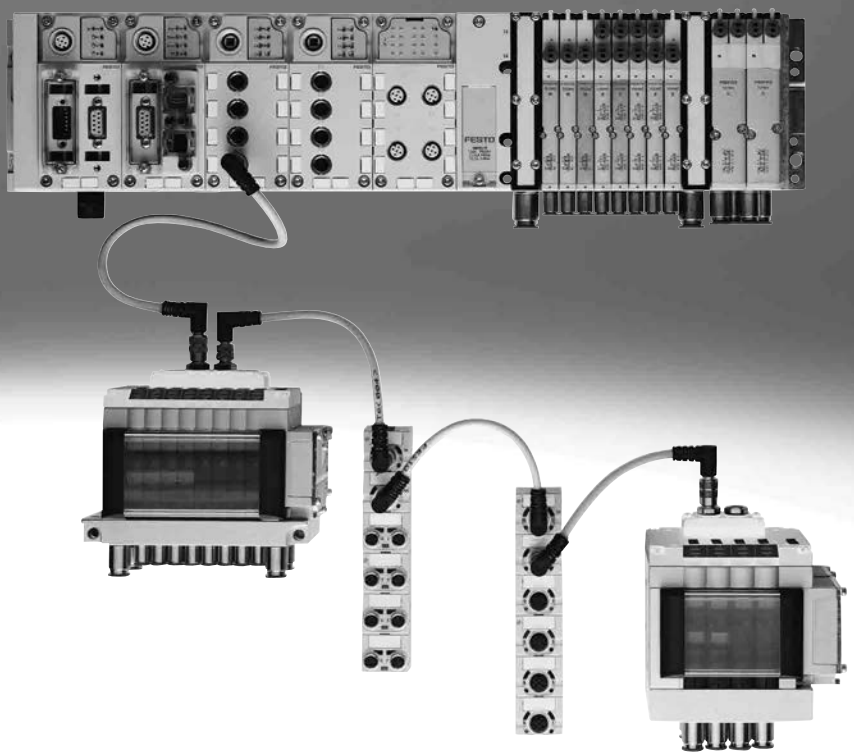

Key features

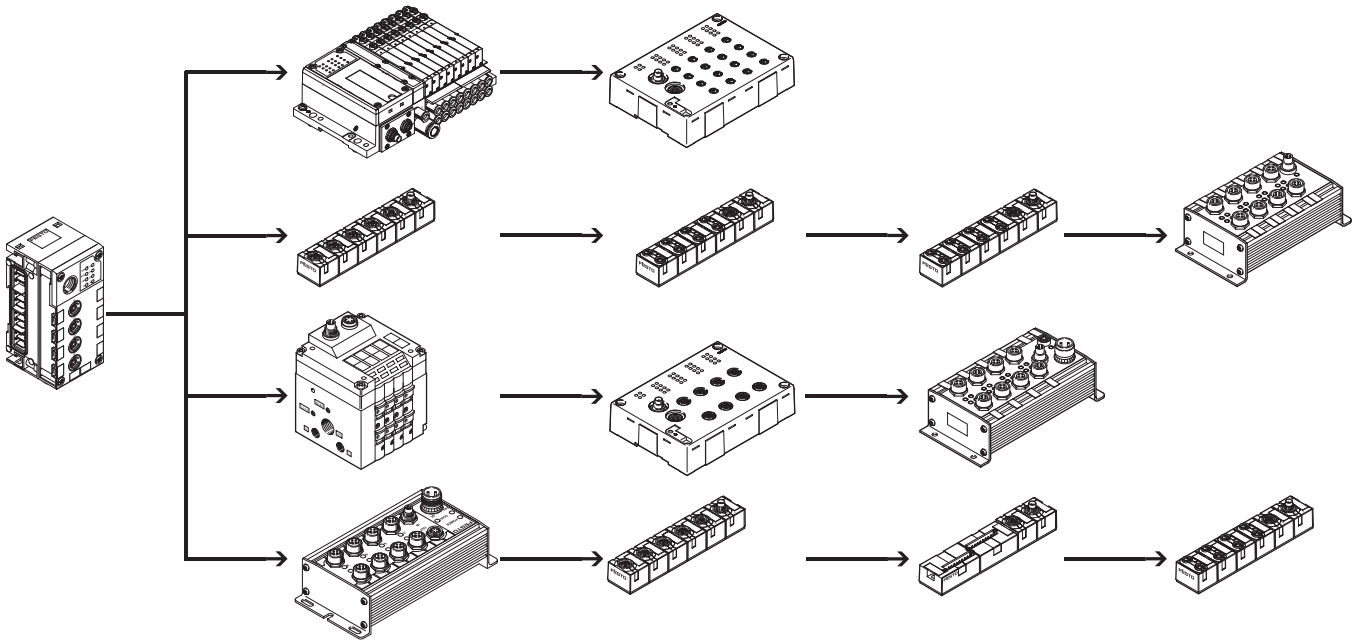

Key features

Innovative	Sturdy	Versatile	Operational safety
• Complete concept for decentralised machine and system structure; centralised and decentralised installation is possible in combination with the CPX terminal • Decentralised pneumatic components and sensors for fast processes • Centralised electric components for fieldbus and common power supply • Flexible configuration of the individual CP strings • Choice of valve terminal sizes for optimum pneumatic control loop systems • Performance data as for the CP system with the addition of the comprehensive diagnostic capabilities of the CPX terminal	• Electrical accessories to IP65 • Proven valve terminals CPV (compact), MPA-S (sturdy, modular) • Electrical input and output modules in metal housing or compact in encapsulated plastic housing • Sturdy connection technology M12, alternatively M8 • IP20 modules for control cabinet installation with a choice of spring-loaded terminals or screw terminals	• A number of CP interfaces can be combined under one bus node • Four CP strings up to 10 m in length (radius) facilitate optimum decentralisation • Max. 32 inputs and 32 outputs/valves per string • Available valves: – Valve terminal CPV-SC, max. 170 l/min flow rate – Valve terminal MPA-S, max. 700 l/min flow rate – Valve terminal CPV, max. 1600 l/min flow rate – Valve terminals with I-Port interface (VTUG, CPV, MPA-L, VTUB-12, VTOC) • Input modules with 8 ... 32 inputs and output modules with 4 ... 8 outputs, each with or without additional power supply	• Sturdy modules and accessories • Ready-to-install system including CP cable (hybrid cable for data and power) • Short circuit-proof connections with reverse polarity protection • Valves with separate load voltage supply • All modules equipped with local diagnostics and status LEDs • Diagnostics of each CP string via controller/fieldbus • Self-learning system (save button) for current configuration • Easy replacement of modules at any time

Key features

Installation system CPI

The CPI system is capable of meeting the completely contrasting requirements created by the difference between extensive decentralised modularisation and electrical installation.

High-speed machines require short cycle times and short pneumatic tubing. The valves must be mounted close to the cylinders. The CPI system was developed to meet these requirements without having to wire each valve individually.

The system integrates the modular valve terminal MPA-S with internal communication system, valve terminals with integrated sub-base CPV that are suitable for operating small pneumatic drives, and various input/output modules in a single installation concept.

All CP valve terminals and CP modules are connected using a ready-to-install CP cable, and are attached to the CP interface. 4 modules, for example one CPV valve terminal and one to three CP input modules, make up an installation string that ends at the CP interface.

Scope of services:

- Max. 4 installation strings per CP interface
- Max. 10 metre line length per string (radius)
- Max. 4 CP modules per string
- Max. 32 inputs and max. 32 outputs per string

The number of CP modules that can be connected and the number of inputs/outputs is dependent on the type of CP module and CP interface.

The maximum configuration (4 modules per string, 32 inputs/outputs) is only possible in combination with the CPX terminal and CP modules with CPI functionality.
The CP interface is the central connection point for the valve power supply and the sensor supply. The power supply for the sensors connected to the input modules is separate from the load voltage supply of the valves.

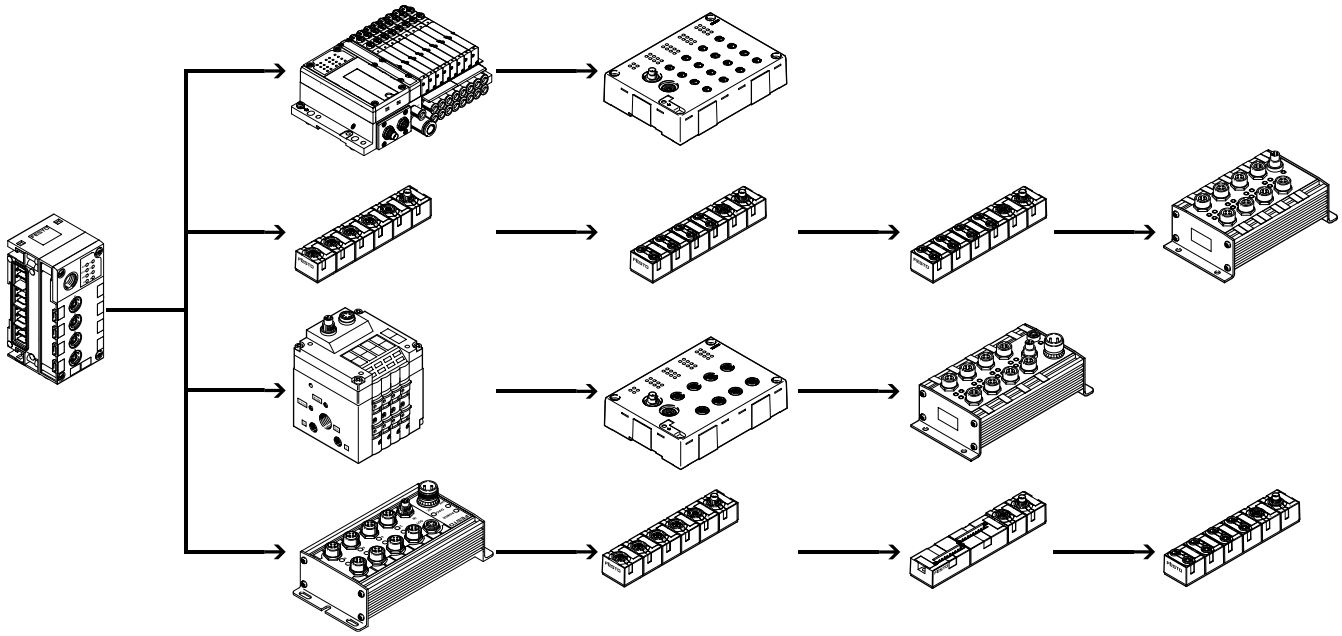

Key features

Node types

Fieldbus

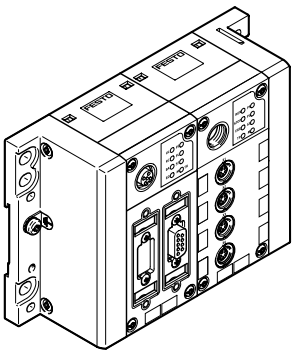

CPX with CP interface
CPX-...

Valve terminal

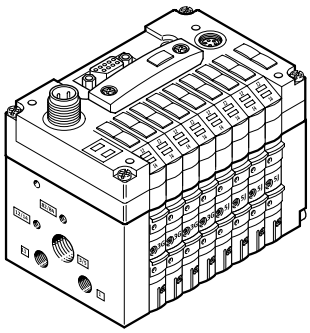

with CP string extension
CPV, CPV-SC, MPA-S

Valve terminal configurator online at: ➔ www.festo.com

The appropriate CPI system can be chosen quickly and easily using the online catalogue. This includes a convenient valve terminal configurator, making it much easier to order the right product.

Components from the CPI system series, type CTEC, are ordered using the order code.

Ordering system for type 55E
➔ Internet: ctec

Peripherals overview

Integration of the installation system CPI in various connection concepts

Centralised pneumatic connection (valve terminal)

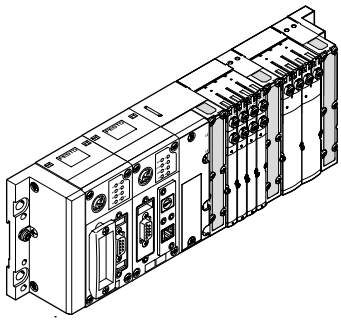

Advantages
- Pneumatic multiple connector plate
- Less tubing required than with individual valves
- Common valve air supply
- Central positioning
- Material, weight and cost savings

Disadvantages
- Only effective with a large number of closely spaced actuators
- Heavier than an individual valve (lower overall weight than the same number of individual valves), which may make mounting on moving systems or in very cramped installation spaces difficult
- Longer tube lengths are occasionally required, ruling out the possibility of optimum pneumatic performance

Decentralised pneumatic connection (individual valve/valve on individual sub-base)

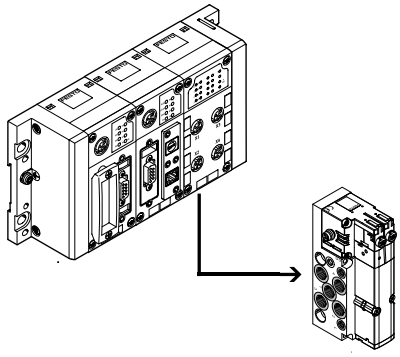

Advantages
- Can be positioned directly at the actuator, can even be integrated
- Short tubing length to the actuator enables short switching times
- Optimum pneumatic timing and performance possible

Disadvantages
- Air supply per valve requires more tubing
- Serial electrical links not advisable/possible
- More complex electrical installation

Centralised electrical connection (multi-pin/fieldbus connection/standalone mini control system)

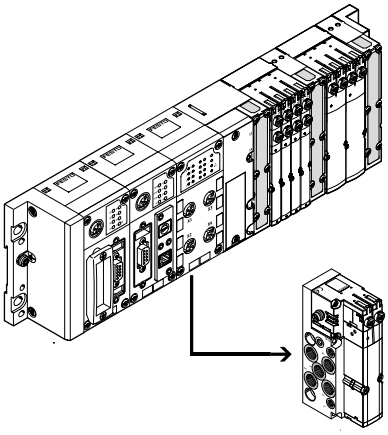

Advantages
- Internal electrical links requires less cabling
- Increased transparency
- Material, weight and cost savings
- Ideal for connecting a large number of closely spaced valves

Disadvantages
- Not suitable for individual, more widely separated applications due to the more complex cabling
- More complex individual components (cables, fieldbus modules)

Peripherals overview

Integration of the installation system CPI in various connection concepts

Decentralised electrical connection (CPI system/individual valve/valve on individual sub-base/valve manifold assembly)

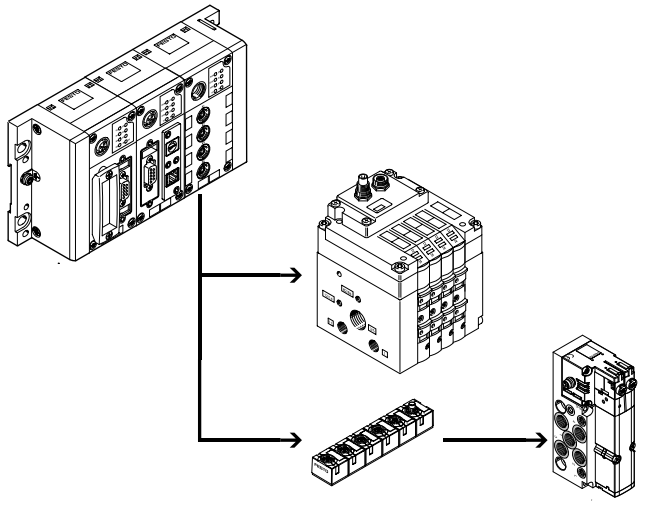

Advantages
- CPI system with reduced installation effort for groups of actuators/ sensors
- Different levels of complexity with widely separated individual components
- Easy replacement of components during servicing
- Optimum pneumatic timing and performance possible

Disadvantages
- Limited spatial expansion possible (CPI system up to 10 m, AS-Interface up to 100 m)
- High installation costs

Combined centralised and decentralised electrical connection (valve terminal with CP interface/output module)

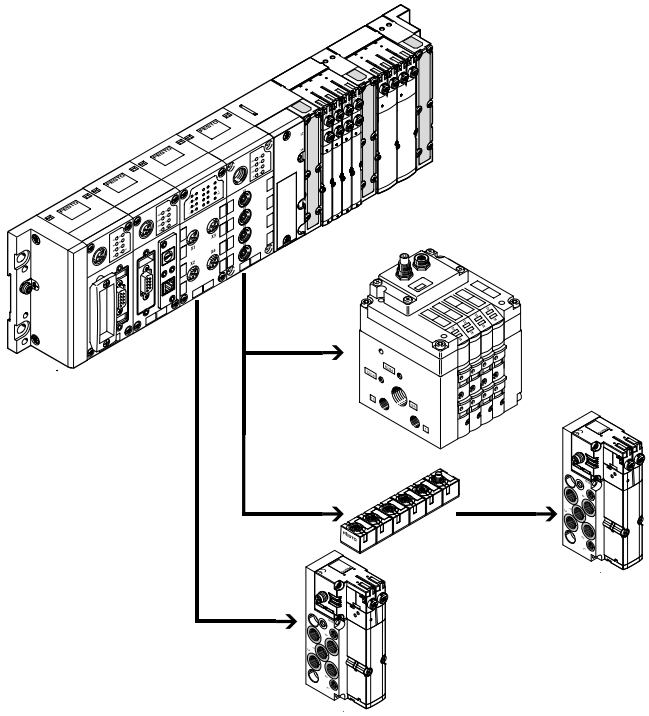

Advantages
- Scalable to different requirements within a system
- One control interface in the system, reduces installation complexity with closely and widely spaced actuators
- Enables an optimum electrical and pneumatic control chain

Disadvantages
- Application must at least partially meet the requirements of a centralised connection

Connecting the installation system CPI to a higher-level controller

Bus node/Industrial Ethernet

Different bus nodes are used for integration in the control systems of various manufacturers.
The CPI system can therefore be operated via more than 90% of the most commonly used bus systems.

- PROFIBUS
- INTERBUS
- DeviceNet
- CANopen
- CC-LINK
- EtherNet/IP
- PROFINET
- POWERLINK
- EtherCAT
- Sercos III

Control block

The optional Front End Controller CPX-CEC permits simultaneous access via Ethernet and an integrated web server, as well as autonomous pre-processing.

- Ethernet
- TCP/IP
- Web

Peripherals overview

Connecting the installation system CPI to a higher-level controller

Overview

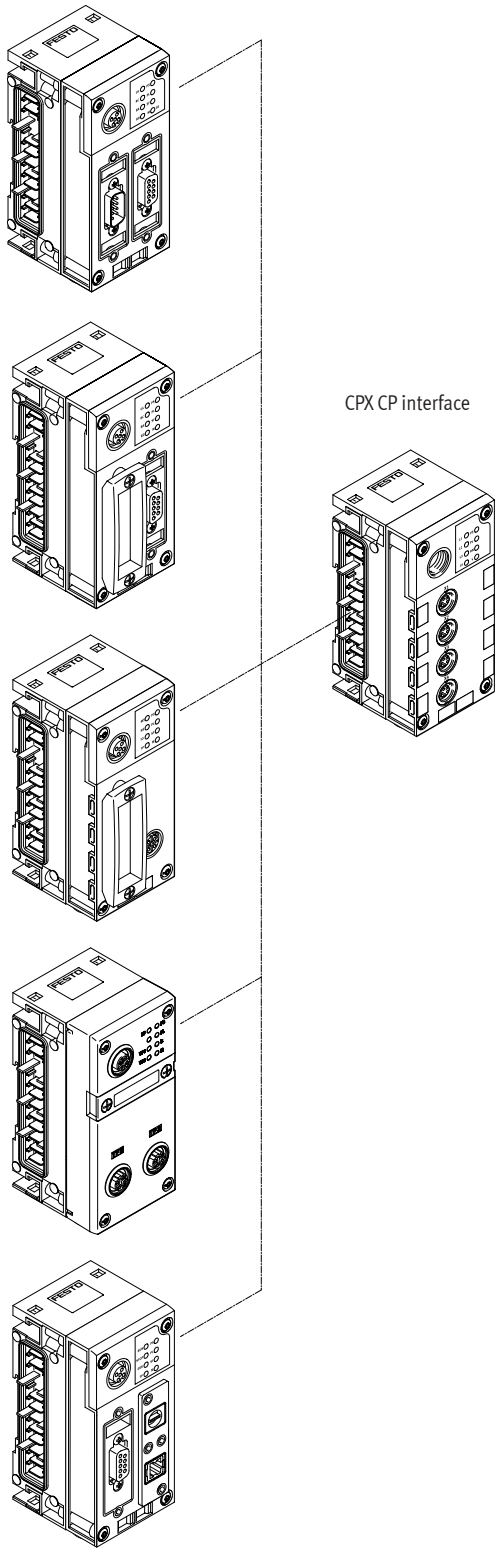

The precise technical data and specifications for CPX can be found online at:

➔ Internet: cpx

Bus protocol/bus node	Special features
INTERBUS	
FB6 FB21	• Up to 96 digital inputs/outputs • 6 analogue inputs/outputs
DeviceNet	
FB11	• Up to 512 digital inputs/outputs • 18 analogue inputs/outputs
PROFIBUS DP	
FB13	• Up to 512 digital inputs/outputs • 18 analogue inputs/outputs
CANopen	
FB14	• Up to 64 digital inputs and 64 digital outputs • 8 analogue inputs and 8 analogue outputs
CC-LINK	
FB23-24	• Up to 512 digital inputs/outputs • 32 analogue inputs/outputs
EtherNet/IP	
FB36	• Up to 128 digital inputs/outputs • 8 analogue inputs/outputs
PROFINET	
FB33 FB34 FB35 FB43 FB44 FB45	• Up to 512 digital inputs/outputs • 32 analogue inputs/outputs
EtherCAT	
FB37	• Up to 512 digital inputs/outputs • 32 analogue inputs/outputs
POWERLINK	
FB40	• Up to 512 digital inputs/outputs • 32 analogue inputs/outputs
Sercos III	
FB39	• Up to 512 digital inputs/outputs • 32 analogue inputs/outputs

Peripherals overview

Connecting modules in the installation system CPI

CP interface within the context of the CPX terminal

Using the CP interface as a module of the CPX terminal makes it easier to progress from the CP system to the CPI system.
All CP modules are both downwards and upwards compatible and can therefore be used in the CP system and in the CPI system.

This extension has doubled the scalability and range of CP modules that can be used:

- 4 CP strings
- Up to 4 modules per string
- Up to 32 inputs and outputs per CP string

An added advantage of the CPI system is its extremely user-friendly access options via the CPX bus node and the CPX-CEC:

- Data preprocessing
- Diagnostics via software
- Reading out of status information
- Display via permanently installed or mobile unit
- Remote maintenance with CPX-CEC and Ethernet connection

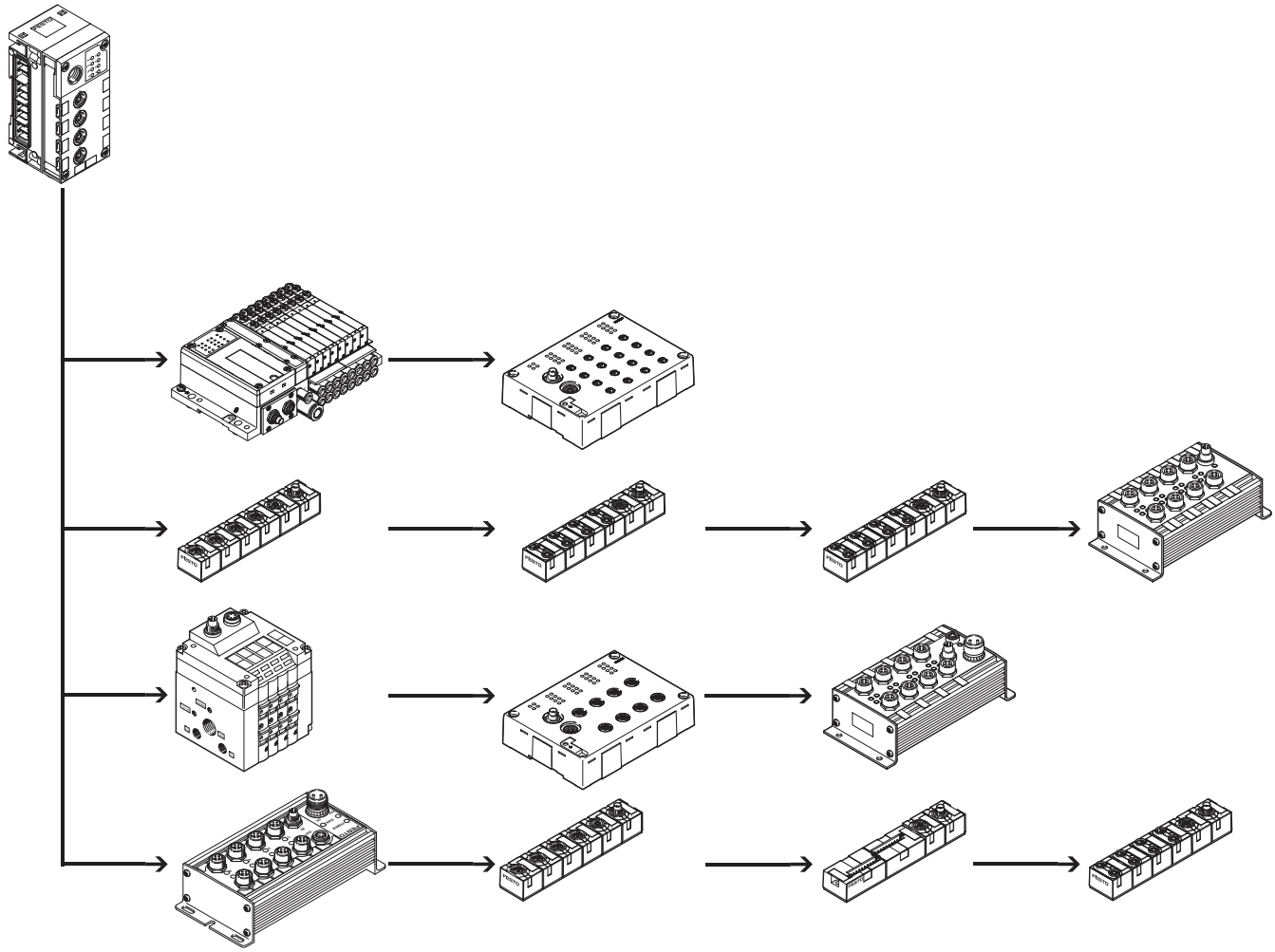

Connection options

Fieldbus Direct

Special feature	Application	Characteristics of Fieldbus Direct	
The Fieldbus Direct product range is the most compact way of connecting valves to a fieldbus. The bus node is directly integrated in the electrical actuation of the valve terminal and therefore takes up only a minimal amount of space.	Fieldbus Direct is a system for the compact connection of a valve terminal to different bus standards. The CP string extension option enables the functions and components of the CPI installation system to be used.	• Extremely compact and space-saving design • Low-cost solution for connecting a small number of valves to the fieldbus • Direct front-end integration with a high degree of protection IP65 • Comprehensive diagnostics and condition monitoring	**Note** Detailed description of the range of functions and combination options of CPV valves ➔ Internet: cpv (valve terminal CPV)

Fieldbus Direct and CP string extension

The optional string extension allows a further valve terminal and I/O modules to be connected to the Fieldbus Direct bus node: • A CP string of the CP system is integrated in the bus node as an extension. • Various input and output modules as well as valve terminals can be connected.	The maximum length of the CP string extension is 10 metres, which means that the extension modules can be mounted directly on site. All of the required electrical signals including load current supply are transmitted via the CP cable, which in turn means that no further installation is needed on the extension module.	The CP string interface offers: • Max. 32 input signals • Max. 32 output signals for output modules 24 V DC or solenoid coils • Logic and sensor supply for the input modules	• Load voltage supply for the valve terminal • Logic supply for the output module

Connection options

Fieldbus Direct with CP string extension

CPV valve terminal

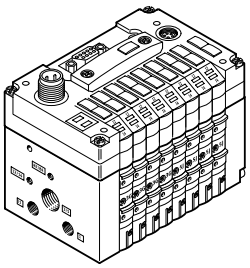

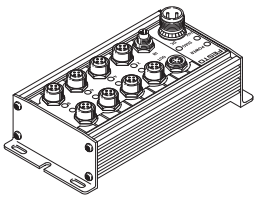

- 4 to 8 valve positions
- DeviceNet
- 4 to 16 solenoid coils

More information
→ Internet: cpv

Compact vision system SBOC-Q/SBOI-Q with CP interface

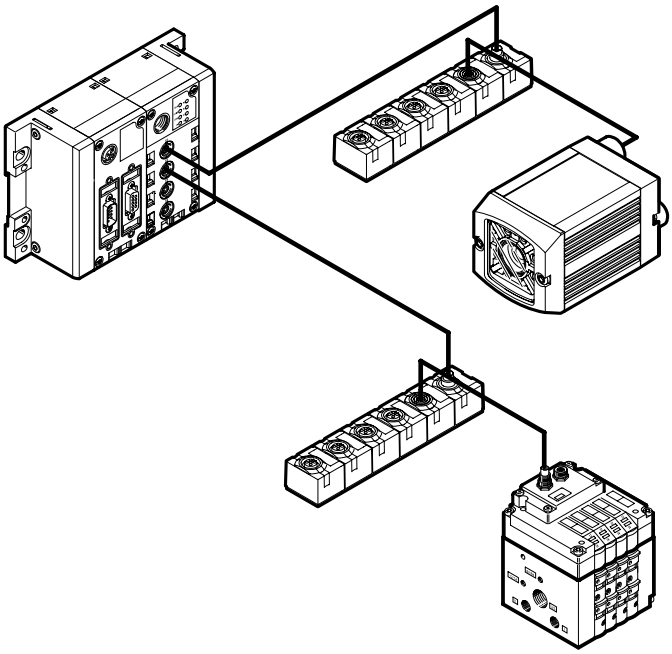

The compact vision system SBOx-Q can be integrated into a Festo CPI network. In this case it functions like a binary module with 16 inputs and 16 outputs.

- Address requirement: 16 digital inputs/outputs
- CPI connection

More information
→ Internet: sboc-q, sboi-q

Connection options

Connecting inputs and outputs in the installation system CPI

CP connecting cable

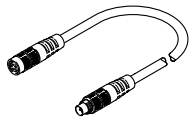

KVI-CP-3-...

Note

The total length of all CP cables in a CP string must not exceed 10 m.

- Pre-assembled cables for connecting the CP modules
- Lengths from 0.25 to 8 metres
- M9 plug/socket, 5-pin
- Straight/angled version in any combination

More information
→ Internet: kvi-cp

CP input/output modules in sturdy, universal and compact design or as valve terminal

Input and output modules with different electrical interfaces are available for connecting sensors and actuators:

- M12-5POL
- M8-3POL
- M8-4POL
- Spring-loaded terminal or screw terminal technology

The maximum number of inputs/outputs that can be connected to the individual modules can vary depending on the application. The following module sizes are available:

- Input modules with 8, 16 or 32 channels
- Output modules with 4 or 8 channels
- CPV with 4, 6 or 8 valve slices (max. 16 valves)
- MPA-S with 2 ... 32 valves

Valve terminals with CP interface

CPV valve terminal

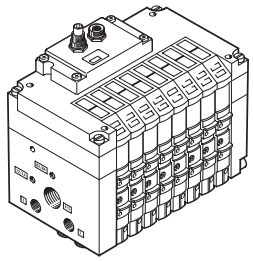

CPV10
CPV14
CPV18

- Max. 16 valves in 8 valve slices
- Highly compact and space-saving
- Width 10, 14, 18 mm
- Nominal flow rate 400/800/1600 l/min
- CPV10 and CPV14 with CPI functionality
- CPV18 with CP functionality

More information
→ Internet: cpv
(valve terminal CPV)

Valve terminal MPA-S

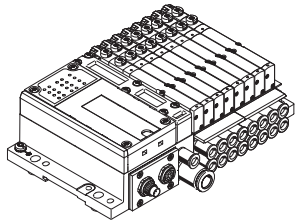

MPA1
MPA14
MPA2

- Max. 32 valves (32 solenoid coils, 16 valve positions)
- Modular and versatile
- Width 10, 14, 20 mm
- Nominal flow rate 360/550/700 l/min
- CPI functionality

More information
→ Internet: mpa-s
(valve terminal MPA-S)

Valve terminal MPA-S

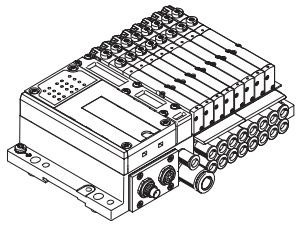

CPV-SC

- Max. 16 valves
- Extremely compact
- Width 10 mm
- Nominal flow rate 170 l/min
- CPI functionality

More information
→ Internet: cpv-sc
(valve terminal CPV-SC)

Valve terminal with I-Port interface

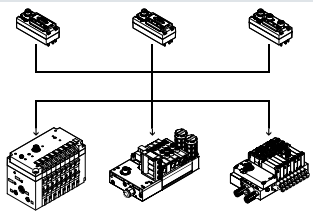

Valve terminals:
- VTOC
- VTUB-12
- CPV
- MPA-L
- VTUG

Flow rate
- 10 l/min
- 400 l/min
- 400/800 l/min
- 360/670/700 l/min
- 130 ... 1200 l/min

More information
→ Internet: vtoc
→ Internet: vtub-12
→ Internet: cpv
→ Internet: mpal
→ Internet: vtug
→ Internet: cteu

Key features – Input/output modules

Connecting inputs and outputs in the installation system CPI

Special features of the CP I/O modules in sturdy design

The sturdy CP I/O modules have a highly resistant aluminium housing and their internal electronic components can be repaired or replaced.

CP-E...Z or output modules have a separate load voltage supply, which means less load on the CP interface and CP cable and
more power for the connected consuming devices.

This also makes it easier to disconnect the consuming devices separately.

High degree of protection IP65, surpassed only by the compact CP modules with IP65/67 protection. The only exception is the IP20 protection offered by the module with clamped terminal connection for installation in control cabinets.

CP input modules in sturdy design

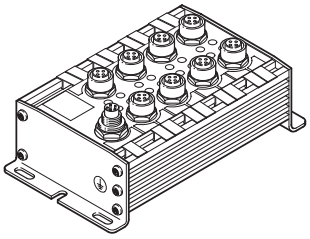

CP-E16-M12x2-5POL

- 16 inputs 24 V DC
- Signal status indication via 16 LEDs
- Operating status indication
- CP functionality

- M12 plug, double allocation
- 1x M9 CP connection
- PNP/NPN, IP65

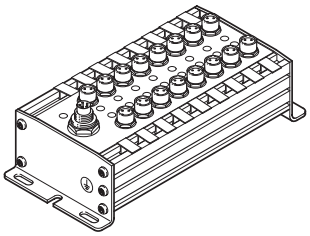

CP-E16-M8

- 16 inputs 24 V DC
- Signal status indication via 16 LEDs
- Operating status indication
- CP functionality

- M8 plug, single allocation
- 1x M9 CP connection
- PNP/NPN, IP65

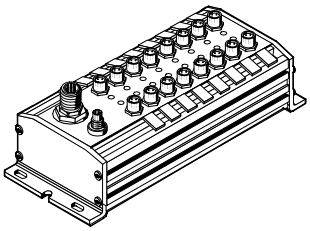

CP-E16-M8-Z

- 16 inputs 24 V DC
- Signal status indication via 16 LEDs
- Operating status indication
- CP functionality

- Galvanic isolation through additional power supply
- M8 plug, single allocation
- 1x M9 CP connection
- Separate sensor supply
- PNP/NPN, IP65

CP output modules in a sturdy design

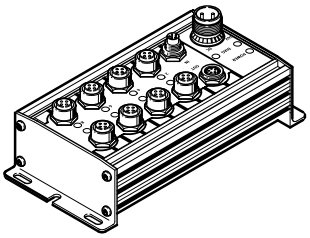

CP-A08-M12-5POL

- 8 outputs 24 V DC
- Output signal display via 8 LEDs
- Operating status indication
- M12 plug, single allocation
- CP functionality

- 2x M9 CP connection
- Separate load voltage
- Outputs resistant to overloads and short circuits
- PNP, IP65

Key features – Input/output modules

Connecting inputs and outputs in the installation system CPI

Special features of the CP I/O modules in economical design

In addition to the sturdy CP I/O modules and the compact CP I/O modules, there are also the economical modules with the design features of the compact modules, but with a greater number of inputs/outputs.

The economical CP modules feature a compact design, coupled with a large number of inputs/outputs.
The modules can be used in combination with the following valve terminals:
- CPV, MPA-S, CPV-SC

Application:
- Same function, configuration and commissioning as sturdy or compact CP modules
- Integrated H-rail mounting and earthing plate
- Centrally placed status and diagnostic LEDs
- The economical CP modules and the other CP modules can be operated together on a string
- The maximum number of modules per CP string is as follows:
  - CPI system: max. 4 modules or max. 32 inputs and 32 outputs
  - CP system: one valve terminal/output module and one input module

CP input modules in economical design

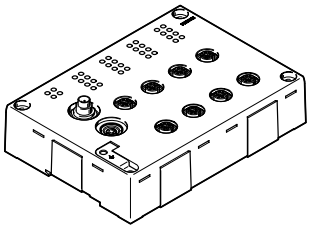

CP-E16-M12-EL

- 16 inputs 24 V DC
- Signal status indication via 16 LEDs
- Operating status indication (per module and per group of 4 inputs)
- CPI functionality

- 8x M12 plug, 5-pin, double allocation
- 2x M9 CP connection
- PNP, IP65

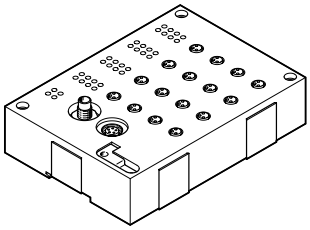

CP-E16-M8-EL

- 16 inputs 24 V DC
- Signal status indication via 16 LEDs
- Operating status indication (per module and per group of 4 inputs)
- CPI functionality

- 16x M8 plug, 3-pin, single allocation
- 2x M9 CP connection
- PNP, IP65

CP output modules in economical design

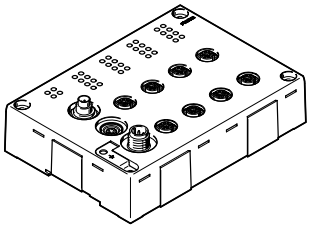

CP-A08-M12-EL-Z

- 8 outputs 24 V DC
- Signal status indication via 4 LEDs
- Operating status indication (per module and per channel/output)
- CPI functionality

- 8x M12 plug, 5-pin, double allocation
- 2x M9 CP connection
- Outputs resistant to overloads and short circuits
- PNP, IP65

Key features – Input/output modules

Connecting inputs and outputs in the installation system CPI

Special features of the CP I/O modules in compact design

In addition to the sturdy and economical CP input/output modules, there is also the compact series of CP I/O modules. These have an optimised, space-saving design, are made from plastic and are very light. They are, of course, available with the high degree of protection IP65/67 (exception: clamping modules to IP20 for installation in protected installation spaces).

The compact CP modules are designed for use in handling and assembly wherever space requirements and product weight play a role.
The modules can be used in combination with the following valve terminals:
- CPV, MPA-S, CPV-SC

Application:
- The modules can be positioned even closer to the actuators thanks to the smaller dimensions.
- Same function, configuration and commissioning as sturdy or economical CP modules
- The compact CP modules and the other CP modules can be operated together on a string
- The maximum number of modules per CP string is as follows:
  - CPI system: max. 4 modules or max. 32 inputs and 32 outputs
  - CP system: one valve terminal/ output module and one input module

CP input modules in compact design

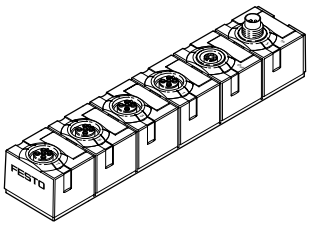

CP-E08-M12x2-CL

- 8 inputs 24 V DC
- Signal status indication via 8 LEDs
- Operating status indication
- CPI functionality

- 4x M12 plug, 5-pin, double allocation
- 2x M9 CP connection
- PNP, IP65/67

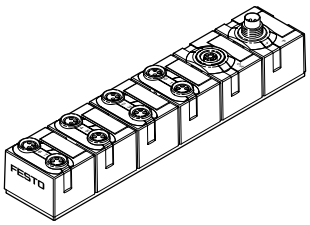

CP-E08-M8-CL

- 8 inputs 24 V DC
- Signal status indication via 8 LEDs
- Operating status indication
- CPI functionality

- 8x M8 plug, 3-pin, single allocation
- 2x M9 CP connection
- PNP, IP65/67

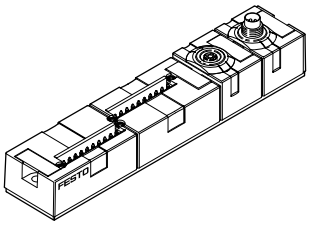

CP-E16-KL-CL

- 16 inputs 24 V DC
- Indirect signal status indication via LEDs in the connection set of the tension-spring socket
- Operating status indication
- CPI functionality

- Screw terminal or tension-spring sockets
- 2x M9 CP connection
- PNP, IP20

CP output modules in compact design

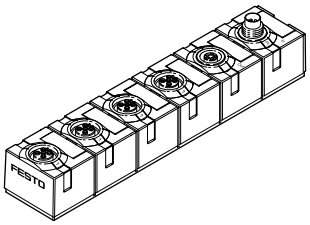

CP-A04-M12x2-CL

- 4 outputs 24 V DC
- Signal status indication via 4 LEDs
- Operating status indication
- CPI functionality

- 4x M12 plug, 5-pin, double allocation
- 2x M9 CP connection
- Outputs resistant to overloads and short circuits
- PNP, IP65/67

Key features – Mounting options

H-rail mounting

CP interface

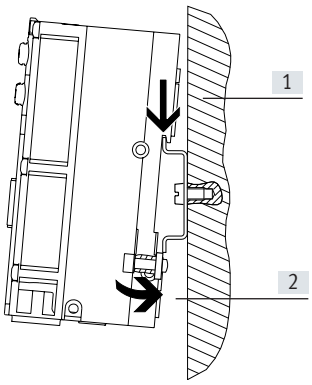

The H-rail mounting is part of the rear profile of the CPX interlinking blocks. The CPX terminal can be attached to the H-rail using the H-rail mounting kit.

The CPX terminal is first hooked onto the H-rail (see arrow 1), then swivelled onto the H-rail and secured in place with the clamping element (see arrow 2).

The following mounting kit is required for H-rail mounting (plus mounting kit for optionally mounted valves):

- CPX-CPA-BG-NRH

This enables mounting on H-rails to EN 60715.

Economical CP modules

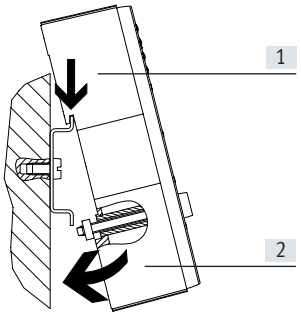

The H-rail mounting is impressed in the reverse profile of the economical CP modules. The modules can be attached to the H-rail using the H-rail mounting.

The module is first hooked onto the H-rail (see arrow 1), then swivelled onto the H-rail and secured in place with the clamping element (see arrow 2).

The scope of delivery includes the following mounting kit for H-rail mounting:

- CP-EL-HS

This enables mounting on H-rails to EN 60715.

Compact and sturdy CP modules

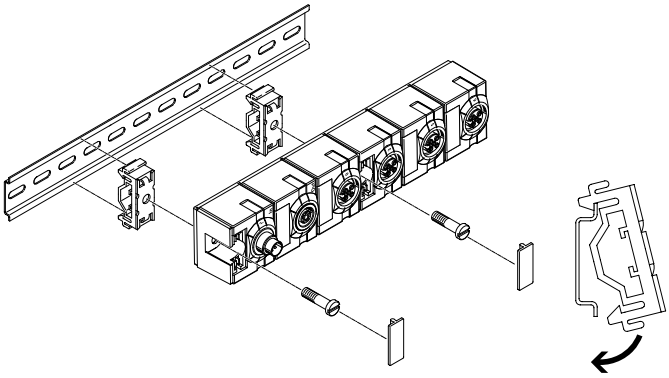

For the CP modules there is a mounting kit that can be used on an H-rail. On the compact CP modules, the mounting holes are covered by inscription labels.

The following mounting kit is needed for H-rail mounting:

- CP-TS-HS35

This enables mounting on H-rails to EN 60715.

Key features – Mounting options

Wall mounting

CP modules

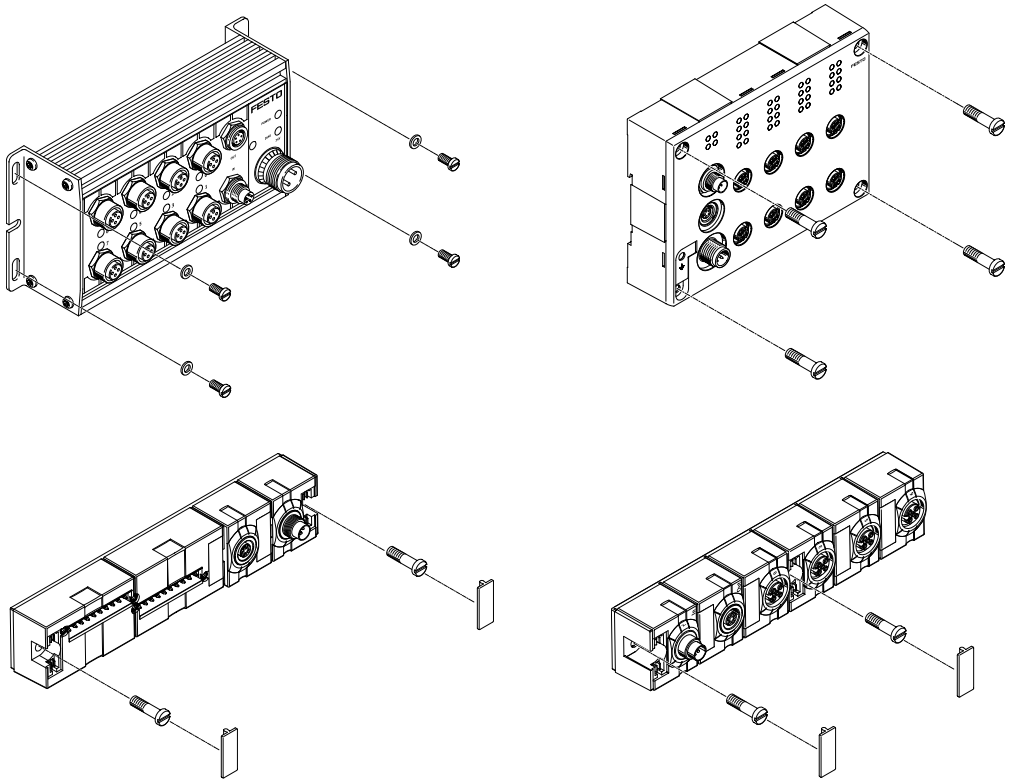

The CP modules (with screws up to 4 mm in diameter) can be mounted on even surfaces in almost any position using the mounting holes.

Note

The mounting holes on the compact CP modules are covered by inscription labels.

Key features – Inscription system

Inscription system

All CP modules have holders for inscription labels.

Inscription labels/label holders are not included in the scope of delivery and can be ordered separately.

The labels can be pre-assembled on request.

Sturdy CP modules

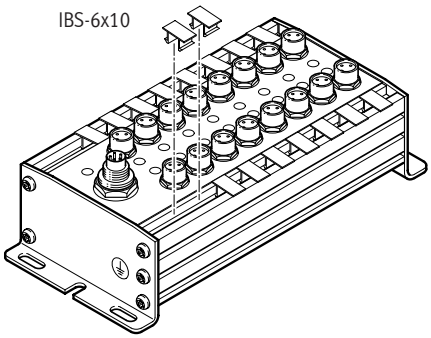

The sturdy CP modules have two slots in which the inscription labels IBS-6x10 (part no. 18576) can be fitted. At least one inscription label can be fitted per connection.

The IBS-6x10 are plastic clips that can be printed on, written on or affixed with labels.

Economical CP modules

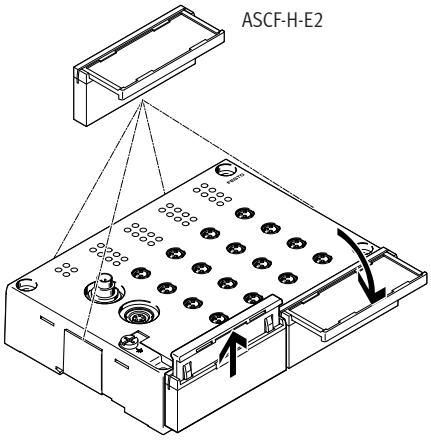

The economical CP modules have six fixtures on the side, each for one inscription label holder ASCF-H-E2 (part no. 547473).

The ASCF-H-E2 are transparent, hinged inscription label holders for holding premade paper inscription labels. The label can be read when the label holder is opened out.

Compact CP modules

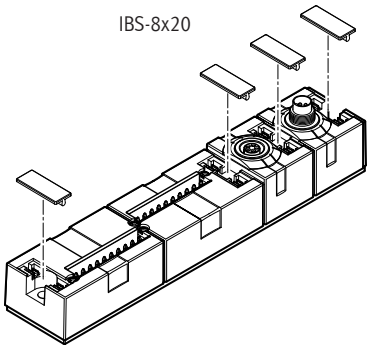

The compact CP modules have a holder for an inscription label IBS-8x20 (part o. 539388) for each connection.

The IBS-8x20 are plastic clips that can be printed on, written on or affixed with labels.

Key features – Power supply

Operating voltage and load current supply

The following functions are made available to the connected modules through the CP cable:
- Connection for data exchange
- Operating voltage for the internal electronics
- Load current supply for the connected inputs/sensors and/or outputs/actuators

CP-E...Z or output modules from the sturdy and the economical series have a separate load voltage supply:
- Less load on the CP interface and CP cable
- 0.5 A per output (max. 4 A supply per output module)
- 1 A per 8 inputs
- Separate disconnection of the consuming devices possible

Every module in the CPI system is protected separately against overload with electronic fuses.
The input modules without additional supply provide a maximum sensor supply of 500 mA in the sturdy design, 800 mA in the compact design and 700 mA in the economical design with 16 inputs and 1400 mA with 32 inputs.

The input modules with additional supply provide up to 2 A aggregate current for the connected sensors.

Example of circuits for additional power supply

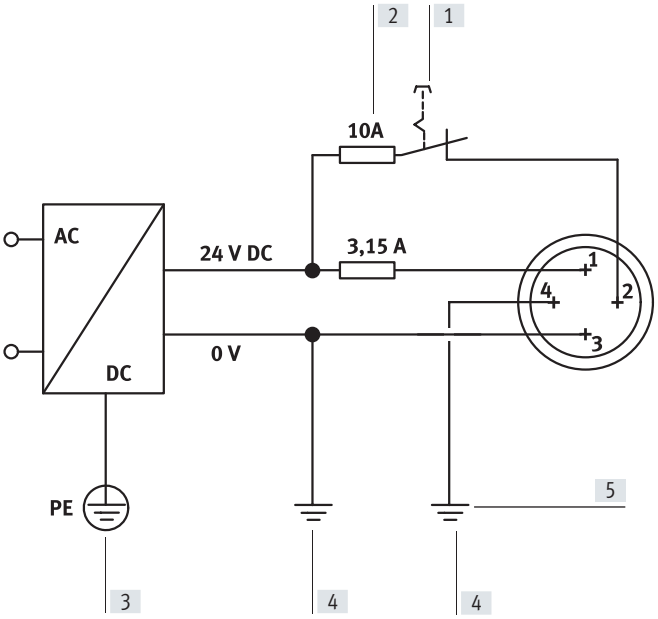

[1] Load voltage supply (can be disconnected separately)
[2] External fuses
[3] PE
[4] Equipotential bonding
[5] Earth connection pin 4, designed for 12 A

Pin allocation of plug for additional power supply

Pin allocation	Pin	Signal	Designation
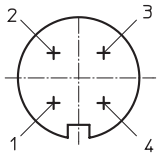	1	24 V DC	Supply for electronics and inputs
	2	24 V DC	Load supply for valves/outputs
	3	0 V	Equipotential bonding
	4	0 V	Earth terminal and equipotential bonding, rated for 12 A

Key features – Power supply

Power supply concept of the CPX terminal

Circuit diagram for M18 power supply/system supply (example)

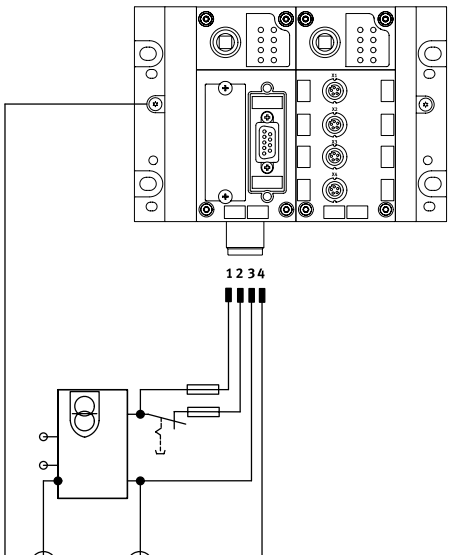

The use of decentralised devices on the fieldbus – particularly with a high degree of protection for direct machine mounting – demands a flexible power supply concept.
The CPX terminal makes it easier to connect all voltages via one socket.

A distinction is made between supply for
- electronics and sensors/inputs
- valves
- actuators/outputs

Selectable connection technology:
- M18
- 7/8"
- AIDA push-pull

Note

The CP interface connects the 0 V of the power supply for the electronics/inputs and the valves.

To prevent overloads, the power must therefore be supplied using just one power supply module or using power supply units with a common PEN conductor.

Interlinking blocks

Many applications require the voltage to be segmented into zones. This applies in particular to the separate disconnection of connected actuators (solenoid coils/outputs).

The separation of voltages for valves and the creation of different voltage segments for electrical outputs and sensors are supported by the different interlinking blocks of the CPX terminal:
- With system supply
- Without power supply
- With additional power for electrical outputs
- With additional supply for valves

The supply voltages are supplied using a
- 4-pin M18 plug
- 4-pin 7/8'' plug
- 5-pin 7/8'' plug
- AIDA push-pull, 5-pin

Note

The max. current is limited to 12 A with the 7/8" system supply.
When using a conventional pre-assembled cable, the max. current is limited to 8 A.

Key features – Diagnostics

General limits

System supply

The system supply provides the internal voltage for the entire CPX system with
- max. 16 A for electronics and sensors/inputs
- max. 16 A for actuators/outputs and valves

CP interface

The CP interface and the CP modules connected to the CP interface get their operating voltage from the connection for electronics and sensors/inputs.

The operating voltage for the sensors/actuators connected to the CP modules is supplied from the voltage for valves.

The CP interface supplies the connected CP modules with
- max. 1.6 A per CP string

Diagnostics

General

A comprehensive diagnostic function is available for each string.
The diagnostic information can either be detected via the LEDs on the module and then read out and evaluated via the controller software (non-fieldbus-specific) or displayed directly on the CPX terminal via the diagnostic interface and then evaluated and processed.

Diagnostics via LEDs

- Error in bus communication
- POWER, power supply indicator for internal electronics
- POWER V, load voltage indicator for valves
- 0 ... 3, CP string allocation changed or interrupted

There are also bus-specific LED displays.

Diagnostics via control program

- Configuration error
- Bus error
- Operating voltage failure
- Falling below voltage tolerance (valves)
- Short circuit in sensor voltage supply
- Operating voltage failure at the output modules
- Short circuit/overload at the output modules
- Connection to one or more CP modules interrupted (valve terminal, input/output modules)

Diagnostics via CPX terminal

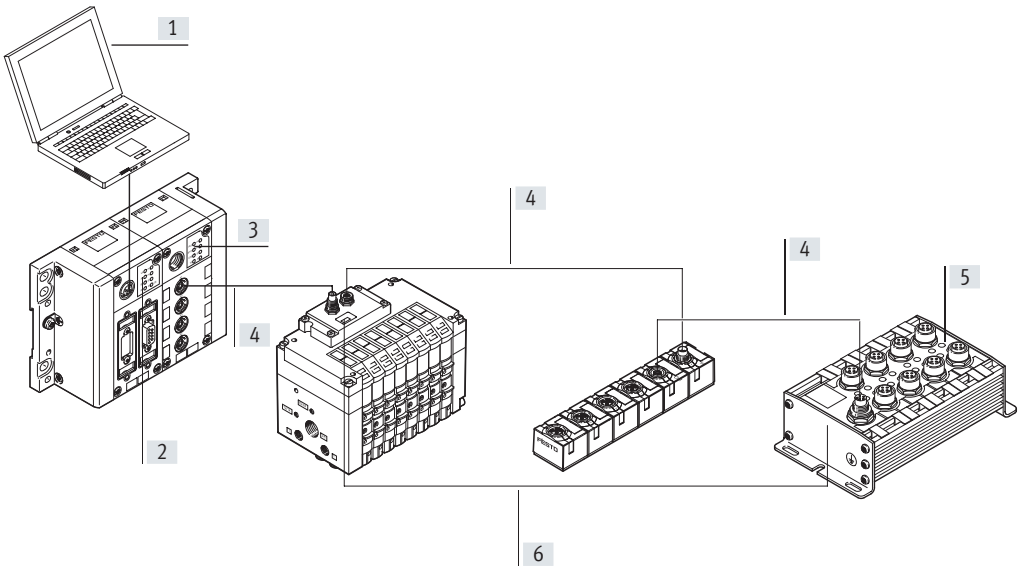

[1] Diagnostics via controller/bus node
[2] Bus-specific LEDs
[3] String diagnostics via LED on the CP interface
[4] Diagnostics via CP string
[5] Diagnostics via LED on CP module
[6] Status indicator on the CP module

Key features – CP interface

Diagnostics

Diagnostics via CP bus node

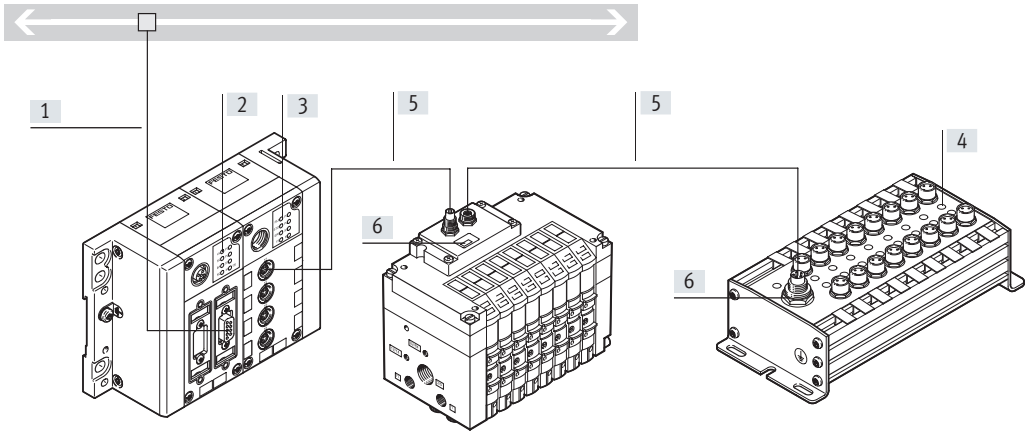

[1] Diagnostics via fieldbus
[2] Bus-specific LEDs
[3] String diagnostics via LED on the bus node
[4] Diagnostics via LED on CP module
[5] Diagnostics via CP string
[6] Status indicator on the CP module

Diagnostic LEDs on the CP modules

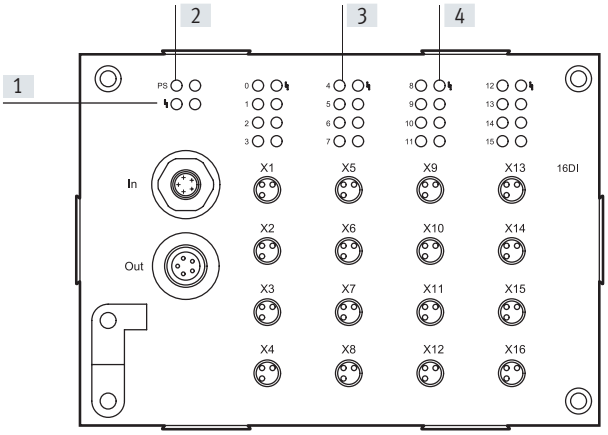

[1] Status LED CP communication (PS, green)
[2] Status LED (module) for short circuit/overload of sensor supply (red)
[3] Status LEDs for inputs (status indication, green)
[4] Status LED (group, only with CP-E16-...-EL) for short circuit/overload of sensor supply (red)

In addition to the status indication per module and per individual channel/input, the economical modules with 16 inputs additionally have a status indication for a group of four inputs. The following inputs are combined into groups of four:

- 0 ... 3
- 4 ... 7
- 8 ... 11
- 12 ... 15

Parameterisation

The addresses to the individual actuators/outputs or sensors/inputs, which are connected to the CP modules, are allocated in accordance with the bus node or CPX-CEC used (exception: INTERBUS node).
Address allocation is performed in accordance with the following rules:

- One CP interface provides four strings with a total of 128 input and 128 output addresses.
- A used string occupies 32 input and 32 output addresses.
- The addresses are permanently allocated to the strings and CP modules in ascending order.
- Unused address space remains reserved for future extensions.

The CP interface checks the configuration of the connected modules each time the system is switched on and during operation. If a deviation from the saved configuration is detected, an appropriate message is output via the controller software and displayed via LED.
The configuration detected is stored by pressing the Save button (after the operating voltage is switched on at the CP interface).

The configuration is stored each time the CP interface is switched off and back on.
There is an option to replace a connected CP module with an identical module during operation. Removal of more than one module from the current configuration will be detected as an error; the address spaces of these modules will no longer be actuated.

Selection aid

System selection aid	Modules per string	Outputs/inputs per string	Modules with CP functionality	Modules with CPI functionality	String length [m]
CP system	2	16/16	0 ... 1 input module 0 ... 1 output module	0 ... 1 input module 0 ... 1 output module	0 ... 10
CPI system	4	32/32	0 ... 1 input module 0 ... 1 output module	0 ... 4 input modules 0 ... 4 output modules	0 ... 10

Module selection aid	Functionality		Additional power supply	Address requirement		Max. current consumption [A]	→ Page/Internet
	CP	CPI		Inputs	Outputs		
Input modules							
CP-E16-M8	■	–	–	16	–	0.54	26
CP-E16-M12x2-5POL	■	–	–	16	–	0.59	26
CP-E16-M8-Z	■	–	■	16	–	1.04	27
CP-E16-M8-EL	■	■	–	16	–	0.7	32
CP-E16-M12-EL	■	■	–	16	–	0.7	32
CP-E08-M12-CL	■	■	–	8	–	0.835	37
CP-E08-M8-CL	■	■	–	8	–	0.835	37
CP-E16-KL-CL	■	■	–	16	–	0.835	37
Output modules							
CP-A08-M12-5POL	■	–	■	–	8	2.09	43
CP-A08-M12-EL-Z	■	■	■	–	8	4	46
CP-A04-M12-CL	■	■	–	–	4	1.035	50
Connecting cables							
KVI-CP-3-...	■	■	–	–	–	1.6	kvi-cp
Valve terminals							
CPV10-FB-4	■	■	–	–	16	0.327	cpv
CPV10-FB-6	■	■	–	–	16	0.465	cpv
CPV10-FB-8	■	■	–	–	16	0.604	cpv
CPV14-FB-4	■	■	–	–	16	0.419	cpv
CPV14-FB-6	■	■	–	–	16	0.603	cpv
CPV14-FB-8	■	■	–	–	16	0.788	cpv
CPV18-FB-4	■	–	–	–	16	0.624	cpv
CPV18-FB-6	■	–	–	–	16	0.911	cpv
CPV18-FB-8	■	–	–	–	16	1.197	cpv
MPA-S	–	■	■	–	32	3.25	mpa-s
CPV-SC	–	■	–	–	16	0.875	cpv-sc
CTEU-CP	–	■	–	0/16/32	0/16/32	3.4	54

Selection aid

Accessory selection aid

Connection M8, 3-pin

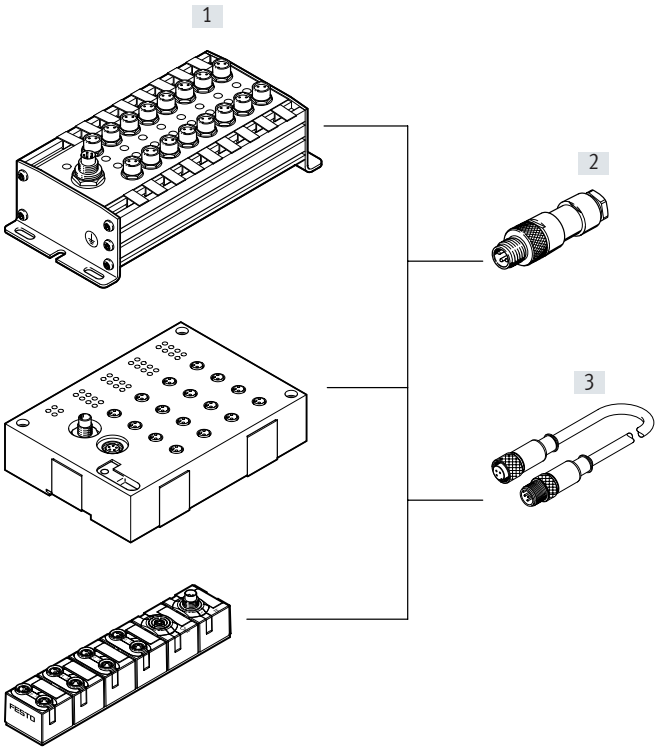

Note

Festo delivers pre-assembled M8/M12 connecting cables (NEBU modular system) on request:

- Tailored to the application
- Perfectly fitting
- Easy to install

[1] Input modules
Type
CP-E16-M8
CP-E16-M8-Z
CP-E16-M8-EL
CP-E08-M8-CL

Plug/connecting cable	
Type	Connection technology
[2] Plugs	
SEA-GS-M8	Solder lug
SEA-3GS-M8-S	Screw terminal
[3] Connecting cable	
NEBU-...-M8G3	M8 socket, 3-pin
	M8 socket, 4-pin
	M12 socket, 5-pin
	Open cable end

Selection aid

Accessory selection aid

Connection for inputs M12, 5-pin

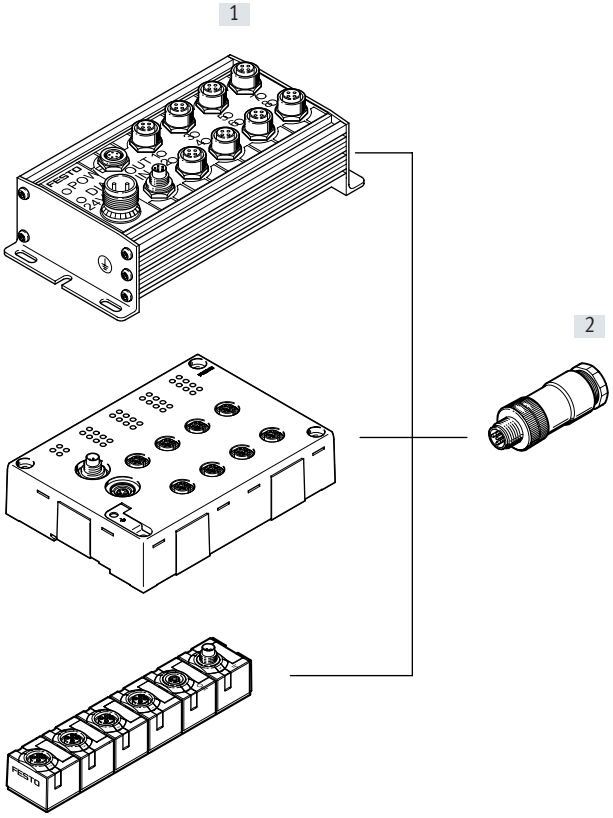

[1] Input modules	[2] Plugs	
Type	Type	Connection technology
CP-E16-M12x2-5POL CP-E16N-M12-EL CP-E08-M12-CL	SEA-M12-5GS-PG7	Screw terminal
	SEA-5GS-11-DUO	Screw terminal

Connection for inputs, tension-spring socket

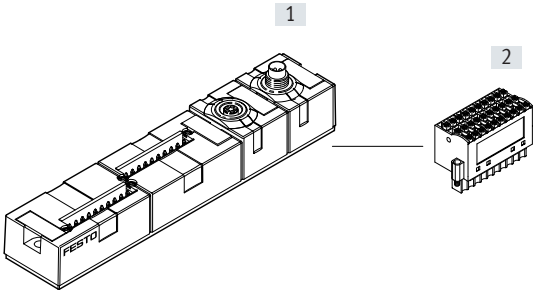

[1] Input modules	[2] Plugs	
Type	Type	Connection technology
CP-E16-KL-CL	PS1-SAC31-30POL+LED	Screw-in tension-spring socket

Selection aid

Accessory selection aid

Connection for outputs M12, 5-pin

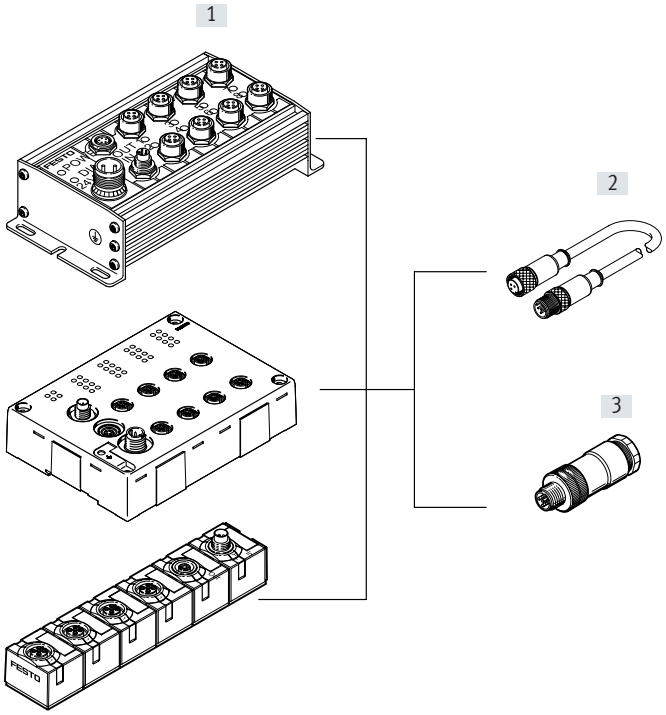

[1] Output modules
Type
CP-A08-M12-5POL
CP-A08-M12-EL-Z
CP-A04-M12-CL

Plug/connecting cable	
Type	Connection technology
[2] Connecting cable	
NEBU-...-M12G5 (modular system for a choice of connecting cables)	M12 socket, 5-pin
	Open cable end
[3] Plugs	
SEA-M12-5GS-PG7	Screw terminal
SEA-5GS-11-DUO	Screw terminal

Datasheet – Input modules CP-E16

Function
Digital input modules make it easier to connect proximity switches or other 24 V DC sensors (inductive, capacitive, etc.).
M12 plugs with double allocation are separated using a sensor/actuator distributor.

Area of application
- Input modules for 24 V DC sensor signals
- M8 and M12 plugs, single allocation with 16 connections, double allocation with 8 connections
- M12 plug, 5-pin
- The input statuses for each input signal are indicated via an assigned LED.
- 24 V DC supply provided for all connected sensors
- Diagnostic LED for short circuit/undervoltage of sensor supply.
- Diagnostic LED for short circuit/interruption of external sensor supply with CP-E-16-M8-Z.

General technical data				
Type			CP-E16-M8 Positive switching	CP-E16-M12x2-5POL Positive switching
Number of inputs			16	
Allocation of inputs			Single allocation	Double allocation
Sensor connection type			16x M8, 3-pin	8x M12, 5-pin
Power supply 24 V DC			Coming from the bus node	
Intrinsic current consumption of electronics		[mA]	40	90
Input current at 24 V DC (from sensor)		[mA]	Typically 8	Typically 6
Fuse protection for sensors and electronics modules			Internal electronic short circuit protection	
Max. current consumption of sensor supply, aggregate current		[A]	Max. 0.5	
Sensor supply voltage		[V DC]	24 ±25%	
Reverse-polarity protection			For logic and sensor voltage	
Galvanic isolation			None	
Switching level	Signal 0	[V]	≤5	≤6
	Signal 1	[V]	≥11	≥8.6
Input delay		[ms]	Typically 5	Typically 3
Switching logic			PNP	PNP
Input characteristic			To IEC 1131-2	
Connection to bus node			Via pre-assembled cables	
Degree of protection to EN 60529			IP65 (when fully plugged in or fitted with protective cover)	
Temperature range	Operation	[°C]	−5 ... +50	
	Storage	[°C]	−20 ... +70	
Material			Die-cast aluminium	
Note on materials			RoHS-compliant	
Dimensions		[mm]	148.9 x 66 x 47.9	140.9 x 78 x 55.2
Weight		[g]	400	500

Datasheet – Input modules CP-E16

General technical data				
Type			CP-E16-M8-Z Positive and negative switching	
Number of inputs			16	
Allocation of inputs			Single allocation	
Sensor connection type			16x M8, 3-pin	
Power supply 24 V DC			Coming from the bus node, connection for additional sensor supply	
Intrinsic current consumption of electronics		[mA]	40	
Input current at 24 V DC (from sensor)		[mA]	Typically 8	
Fuse protection for sensors and electronics modules			Electronic short circuit protection per group	
Max. current consumption of sensor supply, aggregate current		[A]	Max. 1 per group of 8 inputs	
Sensor supply voltage		[V DC]	24 ±25%	
Reverse-polarity protection			For logic and sensor voltage	
Galvanic isolation			None	
Switching level			PNP	NPN
	Signal 0	[V]	≤6	≥−8.6
	Signal 1	[V]	≥8.6	≤−6
Input delay		[ms]	Typically 3	
Switching logic			PNP/NPN	
Input characteristic			To IEC 1131-2	
Connection to bus node			Via pre-assembled cables	
Degree of protection to EN 60529			IP65 (when fully plugged in or fitted with protective cover)	
Temperature range	Operation	[°C]	−5 ... +50	
	Storage	[°C]	−20 ... +70	
Material			Die-cast aluminium	
Note on materials			RoHS-compliant	
Dimensions		[mm]	216.9 x 66 x 50.6	
Weight		[g]	420	

Certifications		
Type		**CP-E16-M...**
ATEX category for gas		II 3G
Type of ignition protection for gas		Ex na II T5 X Gc
ATEX category for dust		II 3D
Type of ignition protection for dust		Ex tc IIIC T80°C X Dc IP65
ATEX ambient temperature	[°C]	−5 ≤ Ta ≤ +50
CE marking (see declaration of conformity)		To EU EMC Directive[1)] To EU Explosion Protection Directive (ATEX)
KC mark		KC EMC
Certification		c UL us - Recognized (OL) C-Tick

1) For information about the area of use, see the EC declaration of conformity at: www.festo.com/catalogue/... → Support/Downloads.
If the devices are subject to usage restrictions in residential, commercial or light-industrial environments, further measures for the reduction of the emitted interference may be necessary.

Datasheet – Input modules CP-E16

Connection and display components
CP-E16-M12x2-5POL

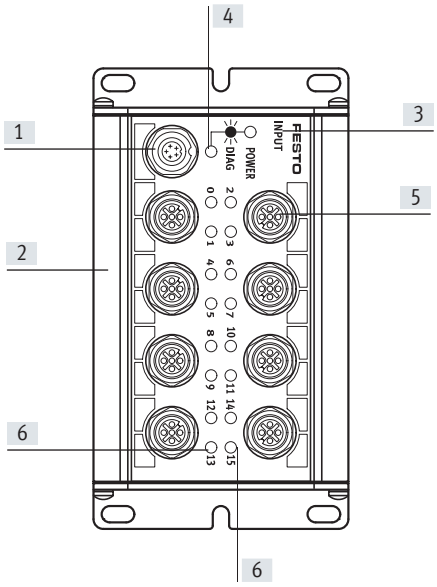

[1] CP connection
[2] Slot for identification labels (IBS-6x10)
[3] Identification of input type: -INPUT-P for PNP inputs
[4] Status LED (green)
[5] Sensor connections
[6] Green LED for status indication (one LED per input)

Pin allocation for sensor connections CP-E16-M12x2-5Pol

Pin allocation	Pin	Signal	Designation	Pin	Signal
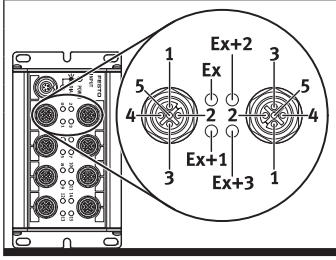	1	24 V	Operating voltage 24 V	1	24 V
	2	Ix+1*	Sensor signal	2	Ix+3*
	3	0 V	Operating voltage 0 V	3	0 V
	4	Ix*	Sensor signal	4	Ix+2*
	5	Ground	Earth terminal	5	Ground

* Ix = Input x

Datasheet – Input modules CP-E16

Connection and display components

CP-E16-M8-Z

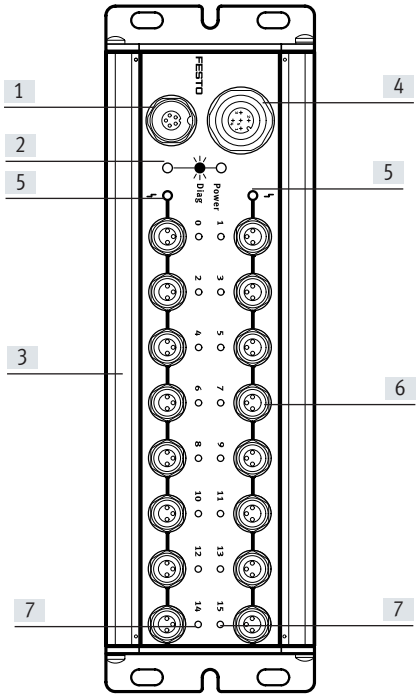

[1] CP connection
[2] Status LED (green)
[3] Slot for identification labels (IBS-6x10)
[4] Connection for the power supply to the external sensors
[5] Red LED for indicating short circuit or failure of the sensor voltage (one LED per input group)
[6] Sensor connections
[7] Green LED for status indication (one LED per input)

Pin allocation for external sensor supply CP-E16-M8-Z

Pin allocation	Pin	Signal	Designation
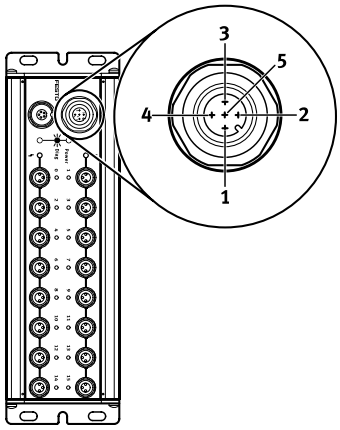	1	24 V DC ±25%	Operating voltage
	2	PNP/NPN	Coding with negative/positive switching: • PNP operation (pin 2 and 3 bridged) • NPN operation (pin 2 and 1 bridged)
	3	0 V	Operating voltage 0 V
	4	n.c.	Not connected
	5	Ground	Earth terminal

Note

External sensor supply for CP-E16-M8-Z: Specified for PNP or NPN operation (type CP-E16-M8-Z).
The input module provides PNP or NPN inputs. You can determine either PNP or NPN operation by installing a bridge in the socket of the sensor supply connection.

Pin allocation – Sensor connections CP-E16-M8-Z

Pin allocation	Pin	Signal	Designation	Pin	Signal
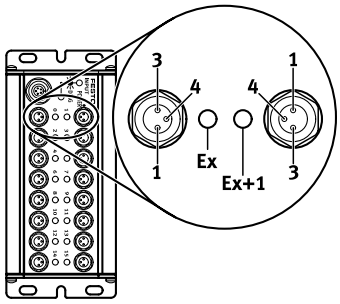	1	24 V	Operating voltage 24 V	1	24 V
	3	0 V	Operating voltage 0 V	3	0 V
	4	Ix*	Sensor signal	4	Ix+1*

* Ix = Input x

Datasheet – Input modules CP-E16

Connection and display components
CP-E16-M8

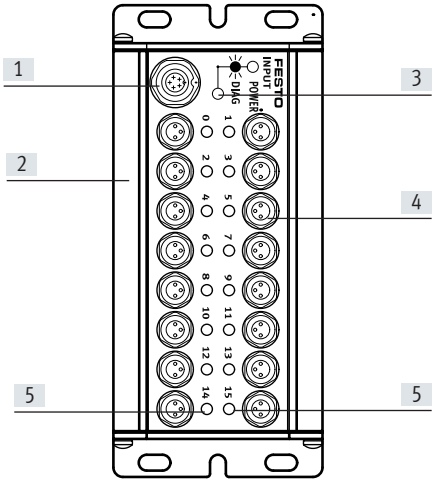

[1] CP connection
[2] Slot for identification labels (IBS-6x10)
[3] Status LED (green)
[4] Sensor connections
[5] Green LED for status indication (one LED per input)

Pin allocation – Sensor connections CP-E16-M8

Pin allocation	Pin	Signal	Designation	Pin	Signal
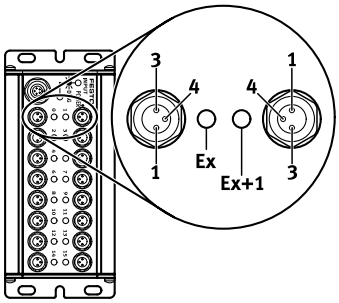	1	24 V	Operating voltage 24 V	1	24 V
	3	0 V	Operating voltage 0 V	3	0 V
	4	Ix*	Sensor signal	4	Ix+1*

* Ix = Input x

Accessories – Input modules CP-E16

Ordering data Designation					Part no.	Type
Input modules						
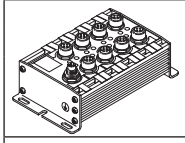	Positive switching				**18205**	**CP-E16-M8**
	Positive switching				**175561**	**CP-E16-M12x2-5POL**
	Positive and negative switching				**189670**	**CP-E16-M8-Z**
Power supply						
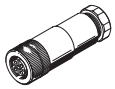	Power supply socket, straight, M12x1, 5-pin				**18324**	**FBSD-GD-9-5POL**
Sensor plug						
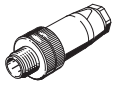	Plug, straight socket, M12x1		5-pin	PG7	**175487**	**SEA-M12-5GS-PG7**
			4-pin	PG7	**18666**	**SEA-GS-7**
			4-pin	2.5 mm² O.D.	**192008**	**SEA-4GS-7-2.5**
	Plug, straight, M8x1		3-pin	Solderable	**18696**	**SEA-GS-M8**
				Screw-in	**192009**	**SEA-3GS-M8-S**
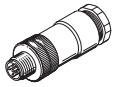	Plug for 2 connecting cables, M12x1, PG11		4-pin		**18779**	**SEA-GS-11-DUO**
			5-pin		**192010**	**SEA-5GS-11-DUO**
Connecting cables						
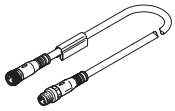	Connecting cable M8-M8	3-pin	Straight plug/ straight socket	0.5 m	**541346**	**NEBU-M8G3-K-0.5-M8G3**
				1.0 m	**541347**	**NEBU-M8G3-K-1-M8G3**
				2.5 m	**541348**	**NEBU-M8G3-K-2.5-M8G3**
				5.0 m	**541349**	**NEBU-M8G3-K-5-M8G3**
	Modular system for a choice of connecting cables				**–**	**NEBU-...** → Internet: nebu
Mounting						
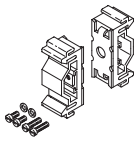	Mounting for H-rail				**170169**	**CP-TS-HS35**
User documentation						
	User documentation for input/output modules			German	**165125**	**P.BE.-CPEA-DE**
				English	**165225**	**P.BE.-CPEA-EN**
				French	**165127**	**P.BE.-CPEA-FR**
				Italian	**165157**	**P.BE.-CPEA-IT**
				Spanish	**165227**	**P.BE.-CPEA-ES**

Datasheet – Input modules CP-E...-EL

Function
Digital input modules make it easier to connect proximity switches or other 24 V DC sensors (inductive, capacitive, etc.).
Plugs with double allocation are separated using a sensor/actuator distributor.

Area of application
- Input modules for 24 V DC sensor signals
- M8 and M12 connection technology
- Display of the input statuses for each input signal via an assigned LED
- Operating voltage supply 24 V DC for all connected sensors
- Diagnostic LED for short circuit/overload of sensor supply
- Circumferential labelling with large, hinged inscription label
- Earthing plate and H-rail mounting already integrated

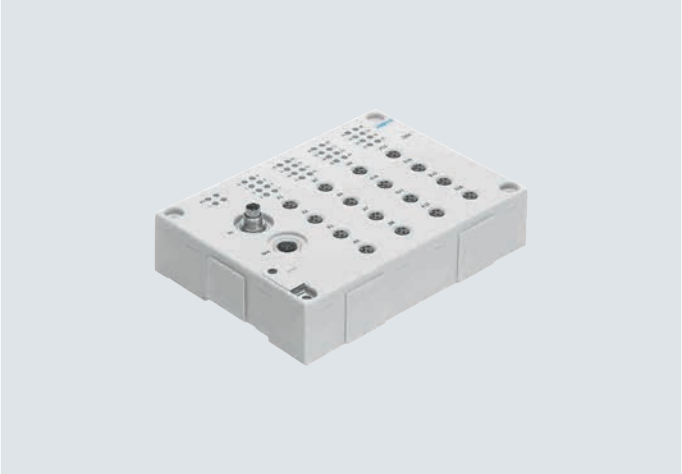

General technical data				
Type			CP-E16-M12-EL Positive switching	CP-E16-M8-EL Positive switching
Number of inputs			16	
Allocation of inputs			Double allocation	Single allocation
Sensor connection type			8x M12, 5-pin	16x M8, 3-pin
Power supply 24 V DC			Via CP connection	
Intrinsic current consumption at operating voltage		[mA]	Typically 75	
Fuse protection (short circuit)			Internal electronic fuse protection for each group	
Max. aggregate current per module		[A]	0.7	
Nominal operating voltage			24	
Operating voltage range		[V DC]	18 ... 30	
Residual ripple load voltage		[Vss]	4	
Electrical isolation between channels			None	
Switching level	Signal 0	[V]	≤ 6	
	Signal 1	[V]	≥ 8.6	
Debounce time at inputs		[ms]	3 (0.5 ms, 10 ms, 20 ms parameterisable)	
Switching logic			PNP	
Input characteristic			To IEC 1131-T2	
Connection to bus node			Via pre-assembled cables	
Diagnostics			CP communication	
			Short circuit/overload	
			Undervoltage	
LED displays			2 module diagnostics	2 module diagnostics
			16 channel status	16 channel status
			4 group diagnostics	4 group diagnostics

Datasheet – Input modules CP-E...-EL

Materials	
Housing	Reinforced PA
Cover	Reinforced PA
Note on materials	RoHS-compliant
PWIS conformity	VDMA24364-B2-L

Operating and environmental conditions		
Degree of protection to EN 60529		IP65/IP67 (when fully plugged in or fitted with protective cap)
Ambient temperature	[°C]	–5 ... +50
Storage temperature	[°C]	–20 ... +70
Corrosion resistance class CRC[1)]		1
CE marking (see declaration of conformity)		To EU EMC Directive[2)]
		To EU RoHS Directive[2)]
UKCA marking (see declaration of conformity)		To UK instructions for EMC[2)]
		To UK RoHS instructions[2)]
KC mark		KC EMC
Certification		c UL us listed (OL)
		RCM mark
		C-Tick

1) Corrosion resistance class CRC 1 to Festo standard FN 940070
Low corrosion stress. Dry indoor application or transport and storage protection. Also applies to parts behind coverings, in the non-visible interior area, or parts that are covered in the application (e.g. drive trunnions).

2) For information about the area of use, see the EC declaration of conformity at: www.festo.com/catalogue/... → Support/Downloads.
If the devices are subject to usage restrictions in residential, commercial or light-industrial environments, further measures for the reduction of the emitted interference may be necessary.

Datasheet – Input modules CP-E...-EL

Connection and display components
CP-E16-M12-EL

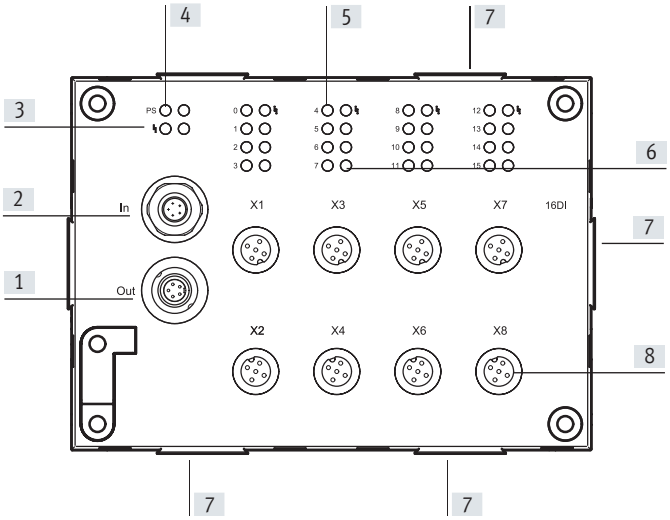

[1] CP connection, outgoing
[2] CP connection, incoming
[3] Status LED (module) for short circuit/overload of sensor supply (red)
[4] Status LED for CP communication (green)
[5] Status LEDs for inputs (status indication, green)
[6] Status LED (group) for short circuit/overload of sensor supply (red)
[7] Fixture for inscription label holder ASCF-H-E2
[8] Sensor connections (2 inputs per socket)

Pin allocation for sensor connections CP-E16-M12-EL

Pin allocation

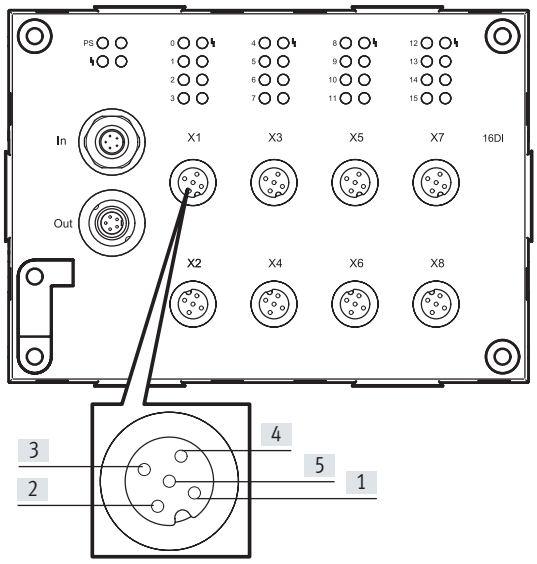

Pin	Signal	Designation
1	24 V	Operating voltage 24 V
2	Ix+1*	Sensor signal
3	0 V	Operating voltage 0 V
4	Ix*	Sensor signal
5	Ground	Earth terminal

* Ix = Input x

Datasheet – Input modules CP-E...-EL

Connection and display components

CP-E16-M8-EL

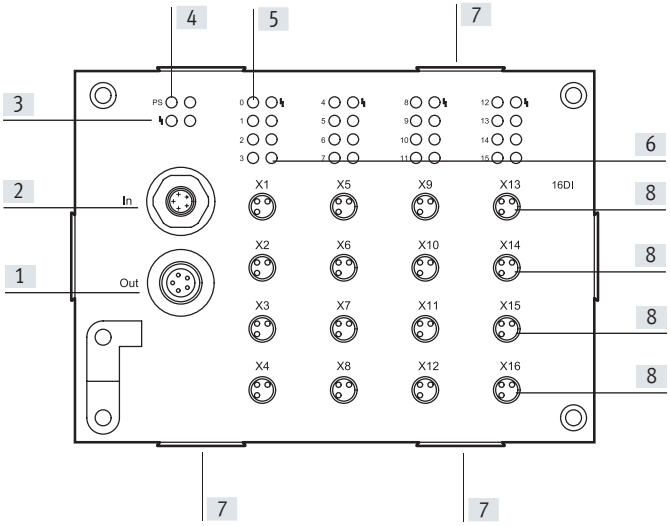

[1] CP connection, outgoing
[2] CP connection, incoming
[3] Status LED (module) for short circuit/overload of sensor supply (red)
[4] Status LED for CP communication (green)
[5] Status LEDs for inputs (status indication, green)
[6] Status LED (group) for short circuit/overload of sensor supply (red)
[7] Fixture for inscription label holder ASCF-H-E2
[8] Sensor connections (1 input per socket)

Pin allocation for sensor connections CP-E16-M8-EL

Pin allocation

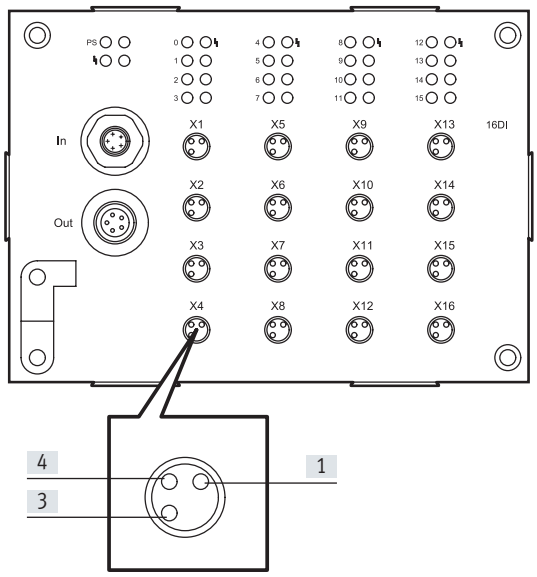

Pin	Signal	Designation
1	24 V	Operating voltage 24 V
3	0 V	Operating voltage 0 V
4	Ix*	Sensor signal

* Ix = Input x

Accessories – Input modules CP-E...-EL

Ordering data Designation				Part no.	Type
Input modules					
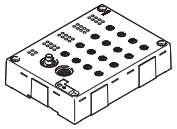	Positive switching			**546923**	**CP-E16-M12-EL**
	Positive switching			**546922**	**CP-E16-M8-EL**
Plug					
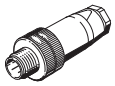	Plug, straight socket, M12x1	5-pin	PG7	**175487**	**SEA-M12-5GS-PG7**
		4-pin	PG7	**18666**	**SEA-GS-7**
		4-pin	2.5 mm² O.D.	**192008**	**SEA-4GS-7-2.5**
	Plug, straight, M8x1	3-pin	Solderable	**18696**	**SEA-GS-M8**
			Screw-in	**192009**	**SEA-3GS-M8-S**
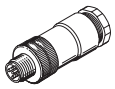	Plug for 2 connecting cables, M12x1, PG11	4-pin		**18779**	**SEA-GS-11-DUO**
		5-pin		**192010**	**SEA-5GS-11-DUO**
Distributors					
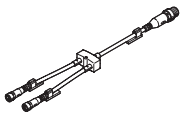	Modular system for all types of sensor/actuator distributor			**–**	**NEDY-...** ➔ Internet: nedy
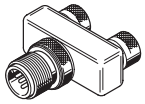	Push-in T-connector	1x plug M8, 4-pin	2x socket M8, 3-pin	**8005312**	**NEDY-L2R1-V1-M8G3-N-M8G4**
		1x plug M12, 4-pin	2x socket M8, 3-pin	**8005311**	**NEDY-L2R1-V1-M8G3-N-M12G4**
			2x socket M12, 5-pin	**8005310**	**NEDY-L2R1-V1-M12G5-N-M12G4**
Inscription label holders					
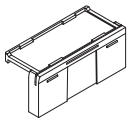	Inscription label holders for EL modules, bag of 10			**547473**	**ASCF-H-E2**
User documentation					
	User documentation for input/output modules		German	**539299**	**P.BE.-CPEA-CL-DE**
			English	**539300**	**P.BE.-CPEA-CL-EN**
			French	**539302**	**P.BE.-CPEA-CL-FR**
			Italian	**539303**	**P.BE.-CPEA-CL-IT**
			Spanish	**539301**	**P.BE.-CPEA-CL-ES**

Datasheet – Input modules CP-E...-CL

Function
Digital input modules make it easier to connect proximity switches or other 24 V DC sensors (inductive, capacitive, etc.).
Plugs with double allocation are separated using a sensor/actuator distributor.

Area of application
- Input modules for 24 V DC sensor signals
- M8 and M12 plug connection technology
- M12 input module, inputs with double allocation. M8 inputs with single allocation
- M12 plug, 5-pin
- The input statuses for each input signal are indicated via an assigned LED.
- 24 V DC supply provided for all connected sensors
- Diagnostic LED for short circuit/ undervoltage of sensor supply.
- Modules support the CPI functionality (only in combination with the CPX CP interface)

General technical data					
Type			CP-E08-M12-CL Positive switching	CP-E08-M8-CL Positive switching	CP-E16-KL-CL Positive switching
Number of inputs			8		16
Allocation of inputs			Double allocation	Single allocation	
Sensor connection type			4x M12, 5-pin	8x M8, 3-pin	Spring-loaded terminals or screw terminals
Power supply 24 V DC			From the bus node, basic unit, CP interface, etc.		
Intrinsic current consumption of electronics		[mA]	Typically 35 (inputs not connected)		
Input current at 24 V DC (from sensor)		[mA]	Typically 6		
Fuse protection for sensors and electronics modules			Internal electronic short circuit protection		
Max. current consumption for sensor supply, aggregate current		[A]	Max. 0.8		
Nominal operating voltage for sensors			24		
Operating voltage range for sensors		[V DC]	18 ... 30		
Reverse-polarity protection			For logic and sensor supply		
Galvanic isolation			None		
Switching level	Signal 0	[V]	≤5		
	Signal 1	[V]	≥–11		
Input delay		[ms]	Typically 3		
Switching logic			PNP		
Input characteristic			To IEC 1131-2		
Connection to bus node			Via pre-assembled cables		
Diagnostics			Undervoltage		
			Short circuit/overload in sensor supply		

Datasheet – Input modules CP-E...-CL

General technical data				
Type		CP-E08-M12-CL Positive switching	CP-E08-M8-CL Positive switching	CP-E16-KL-CL Positive switching
Note on materials		RoHS-compliant		
Dimensions (WxLxH)	[mm]	151 x 30 x 25		
Weight	[g]	165	190	145

Operating and environmental conditions				
Type		**CP-E08-M12-CL**	**CP-E08-M8-CL**	**CP-E16-KL-CL**
Degree of protection to EN 60529		IP65/IP67 (when fully plugged in or fitted with protective cap)		IP20
Ambient temperature	[°C]	–5 ... +50		
Storage temperature	[°C]	–20 ... +70		
Corrosion resistance class CRC[1)]		1		
CE marking (see declaration of conformity)		To EU EMC Directive[2)]		
		To EU RoHS Directive		
		To EU Explosion Protection Directive (ATEX)		–
KC mark		KC EMC		
Certification		c UL us listed (OL)		
		RCM		

1) Corrosion resistance class CRC 1 to Festo standard FN 940070
Low corrosion stress. Dry indoor application or transport and storage protection. Also applies to parts behind coverings, in the non-visible interior area, or parts that are covered in the application (e.g. drive trunnions).

2) For information about the area of use, see the EC declaration of conformity at: www.festo.com/catalogue/... ➔ Support/Downloads.
If the devices are subject to usage restrictions in residential, commercial or light-industrial environments, further measures for the reduction of the emitted interference may be necessary.

ATEX certifications				
Type		CP-E08-M12-CL	CP-E08-M8-CL	CP-E16-KL-CL
ATEX category for gas		II 3G		–
Type of ignition protection for gas		Ex nA IIC T6 X Gc		–
ATEX category for dust		II 3D		–
Type of ignition protection for dust		Ex tc IIIC T70°C X Dc IP67		–
ATEX ambient temperature	[°C]	–5 ≤ Ta ≤ +50		–

Note
When operating device combinations in potentially explosive areas, the lowest common zone, temperature class and ambient temperature of the individual devices determine the possible use of the entire module.

Datasheet – Input modules CP-E...-CL

Connection and display components

CP-E08-M12-CL

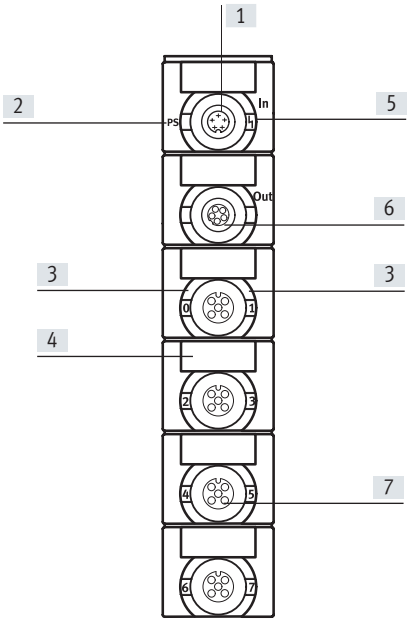

[1] CP connection, incoming
[2] Status LED (green)
[3] Green LED for status indication (one LED per input)
[4] Holder for inscription label (IBS-8x20)
[5] Red LED for short circuit/overload display
[6] CP connection, outgoing
[7] Sensor connections

Pin allocation for sensor connections CP-E08-M12-CL

Pin allocation	Pin	Signal	Designation
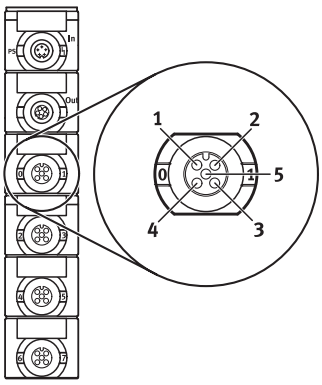	1	24 V	Operating voltage 24 V
	2	Ix+1*	Sensor signal
	3	0 V	Operating voltage 0 V
	4	Ix*	Sensor signal
	5	Ground	Earth terminal

* Ix = Input x

Datasheet – Input modules CP-E...-CL

Connection and display components
CP-E08-M8-CL

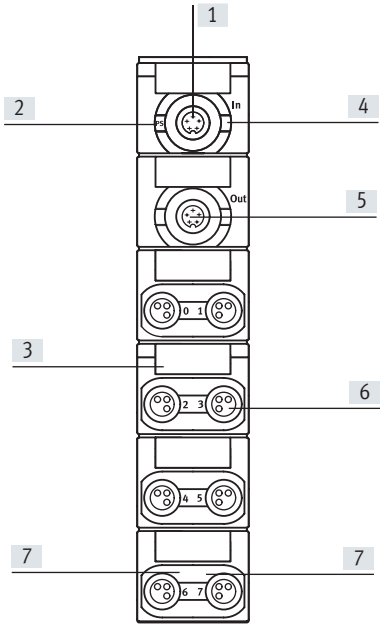

[1] CP connection, incoming
[2] Status LED (green)
[3] Holder for inscription label (IBS-8x20)
[4] Red LED for short circuit/overload display
[5] CP connection, outgoing
[6] Sensor connections
[7] Green LED for status indication (one LED per input)

Pin allocation for sensor connections CP-E08-M8-CL

Pin allocation	Pin	Signal	Designation	Pin	Signal
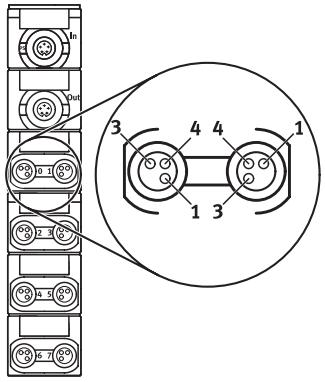	1	24 V	Operating voltage 24 V	1	24 V
	3	0 V	Operating voltage 0 V	3	0 V
	4	Ix*	Sensor signal	4	Ix+1*

* Ix = Input x

Datasheet – Input modules CP-E...-CL

Connection and display components
CP-E16-KL-CL

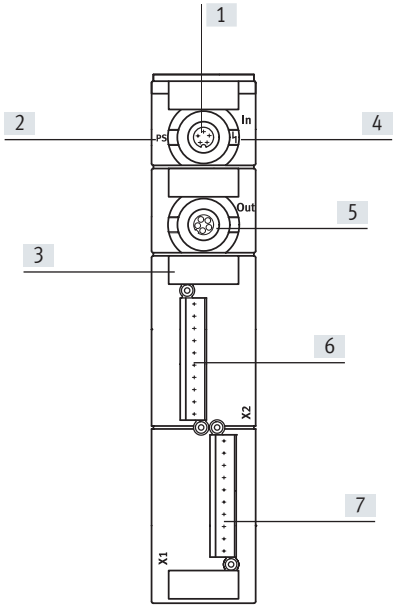

[1] CP connection, incoming
[2] Status LED (green)
[3] Holder for inscription label (IBS-8x20)
[4] Red LED for short circuit/overload display
[5] CP connection, outgoing
[6] Sensor connections, plug X2
[7] Sensor connections, plug X1

Pin allocation – Sensor supply CP-E16-KL-CL

Pin allocation	Pin	Signal	Designation	Pin	Signal
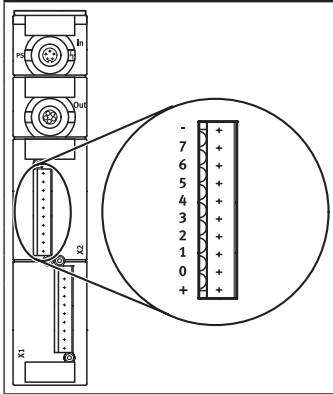	**Plug X1**			**Plug X2**	
	+	24 V DC	Operating voltage	+	24 V DC
	0	I 0	Connections for sensors	0	I 8
	1	I 1		1	I 9
	2	I 2		2	I 10
	3	I 3		3	I 11
	4	I 4		4	I 12
	5	I 5		5	I 13
	6	I 6		6	I 14
	7	I 7		7	I 15
	–	0 V DC		-	0 V DC

Note

8 sensors can be connected to each of the connections X1 and X2.
When using the three-row plug PS1-SAC31-30POL+LED, it is possible to use the second and third row of contacts for the sensor power supply via a bridge.

Plug connection for power supply for sensors (PS1-SAC31-30POL+LED)

	Connection row 0			Connection row 1		Connection row 2	
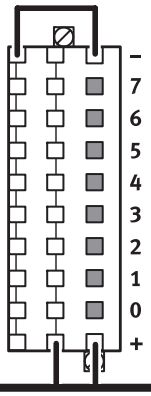	–	0 V DC	Operating voltage	-	n.c.	-	Bridge
	7	I x+7	Connections for sensors	7	24 V DC	7	0 V DC
	6	I x+6		6		6	
	5	I x+5		5		5	
	4	I x+4		4		4	
	3	I x+3		3		3	
	2	I x+2		2		2	
	1	I x+1		1		1	
	0	I x		0		0	
	+	24 V DC	Operating voltage	+	Bridge	+	n.c.

Accessories – Input modules CP-E...-CL

Ordering data Designation				Part no.	Type
Input modules					
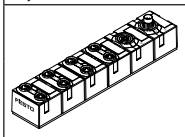	Positive switching			**538787**	**CP-E08-M12-CL**
	Positive switching			**538788**	**CP-E08-M8-CL**
	Positive switching			**538789**	**CP-E16-KL-CL**
Sensor plug					
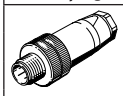	Plug, straight socket, M12x1	5-pin	PG7	**175487**	**SEA-M12-5GS-PG7**
		4-pin	PG7	**18666**	**SEA-GS-7**
		4-pin	2.5 mm² O.D.	**192008**	**SEA-4GS-7-2.5**
	Plug, straight, M8x1	3-pin	Solderable	**18696**	**SEA-GS-M8**
			Screw-in	**192009**	**SEA-3GS-M8-S**
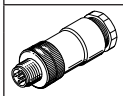	Plug for 2 connecting cables, M12x1, PG11	4-pin		**18779**	**SEA-GS-11-DUO**
		5-pin		**192010**	**SEA-5GS-11-DUO**
Connection sets for sensors					
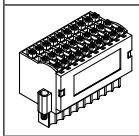	Plug, screw-in tension-spring socket with LED	3-row, 30-pin		**197162**	**PS1-SAC31-30POL+LED**
Distributors					
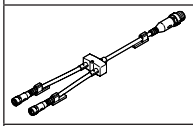	Modular system for all types of sensor/actuator distributor			**–**	**NEDY-...** → Internet: nedy
Connecting cable					
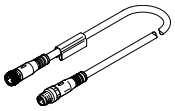	Modular system for a choice of connecting cables			**–**	**NEBU-...** → Internet: nebu
Protective caps					
	Cover cap for closing off unused connections (10 pieces)		For M8 connections	**177672**	**ISK-M8**
			For M12 connections	**165592**	**ISK-M12**
Inscription labels					
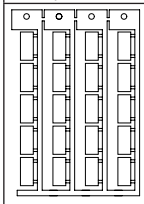	Inscription labels 8x20 mm, in frame (20 pieces)			**539388**	**IBS-8x20**
User documentation					
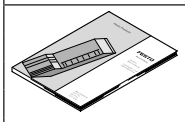	User documentation for input/output modules		German	**539299**	**P.BE.-CPEA-CL-DE**
			English	**539300**	**P.BE.-CPEA-CL-EN**
			French	**539302**	**P.BE.-CPEA-CL-FR**
			Italian	**539303**	**P.BE.-CPEA-CL-IT**
			Spanish	**539301**	**P.BE.-CPEA-CL-ES**

Datasheet – Output modules CP-A08

Function

The electrical outputs control actuators such as individual valves, lamps, signal equipment and much more.

Note

Optimum actuation of valves with M12 central plug.

Area of application

- Output module with 8 outputs 24 V DC
- M12 connection technology, 5-pin socket
- LED display of the switching status per channel
- Short circuit and overload detection
- Malfunction display by a green LED

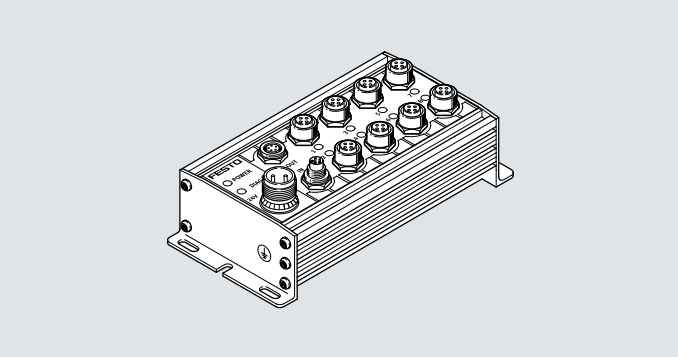

General technical data			
Type			CP-A08-M12-5POL Positive switching
Number of outputs			8
Allocation of outputs			Single allocation
Output connection type			8x M12, 5-pin
Load voltage connection			M18, 4-pin
Bus connection			2 plugs M9, 5-pin, via prefabricated cables
Max. output current per channel		[A]	0.5
Operating voltage		[V DC]	24 ±25%
Load voltage connection		[V DC]	24 ±25%, reverse polarity protected
Fuse protection for power output		[A]	Electronic fuse per output 0.5
Intrinsic current consumption of electronics		[mA]	Max. 90
Overload/short circuit protection			Per channel
Switching logic			PNP to IEC 1131-2
Degree of protection to EN 60529			IP65 (when fully plugged in or fitted with protective cover)
Temperature range	Operation	[°C]	–5 ... +50
	Storage	[°C]	–20 ... +70
Material			Die-cast aluminium
Dimensions (LxWxD)		[mm]	172.9 x 78 x 57.1
Weight		[g]	500

Certifications		
ATEX category for gas		II 3G
Type of ignition protection for gas		Ex na IIC T5 X Gc
ATEX category for dust		II 3D
Type of ignition protection for dust		Ex tc IIIC T80°C X Dc IP65
ATEX ambient temperature	[°C]	–5 ≤ Ta ≤ +50
CE marking (see declaration of conformity)		To EU EMC Directive[1)] To EU Explosion Protection Directive (ATEX)
KC mark		KC EMC
Certification		c UL us - Recognized (OL)

1) For information about the area of use, see the EC declaration of conformity at: www.festo.com/catalogue/... → Support/Downloads.
If the devices are subject to usage restrictions in residential, commercial or light-industrial environments, further measures for the reduction of the emitted interference may be necessary.

Datasheet – Output modules CP-A08

Connection and display components
CP-A08-M12...

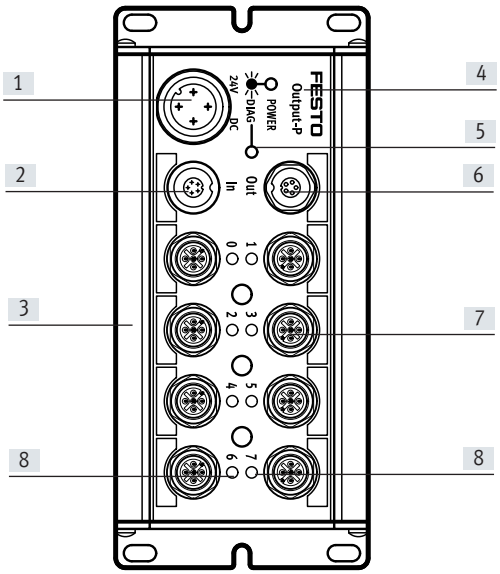

[1] Load voltage connection
[2] CP connection, incoming
[3] Slot for identification labels (IBS-6x10)
[4] Identification for output type:
– OUTPUT-P for PNP outputs
– OUTPUT-N for NPN outputs
[5] Status LED (green)
[6] CP connection, outgoing
[7] Connections for actuators
[8] Yellow LED for status display (one LED per input)

Pin allocation for load voltage connection CP-A08-M12...

Pin allocation	Pin	Signal	Designation
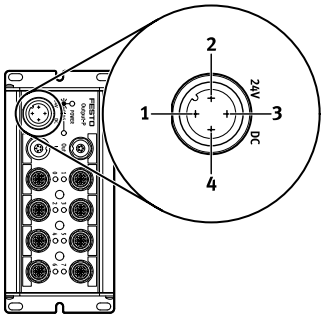	1	n.c.	Not connected
	2	24 V DC ±25%	Operating voltage
	3	0 V	Operating voltage 0 V
	4	FE	Protective earthing

Pin allocation for outputs

Pin allocation	Pin	Signal	Designation	Pin	Signal
CP-A08-M12-5POL (PNP outputs)					
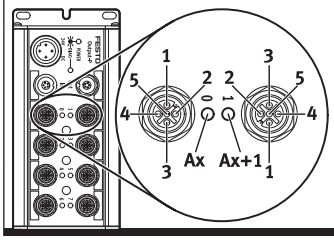	1	n.c.	Not connected	1	n.c.
	2	Ox+1	Connected with pin 4 of plug 2/not connected	2	n.c.
	3	0 V	Reference potential	3	0 V
	4	Ox	Output/connected with pin 2 of plug 1	4	Ox+1
	5	Ground	Earth terminal	5	Ground

Note
Two outputs can be connected to connections 0, 2, 4 and 6 of the CP output module via an internal connection between pin 2 of the even numbered output and pin 4 of the opposite odd numbered output.

* Ox = Output x

Accessories – Output modules CP-A08

Ordering data Designation				Part no.	Type
Output modules					
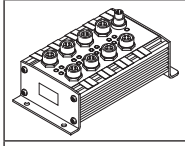	Positive switching			**175640**	**CP-A08-M12-5POL**
Power supply					
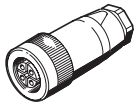	Power supply socket, straight, M18x1, 4-pin		For 1.5 mm²	**18493**	**NTSD-GD-9**
			For 2.5 mm²	**18526**	**NTSD-GD-13.5**
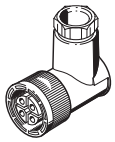	Power supply socket, angled, M18x1, 4-pin		For 1.5 mm²	**18527**	**NTSD-WD-9**
			For 2.5 mm²	**533119**	**NTSD-WD-11**
Sensor plug					
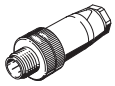	Plug, straight socket, M12x1	5-pin		**175487**	**SEA-M12-5GS-PG7**
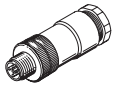	Plug for 2 connecting cables, M12x1, PG11	4-pin		**18779**	**SEA-GS-11-DUO**
		5-pin		**192010**	**SEA-5GS-11-DUO**
Distributors					
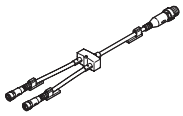	Modular system for all types of sensor/actuator distributor			**–**	**NEDY-...** → Internet: nedy
Connecting cable					
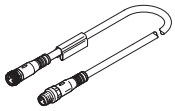	Modular system for a choice of connecting cables			**–**	**NEBU-...** → Internet: nebu
Mounting					
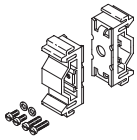	Mounting for H-rail			**170169**	**CP-TS-HS35**
User documentation					
	User documentation for input/output modules		German	**165125**	**P.BE.-CPEA-DE**
			English	**165225**	**P.BE.-CPEA-EN**
			French	**165127**	**P.BE.-CPEA-FR**
			Italian	**165157**	**P.BE.-CPEA-IT**
			Spanish	**165227**	**P.BE.-CPEA-ES**

Datasheet – Output modules CP-A08-EL

Function
The electrical outputs control actuators such as individual valves, lamps, signal equipment and much more.

Note
The output module is ideal for actuation of valves with M12 central plug.

Area of application
- Output module with 8 outputs 24 V DC
- M12, 5-pin connection technology
- Display of the switching status per channel via LED
- Short circuit and overload detection
- Malfunction display by a red LED
- Module supports the CPI functionality (only in combination with the CPX CP interface)
- Circumferential labelling with large, hinged inscription label
- Earthing plate and H-rail mounting already integrated

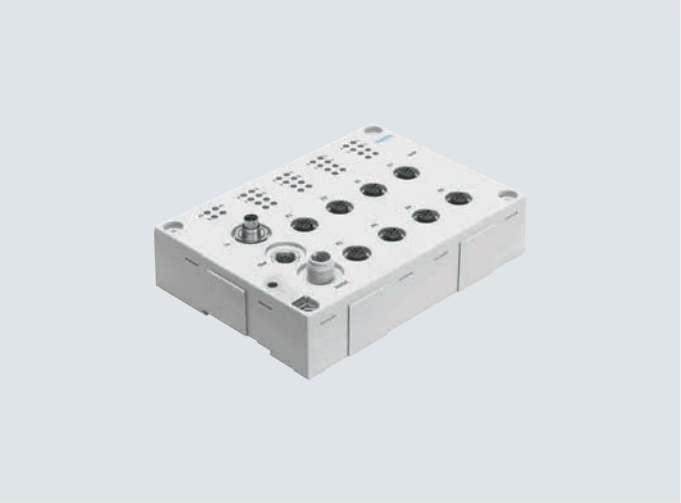

General technical data		
Type		CP-A08-M12-EL-Z Positive switching
Number of outputs		8
Allocation of outputs		Connection 1, 3, 5 and 7 with double allocation, connection 2, 4, 6 and 8 with single allocation
Sensor connection type		8x M12, 5-pin
Power supply 24 V DC		M12, 4-pin, A-coded
Intrinsic current consumption at operating voltage	[mA]	Typically 35
Max. aggregate current per module	[A]	4
Max. output current per channel	[A]	Max. 0.5, max. 2 outputs can be connected in parallel
Nominal operating voltage	[V DC]	24
Operating voltage range	[V DC]	18 ... 30
Residual ripple load voltage	[Vss]	4
Note concerning load voltage		Via load voltage connection (24 V DC)
Fuse protection (short circuit)		Internal electronic fuse protection for each group
Switching logic		PNP
Output characteristic		To ICE 1131-T2
Electrical isolation between channels		None
Connection to bus node		Via pre-assembled cables
Diagnostics		CP communication
		Short circuit/overload per channel
		Undervoltage
LED displays		3 module diagnostics
		8 channel status
		8 channel diagnostics

Materials	
Housing	Reinforced PA
Cover	Reinforced PA
Note on materials	RoHS-compliant
PWIS conformity	VDMA24364-B2-L

Datasheet – Output modules CP-A08-EL

Operating and environmental conditions		
Degree of protection to EN 60529		IP65/IP67 (when fully plugged in or fitted with protective cap)
Ambient temperature	[°C]	–5 ... +50
Storage temperature	[°C]	–20 ... +70
Corrosion resistance class CRC[1)]		1
CE marking (see declaration of conformity)		To EU EMC Directive[2)]
		To EU RoHS Directive[2)]
UKCA marking (see declaration of conformity)		To UK instructions for EMC[2)]
		To UK RoHS instructions[2)]
KC mark		KC EMC
Certification		c UL us listed (OL)
		RCM mark
		C-Tick

1) Corrosion resistance class CRC 1 to Festo standard FN 940070
Low corrosion stress. Dry indoor application or transport and storage protection. Also applies to parts behind coverings, in the non-visible interior area, or parts that are covered in the application (e.g. drive trunnions).

2) For information about the area of use, see the EC declaration of conformity at: www.festo.com/catalogue/... → Support/Downloads.
If the devices are subject to usage restrictions in residential, commercial or light-industrial environments, further measures for the reduction of the emitted interference may be necessary.

Datasheet – Output modules CP-A08-EL

Connection and display components
CP-A08-M12-EL-Z

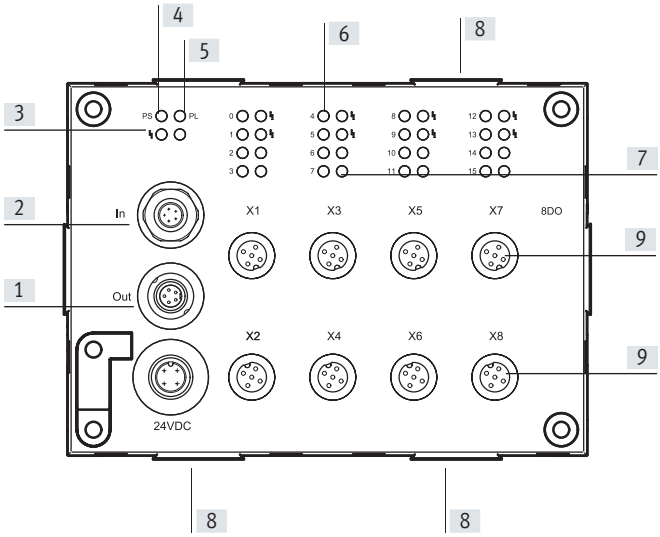

[1] CP connection, outgoing
[2] CP connection, incoming
[3] Status LED (module) for short circuit/overload of sensor supply (red)
[4] Status LED for CP communication (green)
[5] Status LED for load supply (PL, green)
[6] Status LEDs for outputs (status display, yellow)
[7] Status LED for output (channel) short circuit/overload (red)
[8] Fixture for inscription label holder ASCF-H-E2
[9] 8 outputs (1 output per socket)

Pin allocation for load voltage connection CP-A08-M12-EL-Z

Pin allocation

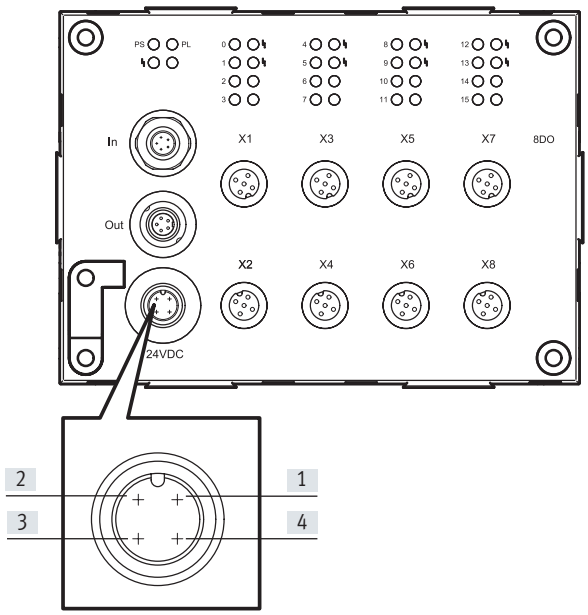

Pin	Signal	Designation
1	n.c.	Not connected
2	24 V DC ±25%	Operating voltage
3	0 V	Operating voltage 0 V
4	FE	Protective earthing

Datasheet – Output modules CP-A08-EL

Pin allocation for outputs

Pin allocation

CP-A08-M12-EL-Z (odd number of PNP outputs)

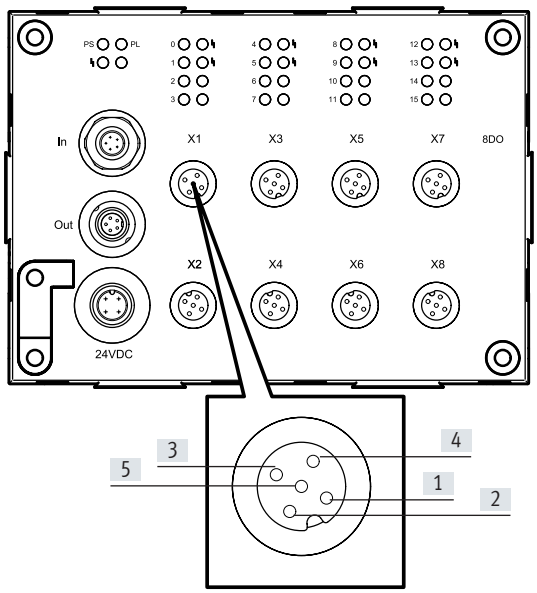

Output 1, 3, 5 and 7		Designation
Pin	Signal	
1	n.c.	Not connected
2	Ox+1	Connected with pin 4 of output 2
3	0 V	Reference potential
4	Ox	Output
5	FE	Earth terminal

Note

Two outputs can be connected to each of connections 1, 3, 5 and 7 of the CP output module via an internal connection between pin 2 of the odd numbered output and pin 4 of the underlying even numbered output.

* Ox = Output x

Pin allocation for outputs

Pin allocation

CP-A08-M12-EL-Z (even number of PNP outputs)

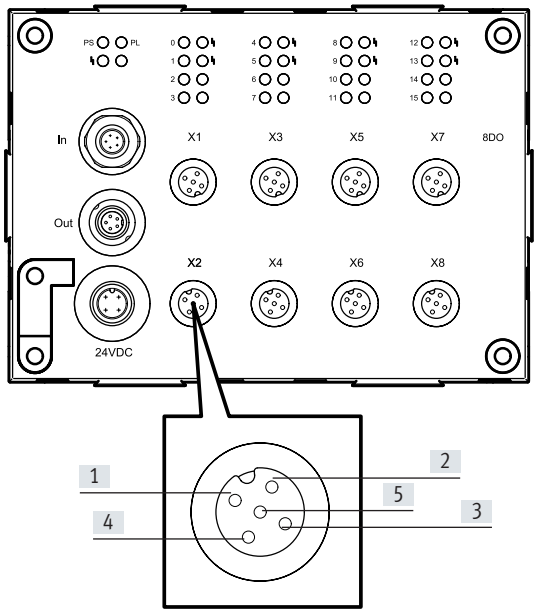

Output 2, 4, 6 and 8		Designation
Pin	Signal	
1	n.c.	Not connected
2	n.c.	Not connected
3	0 V	Reference potential
4	Ox+1	Connected with pin 2 of output 1
5	FE	Earth terminal

* Ox = Output x

Accessories – Output modules CP-A08-EL

Ordering data Designation				Part no.	Type
Output module					
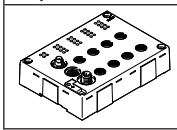	Positive switching			**546924**	**CP-A08-M12-EL-Z**
Plug					
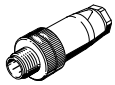	Plug, straight socket, M12x1	5-pin	PG7	**175487**	**SEA-M12-5GS-PG7**
		4-pin	PG7	**18666**	**SEA-GS-7**
		4-pin	2.5 mm^2 O.D.	**192008**	**SEA-4GS-7-2.5**
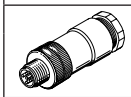	Plug for 2 connecting cables, M12x1, PG11	4-pin		**18779**	**SEA-GS-11-DUO**
		5-pin		**192010**	**SEA-5GS-11-DUO**
Distributors					
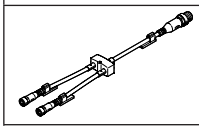	Modular system for all types of sensor/actuator distributor			**–**	**NEDY-...** ➔ Internet: nedy
Inscription label holders					
	Inscription label holders for EL modules, bag of 10			**547473**	**ASCF-H-E2**
User documentation					
	User documentation for input/output modules		German	**539299**	**P.BE.-CPEA-CL-DE**
			English	**539300**	**P.BE.-CPEA-CL-EN**
			French	**539302**	**P.BE.-CPEA-CL-FR**
			Italian	**539303**	**P.BE.-CPEA-CL-IT**
			Spanish	**539301**	**P.BE.-CPEA-CL-ES**

Datasheet – Output modules CP-A04

Function

The electrical outputs control actuators such as individual valves, lamps, signal equipment and much more.

Area of application

- Output module with 4 outputs 24 V DC
- M12 connection technology, with 5-pin sockets
- LED display of the switching status per channel
- Short circuit and overload detection
- Malfunction display by a red LED
- Module supports the CPI functionality (only in combination with the CPX CP interface)

Note

Optimum actuation of valves with M12 central plug.

General technical data		
Type		CP-A04-M12-CL Positive switching
Number of outputs		4
Allocation of outputs		Connection 1 and 3 with double allocation, connection 2 and 4 with single allocation
Sensor connection type		4x M12, 5-pin
Power supply 24 V DC		From the bus node, basic unit, CP interface, etc.
Intrinsic current consumption of electronics	[mA]	Typically 35
Max. output current per channel	[A]	Max. 0.5, max. 2 outputs can be connected in parallel
Operating voltage	[V DC]	24 ±25%
Fuse protection for power output		Internal electronic short-circuit protection per output
Switching logic		PNP
Output characteristic		To ICE 1131-2
Galvanic isolation		None
Connection to bus node		Via pre-assembled cables
Diagnostics		Undervoltage
		Short circuit at actuator output (per channel)
Dimensions (LxWxD)	[mm]	151 x 30 x 25
Weight	[g]	165

Datasheet – Output modules CP-A04

Operating and environmental conditions		
Degree of protection to EN 60529		IP65/IP67 (when fully plugged in or fitted with protective cap)
Ambient temperature	[°C]	–5 ... +50
Storage temperature	[°C]	–20 ... +70
Corrosion resistance class CRC[1)]		1
CE marking (see declaration of conformity)		To EU EMC Directive[2)]
		To EU RoHS Directive
		To EU Explosion Protection Directive (ATEX)
KC mark		KC EMC
Certification		c UL us listed (OL)
		RCM

1) Corrosion resistance class CRC 1 to Festo standard FN 940070
Low corrosion stress. Dry indoor application or transport and storage protection. Also applies to parts behind coverings, in the non-visible interior area, or parts that are covered in the application (e.g. drive trunnions).

2) For information about the area of use, see the EC declaration of conformity at: www.festo.com/catalogue/... ➔ Support/Downloads.
If the devices are subject to usage restrictions in residential, commercial or light-industrial environments, further measures for the reduction of the emitted interference may be necessary.

ATEX certifications		
ATEX category for gas		II 3G
Type of ignition protection for gas		Ex nA IIC T6 X Gc
ATEX category for dust		II 3D
Type of ignition protection for dust		Ex tc IIIC T70°C X Dc IP67
ATEX ambient temperature	[°C]	–5 ≤ Ta ≤ +50

Note

When operating device combinations in potentially explosive areas, the lowest common zone, temperature class and ambient temperature of the individual devices determine the possible use of the entire module.

Datasheet – Output modules CP-A04

Connection and display components

CP-A04-M12-CL

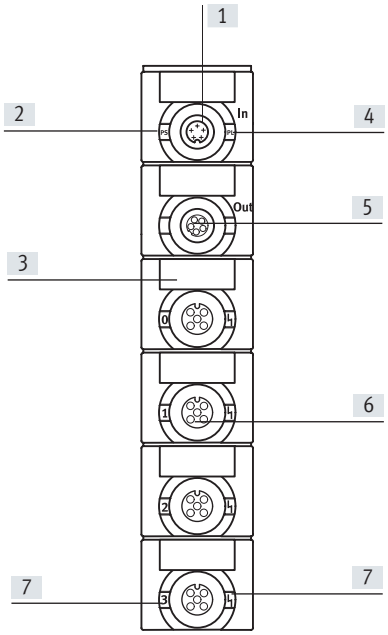

[1] CP connection, incoming
[2] Status LED (green)
[3] Holder for inscription label (IBS-8x20)
[4] Red LED for short circuit/overload display
[5] CP connection, outgoing
[6] Output
[7] Green LED for status indication (one LED per output)

Pin allocation for outputs

Pin allocation	Output 1 and 3		Designation	Output 2 and 4	
	Pin	Signal		Pin	Signal
CP-A08-M12-5POL (PNP outputs)					
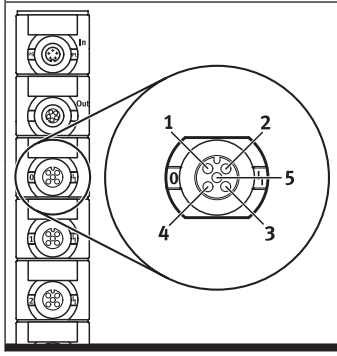	1	n.c.	Not connected	1	n.c.
	2	Ox+1	Connected with pin 4 of plug 2/not connected	2	n.c.
	3	0 V	Reference potential	3	0 V
	4	Ox	Output/connected with pin 2 of plug 1	4	Ox+1
	5	FE	Earth terminal	5	FE

Note

Two outputs can be connected to each of connections 1 and 3 of the CP output module via an internal connection between pin 2 of the odd numbered output and pin 4 of the underlying even numbered output.

* Ox = Output x

Accessories – Output modules CP-A04

Ordering data – Accessories

Designation				Part no.	Type
Output module					
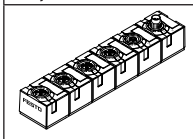	Positive switching			**538790**	**CP-A04-M12-CL**
Sensor plug					
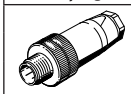	Plug, straight socket, M12x1	5-pin	PG7	**175487**	**SEA-M12-5GS-PG7**
		4-pin	PG7	**18666**	**SEA-GS-7**
		4-pin	2.5 mm² O.D.	**192008**	**SEA-4GS-7-2.5**
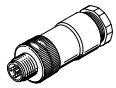	Plug for 2 connecting cables, M12x1, PG11	4-pin		**18779**	**SEA-GS-11-DUO**
		5-pin		**192010**	**SEA-5GS-11-DUO**
Distributors					
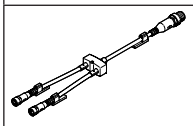	Modular system for all types of sensor/actuator distributor			**–**	**NEDY-...** → Internet: nedy
Connecting cable					
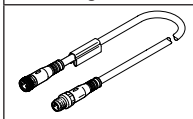	Modular system for a choice of connecting cables			**–**	**NEBU-...** → Internet: nebu
Protective caps					
	Cover cap for closing off unused connections (10 pieces)		For M12 connections	**165592**	**ISK-M12**
Inscription labels					
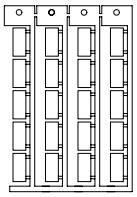	Inscription labels 8x20 mm, in frame (20 pieces)			**539388**	**IBS-8x20**
User documentation					
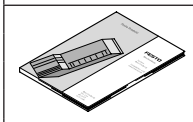	User documentation for input/output modules		German	**539299**	**P.BE.-CPEA-CL-DE**
			English	**539300**	**P.BE.-CPEA-CL-EN**
			French	**539302**	**P.BE.-CPEA-CL-FR**
			Italian	**539303**	**P.BE.-CPEA-CL-IT**
			Spanish	**539301**	**P.BE.-CPEA-CL-ES**

Datasheet – Valve terminals MPA-S

Flow rate
MPA1: up to 360 l/min
MPA14: up to 550 l/min
MPA2: up to 700 l/min

Valve width
MPA1: 10 mm
MPA14: 14 mm
MPA2: 21 mm

Voltage
24 V DC

CPI interface for communication between a valve terminal MPA-S and a CPI master. It activates a valve terminal MPA-S with up to 32 solenoid coils on max. 16 valve positions. It is also possible to install an additional electrical supply at any other point on the valve terminal to create different voltage zones.

Note

An additional electrical supply is essential for more than 16 MPA2 solenoid coils (more than 4 electronics modules).
Please note that without an additional electrical supply a maximum of 24 solenoid coils can be connected at the same time.
If more than 24 MPA1, 24 MPA14 or 12 MPA2 solenoid coils are to be connected at the same time, an additional supply must be connected at the latest after the third electronics module.

General technical data Type			**MPA-CPI-VI**
CP interface, incoming			Plug M9, 5-pin
CP interface, outgoing			M9 socket, 5-pin
Max. no. of valve positions			32
Max. number of pressure zones			9
LED display (product-specific)	PS		Common message regarding power supply
	PL		Power supply for valves
	Symbol		Module error
Nominal operating voltage		[V DC]	24
Operating voltage range		[V DC]	24 ±25%
Power failure buffering	Logic side only	[ms]	10
Current consumption at nominal operating voltage	Load	[mA]	Dependent on valve type and number of valves
	Electronics	[mA]	Approx. 50 (plus current consumption of electronics modules)
Residual ripple		[Vss]	4
Materials			Die-cast aluminium, PA
Note on materials			RoHS-compliant
Dimensions			➔ Internet: mpa-s
Weight		[g]	220
Technical data on valves			➔ Internet: mpa-s
Degree of protection to EN 60529			IP65 (when fully plugged in or fitted with protective cover)

Datasheet – Valve terminals MPA-S

Operating and environmental conditions		
Operating medium		Compressed air to ISO 8573-1:2010 [7:4:4]
Note on the operating/pilot medium		Lubricated operation possible (in which case lubricated operation will always be required)
Operating pressure	[bar]	−0.9 ... +10
Ambient temperature	[°C]	−5 ... +50
Temperature of medium	[°C]	−5 ... +50
Storage temperature	[°C]	−20 ... +40
Relative humidity		Max. 90% at 40°C
CE marking (see declaration of conformity)		To EU EMC Directive[1)]
		To EU Explosion Protection Directive (ATEX)
KC mark		KC EMC
Certification		c UL us - Recognized (OL)
		RCM

1) For information about the area of use, see the EC declaration of conformity at: www.festo.com/catalogue/... → Support/Downloads.
If the devices are subject to usage restrictions in residential, commercial or light-industrial environments, further measures for the reduction of the emitted interference may be necessary.

ATEX		
ATEX category for gas		II 3 G
Type of ignition protection for gas		Ex nA IIC T4 X Gc
Explosion-proof ambient temperature	[°C]	−5 ≤ Ta ≤ +50

Connection and display components

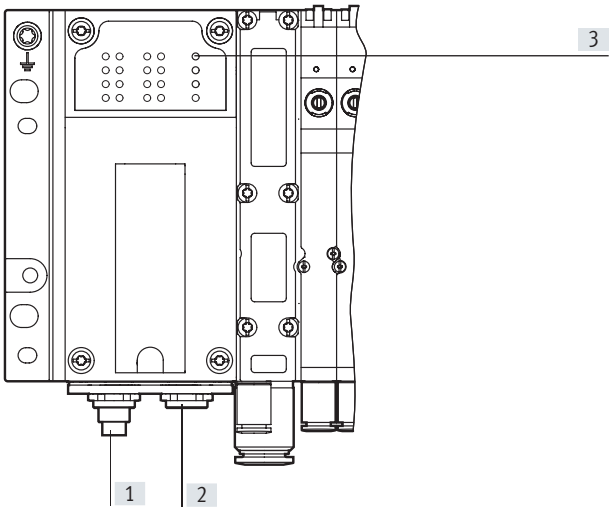

[1] CP connection, incoming
[2] CP connection, outgoing
[3] Status LEDs
CP system supply (green)
Load supply (green)
Module fault (red)

Ordering data

Designation			Part no.	Type
Valve terminal MPA-S				
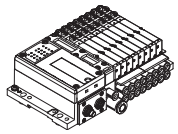	With CPI interface		**546280**	**MPA-CPI-VI**
Valve terminal connection				
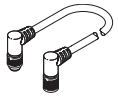	Connecting cable WS-WD	0.25 m	**540327**	**KVI-CP-3-WS-WD-0.25**
		0.5 m	**540328**	**KVI-CP-3-WS-WD-0.5**
		2 m	**540329**	**KVI-CP-3-WS-WD-2**
		5 m	**540330**	**KVI-CP-3-WS-WD-5**
		8 m	**540331**	**KVI-CP-3-WS-WD-8**
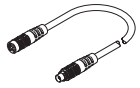	Connecting cable GS-GD	2 m	**540332**	**KVI-CP-3-GS-GD-2**
		5 m	**540333**	**KVI-CP-3-GS-GD-5**
		8 m	**540334**	**KVI-CP-3-GS-GD-8**

Datasheet – CPV-SC valve terminals

- Flow rate
  170 l/min
- Valve width
  10 mm
- Voltage
  24 V DC

CPI interface for communication between a CPV-SC valve terminal and a CPI master. It activates a valve terminal CPV-SC with up to 16 solenoid coils.

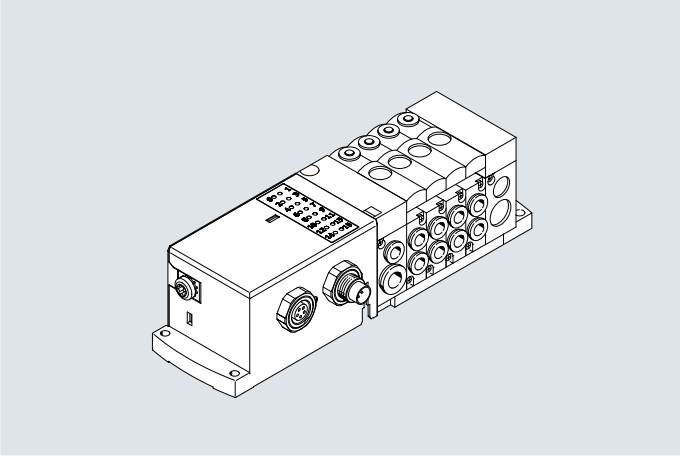

General technical data Type			**CPVSC1-AE16-CPI**
Types of communication			CP fieldbus
Log			CP fieldbus
Fieldbus interface			M9, 5-pin, plug and socket
Max. no. of solenoid coils			16
LED display (bus-specific)			CP: CP fieldbus
Device-specific diagnostics			Undervoltage of valve terminal
Parameterisation			Parameterisation via CP protocol
Reverse-polarity protection			For all electrical operating voltage connections
Current consumption at nominal operating voltage	Electronics	[mA]	≤100
	Load		Dependent on valve type and number of valves
Protection against direct and indirect contact			PELV
Housing material			Reinforced PA
Note on materials			RoHS-compliant
Type of mounting			Via through-hole
Width		[mm]	52
Height		[mm]	40
Length		[mm]	70
Product weight		[g]	150
Technical data on valves			→ Internet: cpv-sc
Degree of protection to EN 60529			IP20

Datasheet – CPV-SC valve terminals

Operating and environmental conditions		
Ambient temperature	[°C]	−5 ... +50
Storage temperature	[°C]	−20 ... +50
Relative humidity		90% at 50°C
		Non-condensing
Corrosion resistance class CRC[1)]		1
CE marking (see declaration of conformity)		To EU EMC Directive[2)]
Certification		c UL us - Recognized (OL)

1) Corrosion resistance class CRC 1 to Festo standard FN 940070
Low corrosion stress. Dry indoor application or transport and storage protection. Also applies to parts behind coverings, in the non-visible interior area, or parts that are covered in the application (e.g. drive trunnions).

2) For information about the area of use, see the EC declaration of conformity at: www.festo.com/catalogue/... ➔ Support/Downloads.
If the devices are subject to usage restrictions in residential, commercial or light-industrial environments, further measures for the reduction of the emitted interference may be necessary.

Connection and display components

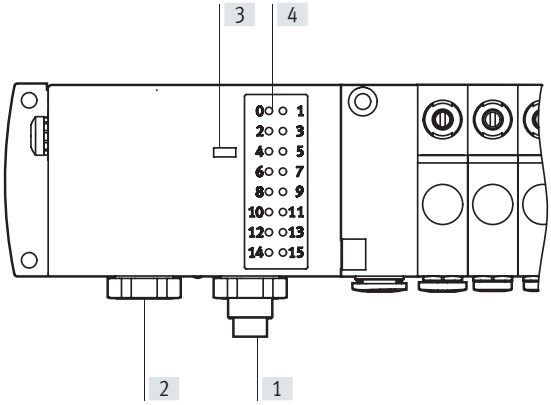

[1] CP connection, incoming
[2] CP connection, outgoing
[3] Status LED for CP communication
[4] Status LEDs for valves

Ordering data				
Designation			Part no.	Type
Valve terminal CPV-SC				
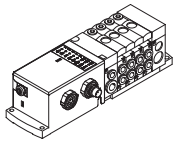	With CPI interface		**541975**	**CPVSC1-AE16-CPI**
Valve terminal connection				
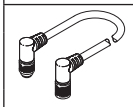	Connecting cable WS-WD	0.25 m	**540327**	**KVI-CP-3-WS-WD-0.25**
		0.5 m	**540328**	**KVI-CP-3-WS-WD-0.5**
		2 m	**540329**	**KVI-CP-3-WS-WD-2**
		5 m	**540330**	**KVI-CP-3-WS-WD-5**
		8 m	**540331**	**KVI-CP-3-WS-WD-8**
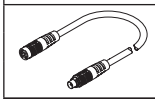	Connecting cable GS-GD	2 m	**540332**	**KVI-CP-3-GS-GD-2**
		5 m	**540333**	**KVI-CP-3-GS-GD-5**
		8 m	**540334**	**KVI-CP-3-GS-GD-8**

Datasheet – Bus node CTEU

- Flow rate
  Dependent on the connected valve terminal

- Valve width
  Dependent on the connected valve terminal

- Voltage
  24 V DC

CPI interface for communication between a valve terminal or input modules with I-Port interface and a CPI master.
Valve terminals with I-Port interface
- CPV
- MPA-L
- VTUG

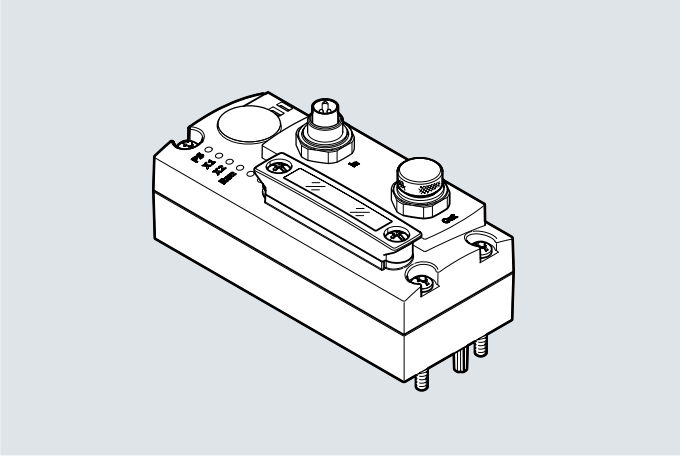

General technical data			
Type			**CTEU-CP**
Log			CPI-B
Diagnostics			Communication error
			System diagnostics
			Undervoltage
Parameterisation			Diagnostic behaviour
			Fail-safe response
Configuration support			None
Control elements			DIL switch
LED display	Product-specific		PS: Operating voltage for electronics and load supply
			X1: System status of module at I-Port 1
			X2: System status of module at I-Port 2
	Bus-specific		RUN: Communication OK
Maximum address capacity	Inputs	[byte]	4
	Outputs	[byte]	4
Type of mounting			On electrical interface
			On electrical connection block
Degree of protection			IP65
			IP67
Note on degree of protection			In assembled state
			Unused connections sealed
Dimensions W x L x H		[mm]	40 x 91 x 50
Grid dimension		[mm]	40
Product weight		[g]	105

Technical data **Fieldbus interface**		
Fieldbus interface		
Log		CPI-B
Function		Incoming bus connection
		Power supply
Transmission rate	[kbps]	1000
Type		CP installation system
Connection type		Plug
Connection technology		M9x0.5
Number of pins/wires		5
Internal cycle time		2 ms per 2 bytes of user data
Fieldbus interface 2		
Function		Bus connection outgoing
		Power supply
Connection type		Socket
Connection technology		M9x0.5
Number of pins/wires		5

Datasheet – Bus node CTEU

Technical data – Electrics		
Nominal operating voltage	[V DC]	24
Operating voltage range	[V DC]	18 ... 30
Intrinsic current consumption at nominal operating voltage	[mA]	Typically 50
Max. power supply	[A]	3.4
Power failure buffering	[ms]	10

Operating and environmental conditions		
Ambient temperature	[°C]	–5 ... +50
Storage temperature	[°C]	–20 ... +70
Corrosion resistance class CRC[1)]		2
CE marking (see declaration of conformity)		To EU EMC Directive[2)]
KC mark		KC EMC
Certification		c UL us - Recognized (OL)
		RCM

1) Corrosion resistance class CRC 2 to Festo standard FN 940070
Moderate corrosion stress. Indoor applications in which condensation can occur. External visible parts with primarily decorative surface requirements which are in direct contact with a normal industrial environment.
2) For information about the area of use, see the EC declaration of conformity at: www.festo.com/catalogue/... ➔ Support/Downloads.
If the devices are subject to usage restrictions in residential, commercial or light-industrial environments, further measures for the reduction of the emitted interference may be necessary.

Materials	
Housing	PA
Note on materials	RoHS-compliant
	Contains paint-wetting impairment substances

Connection and display components

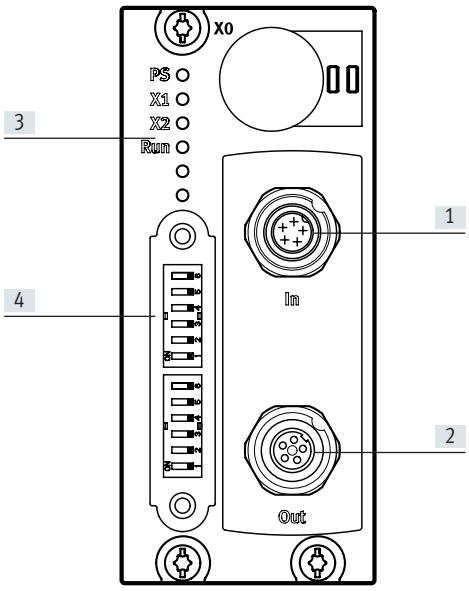

[1] CP connection, incoming
[2] CP connection, outgoing
[3] Status LED for CP communication
[4] DIL switch

Datasheet – Bus node CTEU

Ordering data Designation			Part no.	Type
Bus node				
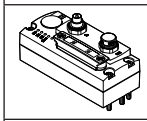	For valve terminals with I-Port interface		**2149714**	**CTEU-CP**
Valve terminal connection				
	Connecting cable WS-WD	0.25 m	**540327**	**KVI-CP-3-WS-WD-0.25**
		0.5 m	**540328**	**KVI-CP-3-WS-WD-0.5**
		2 m	**540329**	**KVI-CP-3-WS-WD-2**
		5 m	**540330**	**KVI-CP-3-WS-WD-5**
		8 m	**540331**	**KVI-CP-3-WS-WD-8**
	Connecting cable GS-GD	2 m	**540332**	**KVI-CP-3-GS-GD-2**
		5 m	**540333**	**KVI-CP-3-GS-GD-5**
		8 m	**540334**	**KVI-CP-3-GS-GD-8**

Technical data

Dimensions – Bus node Download CAD data ➔ www.festo.com

CPX-FB... and CPX-CP-4-FB

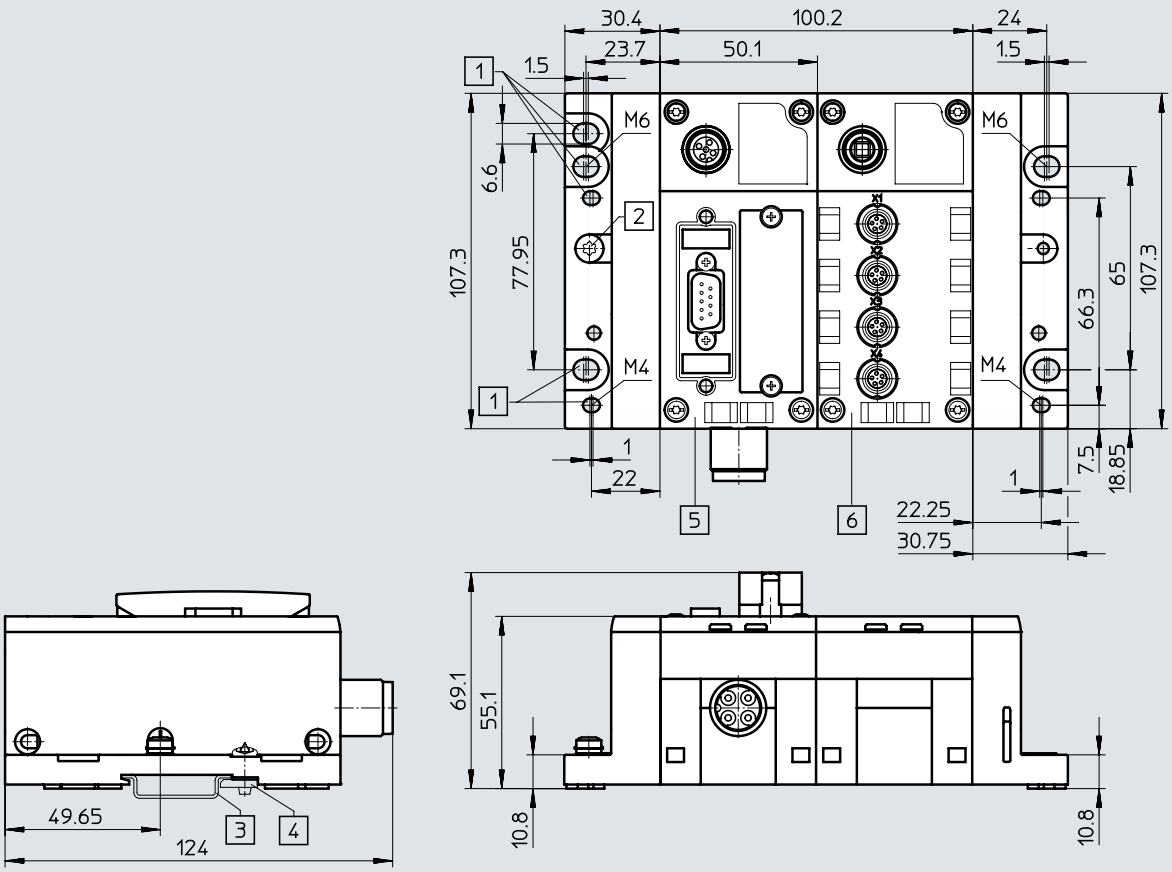

[1] Mounting holes
[2] Earthing screw
[3] H-rail
[4] H-rail mounting
[5] CPX bus node
[6] CPX-CP interface

Technical data

Dimensions – Sturdy input modules Download CAD data ➔ www.festo.com

CP-E16-M8

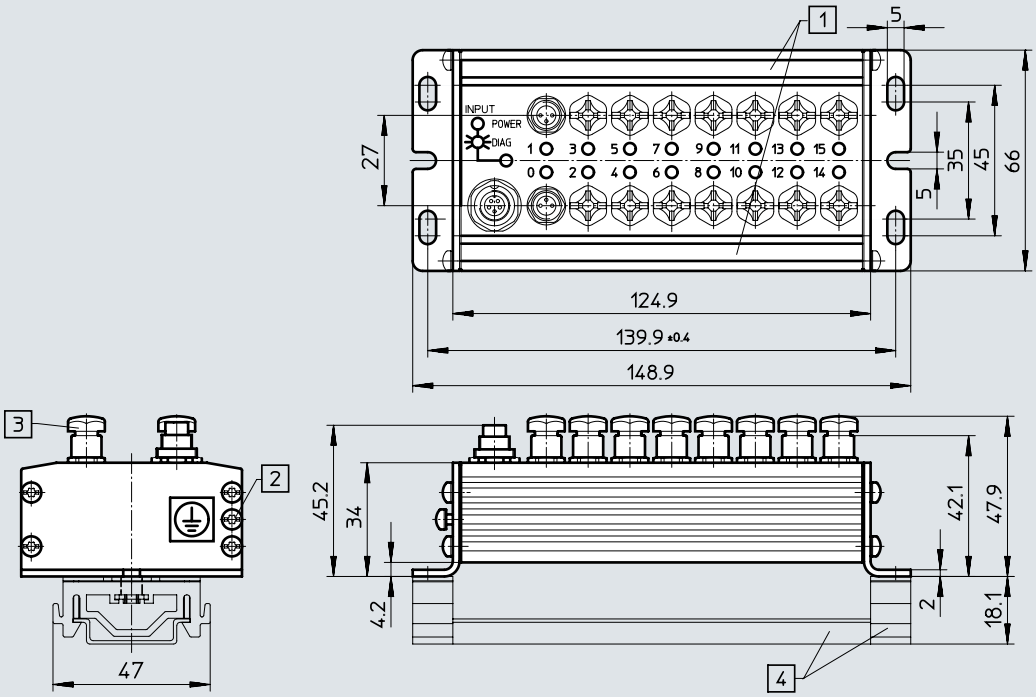

[1] Slots for inscription labels
[2] Earthing screw M3
[3] Protective caps (included in the scope of delivery)
[4] H-rail with support base

CP-E16-M8-Z

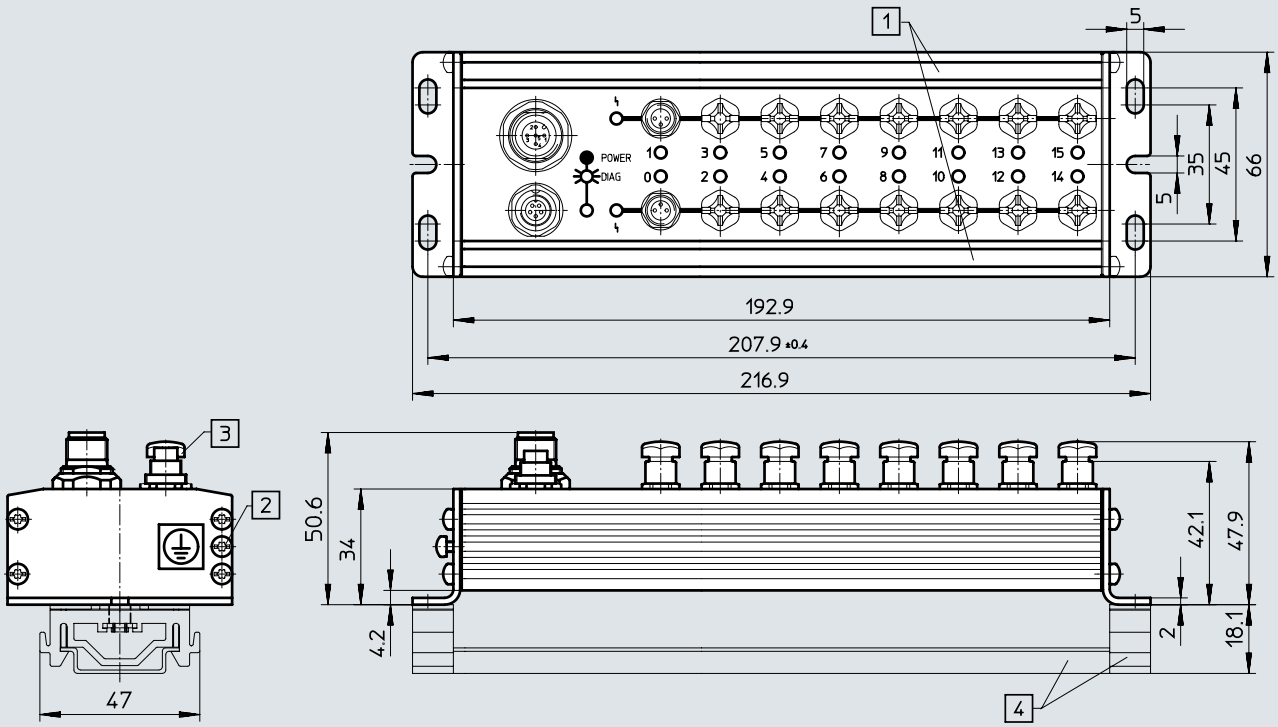

[1] Slots for inscription labels
[2] Earthing screw M3
[3] Protective caps (included in the scope of delivery)
[4] H-rail with support base

Technical data

Dimensions – Sturdy input modules Download CAD data ➔ www.festo.com

CP-E16-M12x2-5POL

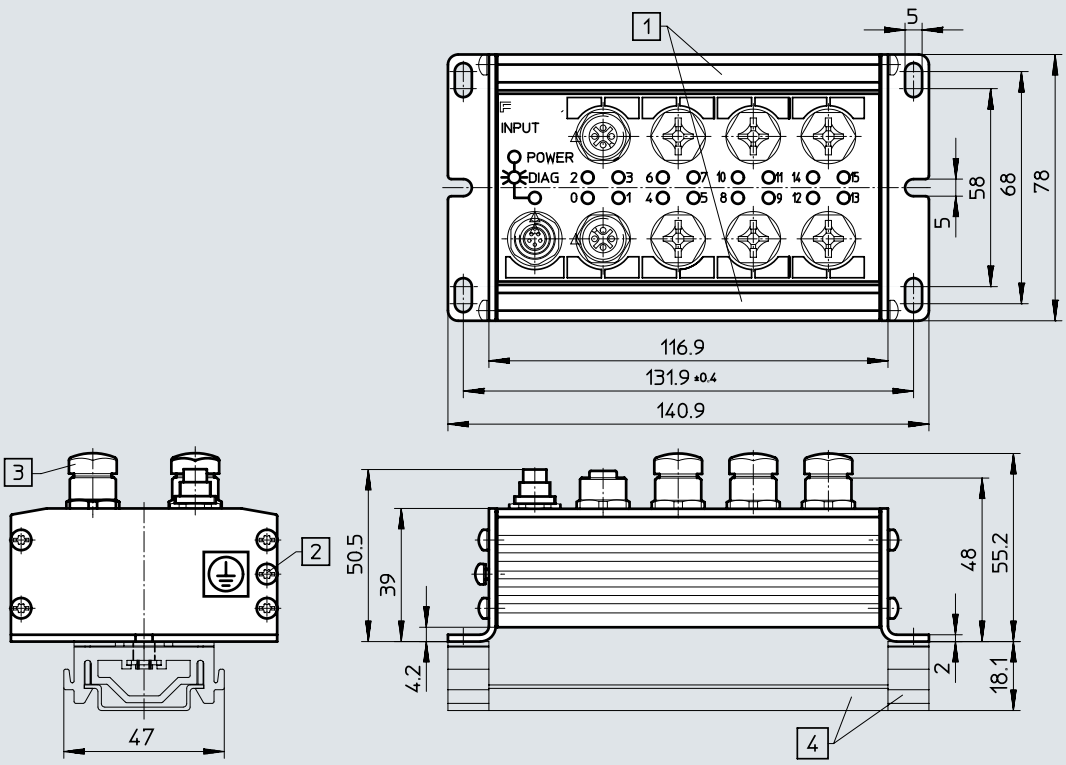

[1] Slots for inscription labels

[2] Earthing screw M3

[3] Protective caps (included in the scope of delivery)

[4] H-rail with support base

Technical data

Dimensions – Economical input modules Download CAD data ➔ www.festo.com

CP-E16-M8-EL

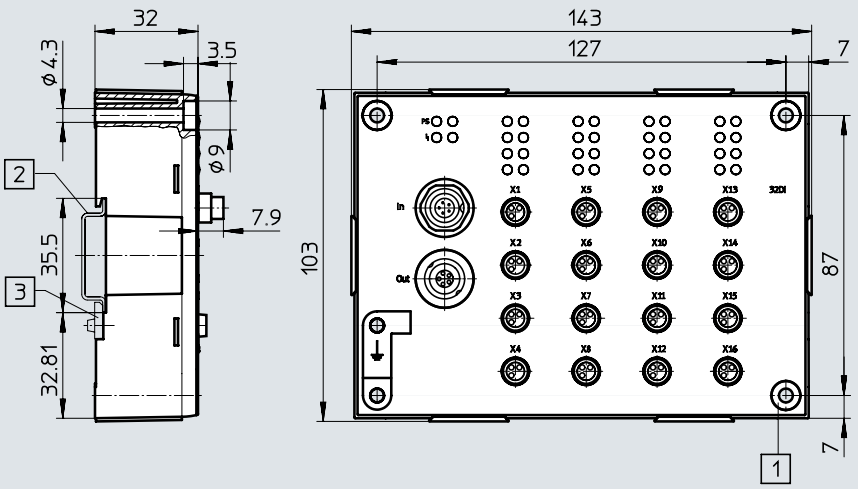

[1] Through-hole for surface mounting
[2] H-rail
[3] Mounting kit for H-rail (included in the scope of delivery)

CP-E16-M12-EL

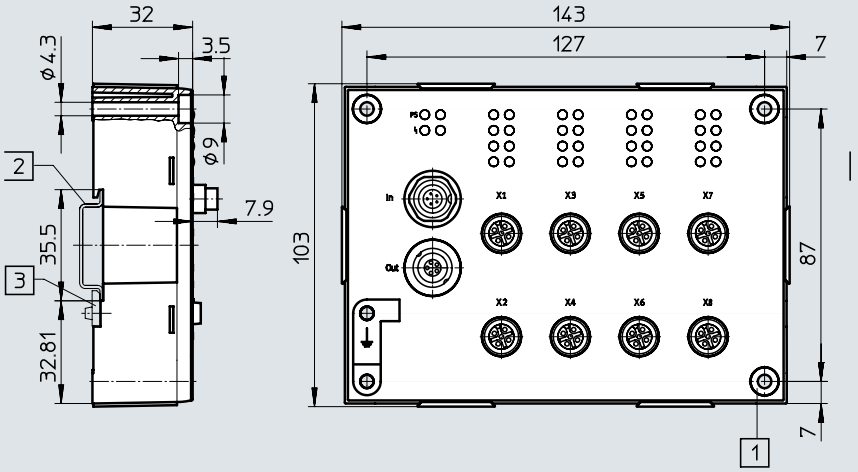

[1] Through-hole for surface mounting
[2] H-rail
[3] Mounting kit for H-rail (included in the scope of delivery)

Technical data

Dimensions – Economical input modules Download CAD data ➔ www.festo.com

CP-A08-M12-5POL

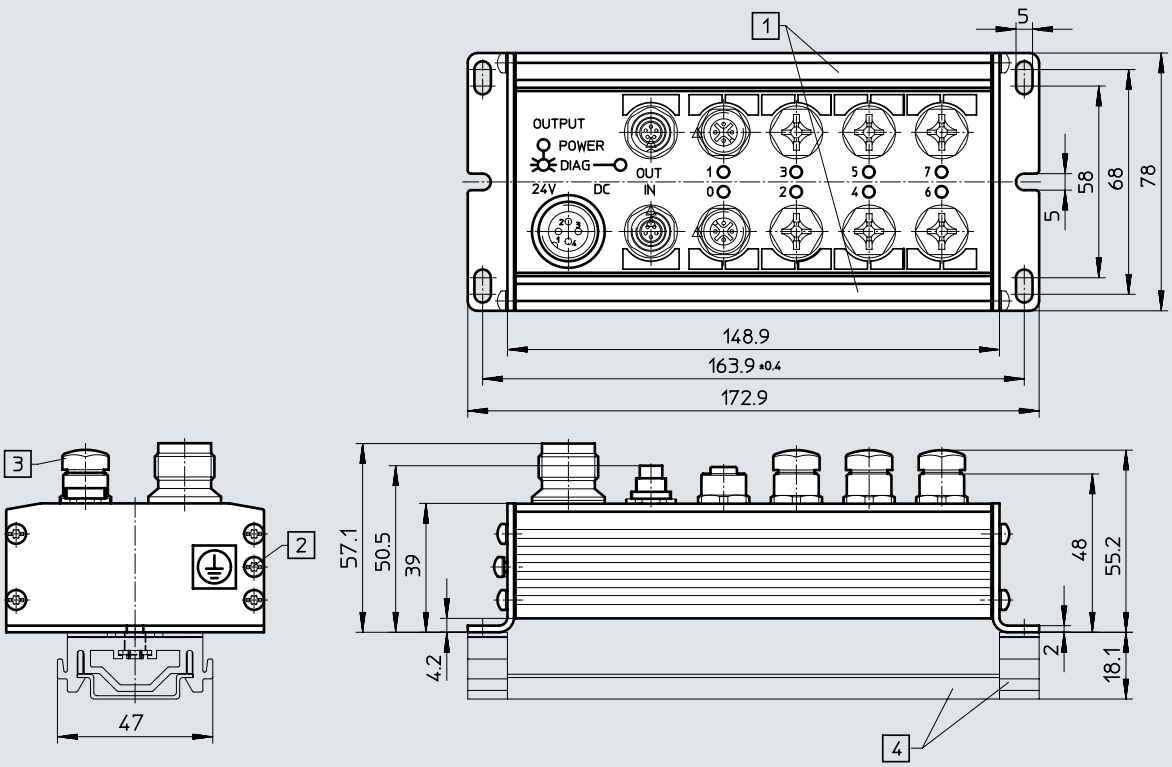

[1] Slots for inscription labels

[2] Earthing screw M3

[3] Protective caps (included in the scope of delivery)

[4] H-rail with support base

Dimensions – Economical output module Download CAD data ➔ www.festo.com

CP-A08-M12-EL-Z

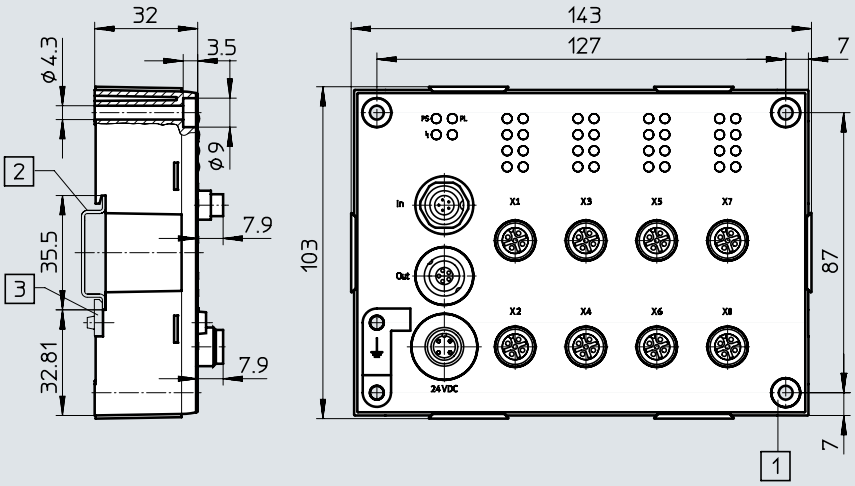

[1] Through-hole for surface mounting

[2] H-rail

[3] Mounting kit for H-rail (included in the scope of delivery)

Technical data

Dimensions – Compact CP modules Download CAD data ➔ www.festo.com

CP-E08-M12-CL/CP-A04-M12-CL

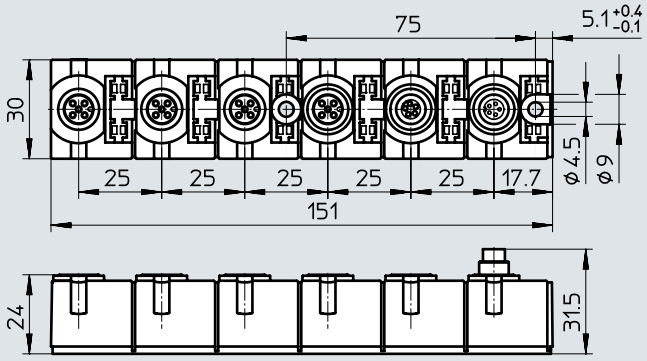

CP-E08-M8-CL

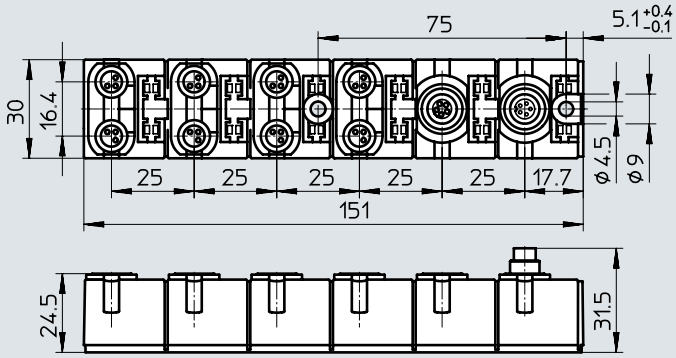

CP-E16-KL-CL

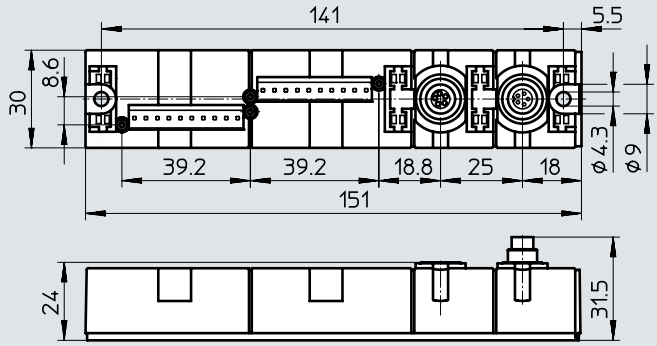

Order processing information

Configuration guidelines

The CPI system supports a certain number of modules per CP string depending on the type of the CP master and the CP modules connected.

CP masters and CP modules can be split into two different groups:

- With CPI functionality
- Without CPI functionality.

CP modules with CPI functionality

CP modules with CPI functionality offer the following features:

- Incoming and outgoing CP interface
- Any arrangement of the modules within a CP string
- Max. 4 modules per CP string
- Max. 32 inputs and 32 outputs can be connected to each string depending on the version

CP modules without CPI functionality

Sturdy CP modules offer the following features:

- CP valve terminals and CP output modules have an incoming and outgoing CP interface
- CP input modules only have an incoming CP interface and therefore can only be positioned at the end of a CP string
- All CP modules with CPI functionality can also be connected to CP masters without extended functionality.

Information on using CP modules with and without CPI functionality

A mixture of CP modules with and without CPI functionality is possible. The following must be noted in this case:

- Only one input module without CPI functionality is possible per CP string (at the end of a CP string)
- Only one CP valve terminal or output module without CPI functionality is possible per CP string (any point in the CP string)
- Free positions in the CP string can be filled by CP modules with CPI functionality (max. 4 modules).

Note

The cable length for any given string may not exceed 10 m.

Connecting cables are available with lengths of 0.25 m, 0.5 m, 2 m, 5 m and 8 m
➔ p. 69

No more than 32 inputs and 32 outputs (sum of all 4 CP modules on a CP string) may be connected, regardless of the type of CP module (with or without CPI functionality).

Order processing

The electrical CPI installation system can be ordered as follows:

- Digitally using the valve terminal configurator.

Please note that the CP strings must be allocated in ascending numerical order, i.e. starting with string 1, followed by string 2, etc. without omitting any numbers.

To correctly allocate a CP string, proceed as follows:

- First select a connecting cable of appropriate length.
- Then select an input/output module.
- Follow these steps until the string is fully allocated (max. 4 strings for CP modules with extended functionality).

The valve terminals are configured separately:

- Valve terminal CPV CPV10/14/18-VI-FB-....
- ➔ Internet: cpv
- Valve terminals MPA-S MPA-S-CPI-VI
- ➔ Internet: mpa-s

The configuration of the valve terminals with I-Port interface is carried out separately in two stages:

- Selection of the CPI interface
- ➔ Internet: cteu
- Selection of the valve terminal:
- ➔ Internet: vtoc
- ➔ Internet: vtub-12
- ➔ Internet: cpv
- ➔ Internet: mpal
- ➔ Internet: vtug

Accessories

Ordering data Designation					Part no.	Type
Connection sets for power supply and sensors						
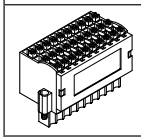	Plug, screw-in tension-spring socket		3-row, 30-pin	With LED	**197162**	**PS1-SAC31-30POL+LED**
Sensor plug						
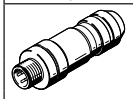	Plug M8, 3-pin	Solderable	For NEDY-L2R1-V1-M8G3-N-M8G4		**18696**	**SEA-GS-M8**
		Screw-in	For NEDY-L2R1-V1-M8G3-N-M8G4		**192009**	**SEA-3GS-M8-S**
	Plug M12, 4-pin	Screw terminal	For cable ⌀ 2.5 ... 2.9 mm		**192008**	**SEA-4GS-7-2.5**
			For 2x cable ⌀ 3 ... 5 mm		**18779**	**SEA-GS-11-DUO**
			For cable ⌀ 4 ... 6 mm		**18666**	**SEA-GS-7**
	Plug, M12, 5-pin	Screw terminal	For 2x cable ⌀ 2.5 ... 5 mm		**192010**	**SEA-5GS-11-DUO**
			For cable ⌀ 4 ... 6 mm		**175487**	**SEA-M12-5GS-PG7**
Distributors						
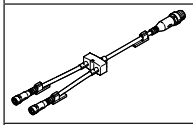	Modular system for all types of sensor/actuator distributor				–	**NEDY-...** ➔ Internet: nedy
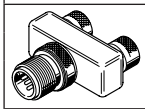	Push-in T-connector	1x plug M8, 4-pin	2x socket M8, 3-pin		**8005312**	**NEDY-L2R1-V1-M8G3-N-M8G4**
		1x plug M12, 4-pin	2x socket M8, 3-pin		**8005311**	**NEDY-L2R1-V1-M8G3-N-M12G4**
			2x socket M12, 5-pin		**8005310**	**NEDY-L2R1-V1-M12G5-N-M12G4**
Connecting cable						
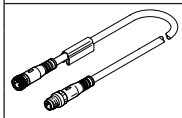	Connecting cable M8-M8	3-pin	Straight plug/straight socket	0.5 m	**541346**	**NEBU-M8G3-K-0.5-M8G3**
				1.0 m	**541347**	**NEBU-M8G3-K-1-M8G3**
				2.5 m	**541348**	**NEBU-M8G3-K-2.5-M8G3**
				5.0 m	**541349**	**NEBU-M8G3-K-5-M8G3**
	Connecting cable M12-M12	5-pin	Straight plug/straight socket	1.5 m	**529044**	**KV-M12-M12-1.5**
				3.5 m	**530901**	**KV-M12-M12-3.5**
	Modular system for a choice of connecting cables				–	**NEBU-...** ➔ Internet: nebu
Connecting cable – CP modules						
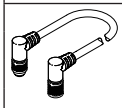	Angled plug/angled socket			0.25 m	**540327**	**KVI-CP-3-WS-WD-0.25**
				0.5 m	**540328**	**KVI-CP-3-WS-WD-0.5**
				2 m	**540329**	**KVI-CP-3-WS-WD-2**
				5 m	**540330**	**KVI-CP-3-WS-WD-5**
				8 m	**540331**	**KVI-CP-3-WS-WD-8**
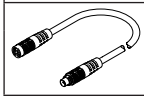	Straight plug/straight socket			2 m	**540332**	**KVI-CP-3-GS-GD-2**
				5 m	**540333**	**KVI-CP-3-GS-GD-5**
				8 m	**540334**	**KVI-CP-3-GS-GD-8**
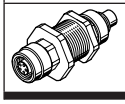	Connecting plug for CP cable (cabinet through-feed)				**543252**	**KVI-CP-3-SSD**

Accessories

Ordering data Designation			Part no.	Type
Protective caps				
	Cover cap for closing off unused connections (10 pieces)	For M8 connections	**177672**	**ISK-M8**
		For M12 connections	**165592**	**ISK-M12**
Mounting components				
	Mounting for H-rail, CP modules		**170169**	**CP-TS-HS35**
Inscription labels				
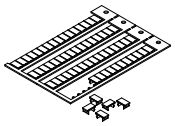	Inscription labels 6x10 mm, in frame (64 pieces)		**18576**	**IBS-6x10**
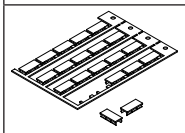	Inscription labels 8x20 mm in frames (20 pieces) for compact modules (CP-...-CL)		**539388**	**IBS-8x20**
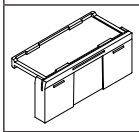	Inscription label holders for EL modules, bag of 10		**547473**	**ASCF-H-E2**
Documentation				
	User documentation for CPX-CP interface	German	**539293**	**P.BE-CPX-CP-EN**
		English	**539294**	**P.BE-CPX-CP-EN**
		Spanish	**539295**	**P.BE-CPX-CP-ES**
		French	**539296**	**P.BE-CPX-CP-FR**
		Italian	**539297**	**P.BE-CPX-CP-IT**
	User documentation for sturdy input/output modules	German	**165125**	**P.BE.-CPEA-DE**
		English	**165225**	**P.BE.-CPEA-EN**
		French	**165127**	**P.BE.-CPEA-FR**
		Italian	**165157**	**P.BE.-CPEA-IT**
		Spanish	**165227**	**P.BE.-CPEA-ES**
	User documentation for compact input/output modules	German	**539299**	**P.BE.-CPEA-CL-DE**
		English	**539300**	**P.BE.-CPEA-CL-EN**
		French	**539302**	**P.BE.-CPEA-CL-FR**
		Italian	**539303**	**P.BE.-CPEA-CL-IT**
		Spanish	**539301**	**P.BE.-CPEA-CL-ES**
	System description	German	**165126**	**P.BE-CPSYS-DE**
		English	**165226**	**P.BE-CPSYS-EN**
		French	**165128**	**P.BE-CPSYS-FR**
		Italian	**165158**	**P.BE-CPSYS-IT**
		Spanish	**165228**	**P.BE-CPSYS-ES**

Festo - Your Partner in Automation

1 Festo Inc.

5300 Explorer Drive
Mississauga, ON L4W 5G4
Canada

Festo Customer Interaction Center
Tel: 1 877 463 3786
Fax: 1 877 393 3786
Email: customer.service.ca@festo.com

2 Festo Pneumatic

Av. Ceylán 3,
Col. Tequesquináhuac
54020 Tlalnepantla,
Estado de México

Multinational Contact Center
01 800 337 8669

ventas.mexico@festo.com

3 Festo Corporation

1377 Motor Parkway
Suite 310
Islandia, NY 11749

4 Regional Service Center

7777 Columbia Road
Mason, OH 45040

Festo Customer Interaction Center
1 800 993 3786
1 800 963 3786
customer.service.us@festo.com

Connect with us

www.festo.com/socialmedia

www.festo.com

Subject to change