Linear drives DGPI/DGPIL, with integrated displacement encoder

FESTO

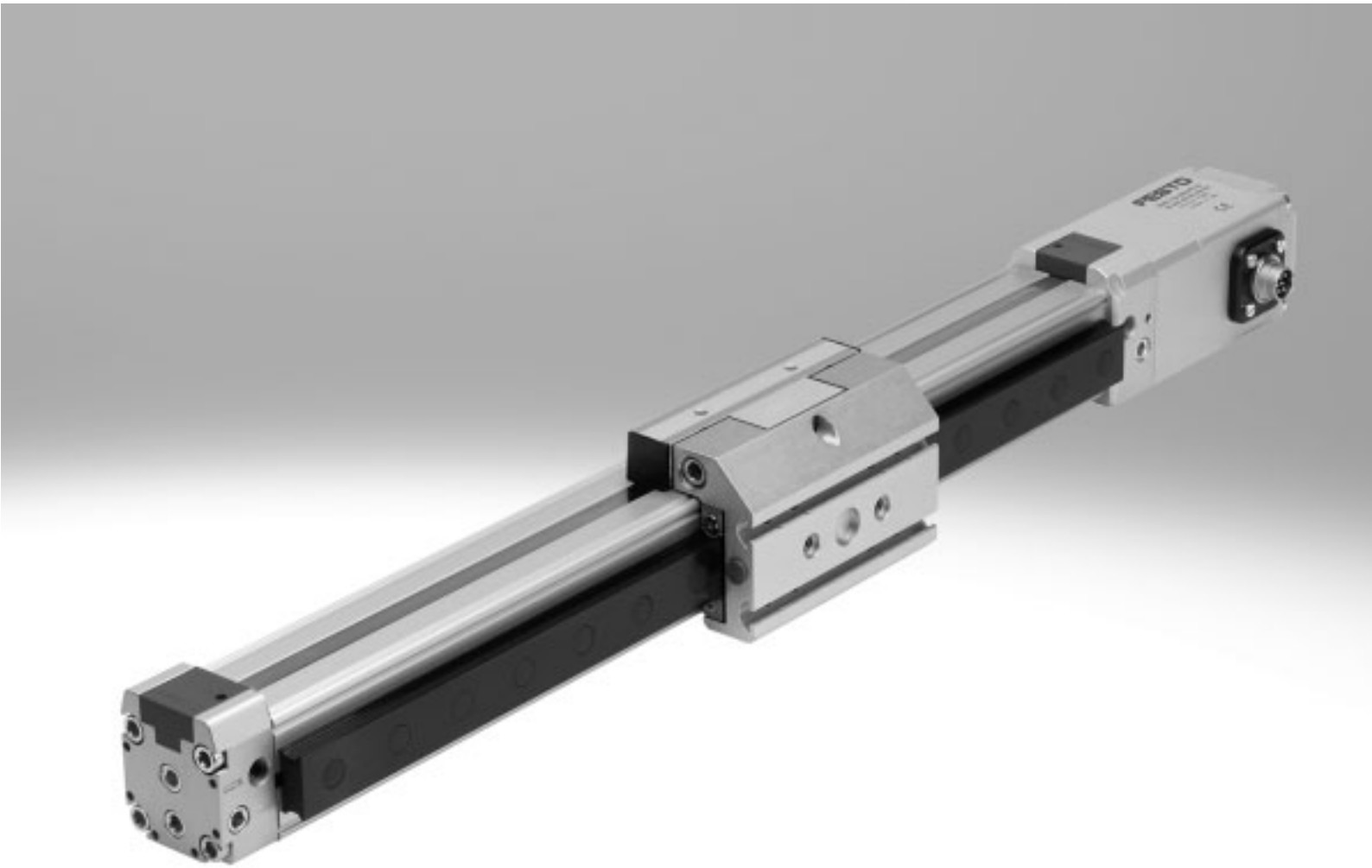

Cylinders with displacement encoder

Product range overview

Function	Type	Description
Drives	**Rodless**	
	DDLI 	• Without guide • With contactless measuring displacement encoder • Based on linear drive DGC-K • Supply ports on end face • System product for handling and assembly technology
	DGCI 	• With guide • With contactless measuring displacement encoder • Based on linear drive DGC • Supply ports optionally on end face or front • System product for handling and assembly technology
	DGPI/DGPIL 	**Do not use for new projects!** • With or without guide • With contactless measuring displacement encoder, integrated • Wide range of options for mounting on drives • System product for handling and assembly technology
	With piston rod	
	DNCI 	• With contactless measuring displacement encoder • Various piston rod variants • Standards-based cylinder to ISO 15552 ISO DIN VDMA
	DDPC 	• With contactless measuring displacement encoder • Various piston rod variants • Standards-based cylinder to ISO 15552 ISO DIN VDMA
	DNC/DSBC 	• With attached potentiometer MLO-LWG • Various piston rod variants • Standards-based cylinder to ISO 15552 ISO DIN VDMA
Swivel modules	**Swivel modules**	
	DSMI 	• Based on swivel modules DSM • Integrated rotary potentiometer • Compact design • Wide range of mounting options

Cylinders with displacement encoder

Product range overview

Piston ∅	Stroke/swivel angle [mm/°]	Suitable for positioning with CPX-CMAX	for end-position controller CPX-CMPX	for end-position controller SPC11	for use as a measuring cylinder
Rodless					
25, 32, 40	100, 160, 225, 300, 360, 450, 500, 600, 750, 850, 1000, 1250, 1500, 1750, 2000	■	■	■	■
18, 25, 32, 40, 63	100, 160, 225, 300, 360, 450, 500, 600, 750, 850, 1000, 1250, 1500, 1750, 2000	■	■	■	■
40, 50, 63	225, 300, 360, 450, 500, 600, 750, 1000, 1250, 1500, 1750, 2000	■	■	■	■
With piston rod					
32, 40, 50, 63	10 … 2000	–	–	–	■
	100 … 750	■	■	■	–
80, 100	10 … 2000	–	–	–	■
	100 … 750	■	■	■	–
32, 40, 50, 63, 80	100, 150, 225, 300, 360, 450, 600, 750	■	■	■	■
Swivel modules					
25, 40, 63	270	■	■	■	■

Cylinders with displacement encoder

Features

Servopneumatic drive technology

Positioning and Soft Stop applications as an integral component of the valve terminal CPX – the modular peripheral system for decentralised automation tasks.
The modular design means that valves, digital inputs and outputs, positioning modules and end-position controllers, as appropriate to the application, can be combined in almost any way on the CPX terminal.

Advantages:
- Pneumatics and electrics – control and positioning on one platform
- Innovative positioning technology – piston rod drives, rodless drives, rotary drives
- Actuation via fieldbus
- Remote maintenance, remote diagnostics, web server, SMS and e-mail alerts are all possible via TCP/IP
- Modules can be quickly exchanged and expanded without altering the wiring

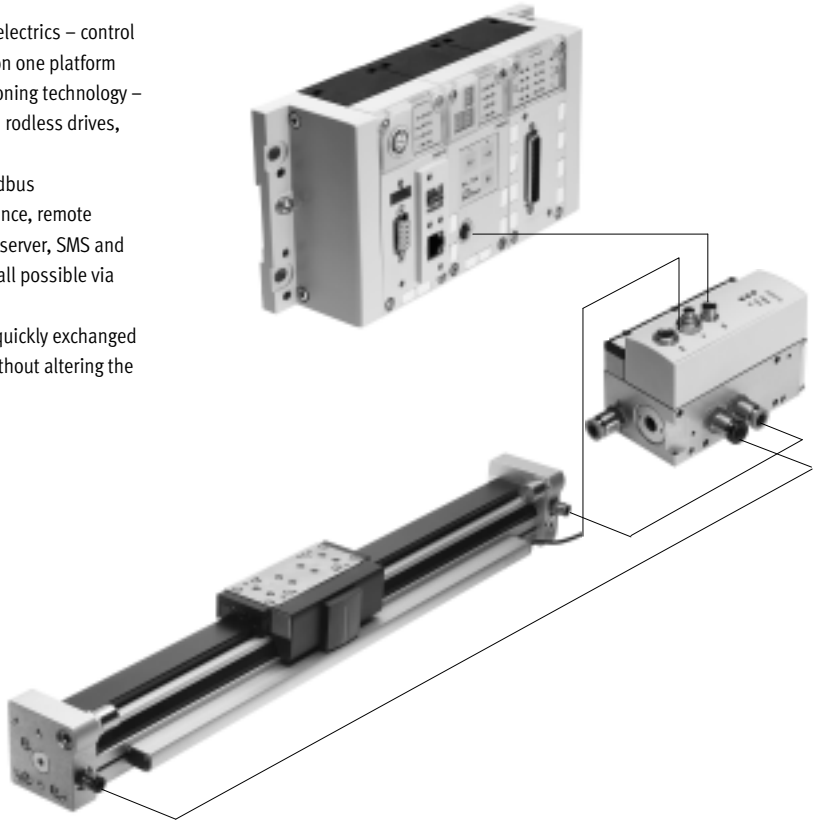

Axis controller CPX-CMAX

Technical data ➔ Internet: cpx-cmax

Free choice:
Position and force control, directly actuated or selected from one of 64 configurable position sets.
If you are looking for something more: the configurable function for switching to the next set enables simple functional sequences to be realised with the axis controller CPX-CMAX.
All stations are recognised as: the auto-identification function identifies each participant with its device data on the controller CPX-CMAX.

Also included:
The functional scope of the controller CPX-CMAX includes actuation of a brake or clamping unit via the proportional directional control valve VPWP.
Up to 8 modules (max. 8 axes) can be operated in parallel and independently of each other.
Commissioning via FCT (Festo configuration software) or via fieldbus: no programming, only configuration.

Advantages:
- Greater flexibility
- OEM friendly – commissioning also via fieldbus
- Easy installation and fast commissioning
- Cost-effective
- You program the system in your PLC environment

Cylinders with displacement encoder

Features

End-position controller CPX-CMPX

Technical data ➔ Internet: cpx-cmpx

Fast travel between the mechanical end stops of the cylinder, stopping gently and without impact in the end position.
Fast commissioning via control panel, fieldbus or handheld unit.
Improved control of downtime.
Actuation of a brake or clamping unit via the proportional directional control valve VPWP is an integral part of the controller CMPX.

Depending on the fieldbus chosen, up to 9 end-position controllers can be actuated on the CPX terminal.
All system data can be read and written via the fieldbus, including, for example, the mid positions.

Advantages:
- Greater flexibility
- OEM friendly – commissioning also via fieldbus
- Easy installation and fast commissioning
- Cost-effective
  - up to 30% faster cycle rates
  - significantly reduced system vibration
- Improved work ergonomics thanks to significantly reduced noise level
- The extended diagnostics help to reduce the service time of the machine

Proportional directional control valve VPWP

Technical data ➔ Internet: vpwp

The 5/3-way proportional directional control valve for applications with Soft Stop and pneumatic positioning.
Fully digitalised – with integrated pressure sensors, with new diagnostic functions.
In sizes 4, 6, 8 and 10.
Flow rate of 350, 700, 1400 and 2000 l/min.

With switching output for actuating a brake.
Coloured supply ports.
Pre-assembled cables guarantee faultless and fast connection with the controllers CPX-CMPX and CPX-CMAX.

Advantages:
- Easy installation and fast commissioning
- Reduction of system downtimes thanks to the new diagnostic options
- With switching output for actuating a brake/clamping unit

Measuring module CPX-CMIX

Technical data ➔ Internet: cpx-cmix

Fully digital data acquisition and transmission means that pneumatic cylinders can be used as sensors.
With very high repetition accuracy and incorporating both analogue and digital measuring sensors.

Suitable for the linear drive DGCI with displacement encoder for measuring absolute values, for the piston rod drive DNCI/DDPC with incremental displacement encoder or even for a potentiometer of the type MLO.

Advantages:
- All process steps can be documented, which improves quality
- An adjustable contact force (via pressure regulator) increases the precision of the "displacement sensor"
- With displacement encoders for measuring absolute values, the actual position is immediately available after the system is switched on

Cylinders with displacement encoder

Drive options

System with linear drive DDLI, DGCI

Technical data ➔ Internet: ddli or dgci

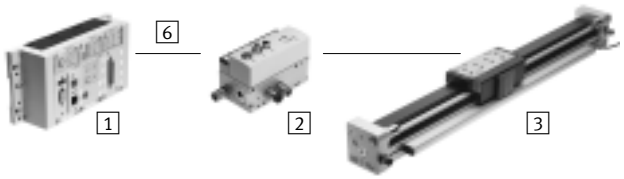

1 Controller module CPX-CMPX or CPX-CMAX
2 Proportional directional control valve VPWP
3 Linear drive DDLI, DGCI with displacement encoder
6 Connecting cable KVI-CP-3-...

- Pneumatic rodless linear drive with displacement encoder, with or without recirculating ball bearing guide
- Displacement encoder with absolute and contactless measurement
- Diameters:
  - DGCI: 18 ... 63 mm
  - DDLI: 25 ... 40 mm
- Stroke: 100 ... 2000 mm in fixed lengths
- Range of applications: Soft Stop and pneumatic positioning
- Loads from 1 ... 180 kg
- No sensor interface required

Advantages:
- Complete drive unit
- DDLI for easy connection to customer's guide system
- Excellent running characteristics
- For fast and accurate positioning down to ±0.2 mm (only with axis controller CPX-CMAX)

System with linear drive DGPI, DGPIL or displacement encoder MME-MTS

Technical data ➔ Internet: dgpi

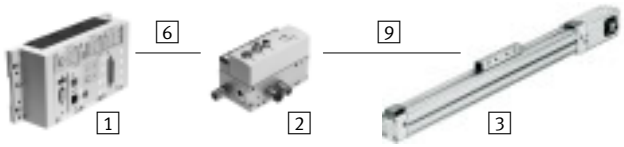

1 Controller module CPX-CMPX or CPX-CMAX
2 Proportional directional control valve VPWP
3 Linear drive DGPI, DGPIL with displacement encoder
6 Connecting cable KVI-CP-3-...
9 NEBP-M16W6-K-2-M9W5

- Pneumatic rodless linear drive with displacement encoder, with or without recirculating ball bearing guide
- Displacement encoder with absolute and contactless measurement
- Diameter: 25 ... 63 mm
- Stroke: 225 ... 2000 mm in fixed lengths
- Range of applications: Soft Stop and pneumatic positioning
- Loads from 2 ... 180 kg
- No sensor interface required

Advantages:
- Complete drive unit
- DGPI for easy connection to customer's guide system
- Excellent running characteristics
- For fast and accurate positioning down to ±0.2 mm (only with axis controller CPX-CMAX)

System with standard cylinder DNCI, DDPC

Technical data ➔ Internet: dnci

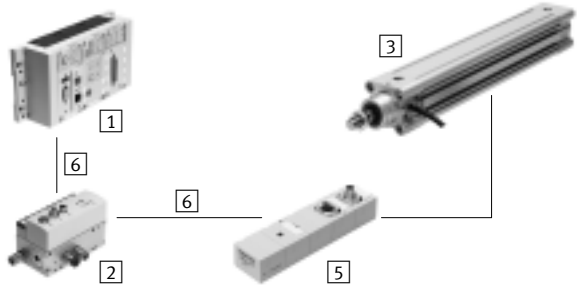

1 Controller module CPX-CMPX or CPX-CMAX
2 Proportional directional control valve VPWP
3 Standard cylinder DNCI, DDPC with displacement encoder
5 Sensor interface CASM-S-D3-R7
6 Connecting cable KVI-CP-3-...

- Standard cylinder with integrated displacement encoder, conforms to DIN ISO 6432, VDMA 24 562, NF E 49 003.1 and Uni 10 290
- Displacement encoder with contactless and incremental measuring
- Diameter: 32 ... 100 mm
- Stroke: 100 ... 750 mm
- Range of applications: Soft Stop and pneumatic positioning
- Loads from 3 ... 450 kg and a matching sensor interface CASM-S-D3-R7
- Pre-assembled cables guarantee faultless and fast electrical connection

Advantages:
- Compact drive unit
- Can be used universally
- Also with guide unit
- For fast and accurate positioning up to ±0.5 mm (only with axis controller CPX-CMAX)

Cylinders with displacement encoder

Drive options

System with swivel module DSMI

Technical data ➔ Internet: dsmi

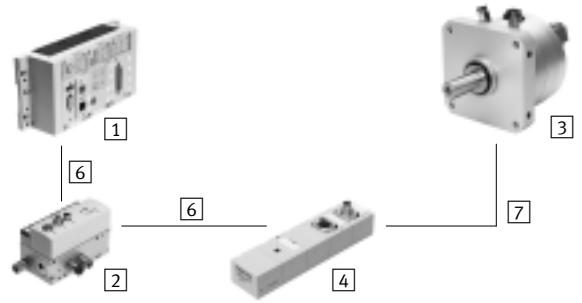

1 Controller module CPX-CMPX or CPX-CMAX
2 Proportional directional control valve VPWP
3 Swivel module DSMI with displacement encoder
4 Sensor interface CASM-S-D2-R3
6 Connecting cable KVI-CP-3-...
7 Connecting cable NEBC-P1W4-K-0,3-N-M12G5

- Swivel module DSMI with integrated displacement encoder
- Identical design to pneumatic swivel module DSM
- Absolute displacement encoder based on a potentiometer
- Swivel range of 0 ... 270°
- Size: 25, 40, 63
- Max. torque: 5 ... 40 Nm
- Range of applications: Soft Stop and pneumatic positioning
- Mass moments of inertia from 15 ... 6000 kgcm^2 and a matching sensor interface CASM-S-D2-R3
- Pre-assembled cables guarantee faultless and fast connection with the proportional directional control valve VPWP

Advantages:

- Complete drive unit, compact, can be used immediately
- High angular acceleration
- With adjustable fixed stops
- For fast and accurate positioning down to ±0.2° (only with axis controller CPX-CMAX)

System with potentiometer

Technical data ➔ Internet: casm

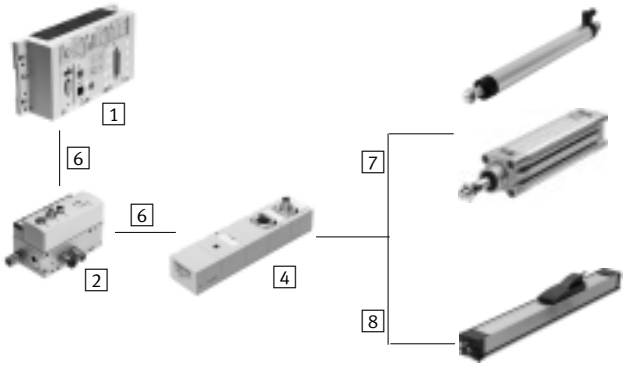

1 Controller module CPX-CMPX or CPX-CMAX
2 Proportional directional control valve VPWP
4 Sensor interface CASM-S-D2-R3
6 Connecting cable KVI-CP-3-...
7 Connecting cable NEBC-P1W4-K-0,3-N-M12G5
8 Connecting cable NEBC-A1W3-K-0,4-N-M12G5

- Attachable potentiometers with absolute measurement, with high degree of protection
- With connecting rod or moment compensator
- Measuring range: 100 ... 2000 mm
- Pre-assembled cables guarantee faultless and fast connection with the sensor interface CASM
- Range of applications: Soft Stop and pneumatic positioning with cylinder ∅ 25 ... 80 mm, e.g. DNC or DSBC
- Loads from 1 ... 300 kg

Advantages:

- Easy installation and fast commissioning
- Cost-effective
- Can also be used in harsh ambient conditions
- Variety of drives: CPX-CMPX and CPX-CMAX also support cylinders with external displacement encoder

Cylinders with displacement encoder

Drive options

System components for Soft Stop systems with end-position controller CPX-CMPX	Linear drive		Standard cylinder	Swivel module	Displacement encoder		➔ Page/ Internet
	DDLI/DGCI	DGPI	DNCI, DDPC	DSMI	MLO-LWG/-TLF	MME-MTS	
End-position controller CPX-CMPX	■	■	■	■	■	■	cmpx
Prop. directional control valve VPWP	■	■	■	■	■	■	vpwp
Sensor interface CASM-S-D2-R3	–	–	–	■	■	–	casm
Sensor interface CASM-S-D3-R7	–	–	■	–	–	–	casm
Connecting cable KVI-CP-3-...	■	■	■	■	■	■	kvi
Connecting cable NEBC-P1W4-...	–	–	–	■	■ / –	–	nebc
Connecting cable NEBC-A1W3-...	–	–	–	–	– / ■	–	nebc
Connecting cable NEBP-M16W6-...	–	■	–	–	–	■	nebp

System components for pneumatic positioning systems with axis controller CPX-CMAX	Linear drive		Standard cylinder	Swivel module	Displacement encoder		➔ Page/ Internet
	DDLI/DGCI	DGPI	DNCI, DDPC	DSMI	MLO-LWG/-TLF	MME-MTS	
Axis controller CPX-CMAX	■	■	■	■	■	■	cmax
Prop. directional control valve VPWP	■	■	■	■	■	■	vpwp
Sensor interface CASM-S-D2-R3	–	–	–	■	■	–	casm
Sensor interface CASM-S-D3-R7	–	–	■	–	–	–	casm
Connecting cable KVI-CP-3-...	■	■	■	■	■	■	kvi
Connecting cable NEBC-P1W4-...	–	–	–	■	■ / –	–	nebc
Connecting cable NEBC-A1W3-...	–	–	–	–	– / ■	–	nebc
Connecting cable NEBP-M16W6-...	–	■	–	–	–	■	nebp

System components for measuring cylinders with measuring module CPX-CMIX	Linear drive		Standard cylinder	Swivel module	Displacement encoder		➔ Page/ Internet
	DDLI/DGCI	DGPI	DNCI, DDPC	DSMI	MLO-LWG/-TLF	MME-MTS	
Measuring module CPX-CMIX-M1-1	■	■	■	■	■	■	cmix
Sensor interface CASM-S-D2-R3	–	–	–	■	■	–	casm
Sensor interface CASM-S-D3-R7	–	–	■	–	–	–	casm
Connecting cable KVI-CP-3-...	(■)[1]	(■)[1]	■	■	■	(■)	kvi
Connecting cable NEBC-P1W4-...	–	–	–	■	■ / –	–	nebc
Connecting cable NEBC-A1W3-...	–	–	–	–	– / ■	–	nebc
Connecting cable NEBP-M16W6-...	–	■	–	–	–	■	nebp

1) As an extension

Cylinders with displacement encoder

Overview

Individual components for positioning
With end-position controller SPC11
➔ Internet: spc11

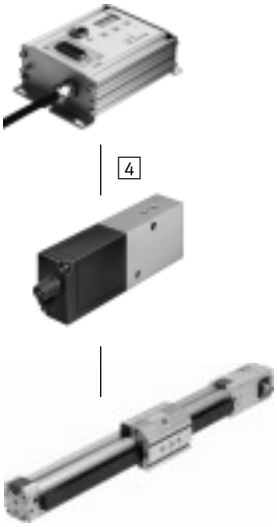

1 End-position controller SPC11-MTS-AIF
2 Proportional directional control valve MPYE
3 Linear drive DGPI, DGPIL
4 Connecting cable KMPYE-AIF-...

DGPI, without guide **10**

- Piston ∅ 40 ... 63 mm
- Stroke 225 ... 2000 mm
- Standard moment compensator
- Low characteristic load values
- Supply ports on both sides

DGPIL, with recirculating ball bearing guide **22**

- Piston ∅ 40 ... 63 mm
- Stroke 225 ... 2000 mm
- Standard slide
- High characteristic load values
- Supply ports on both sides

Linear drives DGPI, with integrated displacement encoder

Peripherals overview

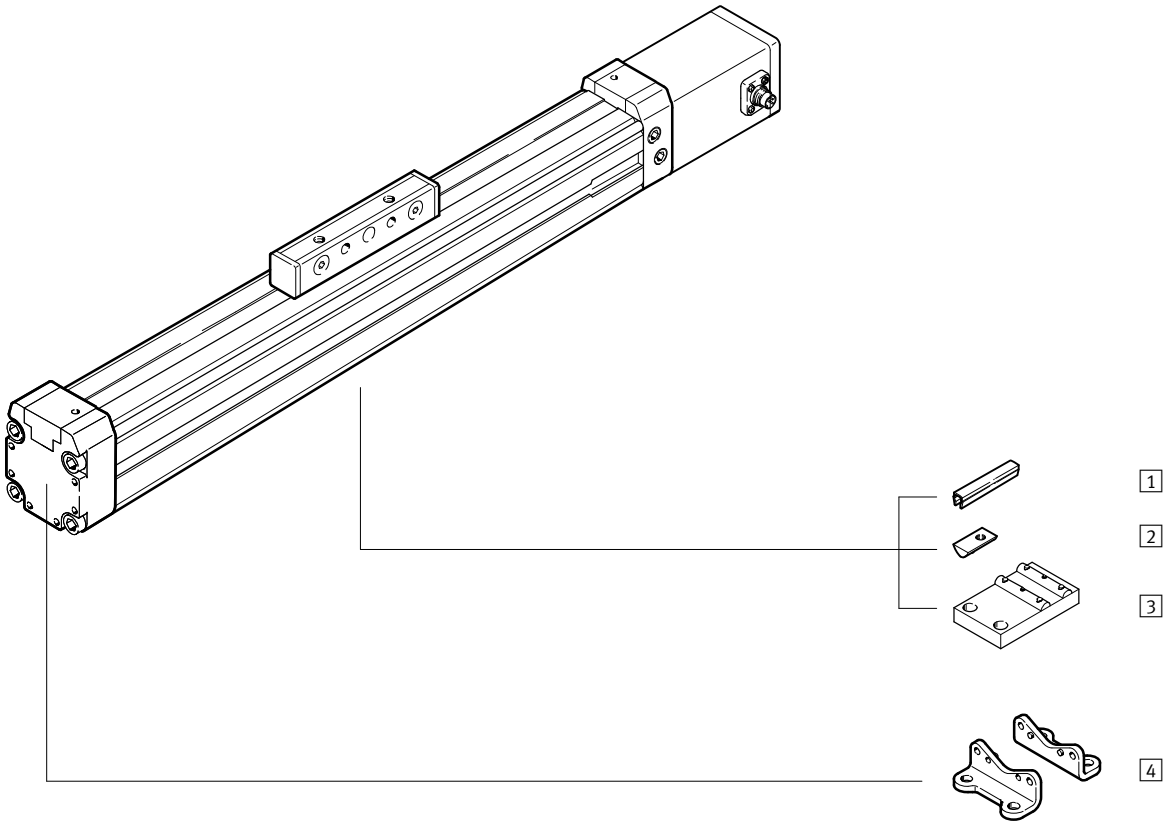

Variants and accessories			
	Type	Description	➔ Page/Internet
1	Slot cover ABP/ABP-S	For protecting against the ingress of dirt	39
2	Slot nut NST	For mounting attachments	39
3	Central support MUP	For mounting the axis	36
4	Foot mounting HP	For mounting the axis	36
	Adapters	For drive/drive combinations	42
		For drive/gripper combinations	gripper

Linear drives DGPI, with integrated displacement encoder

Type codes

DGPI	–	40	–	500	–	PPV	–	AIF	–	GK	–	AV	–	D2	–	4BYF

Type	
DGPI	Linear drive

Piston ∅ [mm]

Stroke [mm]

Cushioning	
PPV	Adjustable at both ends

Displacement encoder	
AIF	CAN axis interface

Basic design	
GK	Standard slide

Connection position for displacement encoder and compressed air	
AH	Connections at rear
AU	Connections underneath
AV	Connections at front

Supply port	
D2	Supply port at both ends

Accessories enclosed separately	
...S	Slot cover for sensor slot
...B	Slot cover for mounting slot
...Y	Slot nut for mounting slot
...M	Central support
...F	Foot mounting

Type discontinued
Available up until 2014

Linear drives DGPI, with integrated displacement encoder

Technical data

Function

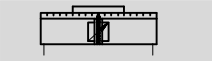

Diameter
25 … 63 mm

Stroke length
225 … 2000 mm

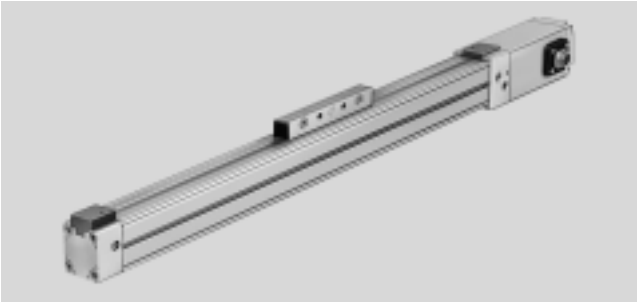

General technical data			
Piston ∅	40	50	63
Design	Piston		
	Moment compensator		
	Profile barrel		
Mode of operation	Double-acting		
Operating medium[1]	Compressed air according to ISO 8573-1:2010 [6:4:4]		
Note about the operating/pilot medium	Lubricated operation not possible Pressure dew point 10 °C below ambient temperature/temperature of medium		
Cushioning	Adjustable at both ends		
Cushioning length [mm]	30		
Position sensing	Integrated displacement encoder		
Measuring principle	Digital, magnetostrictive, non-contacting and absolute measurement		
Type of mounting	Foot mounting		
Stroke[2] [mm]	225; 300; 360; 450; 500; 600; 750; 1000; 1250; 1500; 1750; 2000		
Pneumatic connection	G¼		G⅜
Electrical connection	6-pin round plug to DIN 45322		

1) The proportional directional control valve MPYE used requires the characteristic values.
2) Supply of compressed air to each end of the cylinder (feature D2) is absolutely essential for Soft Stop SPC11 as of a length of 500 mm.

Forces [N] and impact energy [Nm]			
Piston ∅	40	50	63
Theoretical force at 6 bar	754	1178	1870
Max. impact energy in the end positions[1]	0.4	0.8	0.8

1) Cushioning PPV must be completely open for applications with Soft Stop SPC11.

Permissible impact velocity:

$$v_{perm.} = \sqrt{\frac{2 \times E_{perm.}}{m_{dead} + m_{load}}}$$

Maximum permissible load:

$$m_{load} = \frac{2 \times E_{perm.}}{v^2} - m_{dead}$$

$v_{perm.}$ Permissible impact velocity
$E_{perm.}$ Maximum impact energy
m_{dead} Moving mass (drive)
m_{load} Moving effective load

Note

These specifications represent the maximum values that can be achieved. Note the maximum permissible impact energy.

Linear drives DGPI, with integrated displacement encoder

Technical data

Positioning characteristics with end-position controller SPC11				
Piston ∅		40	50	63
Repetition accuracy of a mid-position[1]	[mm]	±2		
Mounting position		Any		
Minimum load, horizontal[2]	[kg]	5	8	12
Maximum load, horizontal[2]	[kg]	75	120	180
Minimum load, vertical[2]	[kg]	5	8	12
Maximum load, vertical[2]	[kg]	25	40	60
Travel time	[s]	➔ SoftStop sizing software: ➔ www.festo.com		
Recommended proportional directional control valve		➔ 40		

1) In the stroke range from 225 … 2000 mm
2) Load = effective load + mass of all moving parts on the drive

Operating and environmental conditions				
Piston ∅		40	50	63
Operating pressure[1]	[bar]	4 … 8		
Ambient temperature	[°C]	–10 … +60		
Vibration resistance		To DIN/IEC 68 Parts 2 – 6, severity level 1		
Continuous shock resistance		To DIN/IEC 68 Parts 2 – 27, severity level 1		
CE marking (see declaration of conformity)		To EU EMC Directive		
Protection class (displacement encoder)		IP65 to IEC 60 529		
Corrosion resistance class CRC[2]		1		

1) Only applies to applications with Soft Stop SPC11 and axis controller SPC200
2) CRC1: Corrosion resistance class to Festo standard 940 070
Components with light corrosion exposure. Protection for transport and storage. Components without significant decorative function or surface, e.g. installed out of sight internally or behind covers.

Weight [g]			
Piston ∅	40	50	63
Basic weight	3500	6980	10600
Additional weight per 10 mm stroke	59	130	168
Moving load	551	1045	1775

Linear drives DGPI, with integrated displacement encoder

Technical data

Electrical data – Displacement encoder			
Power supply		[V DC]	24 (–15/+25%)
Maximum current consumption		[mA]	90
Resolution		[mm]	≤0.01
Independent linearity[1]	Maximum	[%]	0.02
Temperature coefficient		[ppm/°K]	≤ 15
Interface			Digital, CAN with protocol: SPC-AIF

1) Minimum ±50 µm

Materials

Sectional view

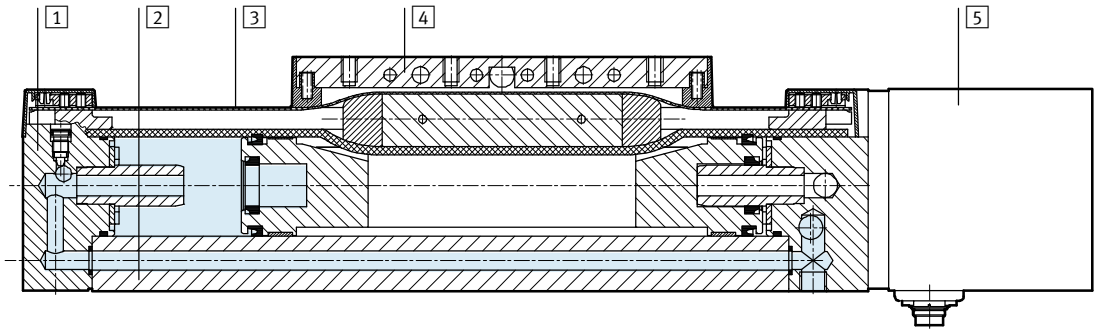

Drive		
1	End cap	Anodised aluminium
2	Profile	Anodised aluminium
3	Cover strip	Corrosion-resistant steel
4	Moment compensator	Anodised aluminium
5	Displacement encoder housing	Anodised aluminium
–	Seals	Nitrile rubber, polyurethane

Note

More technical data

➔ Internet: dpgl

Repetition accuracy

Tolerance t [mm] as a function of stroke l [mm]

Horizontal

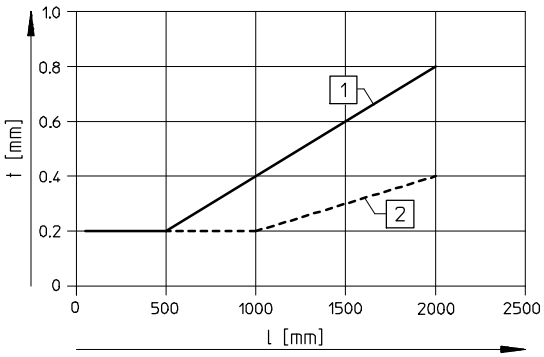

Vertical

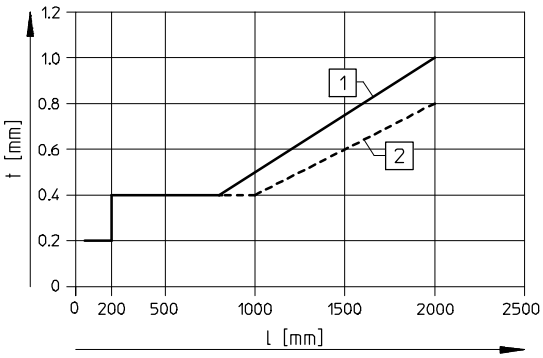

1 With analogue displacement encoder
2 With digital displacement encoder

Linear drives DGPI, with integrated displacement encoder

Technical data

FESTO

Characteristic load values

The indicated forces and torques refer to the centre line of the internal diameter of the profile barrel. These values must not be exceeded during dynamic operation. Special attention must be paid to the deceleration phase.

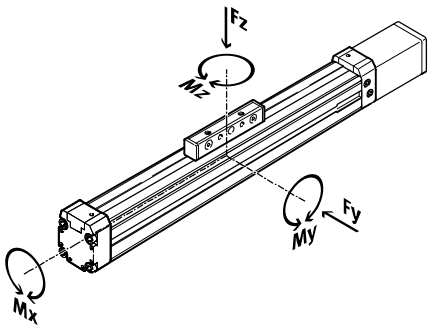

If the drive is simultaneously subjected to several of the indicated forces and torques, the following equation must be satisfied in addition to the indicated maximum loads:

$$0,4 \times \frac{Fz}{Fz_{max.}} + \frac{Mx}{Mx_{max.}} + \frac{My}{My_{max.}} + 0,2 \times \frac{Mz}{Mz_{max.}} \leq 1$$

$$\frac{Fz}{Fz_{max.}} \leq 1 \qquad \frac{Mz}{Mz_{max.}} \leq 1$$

Permissible forces and torques				
Piston ∅		40	50	63
$Fy_{max.}$	[N]	0	0	0
$Fz_{max.}$	[N]	800	1200	1600
$Mx_{max.}$	[Nm]	4	7	8
$My_{max.}$	[Nm]	60	120	120
$Mz_{max.}$	[Nm]	8	15	24

Maximum permissible support span l as a function of force F

The axis may need to be supported with central supports MUP in order to limit deflection in the case of large strokes. The following graphs can be used to determine the maximum permissible support span l as a function of force F acting on the axis.

Force on the surface of the slide

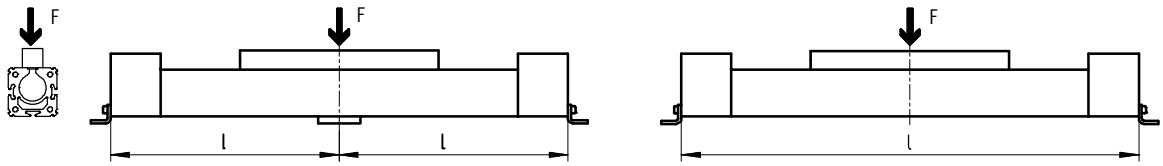

Maximum support span l (without central support) as a function of force F

Piston ∅ 40

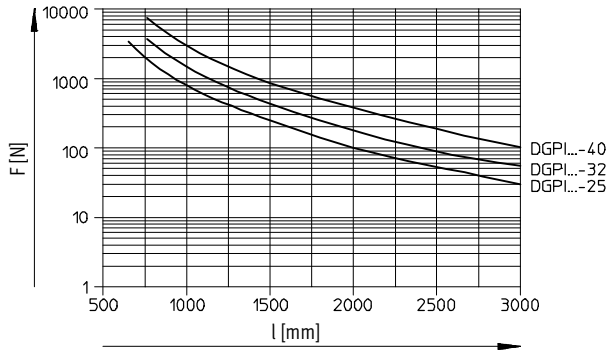

Piston ∅ 50/63

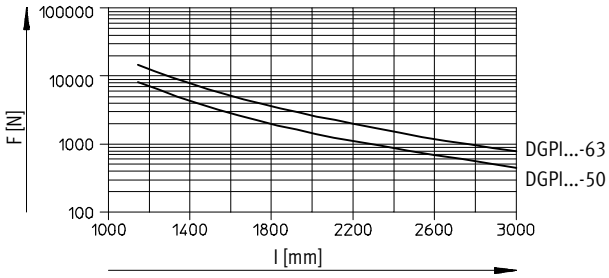

Linear drives DGPI, with integrated displacement encoder

Technical data

FESTO

Dimensions Download CAD data ➔ **www.festo.com**

Standard moment compensator GK

Piston ∅ 40 … 63

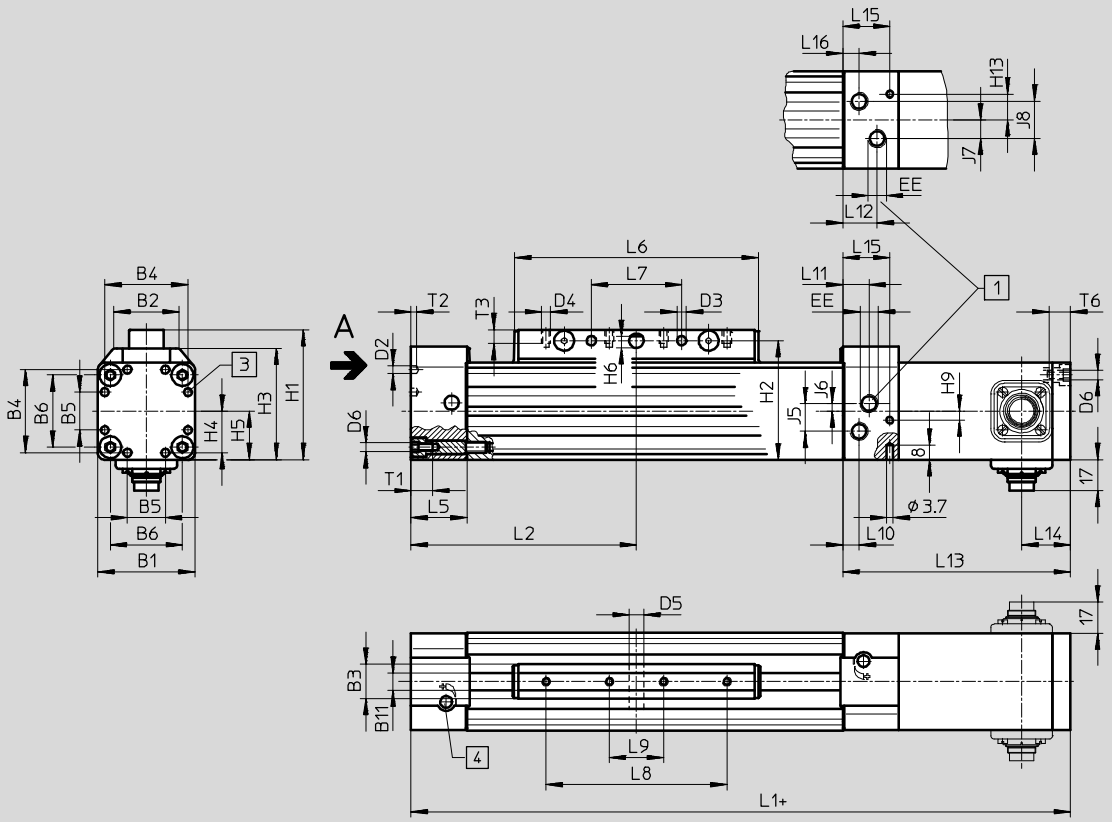

1 Supply ports can optionally be used on three sides on the right-hand end cap

3 Mounting hole for foot mounting HP

4 Regulating screw for adjustable end-position cushioning

11 Connection at rear

12 Connection underneath

13 Connection at front

\+ = plus stroke length

View A **Piston ∅ 40** **Piston ∅ 50** **Piston ∅ 63**

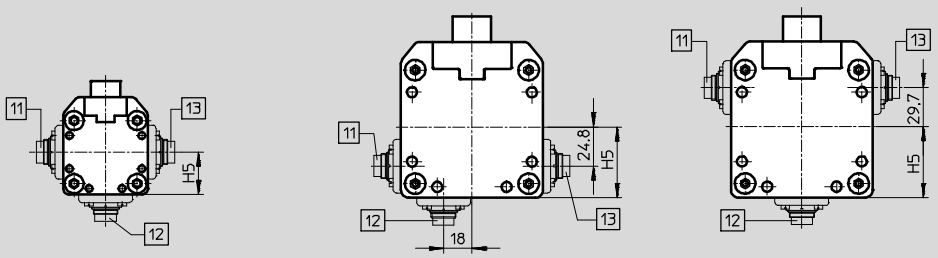

Supply port at both ends D2

Piston ∅ 40 … 63

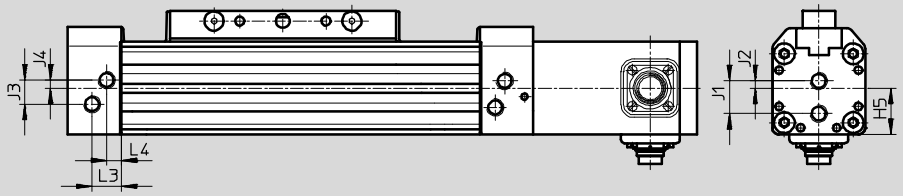

Linear drives DGPI, with integrated displacement encoder

Technical data

Dimensions Download CAD data ➔ **www.festo.com**

Profile barrel

Piston ∅ 40 **Piston ∅ 50** **Piston ∅ 63**

6 Mounting slot for slot nuts NST

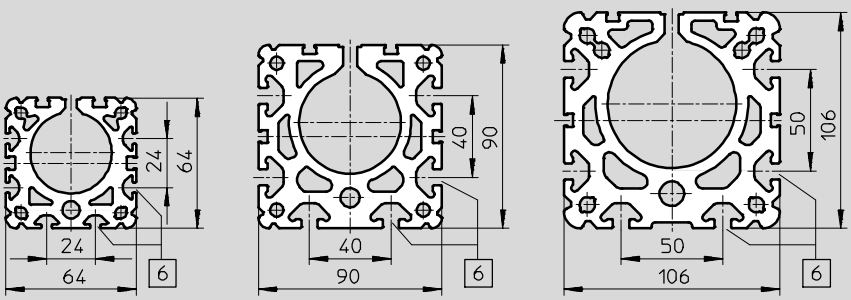

∅ [mm]	B1	B2	B3 +0.2	B4	B5	B6	B11	D2 ∅	D3 ∅ +0.2	D4	D5 ∅ H10	D6
40	64	45.7	21	53	28	49	9.5	4.3	6.5	M6	10	M5
50	90	69.2	24	76	44	72	12	6.3	8.5	M8	12	M6
63	106	84.8	24	89	44	83	12	6.3	8.5	M8	12	M8

∅ [mm]	EE	H1	H2	H3	H4	H5	H6	H9	H13	J1	J2	J3
40	G¼	86	78	71.8	26.5	32	7.7	5	12.75	22	5	21
50	G¼	115	106	99	36	45	9.7	21.8	16.6	31.8	6.8	29.3
63	G⅜	131	122	115	44.5	53	9.7	−28	30	36	8	31

∅ [mm]	J4	J5	J6	J7	J8	L1	L2	L3	L4	L5	L6	L7 ±0.1
40	9.1	23	9.1	12.75	25.5	397	150	11.5	11.5	31	171	70
50	6	20.6	6.8	21	21	465	175	14	14	34	206	80
63	14	27	8	25	25	513	200	14	14	34	234	110

∅ [mm]	L8 ±0.1	L9 ±0.1	L10	L11	L12	L13	L14	L15	L16	T1	T2	T3	T6
40	130	40	10.8	16.5	21	128	29	26	10.8	13.2	4	10.5	12
50	150	50	10.8	18	22.8	149	80	25.2	12	15.2	6	12.5	15
63	190	70	14	24.5	31	147.5	68	16.5	16.5	21.2	6	12.5	20

Linear drives DGPI, with integrated displacement encoder

Ordering data – Modular products

Order code
Mandatory data/options

D2 Supply port at both ends
GK Standard slide

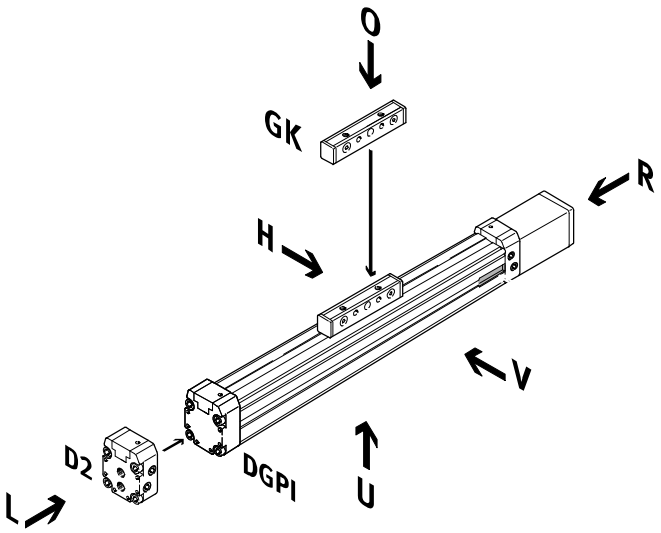

AV Displacement encoder connection at front
AH Displacement encoder connection at rear
AU Displacement encoder connection underneath

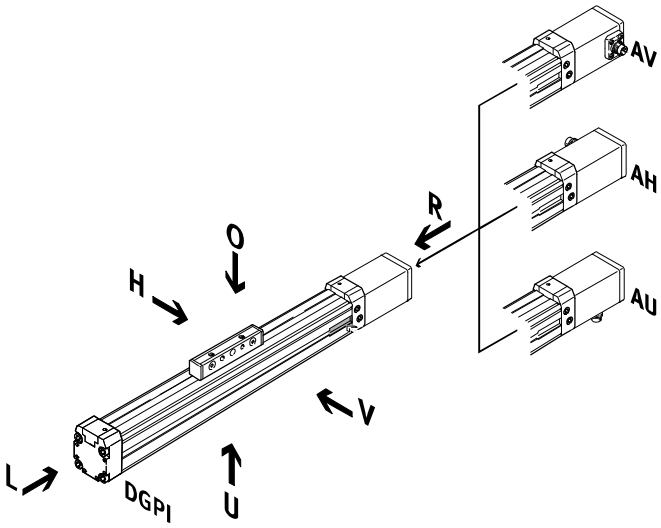

Linear drives DGPI, with integrated displacement encoder

Ordering data – Modular products

Order code
Options

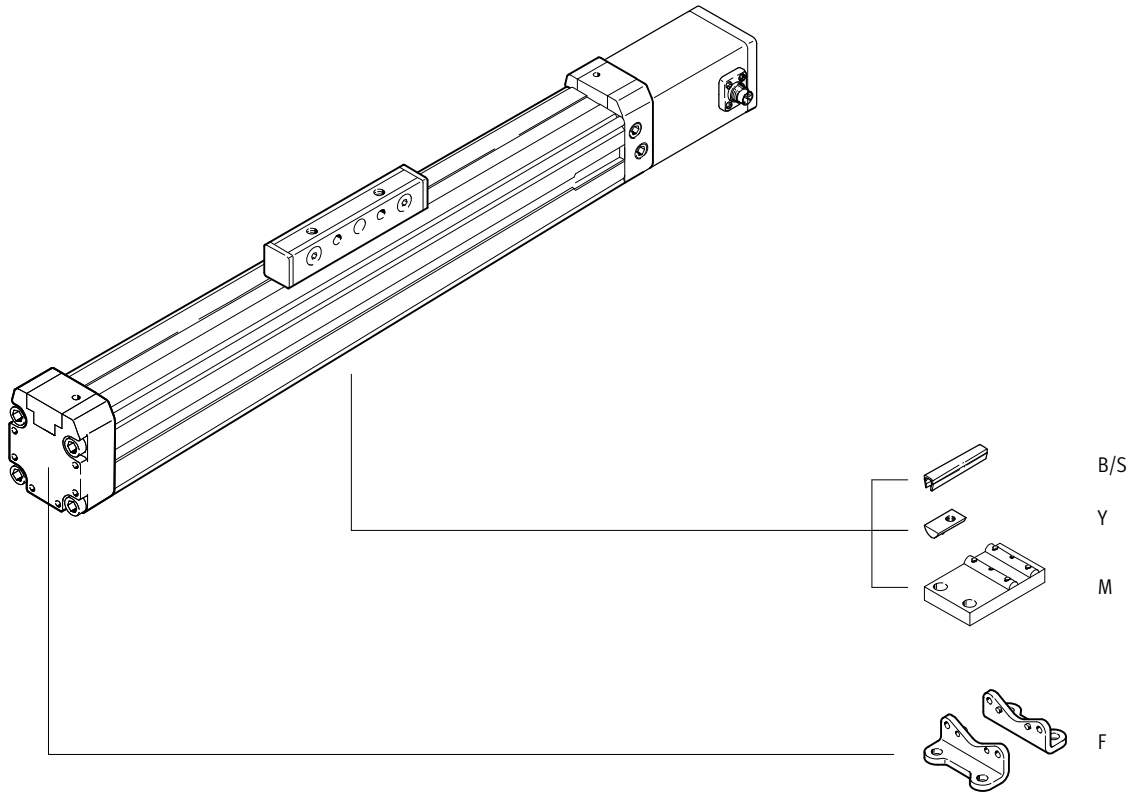

- 1 - Type discontinued
Available up until 2014

Linear drives DGPI, with integrated displacement encoder

Ordering data – Modular products

FESTO

M Mandatory data ➔

Module No.	Function	Size	Stroke	Cushioning	Displacement encoder	Basic design	Connection position for displacement encoder
175136 175137 175138	DGPI	40 50 63	225 … 2000	PPV	AIF	GK	AH AU AV
Ordering example							
175138	**DGPI** –	**63** –	**750** –	**PPV** –	**AIF** –	**GK** –	**AV**

Ordering table

Size	40	50	63	Condi-tions	Code		Enter code
M Module No.	**175136**	**175137**	**175138**				
Function	Pneumatic linear drive with integrated displacement encoder				**DGPI**		DGPI
Size	40	50	63		**-...**		
Stroke [mm]	225; 300; 360; 450; 500; 600; 750; 1000; 1250; 1500; 1750; 2000				**-...**		
Cushioning	Pneumatic cushioning, adjustable at both ends				**-PPV**		-PPV
Displacement encoder	Temposonic with CAN axis interface				**-AIF**		-AIF
Basic design	Standard piston/slide				**-GK**		-GK
Connection position for displacement encoder AIF and compressed air	Connection position for displacement encoder and supply port, rear				**-AH**		
	Connection position for displacement encoder and supply port, underneath				**-AU**		
	Connection position for displacement encoder and supply port, front				**-AV**		

Transfer order code

	DGPI	–		–		–	**PPV**	–	**AIF**	–	**GK**	–	

Linear drives DGPI, with integrated displacement encoder

Ordering data – Modular products

FESTO

0 Options

Supply port	Accessories	Slot cover	Slot nut	Central support	Foot mounting
D2	ZUB	...S ...B	...Y	...M	...F
–	: ZUB	– 2B2S	10Y		F

Ordering table

Size		40	50	63	Condi-tions	Code		Enter code
Supply port		At both ends				**-D2**		
Accessories		Enclosed separately				**:ZUB-**		:ZUB-
Slot cover, 2 pcs., 0.5 m	Sensor slot	1 ... 10				**...S**		
	Mounting slot	1 ... 10				**...B**		
Slot nut	Mounting slot	1 ... 10				**...Y**		
Central support		1 ... 10				**...M**		
Foot mounting		1 ... 10				**...F**		

Transfer order code

–		:	ZUB	–				

Linear drives DGPIL, with integrated displacement encoder

Peripherals overview

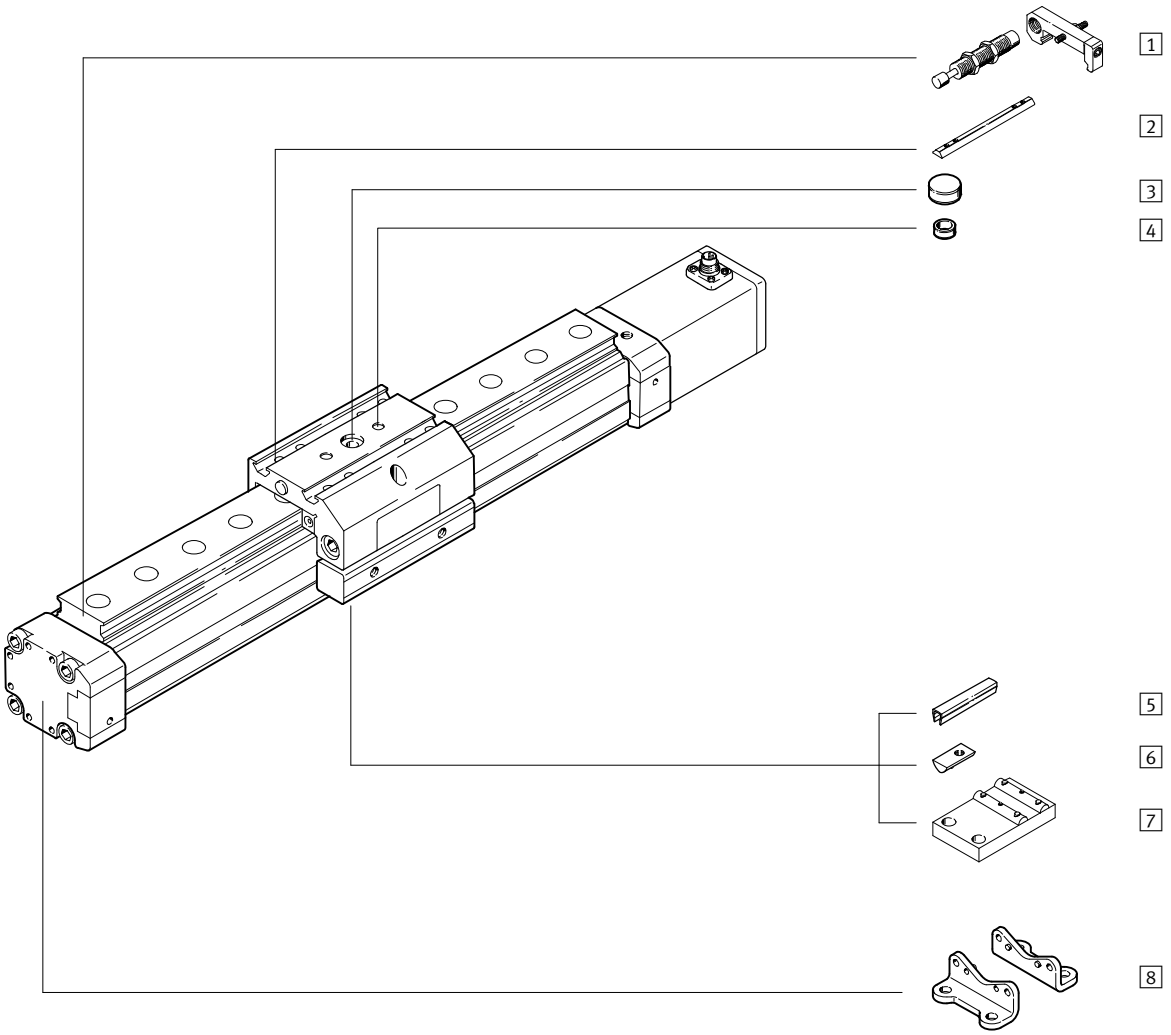

Linear drives DGPIL, with integrated displacement encoder

Peripherals overview

Variants and accessories			
	Type	Description	➔ Page/Internet
1	Shock absorber kit YSR-C/DG-GA/KYP	For avoiding damage at the end stop in the event of malfunction	38
2	Slot nut for slide NSTL	For mounting loads and attachments on the slide	39
3	Central mounting SLZZ	For centring loads and attachments on the slide	39
4	Centring sleeves ZBH-9	For centring loads and attachments on the slide	39
5	Slot cover ABP/ABP-S	For protecting against the ingress of dirt	39
6	Slot nut for mounting slot NST	For mounting attachments	39
7	Central support MUP	For mounting the axis	36
8	Foot mounting HP	For mounting the axis	36

Linear drives DGPIL, with integrated displacement encoder

Type codes

DGPIL	–	40	–	500	–	PPV	–	B	–	KF	–	AIF	–	GK	–	AV	–	SV	–	D2	–	

Type	
DGPIL	Linear drive

Piston ∅ [mm]

Stroke [mm]

Cushioning	
PPV	Adjustable at both ends

Generation	
B	B series

Guide	
KF	Recirculating ball bearing guide

Displacement encoder	
AIF	CAN axis interface

Basic design	
GK	Standard slide

Connection position for displacement encoder and compressed air	
AH	Connections at rear
AU	Connections underneath
AV	Connections at front

Slide attachment position	
SH	Slide at rear
SV	Slide at front

Supply port	
D2	Supply port at both ends

Protected version	
GA	Protected version

Linear drives DGPIL, with integrated displacement encoder

Type codes

➔	: ZUB	–	2S	2X	Z			F	2C

Accessories	
ZUB	Accessories enclosed separately

Slot cover	
...S	Sensor slot
...B	Mounting slot

Slot nut	
...X	For slide
...Y	For profile barrel

Centring sleeves	
...Z	For slide

Central mounting	
...Q	For slide

Central support	
...M	Central support

Foot mounting	
...F	Foot mounting

Shock absorber kit	
...C	Plus retainer for GK/GV
...E	For protected version

Type discontinued
Available up until 2014

Linear drives DGPIL, with integrated displacement encoder

Technical data

Function

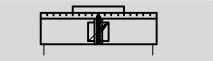

Diameter
40 … 63 mm

Stroke length
225 … 2000 mm

General technical data			
Piston ∅	40	50	63
Design	Piston		
	Moment compensator		
	Profile barrel		
Mode of operation	Double-acting		
Operating medium[1]	Compressed air according to ISO 8573-1:2010 [6:4:4]		
Note about the operating/pilot medium	Lubricated operation not possible Pressure dew point 10 °C below ambient temperature/temperature of medium		
Cushioning	Adjustable at both ends		
Cushioning length [mm]	30		
Position sensing	Integrated displacement encoder		
Measuring principle	Digital, magnetostrictive, non-contacting and absolute measurement		
Type of mounting	Foot mounting		
Stroke[2] [mm]	225; 300; 360; 450; 500; 600; 750; 1000; 1250; 1500; 1750; 2000		
Protection against rotation/guide	Guide rail with slide		
	Recirculating ball bearing		
Protected version[3]	Optional		
Pneumatic connection	G¼		G⅜
Electrical connection	6-pin round plug to DIN 45322		

1) The proportional directional control valve MPYE used requires the characteristic values.
2) Supply of compressed air to each end of the cylinder (feature D2) is absolutely essential for Soft Stop SPC11 as of a length of 500 mm.
3) Protected against particles from above and the side.

Forces [N] and impact energy [Nm]			
Piston ∅	40	50	63
Theoretical force at 6 bar	754	1178	1870
Max. impact energy in the end positions[1]	0.4	0.8	0.8

1) Cushioning PPV must be completely open for applications with Soft Stop SPC11.

Permissible impact velocity:

$$v_{perm.} = \sqrt{\frac{2 \times E_{perm.}}{m_{dead} + m_{load}}}$$

Maximum permissible load:

$$m_{load} = \frac{2 \times E_{perm.}}{v^2} - m_{dead}$$

$v_{perm.}$ Permissible impact velocity
$E_{perm.}$ Maximum impact energy
m_{dead} Moving mass (drive)
m_{load} Moving effective load

Note

These specifications represent the maximum values that can be achieved. Note the maximum permissible impact energy.

Linear drives DGPIL, with integrated displacement encoder

Technical data

Positioning characteristics with end-position controller SPC11				
Piston ∅		40	50	63
Repetition accuracy of a mid-position[1]	[mm]	±2		
Mounting position		Any		
Minimum load, horizontal[2]	[kg]	5	8	12
Maximum load, horizontal[2]	[kg]	75	120	180
Minimum load, vertical[2]	[kg]	5	8	12
Maximum load, vertical[2]	[kg]	25	40	60
Travel time	[s]	➔ SoftStop sizing software: ➔ www.festo.com		
Recommended proportional directional control valve		➔ 40		

1) In the stroke range from 225 … 2000 mm
2) Load = effective load + mass of all moving parts on the drive

Operating and environmental conditions				
Piston ∅		40	50	63
Operating pressure[1]	[bar]	4 … 8		
Ambient temperature	[°C]	–10 … +60		
Vibration resistance		To DIN/IEC 68 Parts 2 – 6, severity level 1		
Continuous shock resistance		To DIN/IEC 68 Parts 2 – 27, severity level 1		
CE marking (see declaration of conformity)		To EU EMC Directive		
Protection class (displacement encoder)		IP65 to IEC 60 529		

1) Only applies to applications with Soft Stop SPC11

Linear drives DGPIL, with integrated displacement encoder

Technical data

Weight [g]			
Piston ∅	40	50	63
Standard slide GK			
Basic weight	5330	10700	16870
Additional weight per 10 mm stroke	99	186	256
Moving load	1700	3000	4990
Additional weights with protected version GA			
Dirt protection cover	4000	–	–
Additional weight per 10 mm stroke	65	–	–
Moving load	2550	–	–

Electrical data – Displacement encoder		
Power supply	[V DC]	24 (–15/+25%)
Maximum current consumption	[mA]	90
Resolution	[mm]	≤ 0.01
Independent linearity[1] Maximum	[%]	0.02
Temperature coefficient	[ppm/°K]	≤ 15
Interface		Digital, CAN with protocol: SPC-AIF

1) Minimum ±50 µm

Materials

Sectional view

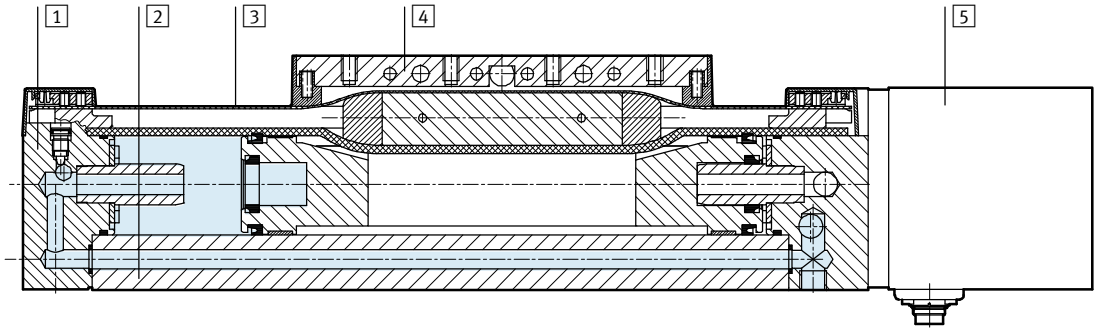

Drive		
1	End cap	Anodised aluminium
2	Profile	Anodised aluminium
3	Cover strip	Corrosion-resistant steel
4	Moment compensator	Anodised aluminium
5	Displacement encoder housing	Anodised aluminium
–	Slide	Anodised aluminium
–	Guide rail	Corrosion-resistant steel
–	Seals	Nitrile rubber, polyurethane

Note

More technical data
➔ Internet: dpgl

Linear drives DGPIL, with integrated displacement encoder

Technical data

Characteristic load values

The indicated forces and torques refer to the centre line of the internal diameter of the profile barrel. These values must not be exceeded during dynamic operation. Special attention must be paid to the deceleration phase.

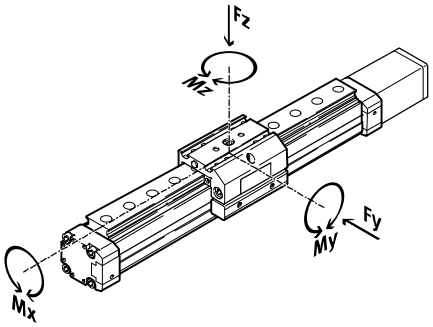

If the drive is simultaneously subjected to several of the indicated forces and torques, the following equation must be satisfied in addition to the indicated maximum loads:

$$\frac{Fy}{Fy_{max.}} + \frac{Fz}{Fz_{max.}} + \frac{Mx}{Mx_{max.}} + \frac{My}{My_{max.}} + \frac{Mz}{Mz_{max.}} \leq 1$$

Permissible forces and torques				
Piston ∅		40	50	63
$Fy_{max.}$	[N]	7300	7300	14050
$Fz_{max.}$	[N]	7300	7300	14050
$Mx_{max.}$	[Nm]	170	240	580
$My_{max.}$	[Nm]	330	460	910
$Mz_{max.}$	[Nm]	330	460	910

Linear drives DGPIL, with integrated displacement encoder

Technical data

Maximum permissible support span l as a function of force F

The axis may need to be supported with central supports MUP in order to limit deflection in the case of large strokes. The following graphs can be used to determine the maximum permissible support span l as a function of force F acting on the axis.

Force on the surface of the slide

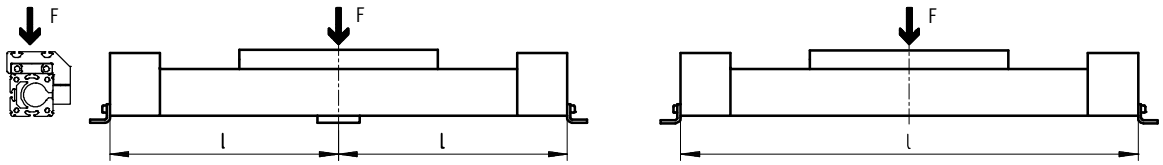

Maximum support span l (without central support) as a function of force F

Piston ∅ 40

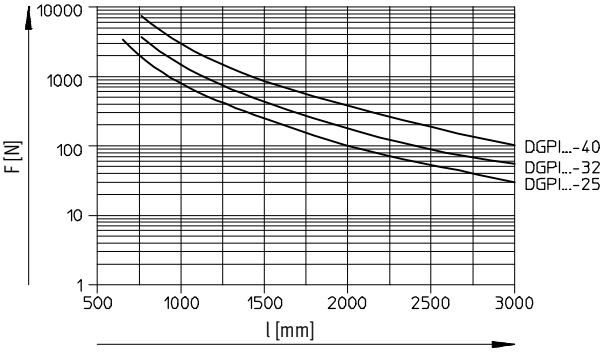

Piston ∅ 50/63

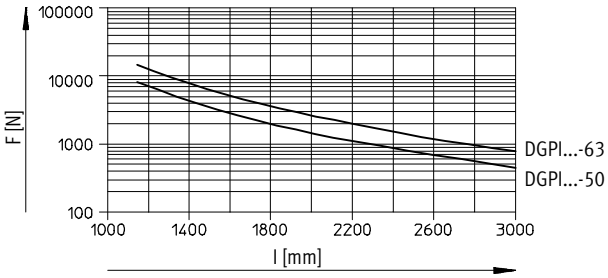

Linear drives DGPIL, with integrated displacement encoder

Technical data

Dimensions Download CAD data ➔ **www.festo.com**

Standard slide GK

Piston ∅40 ... 63

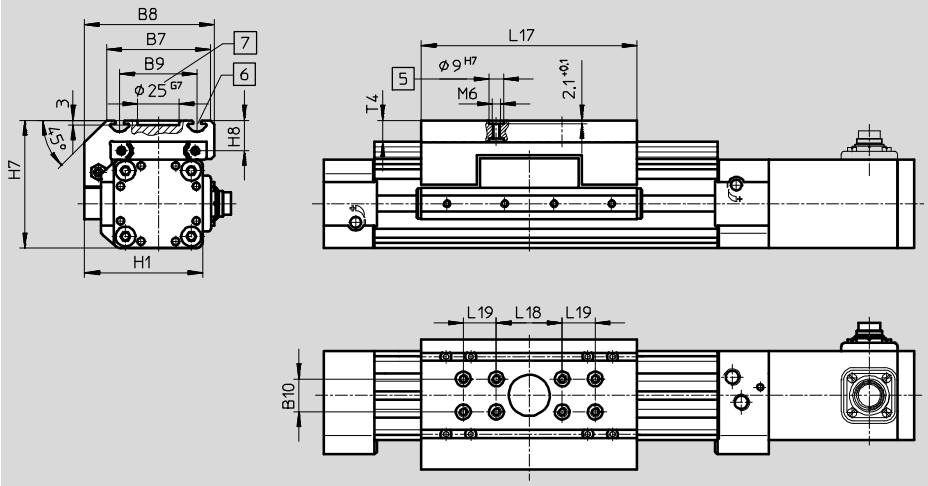

5 Hole for centring sleeve ZBH-9
6 Mounting slot for slot nut NSTL
7 Hole for central mounting SLZZ
\+ = plus stroke length

Basic dimensions
➔ 16

Protected version GA

Piston ∅ 40

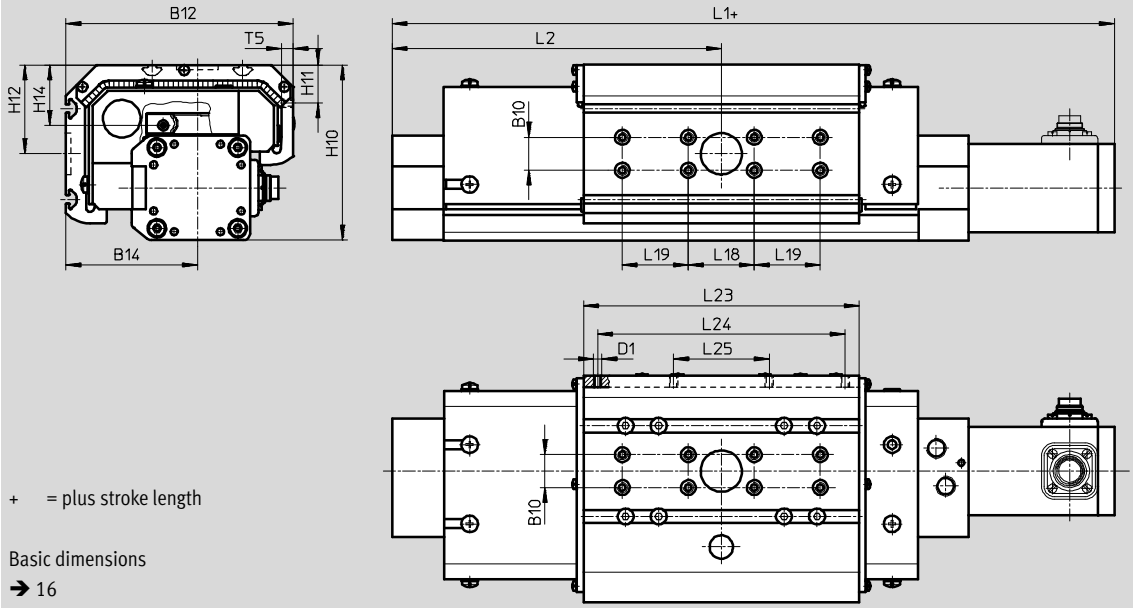

\+ = plus stroke length

Basic dimensions
➔ 16

∅ [mm]	B7	B8	B9	B10 ±0.03	B12	B14	D1	H1	H7	H8	H10
40	78.5	96.5	55 ±0.2	20	137.6	79.6	M5	86	90.5	20	106.6
50	97	122	72 ±0.2	40	–	–	–	115	122.5	26	–
63	121	142	90 ±0.25	40	–	–	–	131	144.5	30	–

∅ [mm]	H11	H12	H14	L1	L2	L17 +0.2	L18 ±0.03	L19 ±0.03	L23	L24	L25	T4 max.	T5
40	23.1	54	36.1	397	150	167	40	40	167	150	58	12.5	7
50	–	–	–	465	175	202	40	40	–	–	–	18.5	–
63	–	–	–	513	200	230	40	40	–	–	–	20.5	–

Linear drives DGPIL, with integrated displacement encoder

Ordering data – Modular products

Order code
Mandatory data

KF Recirculating ball bearing guide
SH Slide at rear
SV Slide at front
D2 Supply port at both ends
GK Standard slide

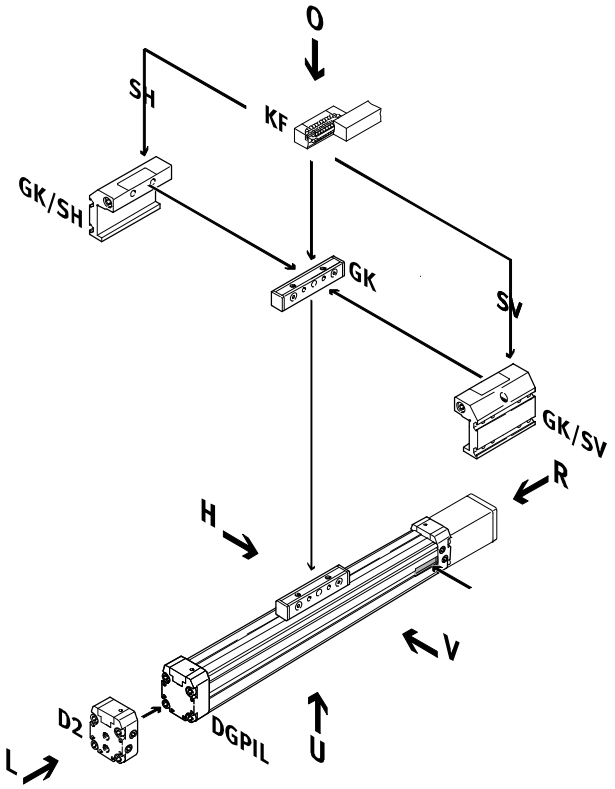

AV Displacement encoder connection to front
AH Displacement encoder connection to rear
AU Displacement encoder connection underneath

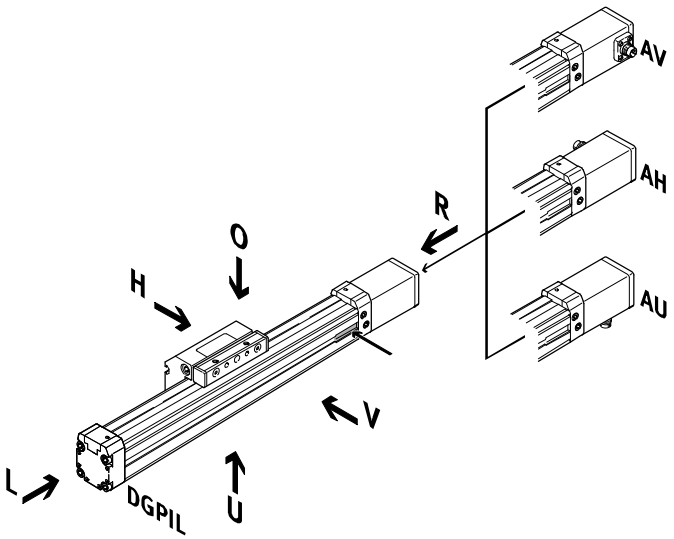

GA Protected version

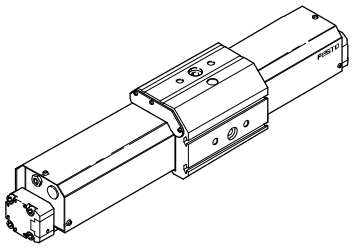

Linear drives DGPIL, with integrated displacement encoder

Ordering data – Modular products

Order code
Options

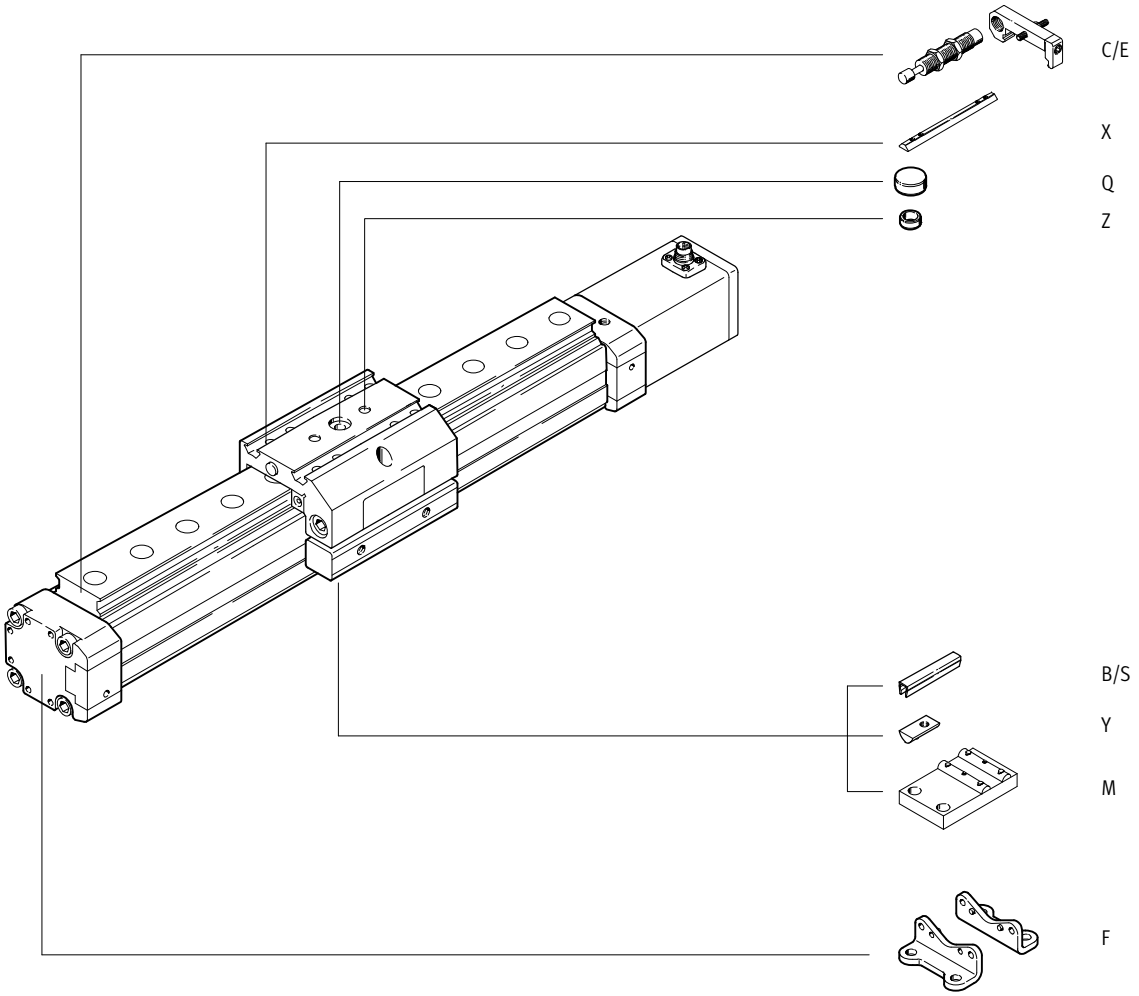

- 1 - Type discontinued
Available up until 2014

Linear drives DGPIL, with integrated displacement encoder

Ordering data – Modular products

FESTO

M Mandatory data →

Module No.	Function	Size	Stroke	Cushioning	Generation	Guide	Displacement encoder	Basic design	Connection position for displacement encoder	Slide attachment position
175136 175137 175138	DGPIL	40 50 63	225 ... 2000	PPV	B	KF	AIF	GK	AH AU AV	SH SV
Ordering example										
175138	**DGPIL** –	**63** –	**450** –	**PPV** –	**B** –	**KF** –	**AIF** –	**GK** –	**AU** –	**SH** –

Ordering table

Size		40	50	63	Conditions	Code		Enter code
M	Module No.	**175136**	**175137**	**175138**				
	Function	Pneumatic linear drive with integrated displacement encoder and slide				**DGPIL**		DGPIL
	Size	40	50	63		**-...**		
	Stroke [mm]	225; 300; 360; 450; 500; 600; 750; 1000; 1250; 1500; 1750; 2000				**-...**		
	Cushioning	Pneumatic cushioning, adjustable at both ends				**-PPV**		-PPV
	Generation	B series				**-B**		-B
	Guide	Recirculating ball bearing guide				**-KF**		-KF
	Displacement encoder	Temposonic with CAN axis interface				**-AIF**		-AIF
	Basic design	Standard piston/slide				**-GK**		-GK
	Connection position for displacement encoder AIF and compressed air	Connection position for displacement encoder and supply port, rear				**-AH**		
		Connection position for displacement encoder and supply port, underneath				**-AU**		
		Connection position for displacement encoder and supply port, front				**-AV**		
	Slide attachment position	Slide at rear				**-SH**		
↓		Slide at front				**-SV**		

Transfer order code

	DGPIL	–		–		–	**PPV**	–	**B**	–	**KF**	–	**AIF**	–	**GK**	–		–		

Linear drives DGPIL, with integrated displacement encoder

Ordering data – Modular products

FESTO

O Options									
Supply port	Protected version	Acces-sories	Slot cover	Slot nut	Centring sleeve	Central support	Central mounting	Foot mounting	Shock absorber
D2	GA	ZUB	...S ...B	...X ...Y	...Z	...M	...Q	...F	...C ...E
– D2	–	: ZUB	– 2S2B	2X				F	2C

Ordering table

Size		40	50	63	Condi-tions	Code		Enter code
Supply port		At both ends				-D2		
O Protected version		Protected roller design for harsh environment	–	–		-GA		
Accessories		Enclosed separately				:ZUB-		:ZUB-
Slot cover, 2 pcs., 0.5 m	Sensor slot	1 ... 10				...S		
	Mounting slot	1 ... 10				...B		
Slot nut	Slide	1 ... 10				...X		
	Mounting slot	1 ... 10				...Y		
Centring sleeve (pack of 10)		10, 20, 30, 40, 50, 60, 70, 80, 90				...Z		
Central support		1 ... 10				...M		
Central mounting		1 ... 10				...Q		
Foot mounting		1 ... 10				...F		
Shock absorber kit	With retainer, 1-fold	1 ... 10			1	...C		
		1 ... 10	–	–	2	...E		

1 **C** Not with protected version GA.
2 **E** Only with protected version GA.

Transfer order code

–		–		: ZUB	–							

Foot mounting HP
(order code: F)

Material:
Galvanised steel

Free of copper and PTFE

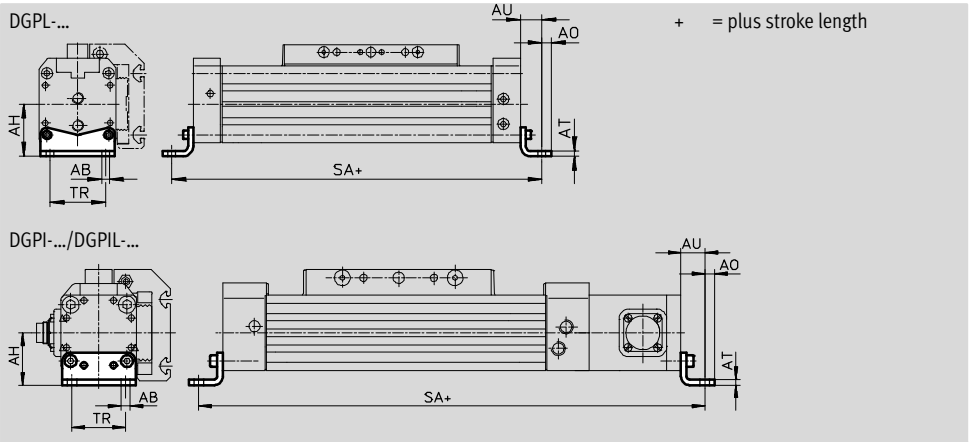

Dimensions and ordering data											
For ∅ [mm]	AB ∅	AH	AO	AT	AU	SA DGPL	SA DGPI(L)	TR	Weight [g]	Part No.	Type
40	6.6	46	8.5	5	17.5	335	432	45	188	**150733**	**HP-40**
50	9	61	11	6	25	400	515	65	243	**150734**	**HP-50**
63	11	69	13.5	6	28	456	569	75	305	**150735**	**HP-63**

Central support MUP
(order code: M)

Material:
Galvanised steel

Free of copper and PTFE


MUP-40

For piston ∅ 40 ... 63 mm

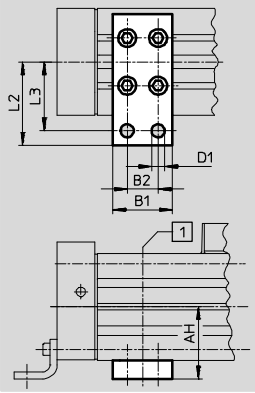

1 Position of the central support along the profile barrel is freely selectable.
Please note span.

Dimensions and ordering data									
For ∅ [mm]	AH	B1	B2	D1 ∅	L2	L3	Weight [g]	Part No.	Type
40	46	35	22	6.6	47	40	126	**150738**	**MUP-40**
50	61	50	26	11	70	58	241	**150739**	**MUP-50**
63	69	50	26	11	77	65	340	**150800**	**MUP-63**

Shock absorber DG-GA
for DGPIL
Protected version GA
(order code: E)

Materials:
Housing: Galvanised steel
Piston rod: High-alloy steel
Seals: NBR, PUR
Free of copper and PTFE

Ordering data			
For ∅ [mm]	Weight [g]	Part No.	Type
40	140	**192877**	**DG-GA-40-YSR**

Shock absorber YSR-...-C
for DGPL/DGPIL
(order code: C)

Materials:
Housing: Galvanised steel
Piston rod: High-alloy steel
Seals: NBR, PUR
Free of copper and PTFE

Note
Shock absorber YSRW with progressive characteristics
➔ Internet: ysrw

Ordering data			
For ∅ [mm]	Weight [g]	Part No.	Type
40	140	**34573**	**YSR-16-20-C**
50	140	**34573**	**YSR-16-20-C**
63	240	**34574**	**YSR-20-25-C**

Shock absorber retainer KYP
for DGPL/DGPIL
(order code: C)

Materials:
Retainer: Aluminium
Sleeve: Corrosion-resistant steel

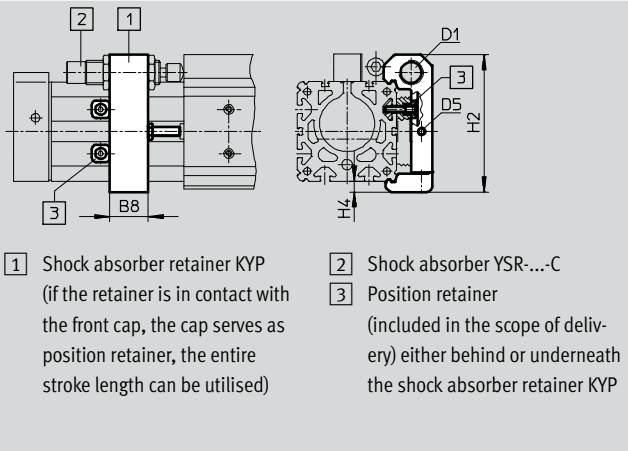

1 Shock absorber retainer KYP (if the retainer is in contact with the front cap, the cap serves as position retainer, the entire stroke length can be utilised)

2 Shock absorber YSR-...-C

3 Position retainer (included in the scope of delivery) either behind or underneath the shock absorber retainer KYP

Dimensions and ordering data

For ∅ [mm]	B8	D1	D5	H2	H4	Weight [g]	Part No.	Type
40	32	M22x1.5	M5	102	8	209	**158910**	**KYP-40**
50	35	M22x1.5	M8	124	10	415	**158911**	**KYP-50**
63	44	M26x1.5	M10	152.5	11.5	609	**158912**	**KYP-63**

Ordering data – Push-in fittings

Technical data ➔ Internet: quick star

	For ∅ [mm]	Comment	Part No.	Type	PU[1)]
	40, 50	For connecting compressed air tubing with standard O.D.	**186099**	**QS-G¼-8**	10
			186101	**QS-G¼-10**	
	63		**186100**	**QS-G⅜-8**	
			186102	**QS-G⅜-10**	
			186103	**QS-G⅜-12**	

1) Packaging unit

Ordering data						Technical data ➔ Internet: mounting component
	For ∅ [mm]	Comment	Order code	Part No.	Type	PU[1]
Slot nut NST						
	40	For mounting slot	Y	**150914**	**NST-5-M5**	1
	50, 63			**150915**	**NST-8-M6**	
Slot nut NSTL						
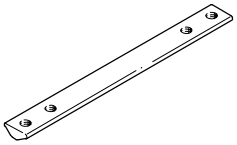	40	For slide	X	**158412**	**NSTL-40**	1
	50			**158413**	**NSTL-50**	
	63			**158414**	**NSTL-63**	
Centring sleeve ZBH						
	40 … 63	For slide	Z	**150927**	**ZBH-9**	10
Central mounting SLZZ						
	40	For slide	Q	**150901**	**SLZZ-25/16**	1
	50, 63			**150904**	**SLZZ-50/40**	
Slot cover ABP						
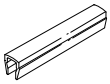	40	For mounting slot Every 0.5 m	B	**151681**	**ABP-5**	2
	50, 63			**151682**	**ABP-8**	
Slot cover ABP-S						
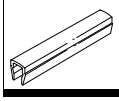	40 … 63	For sensor slot Every 0.5 m	S	**563360**	**ABP-5-S1**	2

1) Packaging unit

Ordering data – Proportional directional control valves Technical data ➔ Internet: mpye

Selection aid

Application	For ∅ [mm]	Stroke [mm] 225	300	360	450	500	600	750	1000	1250	1500	1750	2000
Horizontal/vertical	**For applications with Soft Stop end-position controller SPC11**												
	40	2/1	2/1	2/1	2/1	2/2	3/3	3/4	3/4	3/4	3/4	3/4	3/4
	50	1/1	2/1	2/2	3/2	3/3	4/3	4/4	4/4	4/4	4/4	4/4	4/4
	63	2/1	2/2	3/3	3/3	4/4	4/4	4/4	4/4	4/4	4/4	4/4	4/4

Valve	Selection number	Part No.	Type
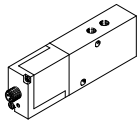	1	**151692**	**MPYE-5-⅛-LF-010-B**
	2	**151693**	**MPYE-5-⅛-HF-010-B**
	3	**151694**	**MPYE-5-¼-010-B**
	4	**151695**	**MPYE-5-⅜-010-B**

Note

The representation e.g. 2/1 in the columns means:

Selection number 2 for horizontal application		Selection number 1 for vertical application	
151693	MPYE-5-⅛-HF-010-B	151692	MPYE-5-⅛-LF-010-B

Ordering data – Proximity sensor for T-slot, magnetic reed						Technical data ➔ Internet: sme
	Type of mounting	Switching output	Electrical connection	Cable length [m]	Part No.	Type
N/O contact						
	Insertable in the slot lengthwise, flush with the cylinder profile	Contacting	Cable, 3-wire	2.5	**150855**	**SME-8-K-LED-24**
			Plug M8x1, 3-pin	0.3	**150857**	**SME-8-S-LED-24**
N/C contact						
	Insertable in the slot lengthwise, flush with the cylinder profile	Contacting	Cable, 3-wire	7.5	**160251**	**SME-8-O-K-LED-24**

Ordering data – Proximity sensor for T-slot, magneto-resistive						Technical data ➔ Internet: smt
	Type of mounting	Switching output	Electrical connection	Cable length [m]	Part No.	Type
N/O contact						
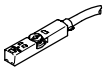	Insertable in the slot from above, flush with the cylinder profile, short design	PNP	Cable, 3-wire	2.5	**574335**	**SMT-8M-A-PS-24V-E-2,5-OE**
N/C contact						
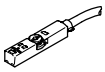	Insertable in the slot from above, flush with the cylinder profile, short design	PNP	Cable, 3-wire	7.5	**574340**	**SMT-8M-A-PO-24V-E-7,5-OE**

Ordering data – Connecting cables					Technical data ➔ Internet: nebu
	Electrical connection, left	Electrical connection, right	Cable length [m]	Part No.	Type
	Straight socket, M8x1, 3-pin	Cable, open end, 3-wire	2.5	**541333**	**NEBU-M8G3-K-2.5-LE3**
			5	**541334**	**NEBU-M8G3-K-5-LE3**
	Angled socket, M8x1, 3-pin	Cable, open end, 3-wire	2.5	**541338**	**NEBU-M8W3-K-2.5-LE3**
			5	**541341**	**NEBU-M8W3-K-5-LE3**

Adapter kit
HMVK

Material:
Wrought aluminium alloy
Free of copper and PTFE
RoHS-compliant

Note
The kit includes the individual mounting interface as well as the necessary mounting material.

Permissible drive/drive combinations with adapter kit

Download CAD data ➔ **www.festo.com**

Combination	1 Drive	2 Drive	Adapter kit		
	Size	Size	CRC[1]	Part No.	Type
DGP(I)L, DGE, DGEA/DGPIL	DG...	DGPIL	HMVK		
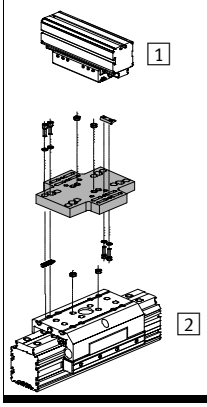	Direct slide/slide mounting				
	18[2], 25, 32[3]	40	2	**196781**	**HMVK-DL32/40-DLA18-32**
	25[2], 40	63		**196783**	**HMVK-DL63-DLA25/40**
	Direct slide/profile mounting				
	18	18	2	**196780**	**HMVK-DL18/25-DL-18/25**
	32[3], 40	40		**196781**	**HMVK-DL32/40-DLA18-32**

1) Corrosion resistance class CRC 2 to Festo standard FN 940070
Moderate corrosion stress. Indoor applications in which condensation may occur. External visible parts with primarily decorative requirements for the surface and which are in direct contact with the ambient atmosphere typical for industrial applications.
2) Only for DGEA-...
3) Only for DGPL/DGPIL-...