# Standards-based cylinders DDPC, integrated displacement encoder

# Product range overview

| Function | Type | Description |
|---|---|---|
| **Drives** | **Rodless** | |
| | DDLI  | • Without guide<br>• With displacement encoder for contactless measurement<br>• Based on linear drive DGC-K<br>• Supply ports on end face<br>• System product for handling and assembly technology |
| | DGCI  | • With guide<br>• With displacement encoder for contactless measurement<br>• Based on linear drive DGC<br>• Choice of supply ports on end face or front<br>• System product for handling and assembly technology |
| | **With piston rod** | |
| | DNCI  | • With displacement encoder for contactless measurement<br>• Range of piston rod variants<br>• Standards-based cylinder to ISO 15552 |
| | DDPC  | • With displacement encoder for contactless measurement<br>• Range of piston rod variants<br>• Standards-based cylinder to ISO 15552 |
| | DNC/DSBC  | • With attached potentiometer MLO-LWG<br>• Range of piston rod variants<br>• Standards-based cylinder to ISO 15552 |
| | | |
| **Swivel module** | **Swivel module** | |
| |  | • Based on swivel module DSM<br>• Integrated rotary potentiometer<br>• Compact design<br>• Wide range of mounting options |

## Product range overview

| Piston diameter | Stroke/swivel angle [mm/°] | Suitable for positioning with CPX-CMAX | for end-position controller CPX-CMPX | for end-position controller SPC11 | for use as a measuring cylinder |
|---|---|---|---|---|---|
| **Rodless** | | | | | |
| 25, 32, 40, 63 | 100, 160, 225, 300, 360, 450, 500, 600, 750, 850, 1000, 1250, 1500, 1750, 2000 | ■ | ■ | ■ | ■ |
| 18, 25, 32, 40, 63 | 100, 160, 225, 300, 360, 450, 500, 600, 750, 850, 1000, 1250, 1500, 1750, 2000 | ■ | ■ | ■ | ■ |
| **With piston rod** | | | | | |
| 32, 40, 50, 63 | 10 ... 2000 | – | – | – | ■ |
| | 100 ... 750 | ■ | ■ | ■ | – |
| 80, 100 | 10 ... 2000 | – | – | – | ■ |
| | 100 ... 750 | ■ | ■ | ■ | – |
| 32, 40, 50, 63, 80 | 100, 150, 225, 300, 360, 450, 600, 750 | ■ | ■ | ■ | ■ |
| **Swivel module** | | | | | |
| 25, 40, 63 | 270 | ■ | ■ | ■ | ■ |

# Key features

## Servo-pneumatic drive technology

Positioning and Soft Stop applications as an integral component of the valve terminal CPX – the modular peripheral system for decentralised automation tasks. The modular design means that valves, digital inputs and outputs, positioning modules and end-position controllers, as appropriate to the application, can be combined in almost any way on the CPX terminal.

Advantages:
- Pneumatics and electrics – control and positioning on one platform
- Innovative positioning technology – piston rod drives, rodless drives, rotary drives
- Control via fieldbus
- Remote maintenance, remote diagnostics, web server, SMS- and e-mail alerts are all possible via TCP/IP
- Modules can be quickly exchanged and expanded without altering the wiring

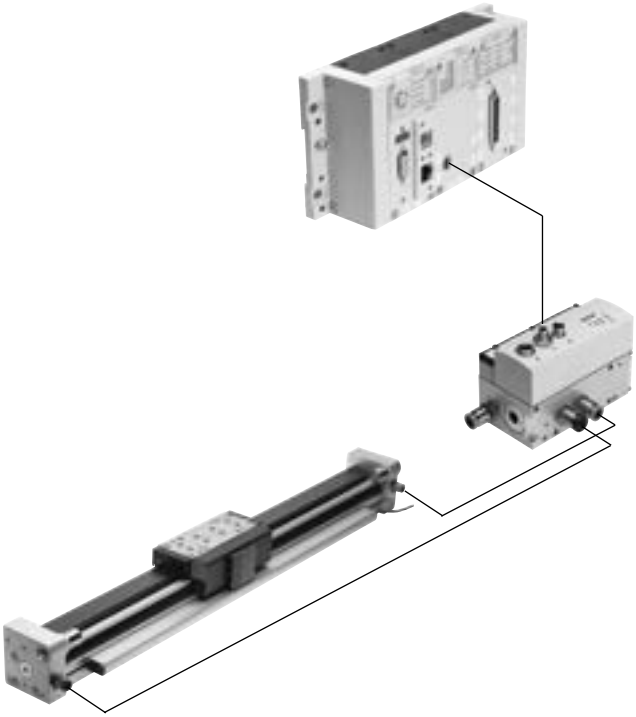

## Axis controller CPX-CMAX

Free choice:
Position and force control, directly actuated or selected from one of 128 configurable position sets.
If you are looking for something more: the configurable record sequencing function enables simple functional sequences to be realised in the axis controller CPX-CMAX.
Everything is recognisable:
auto identification detects every station with its device data on the controller CPX-CMAX.

Also included:
Actuation of a brake or clamping unit via the proportional directional control valve VPWP is also part of the scope of performance of the controller CPX-CMAX.
Up to 8 modules (max. 8 axes) can be operated in parallel and independently of each other.
Commissioning via FCT (Festo configuration software) or via fieldbus:
no programming, only configuration.

Advantages:
- Greater flexibility
- OEM friendly – commissioning also via fieldbus
- Easy installation and fast commissioning
- Cost-effective
- You program the system in your PLC environment

# Key features

## End-position controller CPX-CMPX

Data sheets ➔ Internet: cpx-cmpx

Fast travel between the mechanical end stops of the cylinder, stopping gently and without impact in the end position.
Fast commissioning via control panel, fieldbus or handheld unit.
Improved standstill control.
Actuation of a brake or clamping unit via the proportional directional control valve VPWP is an integral part of the controller CMPX.

Depending on the fieldbus chosen, up to 9 end-position controllers can be actuated on the CPX terminal.
All system data can be read and written via the fieldbus, including, for example, the mid-positions.

Advantages:
- Greater flexibility
- OEM friendly – commissioning also via fieldbus
- Easy installation and fast commissioning
- Cost-effective
  - Up to 30% faster cycle rates
  - Significantly reduced system vibration
- Improved work ergonomics thanks to significantly reduced noise level
- The extended diagnostics help to reduce the service time of the machine

## Proportional directional control valve VPWP

Data sheets ➔ Internet: vpwp

The 5/3-way proportional directional control valve for applications with Soft Stop and pneumatic positioning.
Fully digitalised – with integrated pressure sensors, with new diagnostic functions.
In sizes 4, 6, 8 and 10.
Flow rates of 350, 700, 1400 and 2000 l/min.

With switching output for controlling a brake.
Colour-coded supply ports.
Pre-assembled cables guarantee faultless and fast connection with the controllers CPX-CMPX and CPX-CMAX.

Advantages:
- Easy installation and fast commissioning
- Reduction of system downtimes thanks to the new diagnostic options
- With switching output for controlling a brake/clamping unit

## Measuring module CPX-CMIX

Data sheets ➔ Internet: cpx-cmix

Fully digital data acquisition and transmission means that pneumatic cylinders can be used as sensors. With very high repetition accuracy and incorporating both analogue and digital measuring sensors.

Suitable for the linear drive DGCI with displacement encoder for measuring absolute values, for the piston rod drive DNCI/DDPC with incremental displacement encoder or alternatively for a potentiometer of type MLO.

Advantages:
- All process steps can be documented, which improves quality
- An adjustable contact force (via pressure regulator) increases the precision of the "displacement sensor"
- With displacement encoders for measuring absolute values, the actual position is immediately available after the system is switched on

# Drive options

## System with linear drive DDLI, DGCI

Data sheets ➔ Internet: ddli or dgci

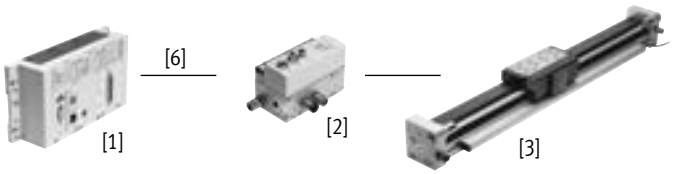


[1] Controller module CPX-CMPX or CPX-CMAX
[2] Proportional directional control valve VPWP
[3] Linear drive DDLI, DGCI with displacement encoder
[6] Connecting cable KVI-CP-3-...

- Pneumatic rodless linear drive with displacement encoder, with or without recirculating ball bearing guide
- Displacement encoder with absolute and contactless measurement
- Diameters:
  - For DGCI: 18 ... 63 mm
  - For DDLI: 25 ... 63 mm
- Stroke: 100 ... 2000 mm in fixed lengths
- Range of applications: Soft Stop and pneumatic positioning
- Loads from 1 ... 180 kg
- No sensor interface required

Advantages:
- Complete drive unit
- DDLI for easy connection to the customer's guide system
- Excellent running characteristics
- For fast and accurate positioning up to ±0.2 mm (only with axis controller CPX-CMAX)

## System with standards-based cylinder DNCI, DDPC

Data sheets ➔ Internet: dnci

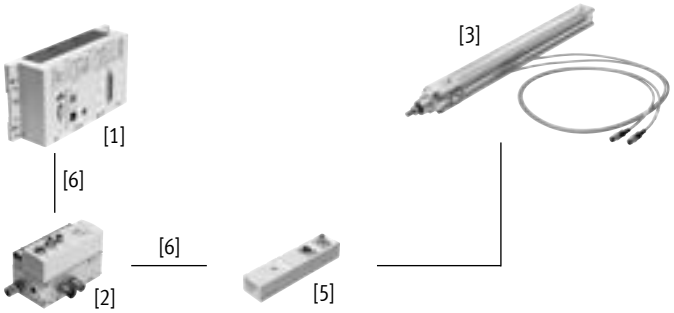


[1] Controller module CPX-CMPX or CPX-CMAX
[2] Proportional directional control valve VPWP
[3] Standards-based cylinder DNCI, DDPC with displacement encoder
[5] Sensor interface CASM-S-D3-R7
[6] Connecting cable KVI-CP-3-...

- Standards-based cylinder with integrated displacement encoder, complies with DIN ISO 6432, VDMA 24 562, NF E 49 003.1 and Uni 10 290
- Displacement encoder with contactless and incremental measurement
- Diameter: 32 ... 100 mm
- Stroke: 100 ... 750 mm
- Range of applications: Soft Stop and pneumatic positioning
- Loads from 3 ... 450 kg and the corresponding sensor interface CASM-S-D3-R7
- Pre-assembled cables guarantee faultless and fast electrical connection

Advantages:
- Compact drive unit
- Can be used universally
- Also with guide unit
- For fast and accurate positioning up to ±0.5 mm (only with axis controller CPX-CMAX)

# Drive options

## System with swivel module DSMI

Data sheets ➔ Internet: dsmi

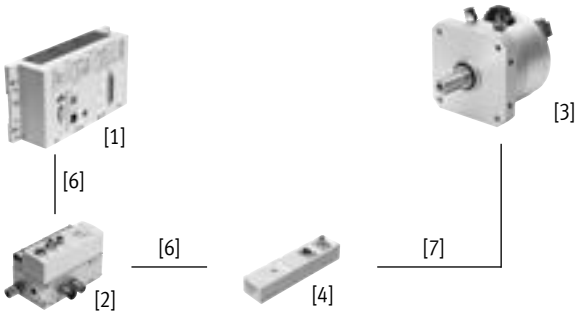


[1] Controller module CPX-CMPX or CPX-CMAX
[2] Proportional directional control valve VPWP
[3] Swivel module DSMI with displacement encoder
[4] Sensor interface CASM-S-D2-R3
[6] Connecting cable KVI-CP-3-...
[7] Connecting cable NEBC-P1W4-K-0.3-N-M12G5

- Swivel module DSMI with integrated displacement encoder
- Identical design to pneumatic swivel module DSM
- Absolute displacement encoder based on a potentiometer
- Swivel range from 0 ... 270°
- Size: 25, 40, 63
- Max. torque: 5 ... 40 Nm
- Range of applications: Soft Stop and pneumatic positioning
- Mass moments of inertia of 15 ... 6000 kgcm$^2$ and the corresponding sensor interface CASM-S-D2-R3
- Pre-assembled cables guarantee faultless and fast connection with the proportional directional control valve VPWP

Advantages:
- Complete drive unit, compact, can be used immediately
- High angular acceleration
- With adjustable fixed stops
- For fast and accurate positioning up to ±0.2 mm (only with axis controller CPX-CMAX)

## System with potentiometer

Data sheets ➔ Internet: casm

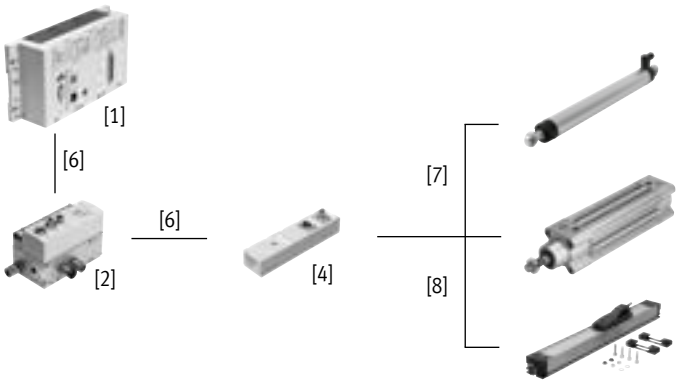


[1] Controller module CPX-CMPX or CPX-CMAX
[2] Proportional directional control valve VPWP
[4] Sensor interface CASM-S-D2-R3
[6] Connecting cable KVI-CP-3-...
[7] Connecting cable NEBC-P1W4-K-0.3-N-M12G5
[8] Connecting cable NEBC-A1W3-K-0.4-N-M12G5

- Attachable potentiometers with absolute measurement, with high degree of protection
- With connecting rod or moment compensator
- Measuring range:
  Connecting rod: 100 ... 750 mm
  Moment compensator:
  225 ... 2000 mm
- Pre-assembled cables guarantee faultless and fast connection with the sensor interface CASM
- Range of applications: Soft Stop and pneumatic positioning with cylinder diameters of 25 ... 80 mm
- Loads from 1 ... 300 kg

Advantages:
- Easy installation and fast commissioning
- Cost-effective
- Can also be used in harsh ambient conditions
- Variety of drives: CPX-CMPX and CPX-CMAX also support cylinders with external displacement encoder

# Drive options

| System components for Soft Stop systems with end-position controller CPX-CMPX | Linear drive | Standards-based cylinder | Swivel module | Displacement encoder | | → Page/ Internet |
|---|---|---|---|---|---|---|
| | DDLI/DGCI | DNCI, DDPC | DSMI | MLO-LWG/-TLF | MME-MTS | |
| End-position controller CPX-CMPX | ■ | ■ | ■ | ■ | ■ | cmpx |
| Proportional directional control valve VPWP | ■ | ■ | ■ | ■ | ■ | vpwp |
| Sensor interface CASM-S-D2-R3 | – | – | ■ | ■ | – | casm |
| Sensor interface CASM-S-D3-R7 | – | ■ | – | – | – | casm |
| Connecting cable KVI-CP-3-... | ■ | ■ | ■ | ■ | ■ | kvi |
| Connecting cable NEBC-P1W4-... | – | – | ■ | ■ / – | – | nebc |
| Connecting cable NEBC-A1W3-... | – | – | – | – / ■ | – | nebc |
| Connecting cable NEBP-M16W6-... | – | – | – | – | ■ | vpwp |

| System components for pneumatic positioning systems with axis controller CPX-CMAX | Linear drive | Standards-based cylinder | Swivel module | Displacement encoder | | → Page/ Internet |
|---|---|---|---|---|---|---|
| | DDLI/DGCI | DNCI, DDPC | DSMI | MLO-LWG/-TLF | MME-MTS | |
| Axis controller CPX-CMAX | ■ | ■ | ■ | ■ | ■ | cmax |
| Proportional directional control valve VPWP | ■ | ■ | ■ | ■ | ■ | vpwp |
| Sensor interface CASM-S-D2-R3 | – | – | ■ | ■ | – | casm |
| Sensor interface CASM-S-D3-R7 | – | ■ | – | – | – | casm |
| Connecting cable KVI-CP-3-... | ■ | ■ | ■ | ■ | ■ | kvi |
| Connecting cable NEBC-P1W4-... | – | – | ■ | ■ / – | – | nebc |
| Connecting cable NEBC-A1W3-... | – | – | – | – / ■ | – | nebc |
| Connecting cable NEBP-M16W6-... | – | – | – | – | ■ | vpwp |

| System components for measuring cylinders with measuring module CPX-CMIX | Linear drive | Standards-based cylinder | Swivel module | Displacement encoder | | → Page/ Internet |
|---|---|---|---|---|---|---|
| | DDLI/DGCI | DNCI, DDPC | DSMI | MLO-LWG/-TLF | MME-MTS | |
| Measuring module CPX-CMIX-M1-1 | ■ | ■ | ■ | ■ | ■ | cmix |
| Sensor interface CASM-S-D2-R3 | – | – | ■ | ■ | – | casm |
| Sensor interface CASM-S-D3-R7 | – | ■ | – | – | – | casm |
| Connecting cable KVI-CP-3-... | (■)[1] | ■ | ■ | ■ | (■) | kvi |
| Connecting cable NEBC-P1W4-... | – | – | ■ | ■ / – | – | nebc |
| Connecting cable NEBC-A1W3-... | – | – | – | – / ■ | – | nebc |
| Connecting cable NEBP-M16W6-... | – | – | – | – | ■ | vpwp |

1) As an extension

## Type codes

| 001 | Series | |
|---|---|---|
| **DDPC** | Standards-based cylinder, integrated displacement encoder | |

| 002 | Protection against rotation | |
|---|---|---|
| **D** | With guide unit | |
| **Q** | With protection against rotation | |

| 003 | Piston diameter | |
|---|---|---|
| **80** | 80 | |
| **100** | 100 | |

| 004 | Stroke | |
|---|---|---|
| **...** | 10 ... 2000 | |

| 005 | Clamping unit | |
|---|---|---|
| | None | |
| **C** | Attached | |

| 006 | Piston rod type | |
|---|---|---|
| | At one end | |
| **T** | Through piston rod | |

| 007 | Cushioning | |
|---|---|---|
| **P** | Elastic cushioning rings/plates on both sides | |

| 008 | Position sensing | |
|---|---|---|
| **A** | For proximity sensor | |

| 009 | Piston rod extension | |
|---|---|---|
| | None | |
| **...E** | 1 ... 500 mm | |

# Peripherals overview

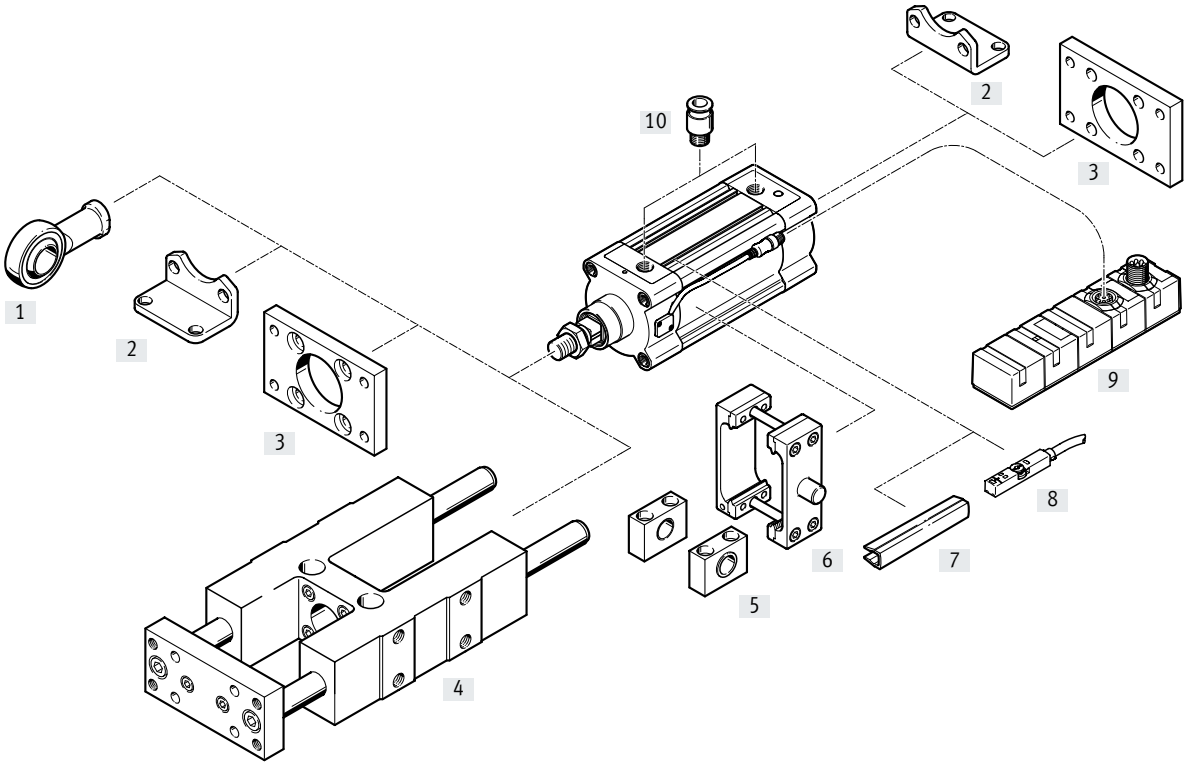


**Note**

If the drive DDPC is used without an end position controller CPX-CMPX, SPC11 or an axis controller CPX-CMAX, e.g. as a measuring cylinder, then the standard accessories of the drive DNC can be used.

# Peripherals overview

| Accessories | | | |
|---|---|---|---|
| | Type | Description | ➔ Page/Internet |
| [1] | Rod eye<br>SGS | With spherical bearing | 22 |
| [2] | Foot mounting<br>HNC | For mounting the drive on the bearing and end caps | 21 |
| [3] | Flange mounting<br>FNC | For mounting the drive on the bearing and end caps | 21 |
| [4] | Guide unit[1)]<br>FENG-KF | For protecting against rotation at high torque loads | 19 |
| [5] | Trunnion support<br>LNZG | For securing the trunnion flange kit DAMT | 23 |
| [6] | Trunnion flange kit<br>DAMT | For swivelling movements of the drive | 22 |
| [7] | Slot cover<br>ABP-5-S | For protection against contamination | 23 |
| [8] | Proximity sensor<br>SME/SMT-8 | For additional sensing of the piston position, can be ordered optionally, only in conjunction with the order code A in the drive's modular product section | sm |
| [9] | Sensor interface<br>CASM | Used to connect pneumatic drives with analogue/incremental displacement encoder to a position controller CPX-CMAX or CPX-CMPX | casm |
| [10] | Push-in fitting<br>QS | For connecting tubing with standard O.D. | qs |

1) Guide unit FENG-KF must be attached to the piston rod in a way that eliminates backlash

**Note**

Allocation table of drives and associated proportional directional control valves

➔ page 24

# Data sheet

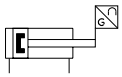

www.festo.com

- Diameter
  80 and 100 mm
- Stroke length
  10 ... 2000 mm

| General technical data | | | |
|---|---|---|---|
| Piston diameter | | 80 | 100 |
| Based on standard | | ISO 15552 | |
| Design | | Piston | |
| | | Piston rod | |
| | | Profile barrel | |
| Mode of operation | | Double-acting | |
| Guide[1] | | Guide rod with yoke, with ball bearing guide | |
| Protection against rotation | | Square piston rod | |
| Mounting position | | Any | |
| Type of mounting | | Via accessories | |
| Cushioning | | Elastic cushioning rings/pads at both ends | |
| Position sensing | | Integrated displacement encoder | |
| | | Via proximity sensor[2] | |
| Measuring principle (displacement encoder) | | Encoder, contactless and relative measurement | |
| Pneumatic connection | | G3/8 | G1/2 |
| Stroke | | | |
| DDPC-...[3] | [mm] | 10 ... 2000 | |
| DDPC-...-D | [mm] | 100 ... 500 | |
| Extended piston rod | [mm] | 1 ... 500 | |

1) Guide unit FENG-KF can be ordered via the modular product system (feature D) and is supplied attached. The maximum stroke is restricted.
2) Not included in the scope of delivery, can be ordered as an option
3) Can only be used as a positioning drive without restriction in the range from 100 ... 750 mm.
Note stroke reduction in combination with CPX-CMAX

| Operating and environmental conditions | | |
|---|---|---|
| Operating pressure | [bar] | 4 ... 12 |
| Operating pressure[1] | [bar] | 4 ... 8 |
| Operating medium[2] | | Compressed air to ISO 8573-1:2010 [6:4:4] |
| Note on the operating/pilot medium | | Operation with lubricated medium not possible<br>Pressure dew point 10°C below ambient/medium temperature |
| Ambient temperature[3] | [°C] | –20 ... +80 |
| Vibration resistance to DIN/IEC 68 Part 2-6 | | Severity level 2 |
| Continuous shock resistance toDIN/IEC 68 part 2-82 | | Severity level 2 |
| CE marking (see declaration of conformity)[4] | | To EU EMC Directive |
| Corrosion resistance CRC[5] | | 1 |

1) Only applies to applications with the end position controller CPX-CMPX, SPC11 and axis controller CPX-CMAX
2) The proportional directional control valve VPWP, MPYE used requires these characteristic values
3) Note operating range of proximity sensors
4) For information about the area of use, see the EC declaration of conformity at: www.festo.com/sp → Certificates.
If the devices are subject to usage restrictions in residential, commercial or light-industrial environments, further measures for the reduction of the emitted interference may be necessary.
5) Corrosion resistance class CRC 1 to Festo standard FN 940070
Low corrosion stress. Dry indoor application or transport and storage protection. Also applies to parts behind coverings, in the non-visible interior area, and parts which are covered in the application (e.g. drive trunnions).

# Data sheet

| **Forces [N] and impact energy [Nm]** | | |
|---|---|---|
| Piston diameter | 80 | 100 |
| Theoretical force at 6 bar, advancing | 3016 | 4712 |
| Theoretical force at 6 bar, retracting | 2721 | 4418 |
| Impact energy at the end positions | 1.8 | 2.5 |

Permissible impact velocity: $$v = \sqrt{\frac{2 \cdot E}{m_1 + m_2}}$$

Maximum permissible mass: $$m_2 = \frac{2 \cdot E}{v^2} - m_1$$

| | |
|---|---|
| V | Perm. impact velocity |
| E | Max. impact energy |
| m1 | Moving mass (drive) |
| m2 | Moving payload |

| **Positioning characteristics with axis controller CPX-CMAX** | | | |
|---|---|---|---|
| Piston diameter | | 80 | 100 |
| Stroke | [mm] | 100 … 750 | |
| Mounting position | | Any | |
| Resolution | [mm] | 0.01 | |
| Repetition accuracy | [mm] | ≤ ±0.5 | |
| Minimum load, horizontal | [kg] | 20 | 32 |
| Maximum load, horizontal | [kg] | 300 | 450 |
| Minimum load, vertical[1)] | [kg] | 20 | 32 |
| Maximum load, vertical[1)] | [kg] | 100 | 150 |
| Min. travel speed | [m/s] | 0.05 | |
| Max. travel speed | [m/s] | 1 | 0.7 |
| Typical positioning time, long stroke[2)] | [s] | 0.8 8/1.02 | 0.9 5/1.10 |
| Typical positioning time, short stroke[3)] | [s] | 0.7 7/0.95 | 0.8 0/1.32 |
| Minimum positioning stroke[4)] | [%] | ≤ 3 | |
| Stroke reduction[5)] | [mm] | 15 | |
| **Recommended proportional directional control valve** | | | |
| For CPX-CMAX | | → Page 24 | |

1) Only in combination with external guide
2) At 6 bar, horizontal mounting position, DDPC-XX-500, 400 mm positioning travel at min./max. load
3) At 6 bar, horizontal mounting position, DDPC-XX-500, 200 mm positioning travel at min./max. load
4) Based on the cylinder stroke, but not more than 10 mm
5) The stroke reduction must be maintained on each side of the drive, the max. stroke for variable positioning is thus: stroke – 2x stroke reduction

| **Force control characteristics with axis controller CPX-CMAX** | | | |
|---|---|---|---|
| Piston diameter | | 80 | 100 |
| Stroke | [mm] | 100 … 750 | |
| Mounting position | | Any | |
| Maximum controllable force[1)] | [N] | 2710/2440 | 4240/3975 |
| Typical friction forces[2)] | [N] | 140 | 160 |
| Repetition accuracy of pressure control[3)4)] | [%] | < ±2 | |

1) Advancing/retracting at 6 bar
2) These values can fluctuate greatly from cylinder to cylinder and are not guaranteed.
These friction forces must also be taken into consideration when using an external guide or when the cylinder is moving other components subject to friction
3) This value defines the repetition accuracy with which the internal differential pressure in the cylinder, which corresponds to the prescribed force setpoint value, is controlled and relates to the maximum controllable force
4) The effective force at the workpiece and its accuracy depend largely on the friction in the system as well as the repetition accuracy of the internal control system. Note that friction forces always work against the direction of movement of the piston. The following formula can be used as a rule of thumb to approximate the force F at the workpiece:
$F = F_{setpoint} \pm F_{friction\ forces} \pm$ repetition accuracy of pressure control

# Data sheet

| Positioning characteristics with Soft Stop end position controller CPX-CMPX, SPC11 | | | |
|---|---|---|---|
| Piston diameter | | 80 | 100 |
| Stroke | [mm] | 100 … 500 | |
| Mounting position | | Any | |
| Repetition accuracy[1] | [mm] | ±2 | |
| Minimum load, horizontal | [kg] | 20 | 32 |
| Maximum load, horizontal | [kg] | 300 | 450 |
| Minimum load, vertical[2] | [kg] | 20 | 32 |
| Maximum load, vertical[2] | [kg] | 100 | 150 |
| Travel time | [s] | → Soft Stop engineering software: → www.festo.com | |
| **Recommended proportional directional control valve** | | | |
| For CPX-CMPX | | → Page 24 | |
| For SPC11 | | → Page 24 | |

1) One intermediate position. The accuracy in the end positions depends solely on the mechanical stability of the end stops
2) Only in combination with an external guide

| Electrical data – Displacement encoder | | |
|---|---|---|
| Output signal | | Analogue |
| Linearity error | | |
| Strokes up to 500 mm | [mm] | < ±0.08 |
| Strokes up to 1000 mm | [mm] | < ±0.09 |
| Strokes above 1000 mm | [mm] | < ±0.11 |
| Max. travel speed | [m/s] | 1.5 |
| Degree of protection | | IP65 |
| CE marking (see declaration of conformity) | | To EU EMC Directive[1] |
| Maximum permitted magnetic interference field[2] | [kA/m] | 10 |
| Electrical connection | | Cable with 8-pin plug, round design, M12 |
| Cable length | [m] | 1.5 |

1) For information about the area of use, see the EC declaration of conformity at: www.festo.com/sp → Certificates.
If the devices are subject to usage restrictions in residential, commercial or light-industrial environments, further measures for the reduction of the emitted interference may be necessary.
2) At a distance of 100 mm

## Pin allocation for plug

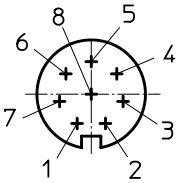


| Pin | |
|---|---|
| 1 | + Ub sensor |
| 2 | 0 V |
| 3 | Signal sine + |
| 4 | Signal sine – |
| 5 | Signal cosine – |
| 6 | Signal cosine + |
| 7 | Shielding |
| 8 | – |
| Housing | Earth terminal (FE) |

# Data sheet

| **Weight [g]** | | |
|---|---|---|
| Piston diameter | 80 | 100 |
| **DDPC-...** | | |
| Basic weight with 0 mm stroke | 3053 | 4330 |
| Additional weight per 10 mm stroke | 87 | 95 |
| Moving mass with 0 mm stroke | 804 | 994 |
| Additional weight per 10 mm stroke | 31 | 31 |
| **DDPC-...-T – Through piston rod** | | |
| Basic weight with 0 mm stroke | 3537 | 5019 |
| Additional weight per 10 mm stroke | 127 | 134 |
| Moving mass with 0 mm stroke | 1247 | 1467 |
| Additional weight per 10 mm stroke | 70 | 70 |
| **DDPC-...-...E – Additional weight with piston rod extension** | | |
| Additional weight per 10 mm extension | 31 | 31 |
| **DDPC-...-C – Additional weight with clamping unit** | | |
| Additional weight | 2046 | 2829 |
| **DDPC-...-D – Additional weight with guide unit** | | |
| Basic weight with 0 mm stroke | 10430 | 12990 |
| Additional weight per 10 mm stroke | 80 | 80 |

## Materials

Sectional view

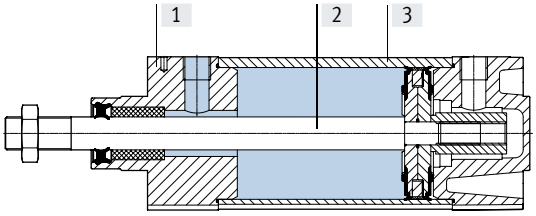


| Standards-based cylinder | | |
|---|---|---|
| [1] | Cover | Wrought aluminium alloy |
| [2] | Piston rod | High-alloy steel |
| [3] | Cylinder barrel | Wrought aluminium alloy |
| – | Seals | NBR, polyurethane |
| | Note on materials | Free of copper and PTFE |
| | | RoHS-compliant |

# Data sheet

## Torques and lateral forces

Max. torque for protection against rotation:
dynamic ≤ 3 Nm
static ≤ 5 Nm
An external guide unit FENG-KF is recommended with higher torque loads. The guide unit is supplied attached.
The permissible static and dynamic characteristic load values with and without attached guide
➔ Internet: feng

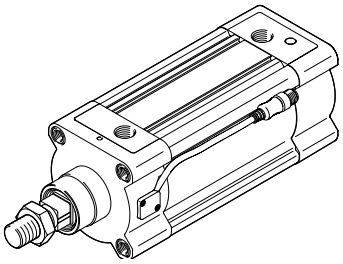

## Mounting conditions

When mounting a drive A with magnet (for position sensing) next to a standard cylinder DDPC, the following conditions must be observed:

X Minimum distance between the drives
Y Offset between the drives on the bearing cap

### Parallel assembly

The drives can be mounted directly next to one another if the offset Y = 0 mm.

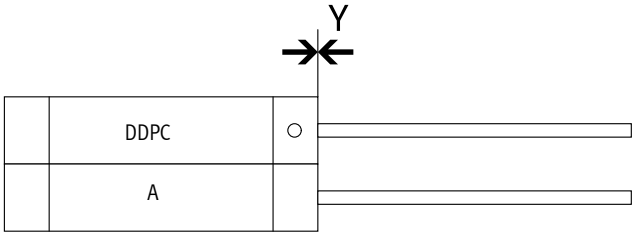


### Offset mounting, cable outlet between the drives

If the offset Y › 0 mm and the cable outlet is between the drives, a distance of X › 70 mm must be observed.

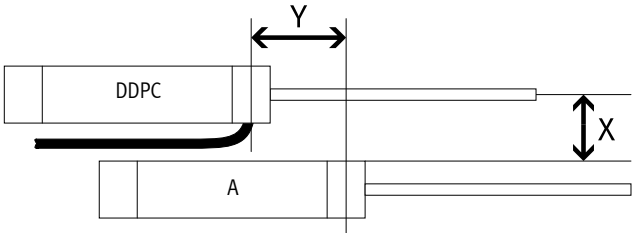


### Off-set mounting, cable outlet upwards or downwards

If the offset Y › 0 mm and the cable outlet points up or down, a distance of X › 60 mm must be observed.

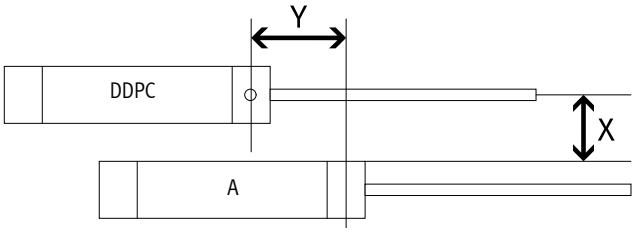

# Data sheet

**Dimensions** Download CAD data ➔ www.festo.com

DDPC-...

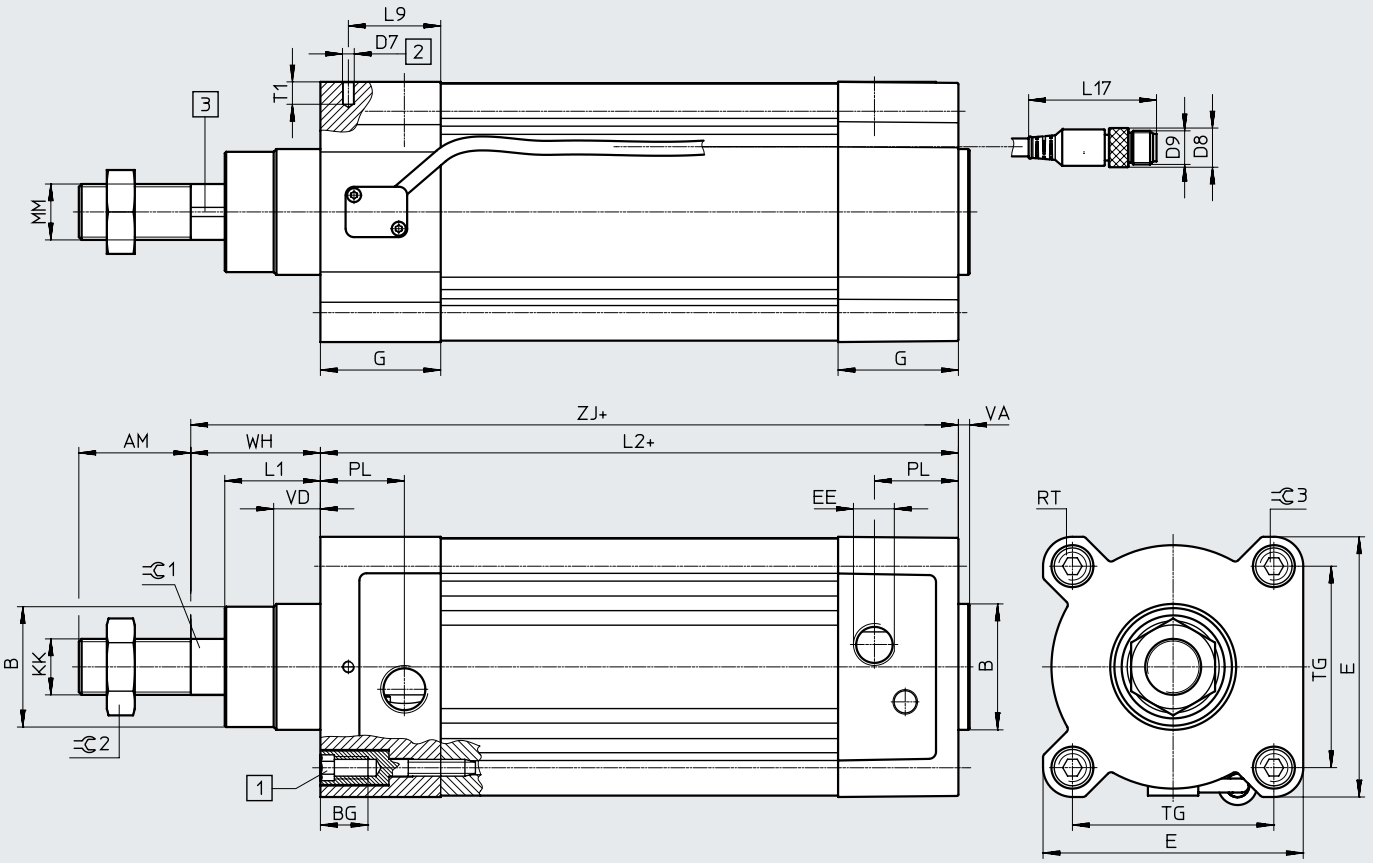


[1] Socket head screw with female thread for mounting attachments
[2] Drilled hole for securing the earthing for self-tapping M4 screw to DIN 7500
[3] Magnetic measuring band
+ = plus stroke length
++ = plus 2x stroke length

| ø [mm] | AM | B ø d11 | BG | D7 ø | D8 ø | D9 | E | EE | G |
|---|---|---|---|---|---|---|---|---|---|
| 80 | 40 | 45 | 17 | 3.7 | 14 | M12 | 93 | G3/8 | 43 |
| 100 | 40 | 55 | 17 | 3.7 | 14 | M12 | 110 | G1/2 | 48 |

| ø [mm] | KK | L1 | L2 | L9 | L17 | MM ø | PL | RT | T1 |
|---|---|---|---|---|---|---|---|---|---|
| 80 | M20x1.5 | 34.2 | 128 | 20 | 45.7 | 20 | 30 | M10 | 8 |
| 100 | M20x1.5 | 38 | 138 | 21.5 | 45.7 | 20 | 31.5 | M10 | 8 |

| ø [mm] | TG | VA | VD | WH | ZJ | 1 | 2 | 3 |
|---|---|---|---|---|---|---|---|---|
| 80 | 72 | 4 | 16.7 | 46 | 174 | 22 | 30 | 6 |
| 100 | 89 | 4 | 20.5 | 51 | 189 | 22 | 30 | 6 |

# Data sheet

**Dimensions** Download CAD data ➔ www.festo.com

DDPC-...-T – Through piston rod

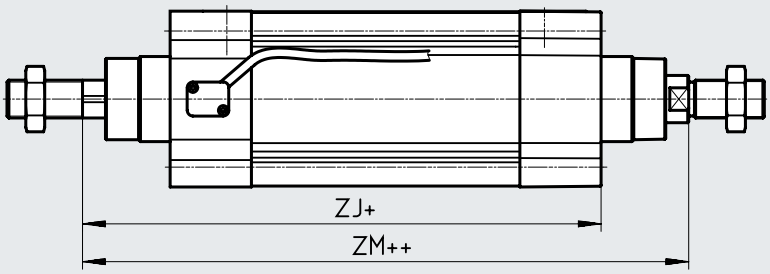


\+ = plus stroke length
++ = plus 2x stroke length

DDPC-...-CT – Through piston rod with clamping unit

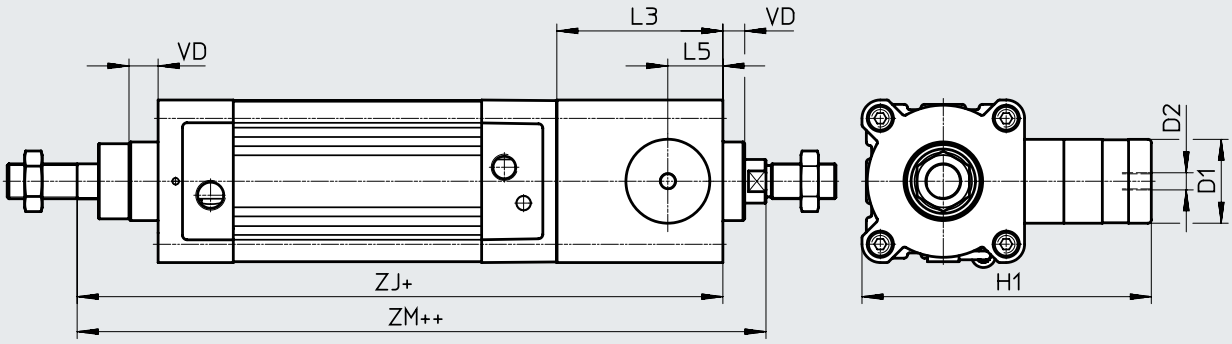


\+ = plus stroke length
++ = plus 2x stroke length

DDPC-...-...E – Extended piston rod

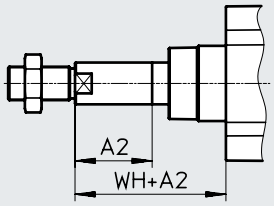


| ø [mm] | A2 max. | D1 ø f9 | D2 | H1 | L3 | L5 |
|---|---|---|---|---|---|---|
| 80 | 500 | 48 | G1/8 | 165.5 | 95 | 31.5 |
| 100 | 500 | 48 | G1/8 | 174 | 98 | 31 |

| ø [mm] | VD | WH | ZJ | | ZM | |
|---|---|---|---|---|---|---|
| | | | DDPC-...-T | DDPC-...-CT | DDPC-...-T | DDPC-...-CT |
| 80 | 16.7 | 46 | 174 | 269 | 222 | 317 |
| 100 | 20.5 | 51 | 189 | 287 | 240 | 338 |

# Data sheet

**Dimensions** Download CAD data ➔ www.festo.com

DDPC-...-D

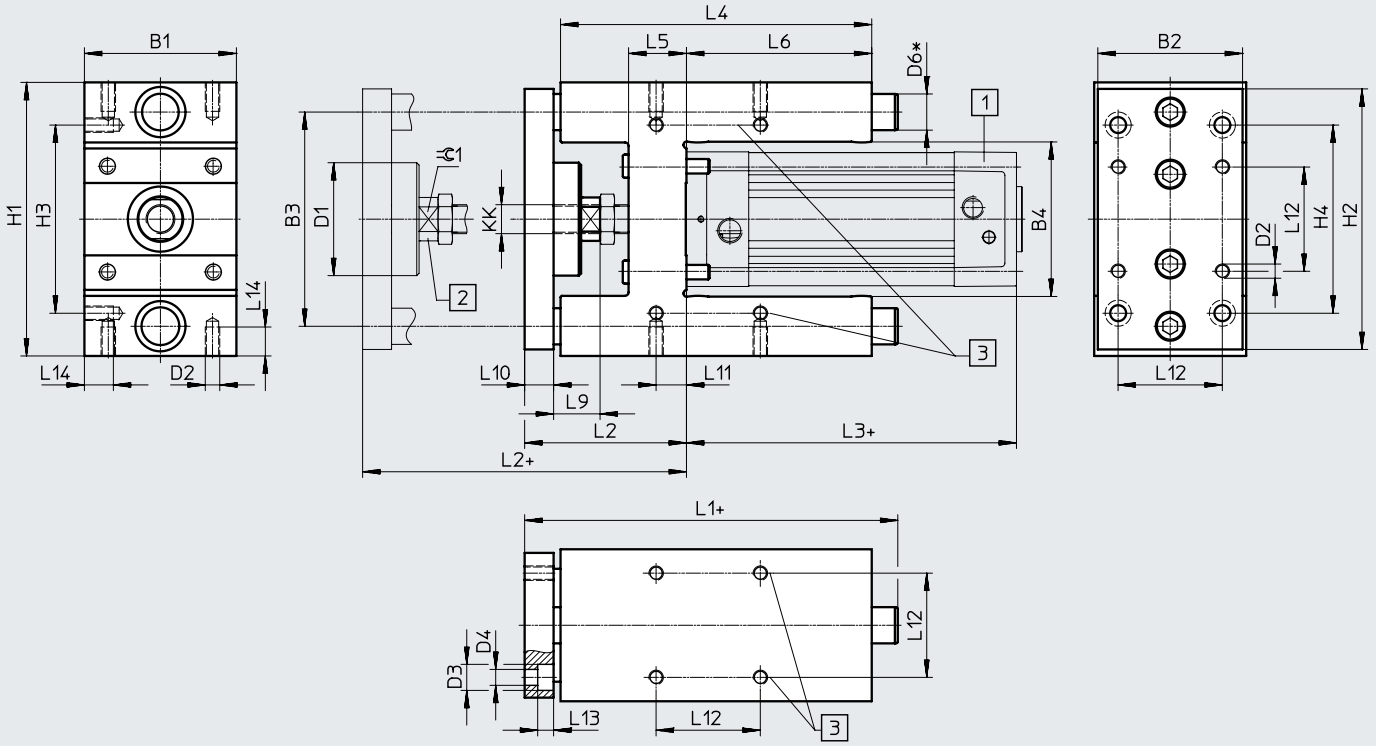


[1] Standards-based cylinder DDPC
[2] Compensating coupling
[3] Customers can drill additional mounting holes here as required
+ = plus stroke length

| ø [mm] | B1 −0.3 | B2 | B3 ±0.2 | B4 ±0.6 | D1 ø | D2 | D3 ø | D4 ø | D6 ø h6 |
|---|---|---|---|---|---|---|---|---|---|
| 80 | 105 | 100 | 148 | 106 | 78 | M10 | 18 | 11 | 25 |
| 100 | 130 | 120 | 172 | 131 | 78 | M10 | 18 | 11 | 25 |

| ø [mm] | H1 −0.5 | H2 | H3 ±0.2 | H4 ±0.2 | KK | L1 | L2 +10 | L3 | L4 |
|---|---|---|---|---|---|---|---|---|---|
| 80 | 189 | 180 | 130 | 130 | M20x1.5 | 258 | 111 | 194 | 215 |
| 100 | 213 | 200 | 150 | 150 | M20x1.5 | 263 | 116 | 138 | 220 |

| ø [mm] | L5 | L6 | L9 | L10 | L11 | L12 ±0.2 | L13 | L14 | ⌯ 1 |
|---|---|---|---|---|---|---|---|---|---|
| 80 | 40 | 128 | 32 | 20 | 21 | 72 | 11 | 20 | 27 |
| 100 | 40 | 128 | 32 | 20 | 24.5 | 89 | 11 | 20 | 27 |

# Ordering data – Modular product system

| **Ordering table** | | | | | | | |
|---|---|---|---|---|---|---|---|
| Piston diameter | | 80 | 100 | Conditions | Code | | Enter code |
| Module no. | | **1677705** | **1691433** | | | | |
| Function | | Standards-based cylinder with integrated displacement encoder | | | **DDPC** | | DDPC |
| Protection against rotation | | With protection against rotation | | | **-Q** | | |
| | | With guide unit | | | **-D** | | |
| Piston diameter | [mm] | 80 | 100 | | **-...** | | |
| Stroke | [mm] | 10 ... 2000 | | [1] | **-...** | | |
| Clamping unit | | None | | | | | |
| | | Attached | | [2] | **-C** | | |
| Piston rod | | At one end | | | | | |
| | | Through piston rod | | | **T** | | |
| Cushioning | | Elastic cushioning rings/pads at both ends | | | **-P** | | -P |
| Stroke | [mm] | 10 ... 2000 | | [1] | **-...** | | |
| Stroke | [mm] | 10 ... 2000 | | | **-...** | | |
| Position sensing | | Via proximity sensor | | | **A** | | A |
| Piston rod extension | | None | | | | | |
| | [mm] | 1 ... 500 | | | **-...E** | | |

[1] Stroke Can only be used as a positioning drive without restriction in the range from 100 ... 500 mm.
[1] –... Can only be used as a positioning drive without restriction in the range from 100 ... 750 mm
[2] C Only available with T

# Accessories

**Foot mounting HNC**

Material:
Galvanised steel
Free of copper and PTFE

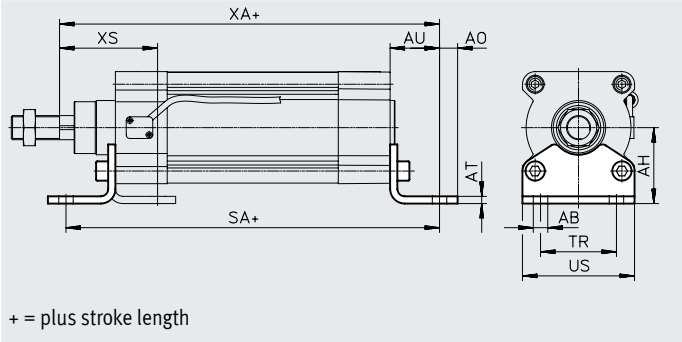


**Dimensions and ordering data**

| For ⌀ [mm] | AB ⌀ | AH | AO | AT | AU | SA DDPC-... | SA DDPC-...-C |
|---|---|---|---|---|---|---|---|
| 80 | 12 | 63 | 15 | 6 | 41 | 276 | 371 |
| 100 | 14.5 | 71 | 17.5 | 6 | 41 | 220 | 318 |

| For ⌀ [mm] | TR | US | XA DDPC-... | XA DDPC-...-C | XS | CRC[1] | Weight [g] | Part no. | Type |
|---|---|---|---|---|---|---|---|---|---|
| 80 | 63 | 93 | 281 | 376 | 81 | 2 | 829 | **174373** | **HNC-80** |
| 100 | 75 | 110 | 230 | 328 | 86 | 2 | 1009 | **174374** | **HNC-100** |

1) Corrosion resistance class CRC 2 to Festo standard FN 940070
Moderate corrosion stress. Indoor applications in which condensation can occur. External visible parts with primarily decorative surface requirements which are in direct contact with a normal industrial environment.

**Flange mounting FNC**

Material:
FNC: Galvanised steel
Free of copper and PTFE
RoHS-compliant

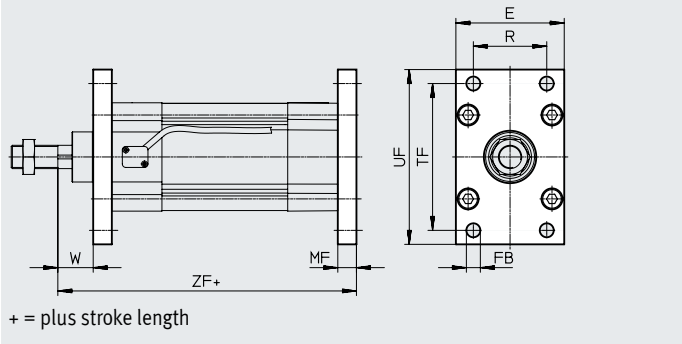


**Dimensions and ordering data**

| For ⌀ [mm] | E | FB ⌀ H13 | MF | R | TF | UF | W | ZF DDPC-... | ZF DDPC-...-C | CRC[1] | Weight [g] | Part no. | Type |
|---|---|---|---|---|---|---|---|---|---|---|---|---|---|
| 80 | 93 | 12 | 16 | 63 | 126 | 150 | 30 | 256 | 351 | 1 | 1495 | **174380** | **FNC-80** |
| 100 | 110 | 14 | 16 | 75 | 150 | 175 | 35 | 205 | 303 | 1 | 2041 | **174381** | **FNC-100** |

1) Corrosion resistance class CRC 1 to Festo standard FN 940070
Low corrosion stress. Dry indoor application or transport and storage protection. Also applies to parts behind coverings, in the non-visible interior area, and parts which are covered in the application (e.g. drive trunnions).

# Accessories

**Rod eye SGS**

Scope of delivery:
1 rod eye, 1 hex nut to DIN 439

Material:
Galvanised steel
RoHS-compliant

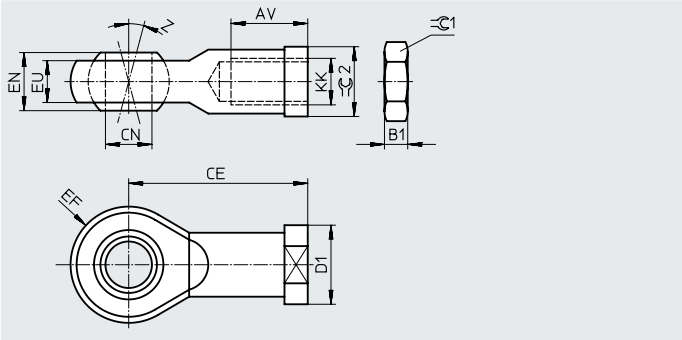


**Dimensions and ordering data**

| For Ø [mm] | AV | B1 | CE | CN Ø H7 | D1 Ø | EF ±0.5 | EN | EU | Z [°] | C1 | C2 | CRC[1) 2)] | Weight [g] | Part no. | Type |
|---|---|---|---|---|---|---|---|---|---|---|---|---|---|---|---|
| M20x1.5 | 33 –2 | 10 | 77 | 20 | 34 | 25 | 25 | 18 | 15 | 30 | 30 | 1 | 464 | **9264** | **SGS-M20x1.5** |

1) Corrosion resistance class CRC 1 to Festo standard FN 940070
Low corrosion stress. Dry indoor application or transport and storage protection. Also applies to parts behind coverings, in the non-visible interior area, and parts which are covered in the application (e.g. drive trunnions).
2) In the area of the ball classified as:
Corrosion resistance class CRC 0 to Festo standard FN 940070
No corrosion stress. Applies to small, visually unimportant standard parts such as threaded pins, circlips and clamping sleeves which are usually only available on the market in a phosphated or burnished version (and possibly oiled) as well as to ball bearings (for components < CRC 3) and plain bearings.

**Trunnion flange kit DAMT**

The kit can be attached at any position along the profile barrel of the cylinder.

Material:
Galvanised steel
Free of copper and PTFE
RoHS-compliant

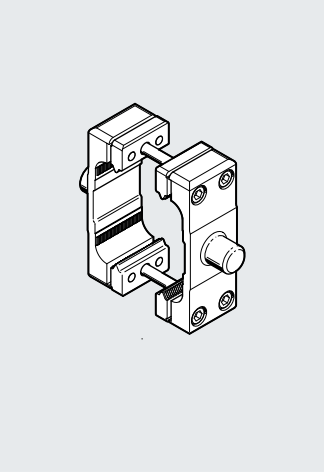

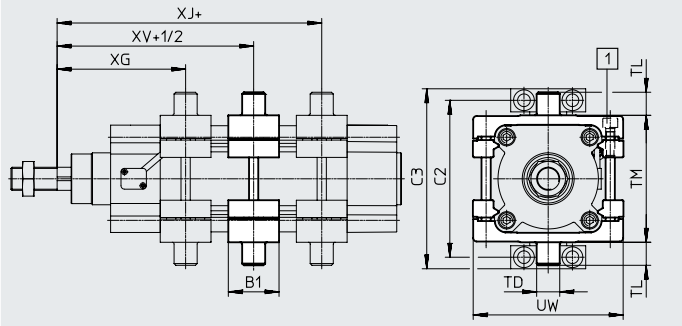


\+ = plus stroke length
+½ = plus half stroke length
[1] Max. tightening torque

**Dimensions and ordering data**

| For Ø [mm] | B1 | C2 | C3 | TD Ø e9 | TL | TM | UW | XG DDPC-... | XG DDPC-...-C |
|---|---|---|---|---|---|---|---|---|---|
| 80 | 44 | 136 | 156 | 20 | 20 | 110 | 130 | 111 | 206 |
| 100 | 48 | 164 | 189 | 25 | 25 | 132 | 145 | 123 | 221 |

| For Ø [mm] | XJ DDPC-... | XJ DDPC-...-C | XV DDPC-... | XV DDPC-...-C | Max. tightening torque [Nm] | CRC[1)] | Weight [g] | Part no. | Type |
|---|---|---|---|---|---|---|---|---|---|
| 80 | 175 | 270 | 143 | 238 | 28+2 | 1 | 1494 | **163529** | **DAMT-V1-80-A** |
| 100 | 117 | 215 | 120 | 218 | 28+2 | 1 | 2095 | **163530** | **DAMT-V1-100-A** |

1) Corrosion resistance class CRC 1 to Festo standard FN 940070
Low corrosion stress. Dry indoor application or transport and storage protection. Also applies to parts behind coverings, in the non-visible interior area, and parts which are covered in the application (e.g. drive trunnions).

# Accessories

**Trunnion support LNZG**

Material:
Trunnion support: Anodised aluminium
Plain bearing: Plastic
Free of copper and PTFE
RoHS-compliant

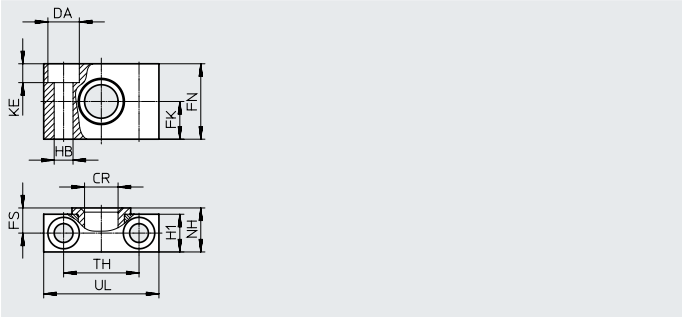


**Dimensions and ordering data**

| For Ø [mm] | CR Ø D11 | DA Ø H13 | FK Ø ±0.1 | FN | FS | H1 | HB Ø H13 | KE | NH | TH ±0.2 | UL | CRC[1] | Weight [g] | Part no. | Type |
|---|---|---|---|---|---|---|---|---|---|---|---|---|---|---|---|
| 80 | 20 | 18 | 20 | 40 | 13 | 20 | 11 | 11 | 23 | 42 | 65 | 2 | 178 | **32961** | **LNZG-63/80** |
| 100 | 25 | 20 | 25 | 50 | 16 | 24.5 | 14 | 13 | 28.5 | 50 | 75 | 2 | 306 | **32962** | **LNZG-100/125** |

1) Corrosion resistance class 2 to Festo standard 940070
Components subject to moderate corrosion stress. External visible parts with primarily decorative surface requirements which are in direct contact with a normal industrial environment or media such as coolants or lubricating agents.

**Ordering data**

| | For Ø | Comment | Part no. | Type | PU[1] |
|---|---|---|---|---|---|
| **Slot cover** | | | | Data sheets ➔ Internet: abp | |
|  | 80, 100 | Each 0.5 m | **151680** | **ABP-5-S** | 2 |

1) Packaging unit

**Note**
Recommended proximity sensor
➔ Internet: dsbc

# Accessories

**Ordering data – Proportional directional control valves and push-in fittings**

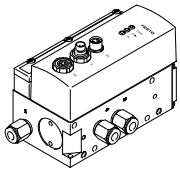

| For Ø [mm] | Stroke [mm] | Proportional directional control valve, Data sheets ➔ Internet: vpwp, Part no. | Type | Push-in fitting for DDPC, Data sheets ➔ Internet: qs, Part no. | Type | PU[1] |
|---|---|---|---|---|---|---|
| **For applications with axis controller CPX-CMAX** | | | | | | |
| 80 | 100 … 200 | **550171** | **VPWP-6-L-5-Q8-10-E-…** | **186100** | **QS-G3/8-8** | 10 |
| | 201 … 450 | **550172** | **VPWP-8-L-5-Q10-10-E-…** | **186102** | **QS-G3/8-10** | |
| | 451 … 750 | **1552544** | **VPWP-10-L-5-Q-10-E-G-EX1** | **186103** | **QS-G3/8-12** | |
| 100 | 100 … 120 | **550171** | **VPWP-6-L-5-Q8-10-E-…** | **186104** | **QS-G1/2-12[2]** | 1 |
| | 121 … 330 | **550172** | **VPWP-8-L-5-Q10-10-E-…** | **186104** | **QS-G1/2-12[3]** | |
| | 331 … 750 | **1552544** | **VPWP-10-L-5-Q-10-E-G-EX1** | **186104** | **QS-G1/2-12** | |

1) Packaging unit
2) With additional reduction from Ø 12 to Ø 8, with push-in connector QS-12H-8 (part number 130624)
3) With additional reduction from Ø 12 to Ø 10, with push-in connector QS-12H-10 (part number 153044)

**Ordering data – Proportional directional control valves and push-in fittings**

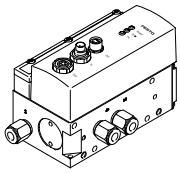

| For Ø [mm] | Stroke [mm] | Proportional directional control valve, Data sheets ➔ Internet: vpwp, Part no. | Type | Push-in fitting for DDPC, Data sheets ➔ Internet: qs, Part no. | Type | PU[1] |
|---|---|---|---|---|---|---|
| **For applications with Soft Stop end position controller CPX-CMPX** | | | | | | |
| 80 | 100 … 125 | **550170** | **VPWP-4-L-5-Q8-10-E-…** | **186100** | **QS-G3/8-8** | 10 |
| | 126 … 160 | **550171** | **VPWP-6-L-5-Q8-10-E-…** | **186100** | **QS-G3/8-8** | |
| | 161 … 400 | **550172** | **VPWP-8-L-5-Q10-10-E-…** | **186102** | **QS-G3/8-10** | |
| | 401 … 500 | **1552544** | **VPWP-10-L-5-Q-10-E-G-EX1** | **186103** | **QS-G3/8-12** | |
| 100 | 100 … 150 | **550171** | **VPWP-6-L-5-Q8-10-E-…** | **186104** | **QS-G1/2-12[2]** | 1 |
| | 151 … 350 | **550172** | **VPWP-8-L-5-Q10-10-E-…** | **186104** | **QS-G1/2-12[3]** | |
| | 351 … 500 | **1552544** | **VPWP-10-L-5-Q-10-E-G-EX1** | **186104** | **QS-G1/2-12** | |

1) Packaging unit
2) With additional reduction from Ø 12 to Ø 8, with push-in connector QS-12H-8 (part number 130624)
3) With additional reduction from Ø 12 to Ø 10, with push-in connector QS-12H-10 (part number 153044)

**Ordering data – Proportional directional control valves and push-in fittings**

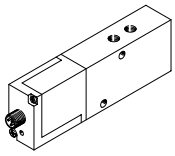

| For Ø [mm] | Stroke [mm] | Proportional directional control valve, Data sheets ➔ Internet: mpye, Part no. | Type | Push-in fitting for DDPC, Data sheets ➔ Internet: qs, Part no. | Type | PU[1] |
|---|---|---|---|---|---|---|
| **For applications with Soft Stop end position controller SPC11** | | | | | | |
| 80 | 100 … 125 | **151692** | **MPYE-5-1/8-LF-010-B** | **186100** | **QS-G3/8-8** | 10 |
| | 126 … 160 | **151693** | **MPYE-5-1/8-HF-010-B** | **186100** | **QS-G3/8-8** | |
| | 161 … 400 | **151694** | **MPYE-5-1/4-010-B** | **186102** | **QS-G3/8-10** | |
| | 401 … 500 | **151695** | **MPYE-5-3/8-010-B** | **186103** | **QS-G3/8-12** | |
| 100 | 100 … 150 | **151693** | **MPYE-5-1/8-HF-010-B** | **186104** | **QS-G1/2-12[2]** | 1 |
| | 151 … 350 | **151694** | **MPYE-5-1/4-010-B** | **186104** | **QS-G1/2-12[3]** | |
| | 351 … 500 | **151695** | **MPYE-5-3/8-010-B** | **186104** | **QS-G1/2-12** | |

1) Packaging unit
2) With additional reduction from Ø 12 to Ø 8, with push-in connector QS-12H-8 (part number 130624)
3) With additional reduction from Ø 12 to Ø 10, with push-in connector QS-12H-10 (part number 153044)