Valve manifolds type 44 VTSA, ISO 15407-2/ISO 5599-2

FESTO

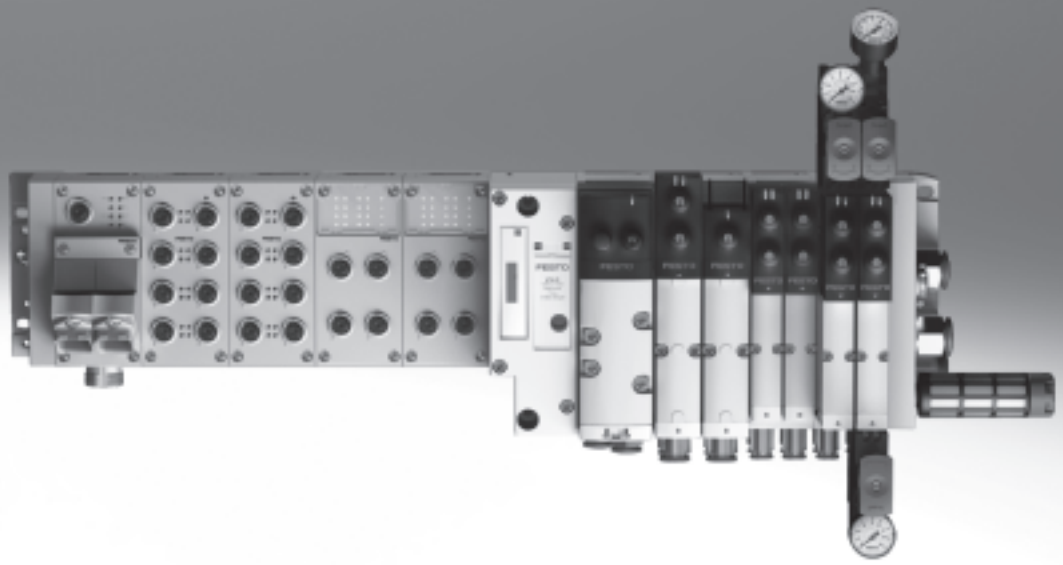

Valve manifolds type 44 VTSA, ISO 15407-2/ISO 5599-2

Key features

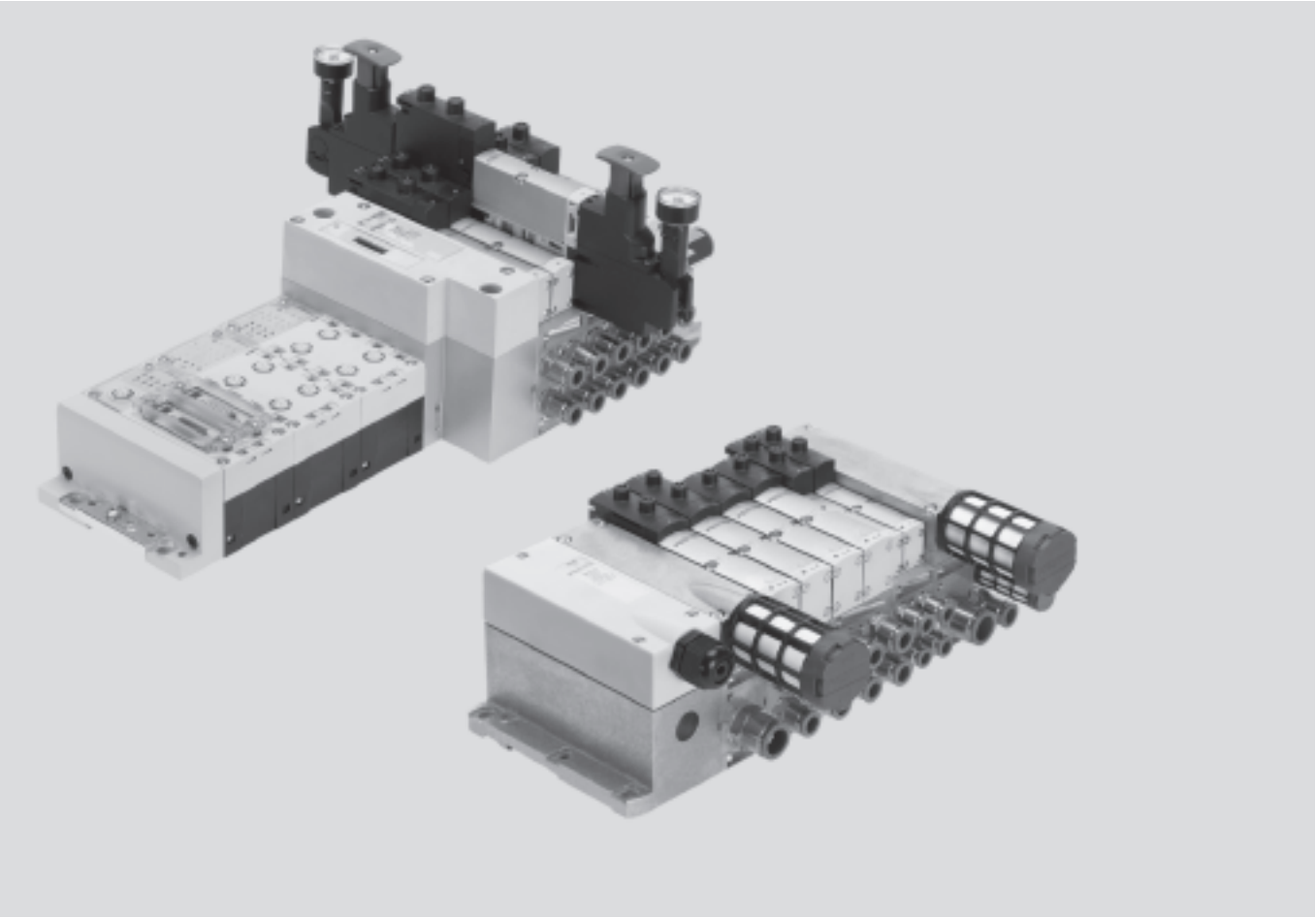

Innovative

- High-performance valves in sturdy metal housing
- Standardized from the multi-pin plug connection to the fieldbus connection and control block
- Dream team: fieldbus valve manifold suitable for CPX electrical peripherals. This means:
  - Forward-looking internal communication system for controlling the valves and CPX modules

Versatile

- Modular system offering a range of configuration options
- Expandable up to 32 solenoid coils
- Conversions and extensions are possible at any time
- Manifold sub-bases can be extended using four screws, sturdy duct separation on metal substrate
- Integration of innovative function modules possible
- Supply plates enable a flexible air supply and variable pressure zones
- Reverse operation
- Wide pressure range –0.9 ... 10 bar
- Wide range of valve functions
- Valve supply: 24 V DC or 110 V AC

Reliable

- Sturdy and durable metal components
  - Valves
  - Manifold sub-bases
  - Seals
- Fast troubleshooting thanks to LEDs on the valves and diagnostics via fieldbus
- Reliability of service thanks to valves that can be replaced easily and quickly
- Manual override either non-detenting, non-detenting/detenting or with cover
- Durable, thanks to tried and tested spool valves
- Large and durable labelling system
- 100% duty cycle

Easy to assemble

- Tested and ready to install unit
- Lower selection, ordering, installation and commissioning costs
- Secure mounting on wall or H-rail

Valve manifolds type 44 VTSA, ISO 15407-2/ISO 5599-2

Key features

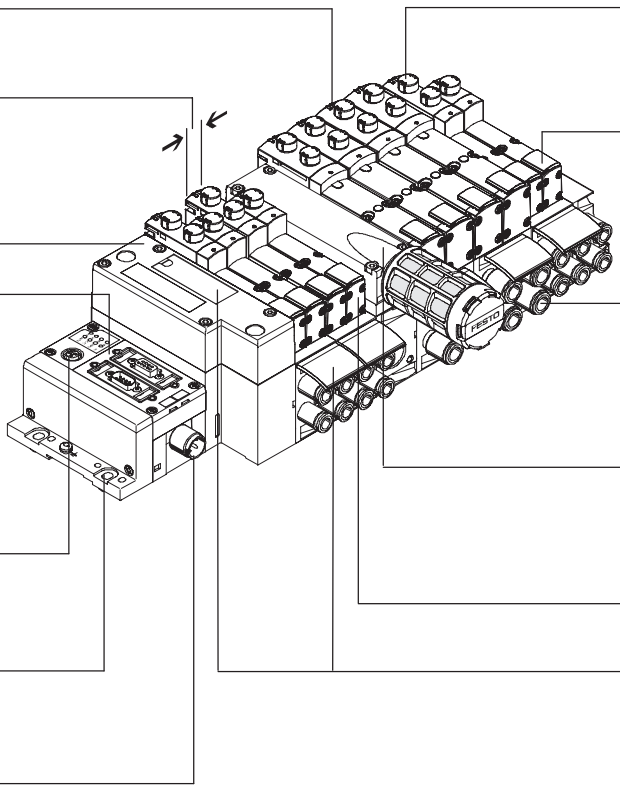

Reduced downtimes:
On-the-spot diagnostics via LEDs

Width 18 mm, 26 mm and 42 mm can be combined on a single terminal without adapter

Pneumatic interface to CPX

Simple electrical connections
- Fieldbus connection via CPX
- Multi-pin plug connection with pre-assembled cable or terminal strip (Cage Clamp®)
- Control block via CPX
- AS-interface
- Individual connection

CPX diagnostic interface for handheld devices (channel-oriented diagnostics down to the individual valve)

Quick mounting:
Direct mounting using screws or H-rail

Safe:
Valves, outputs and logic voltage can be switched off separately

Reliable operation:
Manual override:
non-detenting/detenting or covered

Flexible:
- 32 valve positions/32 solenoid coils
- One valve series for a wide range of flow rates

Functional:
Large ports, flow-optimised ducts, sturdy metal thread or pre-assembled QS fittings

Modular:
Supply plates facilitate the creation of multiple pressure zones as well as numerous additional exhaust and supply ports

Comprehensive range of valve functions

Practical:
Large inscription labels

Equipment options

Valve functions

- 5/2-way valve
  - Single solenoid, pneumatic spring/mechanical spring
  - Double solenoid
  - Double solenoid with dominant signal
- 2x 3/2-way valve, single solenoid
  - Normally open
  - Normally open, reversible
  - Normally closed
  - Normally closed, reversible
- 2x 3/2-way valve, single solenoid
  - 1x normally open, 1x normally closed
  - 1x normally open, 1x normally closed, reversible
- 5/3-way valve
  - Mid-position pressurised
  - Mid-position closed
  - Mid-position exhausted

Special features

Individual valve
- Electrical connection via standardized 4-pin M12 plug or via 4-pin clamped terminal connection for configuration by the user
- Available with internal/external pilot air supply

Terminal with individual connection
- Max. 32 valve positions/ max. 32 solenoid coils
- Any compressed air supply
- Any number of pressure zones

AS-interface
- 1 to 8 valve positions/ max. 8 solenoid coils

Multi-pin plug terminal
- Max. 32 valve positions/ max. 32 solenoid coils
- Parallel modular valve linking
- Any compressed air supply
- Any number of pressure zones

Fieldbus terminal/control block CPX
- Max. 32 valve positions/ max. 32 solenoid coils
- Any compressed air supply
- Any number of pressure zones

Fieldbus terminal/ electrical peripherals type 03
- Max. 26 valve positions/ max. 26 solenoid coils
- Any number of pressure zones

Combinable
- Width 18 mm: valve flow rate up to 550 l/min
- Width 26 mm: valve flow rate up to 1,100 l/min
- Width 42 mm: valve flow rate up to 1,500 l/min
- Width 42 mm, 26 mm and 18 mm can be combined on a single valve manifold

Note

Valve manifold type 44 VTSA complies with ISO 15407-2 in width 18 and 26 mm and with ISO 5599-2 in width 42 mm.

Valve manifolds type 44 VTSA, ISO 15407-2/ISO 5599-2

Key features

Valve manifold configurator

Online via: ➔ www.festo.com/us/engineering

A valve manifold configurator is available to help you select a suitable VTSA valve manifold. This makes it much easier to find the right product.

The valve manifolds are fully assembled according to your order specifications and are individually tested. This reduces assembly and installation time to a minimum.
You order a valve manifold type 44 using the order code.

Ordering system for type 44
➔ Internet: type 44

Ordering system for CPX
➔ Internet: cpx

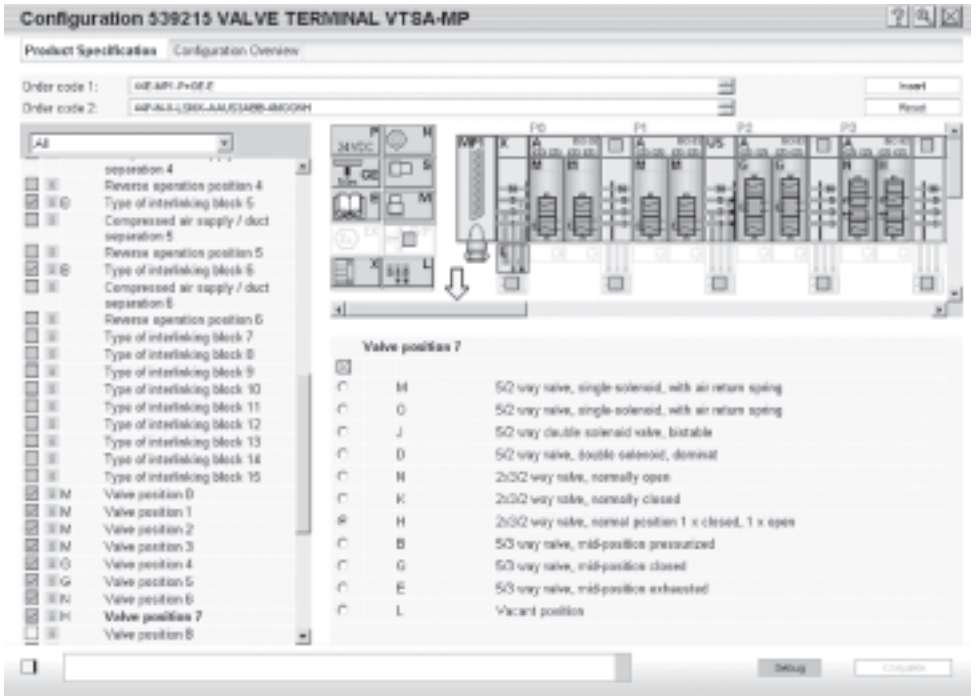

Valve manifolds type 44 VTSA, ISO 15407-2/ISO 5599-2

Key features

Individual connection

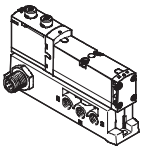

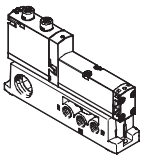

Valves on individual sub-bases can be used for actuators further away from the valve manifold.

The electrical connection is established using a standard 4-pin M12 plug 24 V DC (EN 61076-2-101) or it can be configured by the user with a 4-pin clamped terminal connection or cable end 24 V DC or 110 V AC.

Terminal with individual connection

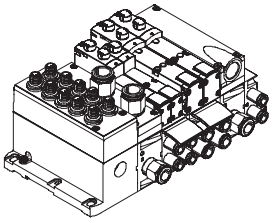

Control signals from the controller to the valve manifold are transmitted via an individual connecting cable.

The valve manifolds can be equipped with max. 20 valves and max. 20 solenoid coils.

The electrical connection is established via a 5-pin M12 plug 24 V DC.

Terminal with multi-pin plug connection

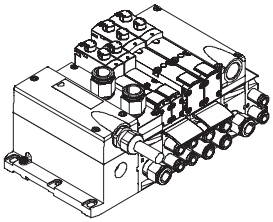

Control signals from the controller to the valve manifold are transmitted via a pre-assembled multi-wire cable or a self-assembled multi-pin plug connection (tension spring terminal), which substantially reduces installation time.

The valve manifolds can be equipped with max. 32 valves and max. 32 solenoid coils.

Versions

- Multi-pin plug connection with terminal strip (tension spring terminal) 24 V DC or 110 V AC
- Pre-assembled connecting cable 24 V DC
- Sub-D plug connector for assembly by the user, 37-pin
- Round plug connector M23, 19-pin, 24 V DC

AS-interface connection

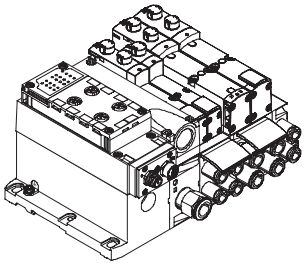

A special feature of the AS-interface is the simultaneous transmission of data and supply power via a two-wire cable. The encoded cable profile prevents connection with incorrect polarity. The valve manifold with AS-interface can be configured as follows:

- With one to eight modular valve positions (max. 8 solenoid coils). This corresponds to one to eight VTSA valves.
- With all available valve functions.

The connection technology used for the inputs can be selected as with CPX: M8, M12, quick connection, Sub-D, tension spring terminal (terminals to IP20).

Further information
➔ Internet: as-interface

Note

The valve manifold VTSA with AS-interface connection is based on the same electrical manifold module as the valve manifold with multi-pin plug connection. This means it is possible to convert a valve manifold with multi-pin plug connection using an AS-interface module (➔ 86). The technical specifications of the AS-interface system must be observed in this case.
➔ Internet: as-interface

Valve manifolds type 44 VTSA, ISO 15407-2/ISO 5599-2

Key features

Terminal with fieldbus connection from the “Electrical peripherals type 03” system

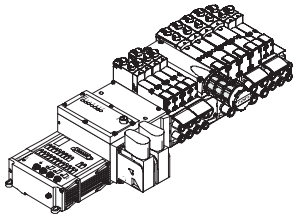

An integrated fieldbus node manages the communication connection to a higher-order PLC. This enables a space-saving pneumatic and electronic solution.

Up to 26 solenoid coils can be actuated using the fieldbus connection via the “Electrical peripherals type 03” system.

Versions
- Interbus
  ➔ Internet: type 03

Terminal with fieldbus connection from the CPX system

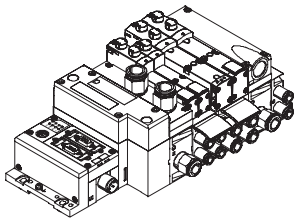

An integrated fieldbus node manages the communication connection to a higher-order PLC. This enables a space-saving pneumatic and electronic solution.

Valve manifolds with fieldbus interfaces can be configured with up to 16 manifold sub-bases. With 2 solenoid coils per connection,
up to 32 solenoid coils can thus be actuated.

Versions
- Profibus DP
- Interbus
- DeviceNet
- CANopen
- CC-Link
- CPX terminal
- EtherCAT
  ➔ Internet: cpx

Terminal with control block connection from the CPX system

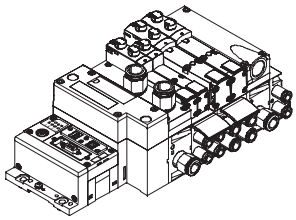

Controllers integrated in the Festo valve manifolds enable the construction of stand-alone control units to IP65, without control cabinets.

Using the slave operation mode, these valve manifolds can be used for intelligent pre-processing and are therefore ideal modules for designs using decentralised intelligence.

In the master operation mode, terminal groups can be designed with many options and functions, which can autonomously control a medium sized machine/system.
- CPX terminal
  ➔ Internet: cpx

CP string extension from the CPX system

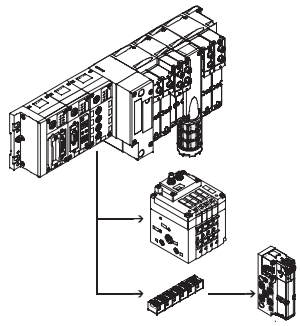

The optional string extension enables additional valve manifolds and I/O modules to be connected to the fieldbus node of the CPX terminal. Different input and output modules as well as CPV-SC, CPV and CPA valve manifolds can be connected.
The maximum length of the CP string extension is 10 metres, which means that the extension modules can be mounted directly on-site. All of the required electrical signals are transmitted via the CP cable, which in turn means that no further installation is needed on the extension module.

The CP string interface offers:
- 32 input signals
- 32 output signals for output modules 24 V DC or solenoid coils
- Logic and sensor supply for the input modules
- Load voltage supply for the valve manifolds
- Logic supply for the output modules

➔ Internet: cpi

Valve manifolds type 44 VTSA, ISO 15407-2/ISO 5599-2

Peripherals overview

Modular pneumatic components

The modular design of the VTSA ensures maximum flexibility right from the planning stage and offers maximum ease of service in operation.

The system consists of manifold sub-bases and valves.
The manifold sub-bases are screwed together and thus form the support system for the valves.

Inside the manifold sub-bases are the connection ducts for supplying compressed air to and venting from the valves on the terminal as well as the working ports for the pneumatic cylinders for each valve.

Each manifold sub-base is connected to the next using four screws.
Individual terminal sections can be isolated and further manifold blocks inserted by loosening these screws. This ensures that the valve manifold can be rapidly and reliably extended.

Basic system modularity

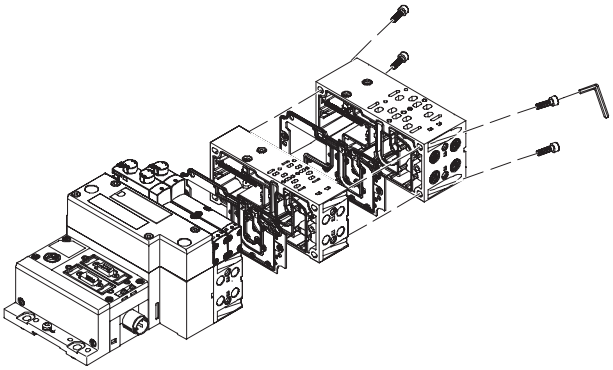

Valve modularity

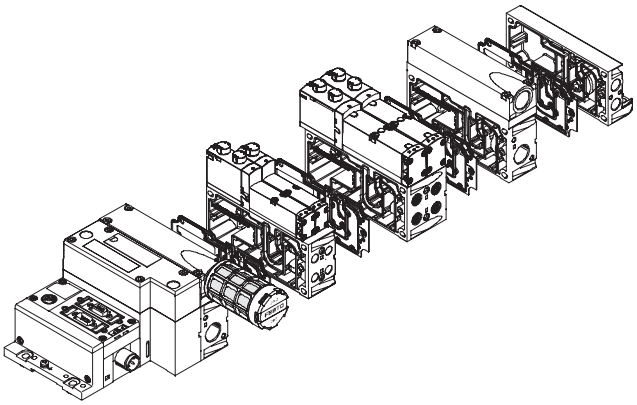

Stacking modularity

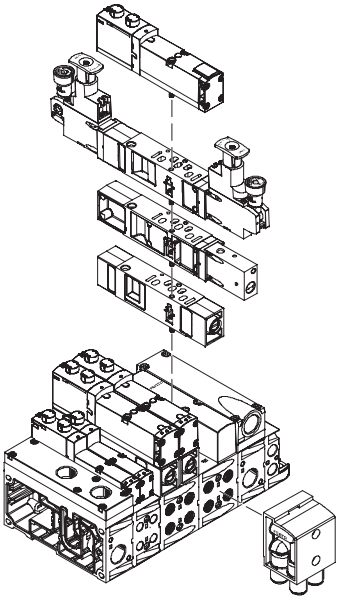

Valve manifolds type 44 VTSA, ISO 15407-2/ISO 5599-2

Peripherals overview

Modular electrical peripherals

The manner in which the valves are actuated differs according to whether you are using a multi-pin terminal or fieldbus terminal.

The VTSA with CPX interface is based on the internal bus system of the CPX and uses this communication system for all solenoid coils and a range of electrical input and output functions.

Parallel linking facilitates the following:

- Transmission of switching information
- High valve density
- Compact design
- Position-based diagnostics
- Separate voltage supply for valves
- Flexible conversion without address shifting
- Transmission of status, parameter and diagnostic data
  ➔ Internet: cpx
- Option of CP interface
- CPX-FEC as autonomous controller with access via Ethernet and web server

VTSA with electrical peripherals CPX

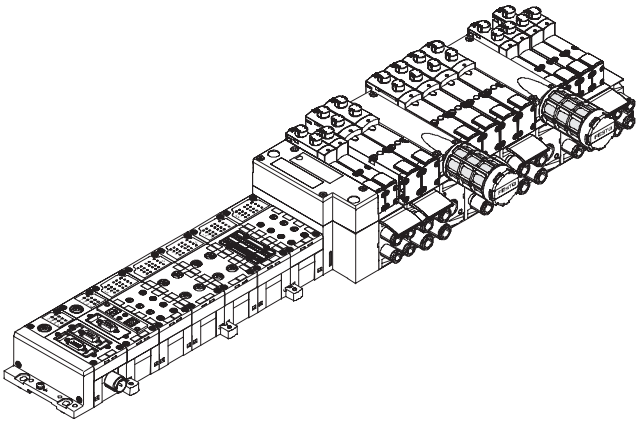

Modularity with electrical peripherals CPX

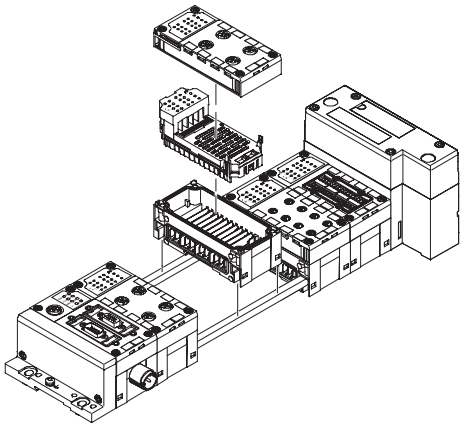

CPX terminal in metal version

Note

The CPX connection blocks are also available in a metal version. This means a complete solution in a sturdy metal design can be selected for applications of the valve manifold VTSA in welding environments.

The mechanical connection between the CPX modules in metal design is created using special angle fittings. The CPX terminal can thus be expanded at any time.

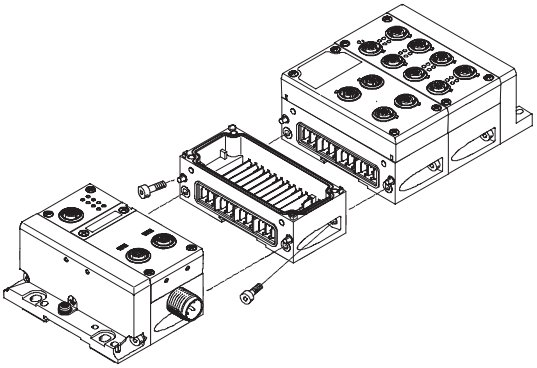

Valve manifolds type 44 VTSA, ISO 15407-2/ISO 5599-2

Peripherals overview

Individual sub-base

Order code:

- Using individual part numbers

Individual sub-bases can be equipped with any valve.

The electrical connection is established using a standard 4-pin M12 plug (EN 61076-2-101) or it can be configured by the user with a 4-pin clamped terminal connection/open cable end.

Width 18 mm with M12 plug

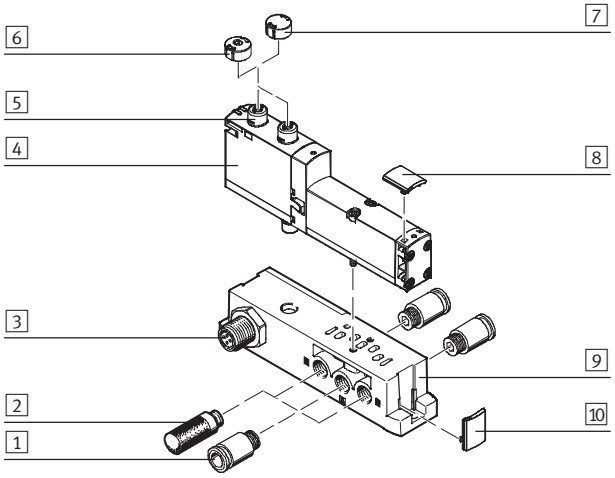

Width 26 mm with M12 plug

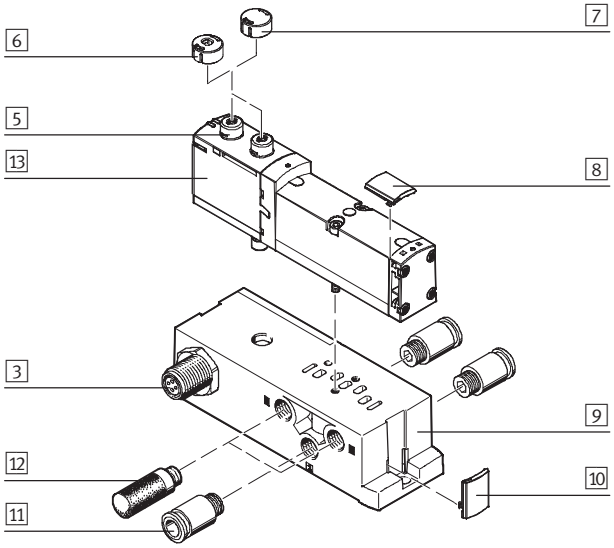

		Brief description	➔ Page/Internet
1	Fitting	G⅛ for supply/exhaust ports (1, 3, 5) and working ports (2, 4)	89
2	Silencer	G⅛ for supply/exhaust ports (1, 3, 5)	89
3	Electrical connection M12[1)]	4-pin	–
4	VSVA valve	Width 18 mm	78
5	Manual override	Non-detenting/detenting, per solenoid coil	–
6	Cover cap	For manual override, non-detenting	87
7	Cover cap	For manual override, covered	87
8	Inscription label holder	For valves	87
9	Individual sub-base	For valve VSVA	81
10	Inscription label holder	For manifold blocks	87
11	Fitting	G¼ for supply/exhaust ports (1, 3, 5) and working ports (2, 4)	89
12	Silencer	G¼ for supply/exhaust ports (1, 3, 5)	89
13	VSVA valve	Width 26 mm	78

1) Only for 24 V DC

Note: All metric products can be used within inch tubing systems via hybrid fittings (➔ Overview on page 88)

Valve manifolds type 44 VTSA, ISO 15407-2/ISO 5599-2

Peripherals overview

Individual sub-base

Width 18 mm with clamped terminal connection

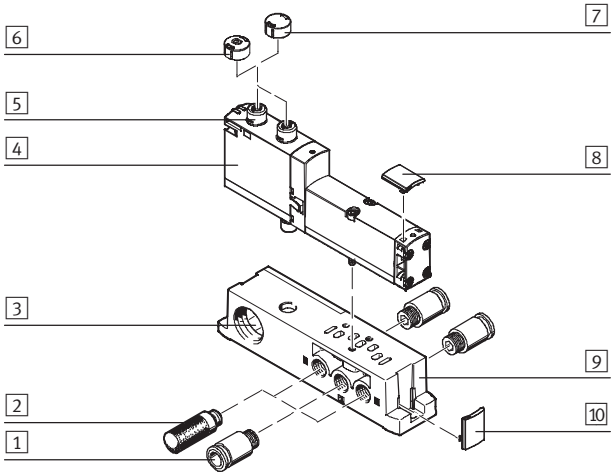

Width 26 mm with clamped terminal connection

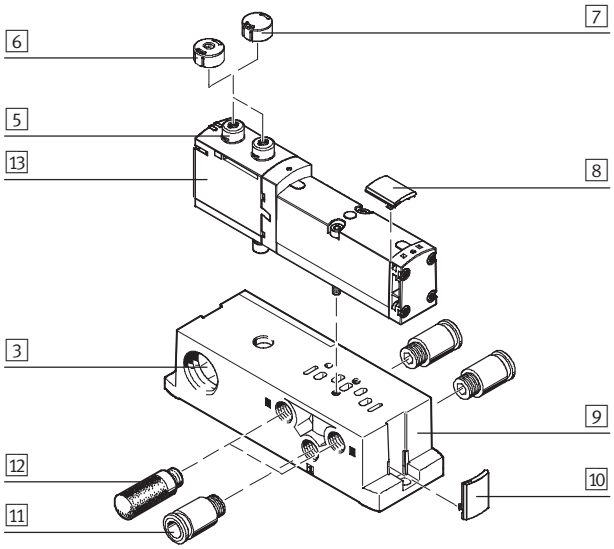

	Brief description	➔ Page/Internet
1 Fitting	G⅛ or ⅛NPT for supply/exhaust ports (1, 3, 5) and working ports (2, 4)	89
2 Silencer	G⅛ or ⅛NPT for supply/exhaust ports (1, 3, 5)	89
3 Clamped terminal connection[1)]	4-pin, configured by the user	–
4 VSVA valve	Width 18 mm	78
5 Manual override	Non-detenting/detenting, per solenoid coil	–
6 Cover cap	For manual override, non-detenting	87
7 Cover cap	For manual override, covered	87
8 Inscription label holder	For valves	87
9 Individual sub-base	For valve VSVA	81
10 Inscription label holder	For manifold blocks	87
11 Fitting	G¼ or ¼NPT for supply/exhaust ports (1, 3, 5) and working ports (2, 4)	89
12 Silencer	G¼ or ¼NPT for supply/exhaust ports (1, 3, 5)	89
13 VSVA valve	Width 26 mm	78

1) 24 V DC or 110 V AC

Note: All metric products can be used within inch tubing systems via hybrid fittings (➔ Overview on page 88)

Valve manifolds type 44 VTSA, ISO 15407-2/ISO 5599-2

Peripherals overview

Individual sub-base

Width 42 mm with spring-loaded terminal/open end

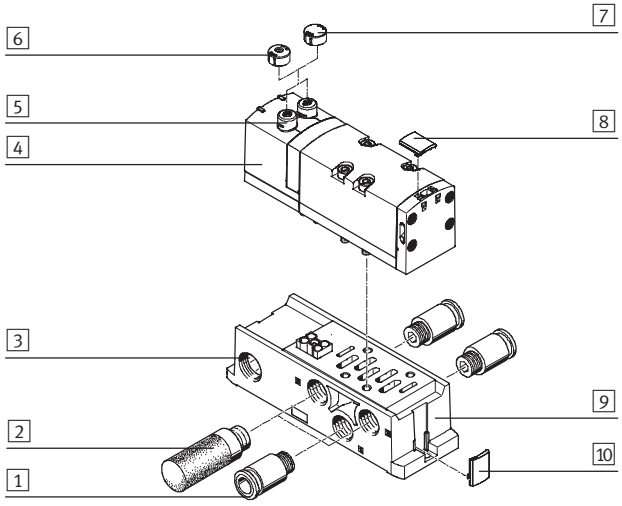

Width 42 mm with M12 plug

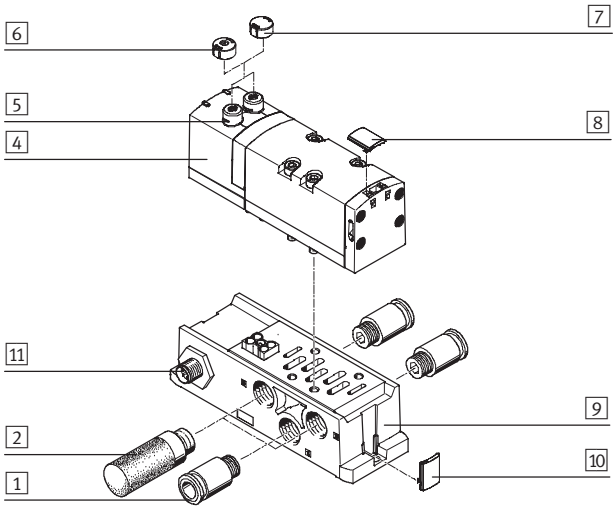

		Brief description	➔ Page/Internet
1	Fitting	G3/8 or 3/8NPT for supply/exhaust ports (1, 3, 5) and working ports (2, 4)	89
2	Silencer	G3/8 or 3/8NPT for supply/exhaust ports (1, 3, 5)	89
3	Clamped terminal connection/open end[1)]	4-pin, configured by the user	–
4	VSVA valve	Width 42 mm	78
5	Manual override	Non-detenting/detenting, per solenoid coil	–
6	Cover cap	For manual override, non-detenting	87
7	Cover cap	For manual override, covered	87
8	Inscription label holder	For valves	87
9	Individual sub-base	For valve VSVA	81
10	Inscription label holder	For manifold blocks	87
11	Electrical connection M12[2)]	4-pin	–

1) 24 V DC or 110 V AC
2) Only for 24 V DC

Note: All metric products can be used within inch tubing systems via hybrid fittings (➔ Overview on page 88)

Valve manifolds type 44 VTSA, ISO 15407-2/ISO 5599-2

Peripherals overview

Valve manifold pneumatics

The manifold sub-bases width 18 and 26 mm are prepared for:
- 2 single solenoid valves
- 2 double solenoid valves

The manifold sub-bases width 42 mm are prepared for:
- 1 single solenoid valve
- 1 double solenoid valve

- Double solenoid valve positions can be equipped with any valve or a blanking plate.
- Single solenoid valve positions can only be equipped with single solenoid valves or a blanking plate.

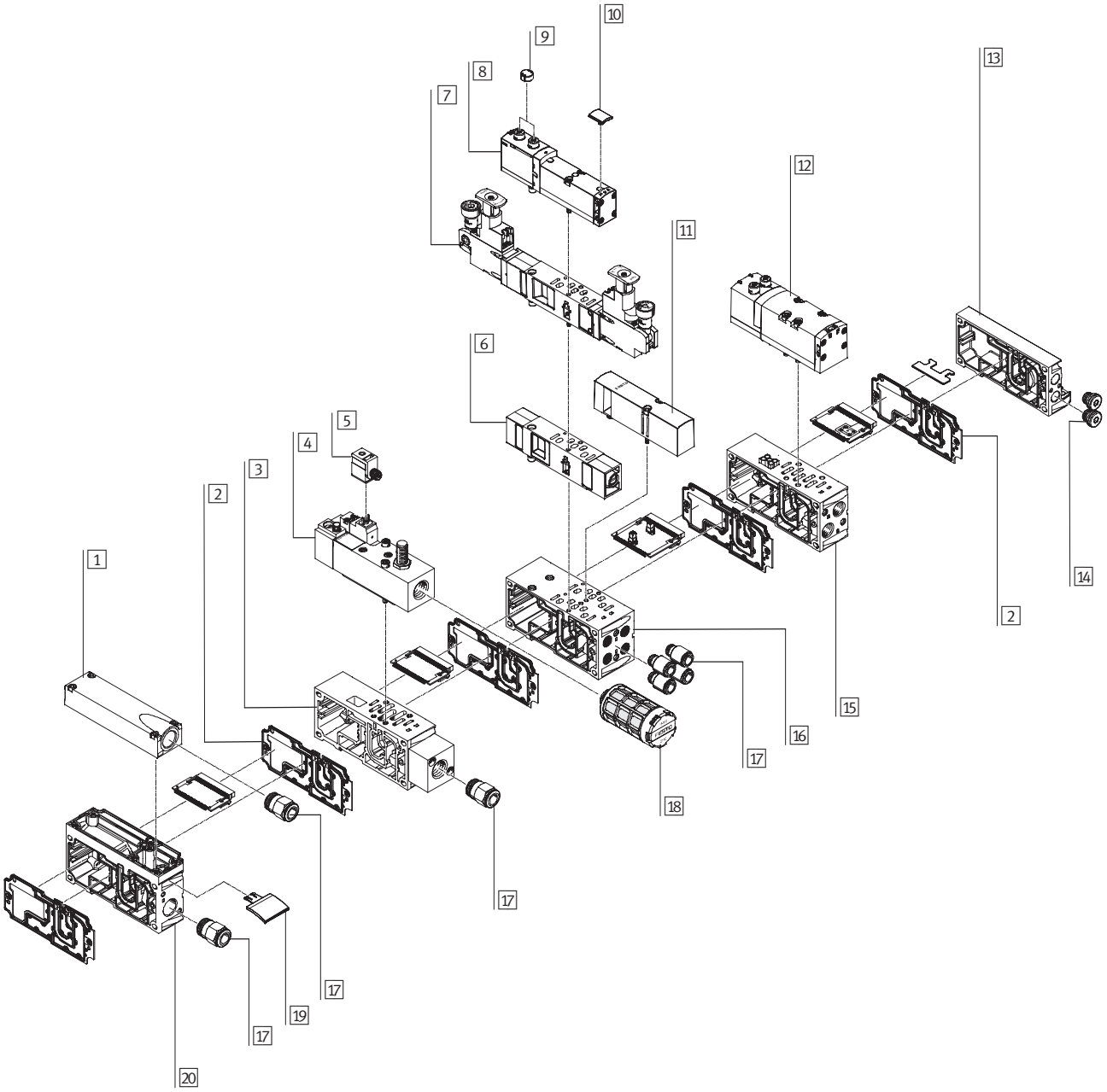

Note: All metric products can be used within inch tubing systems via hybrid fittings (➔ Overview on page 88)

Valve manifolds type 44 VTSA, ISO 15407-2/ISO 5599-2

Peripherals overview

Valve manifold pneumatics			
		Brief description	➔ Page/Internet
1	Exhaust port cover	For ducted exhaust air (ports 3 and 5 combined)	82
2	Duct separation/seal	–	82
3	Manifold sub-base	For soft-start valve	75
4	Soft-start valve	For slow and reliable pressure build-up	75
5	Plug socket	–	77
6	Flow control plate	–	85
7	Pressure regulator plate	–	83
8	Valve	Width 26 mm	78
9	Cover cap	For manual override, non-detenting, covered	87
10	Inscription label holder	For valve	87
11	Blanking plate	For unused valve position (vacant position)	87
12	Valve	Width 42 mm	80
13	End plate with pilot air selector	–	80
14	Blanking plug	–	89
15	Manifold sub-base	For valves with a width of 42 mm	80
16	Manifold sub-base	For valves with a width of 26 mm	80
17	Fittings	–	89
18	Silencer	–	89
19	Inscription label holder	For manifold sub-base, sub-base, 90° connection plate	87
20	Supply plate	–	82

Note: All metric products can be used within inch tubing systems via hybrid fittings (➔ Overview on page 88)

Valve manifolds type 44 VTSA, ISO 15407-2/ISO 5599-2

Peripherals overview

Valve manifold with individual connection

Order code:
- 44E for the electrical components
- 44P for the pneumatic components

VTSA valve manifolds with individual connections can be expanded by up to 20 valves with max. 20 solenoid coils.
The manifold sub-bases width 18 and 26 mm are prepared for:
- 2 single solenoid valves
- 2 double solenoid valves

The manifold sub-bases width 42 mm are prepared for:
- 1 single solenoid valve
- 1 double solenoid valve

- Double solenoid valve positions can be equipped with any valve or a blanking plate.
- Single solenoid valve positions can only be equipped with single solenoid valves or a blanking plate.

The electrical connection is established via a 5-pin M12 plug (24 V DC).

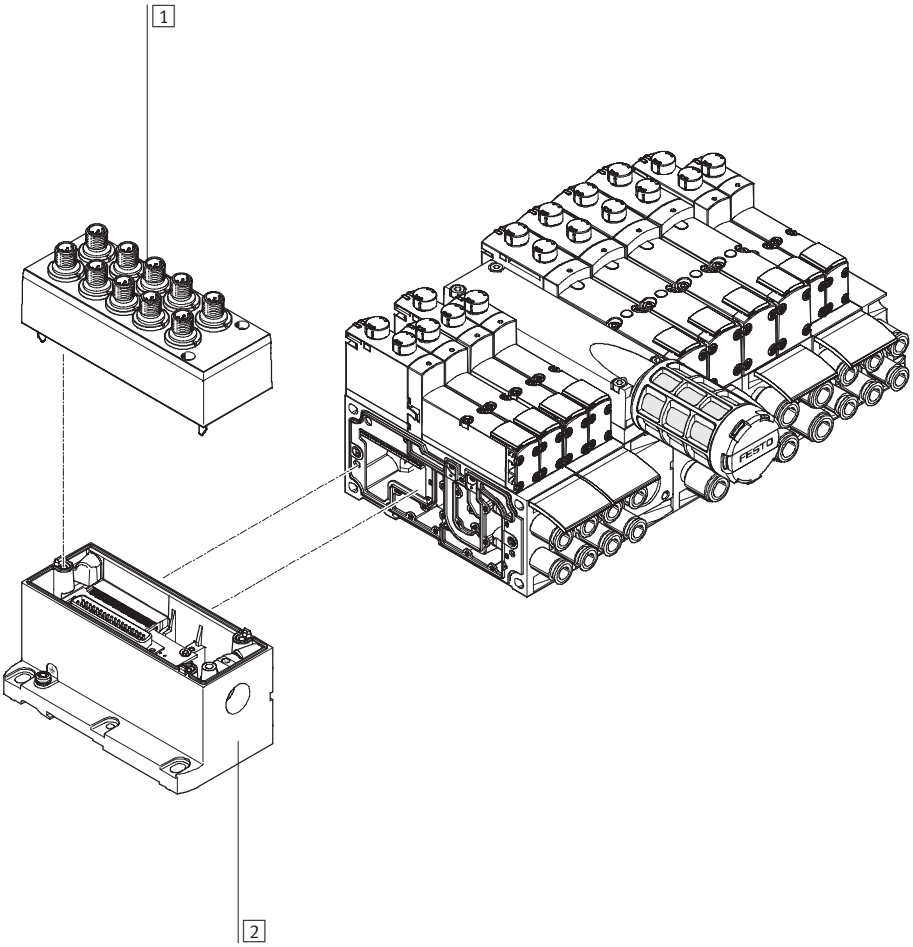

	Brief description	➔ Page/Internet
1 Cover	For individual connection	85
2 Multi-pin plug connection	Individual connection with M12, 10-way or 6-way (including cover)	85

Valve manifold with multi-pin plug connection

Order code:
- 44E for the electrical components
- 44P for the pneumatic components

VTSA valve manifolds with multi-pin plug connection can be expanded by up to 32 valves with max. 32 solenoid coils.
The manifold sub-bases width 18 and 26 mm are prepared for:
- 2 single solenoid valves
- 2 double solenoid valves

The manifold sub-bases width 42 mm are prepared for:
- 1 single solenoid valve
- 1 double solenoid valve
- Double solenoid valve positions can be equipped with any valve or a blanking plate.
- Single solenoid valve positions can only be equipped with single solenoid valves or a blanking plate.

The following multi-pin plug connections to IP65 are available:
- 37-pin Sub-D connection (24 V DC): The connecting cable can be ordered in lengths of 2.5 m, 5 m and 10 m for max. 8, 22 or 32 solenoid coils respectively
- Terminal strip (24 V DC or 110 V AC)
- 19-pin round plug connector (24 V DC)

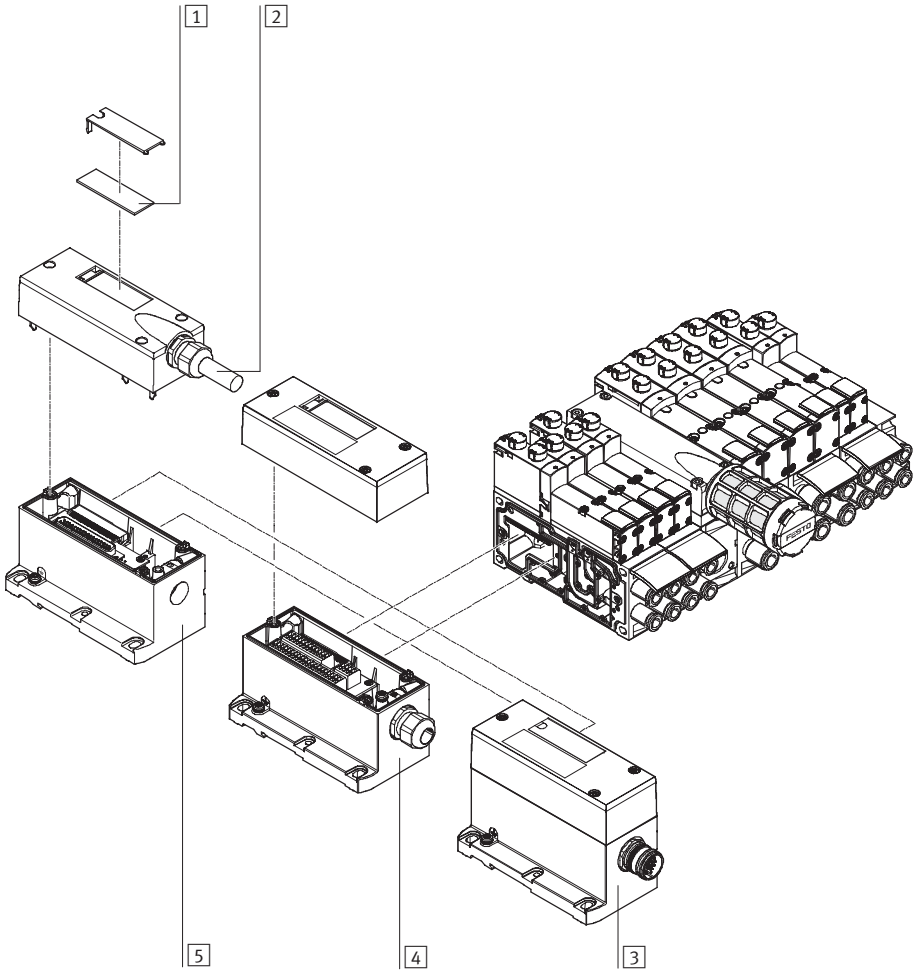

		Brief description	➔ Page/Internet
1	Inscription labels	Large, for multi-pin plug connection	–
2	Multi-pin plug cable	–	87
3	Multi-pin plug connection	Via M23 round plug connection 24 V DC	85
4	Multi-pin plug connection	Via terminal strip (Cage Clamp®) 24 V DC or 110 V AC	85
5	Multi-pin plug connection	Via multi-pin cable 24 V DC	85

Valve manifolds type 44 VTSA, ISO 15407-2/ISO 5599-2

Peripherals overview

Valve manifold with AS-interface connection

Order code:
- 52E for the electrical components
- 44P for the pneumatic components

VTSA valve manifolds with AS-interface connection can be expanded by up to 8 valves with max. 8 solenoid coils.
The manifold sub-bases width 18 and 26 mm are prepared for:
- 2 single solenoid valves
- 2 double solenoid valves

The manifold sub-bases width 42 mm are prepared for:
- 1 single solenoid valve
- 1 double solenoid valve

- Double solenoid valve positions can be equipped with any valve or a blanking plate.
- Single solenoid valve positions can only be equipped with single solenoid valves or a blanking plate.

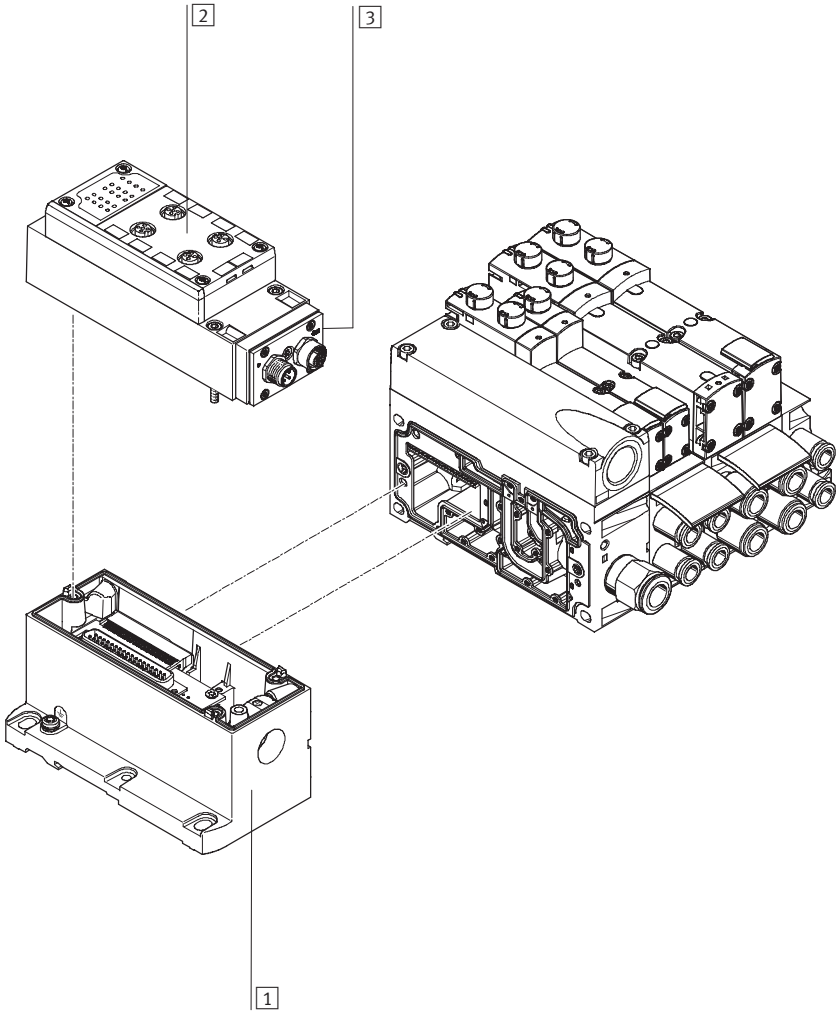

		Brief description	➔ Page/Internet
1	Multi-pin plug connection	Can be ordered together with the AS-interface module as an electrical interface for AS-interface	86
2	Manifold block for AS-interface	–	87
3	AS-interface module	–	86

Valve manifolds type 44 VTSA, ISO 15407-2/ISO 5599-2

Peripherals overview

Valve manifold with fieldbus connection, electrical peripherals type 03

Order code:
- 03E-... for the electrical peripherals
- 44P for the pneumatic components

VTSA valve manifolds with fieldbus interface can be expanded by up to 26 valves with max. 26 solenoid coils. Each valve position can be equipped with any valve or a blanking plate. The rules for type 03 apply to the equipment that can be used in combination with electrical peripherals type 03.

In general:
- Max. 12 electrical modules
- Digital inputs/outputs
- Analogue inputs/outputs

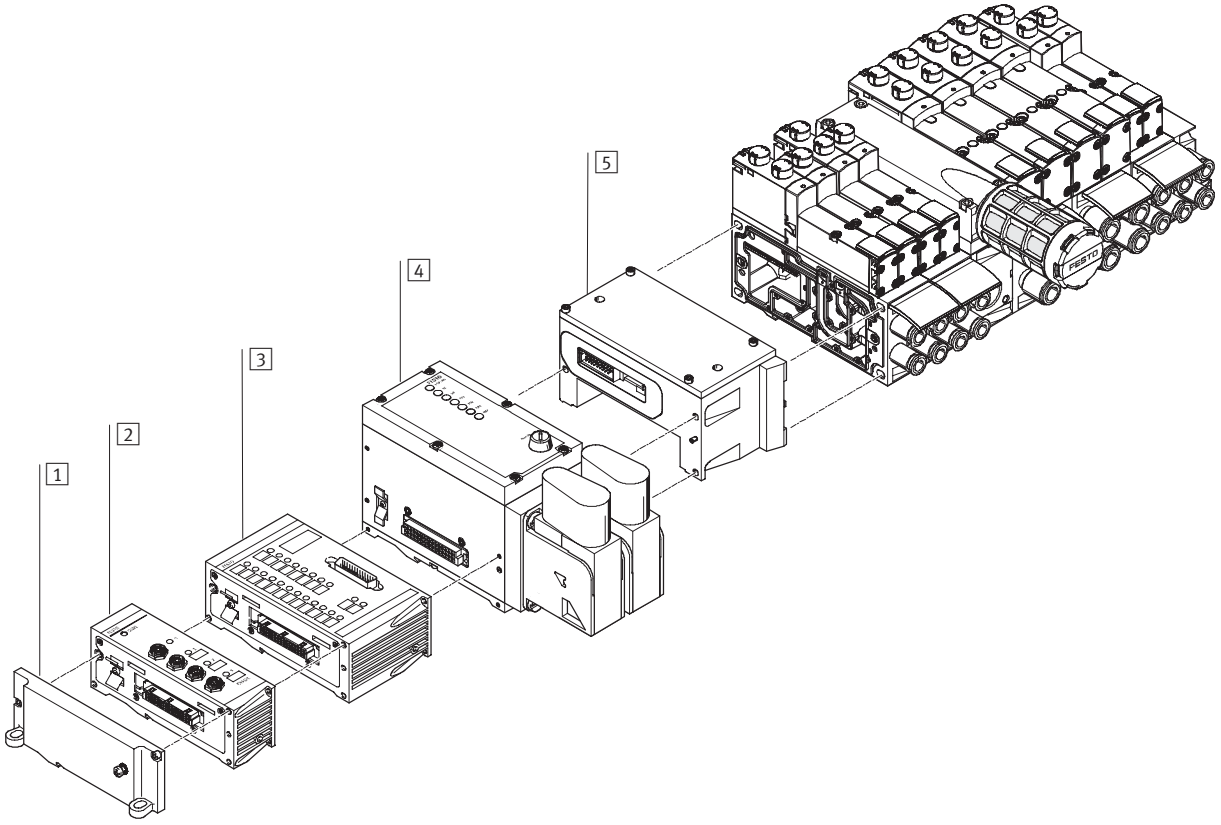

	Brief description	➔ Page/Internet
1 Left-hand end plate	–	–
2 Input or output module	5-pin, M12	86
3 Input/output module	Sub-D	86
4 Bus node	FB21 (for Interbus with fibre optic cable)	86
5 Pneumatic interface	–	86

Valve manifolds type 44 VTSA, ISO 15407-2/ISO 5599-2

Peripherals overview

Valve manifold with fieldbus connection, control block (electrical peripherals CPX)

Order code:
- 50E-... for the electrical peripherals
- 51E-... for the electrical peripherals, metal linking
- 44P for the pneumatic components

VTSA valve manifolds with fieldbus interface can be expanded by up to 32 valves with max. 32 solenoid coils. Each valve position can be equipped with any valve or a blanking plate. The rules for CPX apply to the equipment that can be used in combination with the electrical peripherals CPX.

In general:
- Max. 10 electrical modules
- Digital inputs/outputs
- Analogue inputs/outputs
- Parameterisation of inputs and outputs
- Integrated convenient diagnostic system
- Preventive maintenance concepts

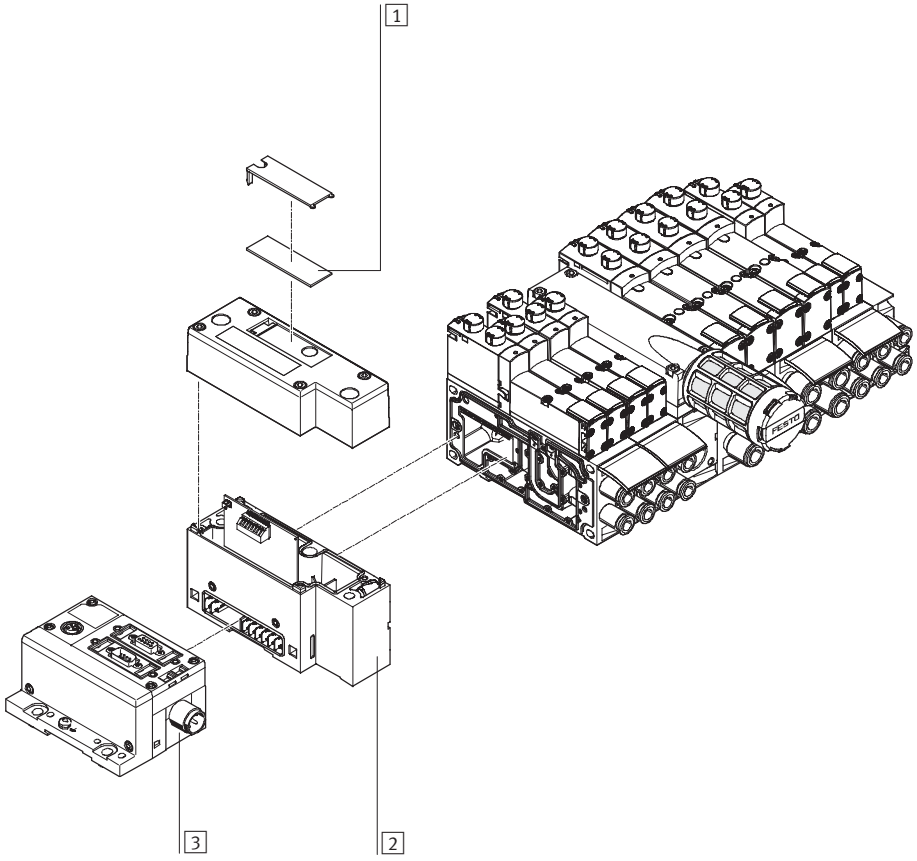

	Brief description	➔ Page/Internet
1 Inscription labels	Large, for pneumatic interface CPX	–
2 Pneumatic interface	–	85
3 Fieldbus interface	–	cpx

Valve manifolds type 44 VTSA, ISO 15407-2/ISO 5599-2

Peripherals overview

Valve manifold with fieldbus connection/multi-pin plug connection and individual valve connection

In applications with specific emergency stop conditions, it can be necessary to be able to individually switch one or more valves separately from the terminal controller.
Standard valves (VSVA) with individual electrical connection (round or square plug) can be mounted on the valve manifold to this end.
In order for the protection class IP65 to be achieved, the functionless opening in the sub-base for the electrical connection must be sealed.
An end cap is available for the 18 mm and the 26 mm widths.
For central control of the valve manifold via multi-pin plug or fieldbus connection, the valve position occupied in this way acts like a vacant position, i.e. the assigned address in the fieldbus node or the corresponding connection in the multi-pin plug connection is occupied.

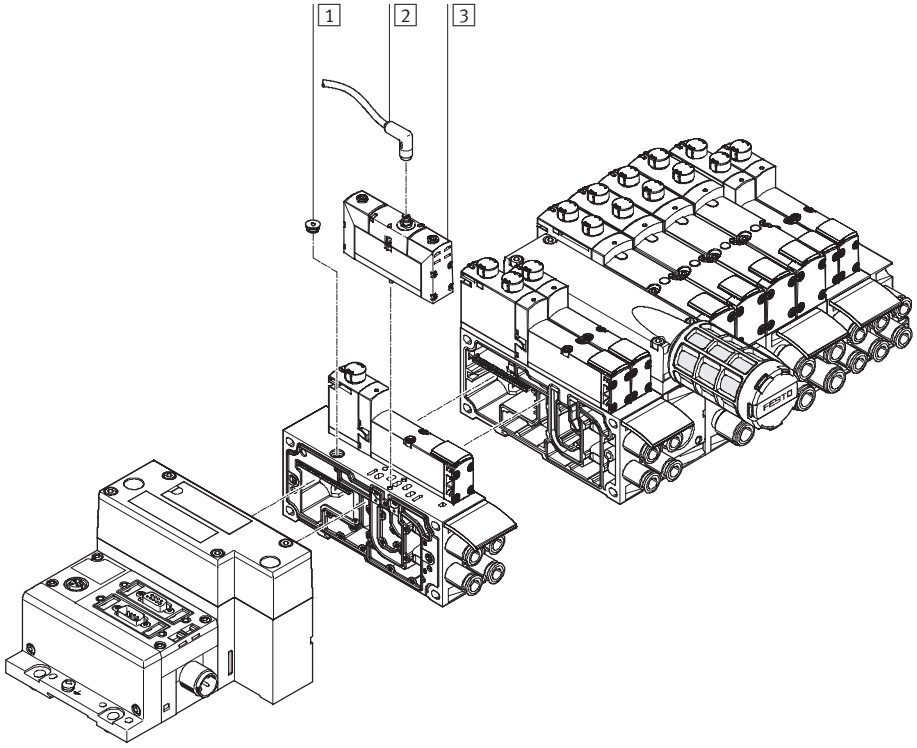

	Brief description	➔ Page/Internet
1 End cap	For sealing the electrical connection on the sub-base	87
2 Connecting cable	–	valves vsva
3 Valve	Width 18 mm or width 26 mm	valves vsva

Valve manifolds type 44 VTSA, ISO 15407-2/ISO 5599-2

Key features – Pneumatic components

Sub-base valve

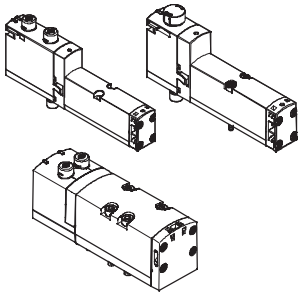

VTSA offers a comprehensive range of valve functions. All valves are fitted with piston spool and patented sealing system which ensures efficient sealing, a broad operating pressure range and long service life.

Sub-base valves can be quickly replaced since the tubing connections remain on the sub-base.
Irrespective of the valve function there are sub-base valves with one solenoid coil (single solenoid) or with two solenoid coils for double solenoid or double valve functions.

Reverse/vacuum operation
Select reverse operation (code Z) if you wish to operate an actuator (cylinder) with different pressures for the forward and return stroke. Please note that the valves must then be operated via a separate pressure zone.
The 3/2-way valves, reversible, are also suitable for vacuum operation.

Blanking plate

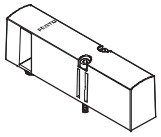

Plate without valve function for reserving valve positions on a valve manifold.

Valves and blanking plates are attached to the manifold sub-base using two screws.

Valve function

Code	Circuit symbol	Width 18 mm	Width 26 mm	Width 42 mm	Description
M	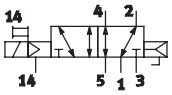	■	■	■	5/2-way valve, single solenoid • Pneumatic spring return
O	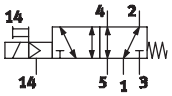	■	■	■	5/2-way valve, single solenoid • Mechanical spring return
J	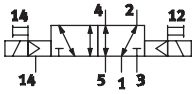	■	■	■	5/2-way valve, double solenoid
D	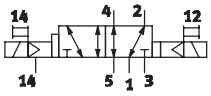	■	■	■	5/2-way valve, double solenoid • Dominant signal with port 14 on the control side
N	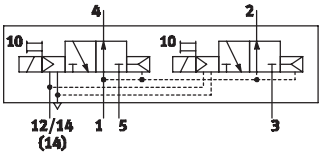	■	■	■	2x 3/2-way valve, single solenoid • Normally open • Pneumatic spring return • Operating pressure > 3 bar
K	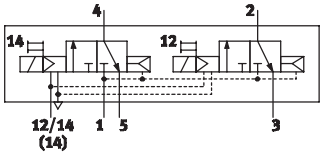	■	■	■	2x 3/2-way valve, single solenoid • Normally closed • Pneumatic spring return • Operating pressure > 3 bar

Note

A filter must be installed upstream of valves operated in vacuum mode. This prevents any foreign matter in the intake air getting into the valve (e.g. when operating a suction cup).

Valve manifolds type 44 VTSA, ISO 15407-2/ISO 5599-2

Key features – Pneumatic components

Valve function					
Code	Circuit symbol	Width			Description
		18 mm	26 mm	42 mm	
H	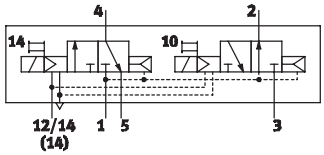	■	■	■	2x 3/2-way valve, single solenoid • Normal position – 1x closed – 1x open • Pneumatic spring return • Operating pressure > 3 bar
B	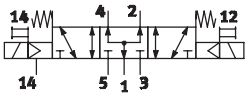	■	■	■	5/3-way valve • Mid-position pressurised[1)] • Mechanical spring return
G	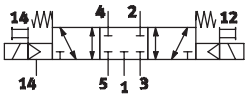	■	■	■	5/3-way valve • Mid-position closed[1)] • Mechanical spring return
E	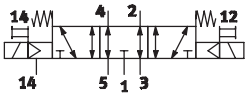	■	■	■	5/3-way valve • Mid-position exhausted[1)] • Mechanical spring return
P	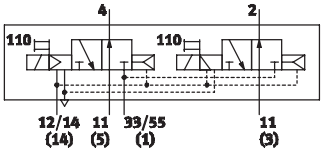	■	■	■	2x 3/2-way valve, single solenoid • Reverse operation • Normally open • Pneumatic spring return
Q	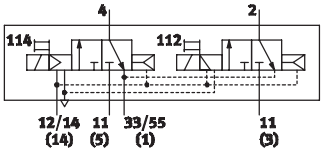	■	■	■	2x 3/2-way valve, single solenoid • Reverse operation • Normally closed • Pneumatic spring return
R	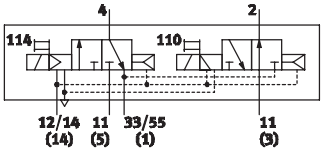	■	■	■	2x 3/2-way valve, single solenoid • Reverse operation • Normal position – 1x closed – 1x open • Pneumatic spring return
L		■	■	■	For valve manifold only: Blanking plate for vacant valve position

1) If neither solenoid coil is energised, the valve moves to its mid-position by means of a mechanical spring.
If both coils are energised at the same time, the valve remains in the previously assumed switching position

Constructional design

Valve replacement

The valves are attached to the metal manifold sub-base using two screws, which means that they can be easily replaced. The mechanical robustness of the manifold sub-base guarantees efficient long-term sealing.

Extension

Vacant positions can be fitted with valves at a later date. The dimensions, mounting points and existing pneumatic installations remain unchanged during this process.
The order code VSVA-... is located on the front of the valve beneath the manual override.

Vertical stacking

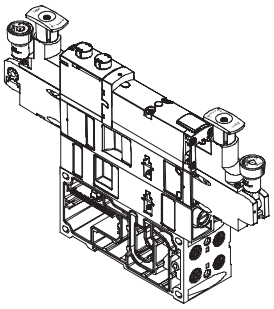

Additional functions can be added to each valve position between the manifold sub-base and the valve. These functions are known as vertical stacking modules, and enable special functioning or control of an individual valve position. Combinations of several valve sizes on one valve manifold are possible.

Note

Certain combinations are not recommended due to the design of the individual vertical stacking components.

Vertical stacking components

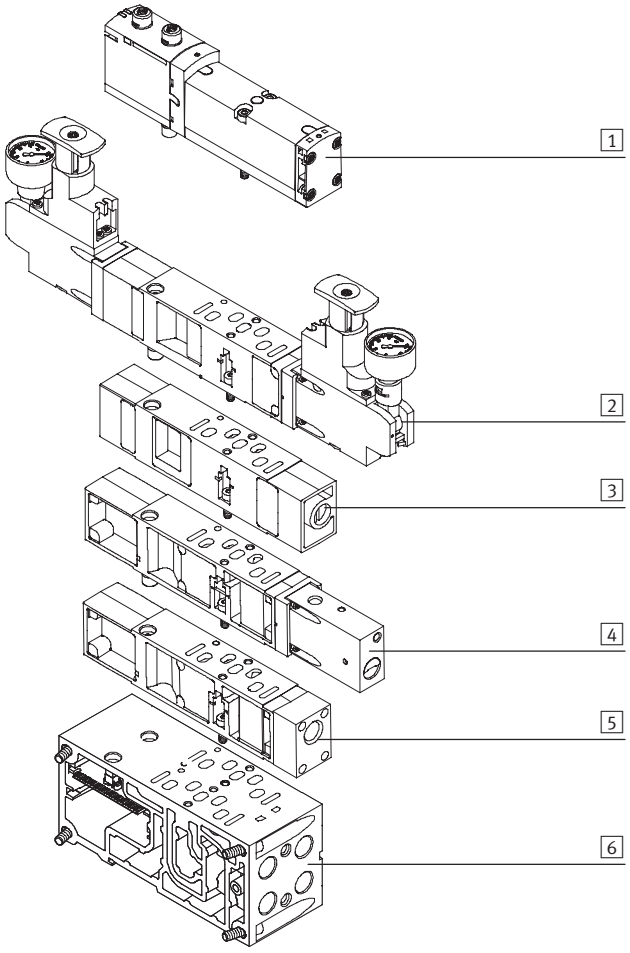

The following component sequence is recommended for valve positions with vertical stacking:

1. ISO valve
2. Pressure regulator plate
3. Flow control plate
4. Vertical pressure shut-off plate
5. Vertical supply plate
6. Manifold sub-base

Vertical stacking

Pressure regulator plate

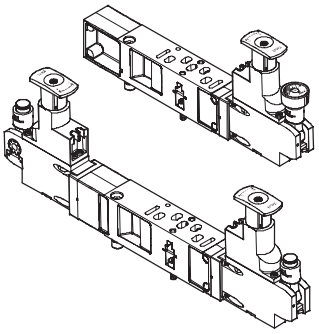

An adjustable pressure regulator can be installed between the manifold block and the valve in order to control the force of the triggered actuator.

This pressure regulator maintains an essentially constant output pressure (secondary side) independent of pressure fluctuations (primary side) and air consumption.

Standard version:
- Standard port pattern to ISO 15407-2 or ISO 5599-2
- For supply pressure up to 6 bar or up to 10 bar
- Without pressure gauge (optional)
- Regulator knob with 3 positions (locked, reference position, free running)

Mode of operation of pressure regulator plate (P regulator) for port 1; code: ZA, ZAY, ZF, ZFY

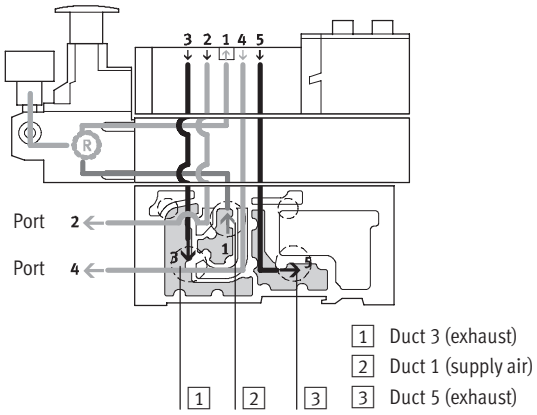

This pressure regulator regulates the pressure upstream of the valve in duct 1. Ducts 2 and 4 thus have the same regulated pressure.

During venting, the exhaust flow in the valve is from duct 2 to duct 3 and from duct 4 to duct 5.

Advantages

- The pressure regulator is not affected by venting, since the pressure is regulated upstream of the valve.
- The pressure regulator can always be adjusted, since the pressure from the valve manifold is always present.

Application examples

- An equal working pressure is required at working ports 2 and 4.
- A lower working pressure (e.g. 3 bar) than the operating pressure present on the valve manifold (e.g. 8 bar) is required.

Mode of operation of the pressure regulator plate (AB regulator) for ports 2 and 4; code: ZD, ZDY, ZI, ZIY

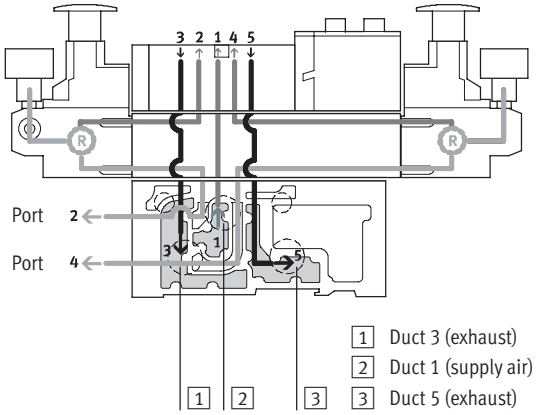

This pressure regulator regulates the pressure in ducts 2 and 4 after the pressure medium flows through the valve. During venting, the exhaust flow in the valve is from duct 2 to duct 3 and from duct 4 to duct 5 via the pressure regulator.

Example with the following switching position:
The supply air flows from duct 1 of the manifold sub-base via the valve to duct 2, it is then regulated and made available at port 2 of the manifold sub-base. At the same time, venting takes place via duct 4 of the manifold sub-base, via the regulator and via the valve into duct 5 of the manifold sub-base.

Restrictions

- The pressure regulator cannot be adjusted in the exhaust position. For example, the pressure regulator for duct 4 cannot be adjusted when the valve is pressurised in the switching position from duct 1 to duct 2 and exhausted from duct 4 to duct 5.

Application examples

- When two different working pressures are required instead of the valve manifold operating pressure at ports 2 and 4.

Vertical stacking

Mode of operation of the pressure regulator plate (AB regulator, reversible) for ports 2 and 4, reversible; code: ZE, ZEY, ZJ, ZJY

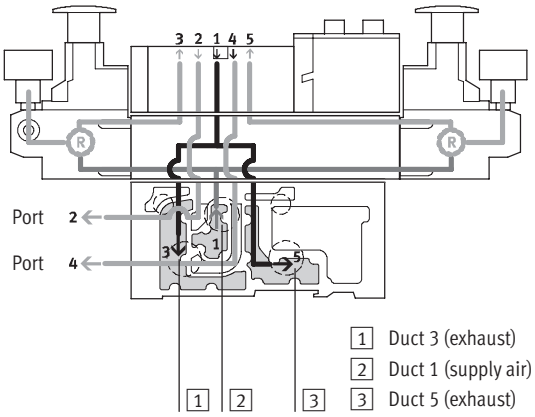

With this pressure regulator, the supply air (duct 1) is split and routed directly to both pressure regulators. In each case the regulated supply air is present in ducts 3 and 5 on the valve. The valve is thus operated in reversible mode.
This means:

- Duct 3 routes the working pressure to port 2
- Duct 5 routes the working pressure to port 4

Example with the following switching position:
The supply air in duct 1 is split among ducts 3 and 5 in the regulator and flows from here to the valve. In the valve, the supply air is routed to port 2 of the manifold sub-base. The exhaust air is simultaneously routed via duct 4 of the manifold sub-base and via the valve to regulator duct 1, where it is split between ducts 3 and 5 and then drawn off via the manifold sub-base.

Application examples

- When two different pressures are required in ducts 2 and 4 instead of the operating pressure.
- When fast venting is required.
- When the pressure regulator must always be adjustable.

Note

- Reversible pressure regulator plates may only be combined with valves that can be operated in reversible mode.
- Valves in valve positions with vertical pressure shut-off plates are operated with internal pilot air supply, even when the valve manifold is operated with external pilot air supply.
- The following combination of reversible valve manifolds with vertical stacking components is not permitted:
  - Reversible pressure regulator plates
  - Flow control plates
  - Vertical pressure shut-off plates
  - Vertical supply plates

Advantages

- Fast cycle times.
- 50% higher exhaust flow rate, as air is not exhausted via the pressure regulator. The load on the pressure regulator is also reduced.
- No quick exhaust valves are required.
- Operating pressure is always present at the pressure regulator, as the pressure is regulated upstream of the valve, i.e. the regulator can always be adjusted.

Disadvantages

- 2x 3/2-way valves (code N, K, H) cannot be used, as pressure is present at ports 3 and 5.
- No practical combination with a flow control plate possible.

Valve manifolds type 44 VTSA, ISO 15407-2/ISO 5599-2

Key features – Pneumatic components

Vertical stacking – Pressure regulator plate								
Code		Type	Width			Supply pressure		Description
			18 mm	26 mm	42 mm	6 bar	10 bar	
Pressure regulator plate for port 1 (P regulator)								
ZA	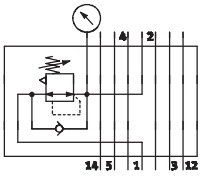	VABF-S4-...-R1C2-C-10	■	■	■	–	■	• Regulates the operating pressure in duct 1 upstream of the directional control valve
ZAY[1)]		VABF-S4-...-R1C2-C-10E	■	■	–	–	■	
ZF		VABF-S4-...-R1C2-C-6	■	■	■	■	–	
ZFY[1)]		VABF-S4-...-R1C2-C-6E	■	■	–	■	–	
Pressure regulator plate for port 2 (B regulator)								
ZC	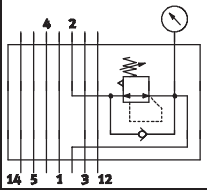	VABF-S4-...-R2C2-C-10	■	■	■	–	■	• Regulates the operating pressure in duct 2 downstream of the directional control valve
ZCY[1)]		VABF-S4-...-R2C2-C-10E	■	■	–	–	■	
ZH		VABF-S4-...-R2C2-C-10E	■	■	■	■	–	
ZHY[1)]		VABF-S4-...-R2C2-C-6E	■	■	–	■	–	
Pressure regulator plate for port 4 (A regulator)								
ZB[1)]	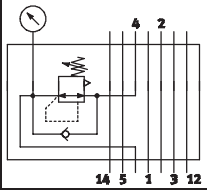	VABF-S4-...-R3C2-C-10	■	■	■	–	■	• Regulates the operating pressure in duct 4 downstream of the directional control valve
ZG[1)]		VABF-S4-...-R3C2-C-6	■	■	■	■	–	
Pressure regulator plate for ports 2 and 4 (AB regulator)								
ZD	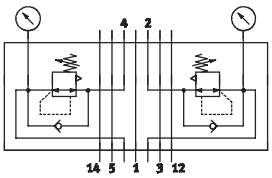	VABF-S4-...-R4C2-C-10	■	■	■	–	■	• Regulates the working pressure in ducts 2 and 4 downstream of the directional control valve
ZDY[1)]		VABF-S4-...-R4C2-C-10E	■	■	–	–	■	
ZI		VABF-S4-...-R4C2-C-6	■	■	■	■	–	**Note** These pressure regulator plates cannot be combined with reversible 2x 3/2-way valves (code P, Q, R).
ZIY[1)]		VABF-S4-...-R4C2-C-6E	■	■	–	■	–	
Pressure regulator plate for port 2, reversible (B regulator)								
ZL	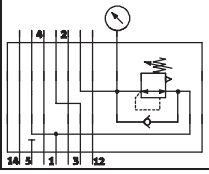	VABF-S4-...-R6C2-C-10	■	■	■	–	■	• Reversible pressure regulator for port 2
ZLY[1)]		VABF-S4-...-R6C2-C-10E	■	■	–	–	■	
ZN		VABF-S4-...-R6C2-C-6	■	■	■	■	–	
ZNY[1)]		VABF-S4-...-R6C2-C-6E	■	■	–	■	–	
Pressure regulator plate for port 4, reversible (A regulator)								
ZK[1)]	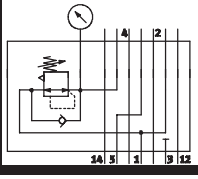	VABF-S4-...-R7C2-C-10	■	■	■	–	■	• Reversible pressure regulator for port 4
ZM[1)]		VABF-S4-...-R7C2-C-6	■	■	■	■	–	

1) Also suitable for symmetrical valves

Vertical stacking – Pressure regulator plate

Code		Type	Width 18 mm	Width 26 mm	Width 42 mm	Supply pressure 6 bar	Supply pressure 10 bar	Description
Pressure regulator plate for ports 2 and 4, reversible (AB regulator)								
ZE	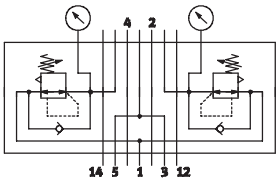	VABF-S4-...-R5C2-C-10	■	■	■	–	■	• Reversible pressure regulator for ports 2 and 4 • Pressure regulation upstream of the valve • Redirects the operating pressure from duct 1 to ducts 3 and 5 • Conducts the exhaust from duct 1 to ducts 3 and 5
ZEY[1]		VABF-S4-...-R5C2-C-10E	■	■	–	–	■	
ZJ		VABF-S4-...-R5C2-C-6	■	■	■	■	–	**Note** These pressure regulator plates cannot be combined with standard 2x 3/2-way valves (code N, K, H). Reversible 2x 3/2-way valves (code P, Q, R) must not be operated in a separate pressure zone in combination with these pressure regulators.
ZJY[1]		VABF-S4-...-R5C2-C-6E	■	■	–	■	–	

1) Also suitable for symmetrical valves

Vertical stacking – Flow control plate

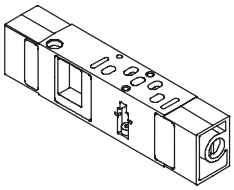

This plate is used for exhaust air flow control in ducts 3 and 5 of a valve in order to adjust the speed of the actuator.

Ducts 3 and 5 can be adjusted independently of each other.

Note

On reversible valve manifolds, supply air flow control takes place in ducts 3 and 5 upstream of the valve.

Code		Type	Width 18 mm	Width 26 mm	Width 42 mm	Description
X	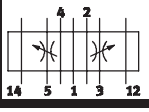	VABF-S4-...F1B1-C	■	■	■	• Restricts the exhaust downstream of the valve in ducts 3 and 5

Vertical stacking – Vertical pressure shut-off plate

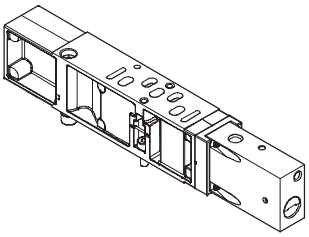

This plate enables a valve to be shut off from the supply pressure of the terminal. This means that the valve can be removed without shutting off the pressure.

Following activation of the shut-off, the exhaust air/return air from the cylinder is drawn off via the M5 Metric thread.

Note

It must be ensured that the operating pressure of the valve manifold lies within the range of the required pilot pressure (i.e. min. 3 bar).

Code		Type	Width 18 mm	Width 26 mm	Width 42 mm	Description
ZT	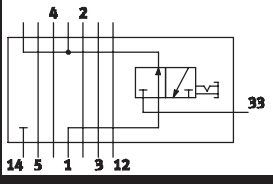	VABF-S4-...L1D1-C	■	■	■	• 2/2-way valve for shutting off the operating pressure at the valve position • Blocks ducts 12 and 14 for the valve position • Supplies the valve position with internal pilot air

Valve manifolds type 44 VTSA, ISO 15407-2/ISO 5599-2

Key features – Pneumatic components

Vertical stacking – Vertical supply plate

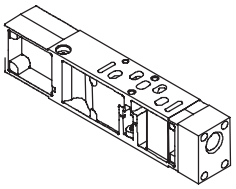

This plate enables a valve to be supplied with individual operating pressure independently of the operating pressure of the terminal.

Code		Type	Width			Description
			18 mm	26 mm	42 mm	
ZU	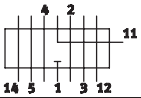	VABF-S4-...P1A3-...	■	■	■	• Plate with port 11 for supplying individual operating pressure to a valve position

Manifold sub-base

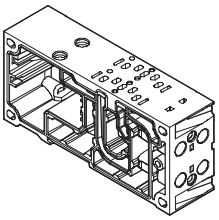

VTSA is based on a modular system which consists of manifold sub-bases and valves. Manifold sub-bases are available for valve width 18 mm and width 26 mm in a double grid, i.e. two valves per manifold sub-base. For width 42 mm there are manifold sub-bases with one valve per sub-base. The manifold sub-base contains a ducting seal and electrical linking. They can be freely mixed within a valve manifold.
The manifold sub-bases are screwed together and thus form the support system for the valves.
Inside the manifold sub-bases are the connection ducts for supplying compressed air to and venting from the valves on the terminal as well as the working ports for the pneumatic cylinders for each valve.
Each manifold sub-base is connected to the next using four screws. Individual terminal sections can be isolated and further manifold sub-bases inserted by loosening these screws. This ensures that the valve manifold can be rapidly and reliably extended.

Port patterns on the manifold sub-base

Width 18 mm

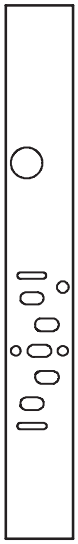

Width 26 mm

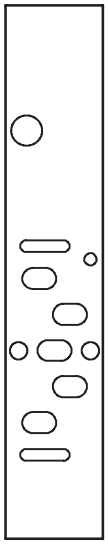

Width 42 mm

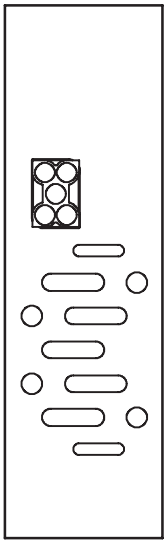

Note: All metric products can be used within inch tubing systems via hybrid fittings (➔ Overview on page 88)

Valve manifolds type 44 VTSA, ISO 15407-2/ISO 5599-2

Key features – Pneumatic components

90° connection plate for working ports (2 and 4) of the manifold sub-bases							
Code		Type	Width			Ports	Working ports (2, 4) on the 90° connection plate
			18 mm	26 mm	42 mm		
P	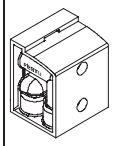	Metric thread: VABF-S4-...-A2G2-G... NPT thread: VABF-S4-...-A2G2-N...	■	■	■	2 and 4	Outlet at bottom • Connection sizes for 18 mm width: G⅛, ⅛NPT • Connection sizes for 26 mm width: G¼, ¼NPT • Connection sizes for 42 mm width: G⅜, ⅜NPT

Manifold sub-base variants							
Code		Type	Width			No. of valve positions/solenoid coils	Working ports (2, 4) on the manifold sub-base
			18 mm	26 mm	42 mm		
Manifold sub-base for multi-pin plug/fieldbus connection for double solenoid valves							
A AK	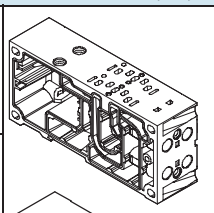	Metric thread: VABV-S4-2S-G18-2T2 NPT thread: VABV-S4-2S-N18-2T2	■	–	–	2/4	• Connection sizes for 18 mm width: G⅛, QS-G⅛-8, QS-G⅛-6, ⅛NPT, QS-⅛-5/16-U, QS-⅛-¼-U
B BK	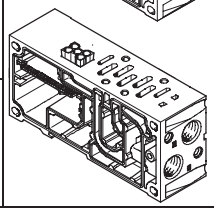	Metric thread: VABV-S4-1S-G14-2T2 NPT thread: VABV-S4-1S-N14-2T2	–	■	–	2/4	• Connection sizes for 26 mm width: G¼, QS-G¼-10, QS-G¼-8, ¼NPT, QS-¼-⅜-U, QS-¼-5/16-U
C CK		Metric thread: VABV-S2-1S-G38-T2 NPT thread: VABV-S2-1S-N38-T2	–	–	■	1/2	• Connection sizes for 42 mm width: G⅜ QS-G⅜-12, QS-G⅜-10, ⅜NPT, QS-⅜-⅜-U, QS-⅜-½-U
Manifold sub-base for multi-pin plug/fieldbus connection for single solenoid valves							
E EK	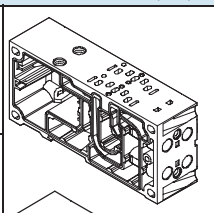	Metric thread: VABV-S4-2S-G18-2T1 NPT thread: VABV-S4-2S-N18-2T1	■	–	–	2/2	• Connection sizes for 18 mm width: G⅛, QS-G⅛-8, QS-G⅛-6, ⅛NPT, QS-⅛-5/16-U, QS-⅛-¼-U
F FK	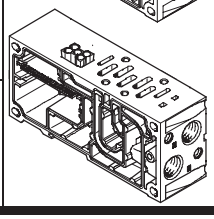	Metric thread: VABV-S4-1S-G14-2T1 NPT thread: VABV-S4-1S-N14-2T1	–	■	–	2/2	• Connection sizes for 26 mm width: G¼, QS-G¼-10, QS-G¼-8, ¼NPT, QS-¼-⅜-U, QS-¼-5/16-U
G GK		Metric thread: VABV-S2-1S-G38-T1 NPT thread: VABV-S2-1S-N38-T1	–	–	■	1/1	• Connection sizes for 42 mm width: G⅜ QS-G⅜-12, QS-G⅜-10, ⅜NPT, QS-⅜-⅜-U, QS-⅜-½-U

Note: All metric products can be used within inch tubing systems via hybrid fittings (➔ Overview on page 88)

Valve manifolds type 44 VTSA, ISO 15407-2/ISO 5599-2

Key features – Pneumatic components

Compressed air supply and venting

Right-hand end plate
- Code V

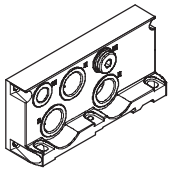

Right-hand end plate
- Code X

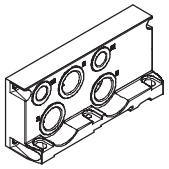

End plate with pilot air selector
- Code Y, U, Z, W

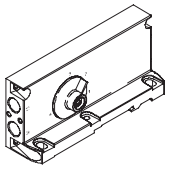

The valve manifold VTSA can be supplied with compressed air at one or more points. This is a reliable way of ensuring that all functional components will always offer good performance, even with large-scale expansions. The valve manifold is supplied via supply plates (max. 16 per terminal) or via an end plate.
Venting is via silencers or ports for ducted exhaust air
on the supply plates and/or on the right-hand end plate. There are two types of supply plates:
- Exhaust port 3/5 common
- Exhaust port 3/5 separated

Port configuration for supply plates
Exhaust port 3/5 separated
- Code K

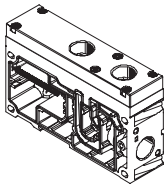

Port configuration for supply plates
Exhaust port 3/5 common
- Code L

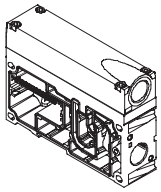

Pilot air supply

The port for the pneumatic supply is located on the supply plates or the right-hand end plate.
The ports differ for the following types of pilot air supply:
- Internal
- External

Internal pilot air supply
Internal pilot air supply can be selected if the working pressure is between 3 and 10 bar.
The pilot air supply is then branched from the compressed air supply 1 using an internal connection. Port 14 on the right-hand end plate is sealed with a blanking plug.

External pilot air supply
If the supply pressure is less than 3 bar, you must operate your VTSA valve manifold using external pilot air supply. The pilot air supply is then supplied via port 14 on the right-hand end plate. This is the case even if the valve manifold is operated with different pressure zones.

Note

If a gradual pressure build-up is required in the system by means of a soft-start valve, then external pilot air should be selected whereby the pilot pressure is already applied at the point of switch-on.

Right-hand end plate

Different right-hand end plates are available.

With the following two end plates, the outgoing direction of the ports is aligned with the horizontal stacking direction.
Right-hand end plates with pilot air supply/pilot exhaust air
- Internal pilot air supply: Code V
- External pilot air supply: Code X

For end plates with pilot air selector, the outgoing direction of the ports is to the front of the valve manifold. This means that all of the ports on the terminal can be combined in one outgoing direction. The special feature of the end plates with pilot air selector is the selector switch itself, which has four settings for different pilot air supply/pilot exhaust air.

End plates with pilot air selector switch set at the factory for:
- Internal pilot air supply: Code Y
- External pilot air supply: Code Z
- Internal pilot air supply, ducted pilot exhaust air: Code U
- External pilot air supply, ducted pilot exhaust air: Code W

Note

The end plate with pilot air selector must be used in combination with a supply plate.
The reversible 3/2-way valves (code P, Q, R) must only be operated in selector position 1 or 2.

Right-hand end plate with pilot air selector

Code	Selector position
Z	1
Y	2
W	3
U	4

Valve manifolds type 44 VTSA, ISO 15407-2/ISO 5599-2

Key features – Pneumatic components

Right-hand end plate						
Code	Type of compressed air supply and pilot air supply		Width			Description
			18 mm	26 mm	42 mm	
	Right-hand end plate					
V	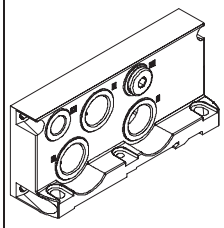	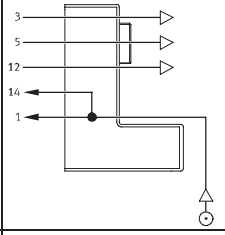	■	■	■	Internal pilot air supply, silencer • Pilot air supply is branched internally from port 1 • Port 14 is sealed with a blanking plug • Pilot exhaust port 3/5 and via silencer • For operating pressure in the range 3 … 10 bar • Pilot exhaust air[1)]
X	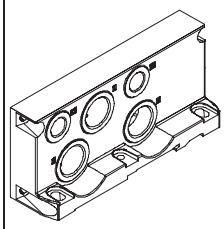	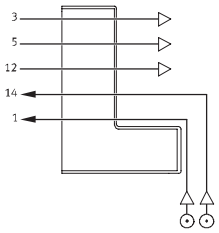	■	■	■	External pilot air supply, silencer • Pilot air supply between 2 and 10 bar is connected at port 14 • Pilot exhaust port 3/5 via silencer • For operating pressure in the range –0.9 … 10 bar (suitable for vacuum) • Pilot exhaust air[1)]
Code[2)]	End plate with pilot air selector					
Y (2)	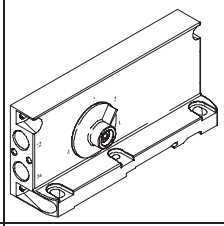	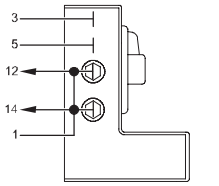	■	■	■	Internal pilot air supply • Pilot air supply is branched internally from port 1 • Ports 1/12/14 are internally connected • Ports 12/14 are sealed with blanking plugs • Pilot exhaust air not ducted via valve housing
U (4)	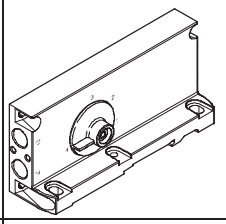	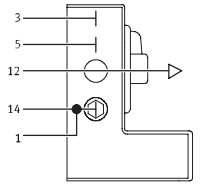	■	■	■	Internal pilot air supply, ducted exhaust air • Pilot air supply is branched internally from port 1 • Ports 1/14 are internally connected • Port 14 is sealed with a blanking plug • Pilot exhaust via port 12 with silencer[1)]
Z (1)	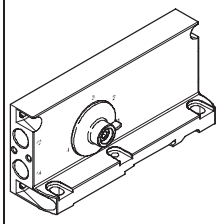	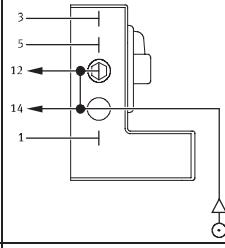	■	■	■	External pilot air supply • Pilot air supply is connected at port 14 • Port 12 is sealed with a blanking plug • Ports 12/14 are internally connected • Pilot exhaust air not ducted via valve housing
W (3)	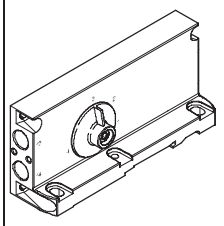	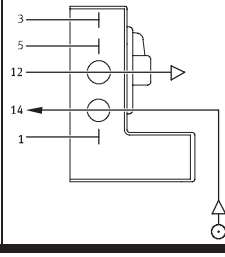	■	■	■	External pilot air supply, ducted exhaust air • Pilot air supply is connected at port 14 • Pilot exhaust via port 12 with silencer[1)]

1) Ducted pilot exhaust air is only possible with turned seals on the valve
2) Selector setting in brackets

Compressed air supply/duct separation

Additional supply plates can be used for larger terminals or to create additional pressure zones.
These can be selected at any point upstream or downstream of the manifold sub-bases.

Supply plates contain the ports:
- Compressed air supply (1)
- Exhaust port (3/5) common or separated

Depending on your order, the exhaust air ducts are either ducted or vented via silencers.

VTSA with ducted exhaust air:
With ducted exhaust air, venting can be via a supply plate or a right-hand end plate (code V or X).

If duct separation is required, there are three different options:
- Duct separation 1, 3, 5: code S
- Duct separation 1: code T
- Duct separation 3, 5: code R

If a combination of duct separation (S, T or R) and one or two supply plates is required, the following variants can be selected:
- Supply plate with duct separation on the left-hand side: code SU, TU, RU
- Supply plate with duct separation on the right-hand side: code US, UT, UR
- 2 supply plates with intermediate duct separation: code USU, UTU, URU

Supply plates

Code		Type	Width			Description
			18 mm	26 mm	42 mm	
U	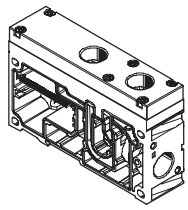	• Exhaust port 3/5 common for Metric thread: VABF-S6-10-P1A7-G12 for NPT thread: VABF-S6-10-P1A7-N12 • Exhaust port 3/5 separated for Metric thread: VABF-S6-10-P1A6-G12 for NPT thread: VABF-S6-10-P1A6-N12	■	■	■	Supply plate without duct separation (no R, S or T selected)
SU TU RU	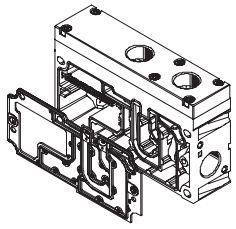		■	■	■	Supply plate with duct separation on left, if R, S or T selected
US UT UR	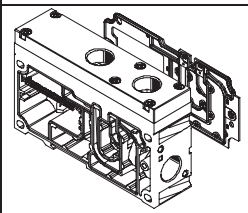		■	■	■	Supply plate with duct separation on right, if R, S or T selected
USU UTU URU	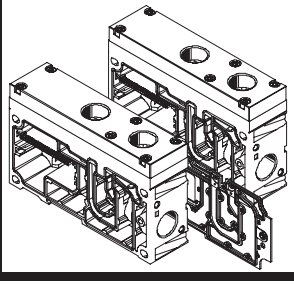		■	■	■	2 supply plates with duct separation in centre, if R, S or T selected

Note: All metric products can be used within inch tubing systems via hybrid fittings (➔ Overview on page 88)

Valve manifolds type 44 VTSA, ISO 15407-2/ISO 5599-2

Key features – Pneumatic components

Configuration of all pneumatic Metric threads							
Code[1]			Port		Designation	**Code M** Large push-in connector	**Code N** Small push-in connector
V	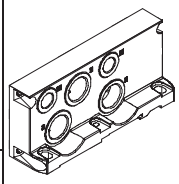	–	Right-hand end plate, internal pilot air supply, silencer				
			1	Supply air/vacuum supply	Push-in fitting	QS-G½-16	QS-G½-12
			3/5	Exhaust air	Via silencer	U-½-B	U-½-B
			14	Pilot air supply	Blanking plug	B-¼	B-¼
X			Right-hand end plate, external pilot air supply, silencer				
			1	Supply air/vacuum supply	Push-in fitting	QS-G½-16	QS-G½-12
			3/5	Exhaust air	Via silencer	U-½-B	U-½-B
			12	Pilot exhaust air	Via silencer	U-¼	U-¼
			14	Pilot air supply	Push-in fitting	QS-G¼-10	QS-G¼-8
Y (2)	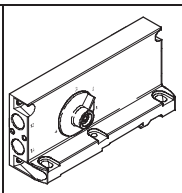	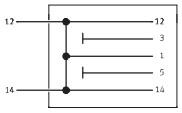	End plate with pilot air selector, internal pilot air supply				
			12	Pilot air supply	Blanking plug	B-¼	B-¼
			14	Pilot exhaust air	Push-in fitting	QS-G¼-10	QS-G¼-8
U (4)	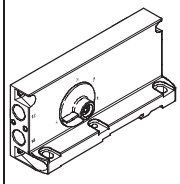	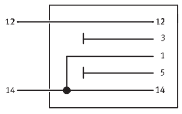	End plate with pilot air selector, internal pilot air supply, ducted exhaust air				
			12	Pilot air supply	Blanking plug	B-¼	B-¼
			14	Pilot exhaust air	Blanking plug	B-¼	B-¼
Z (1)	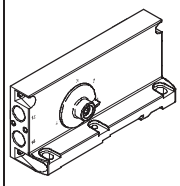	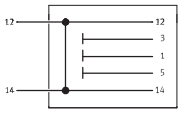	End plate with pilot air selector, external pilot air supply				
			12	Pilot air supply	Push-in fitting or silencer	QS-G¼-10 or U-¼	QS-G¼-8 or U-¼
			14	Pilot exhaust air	Push-in fitting	QS-G¼-10	QS-G¼-8
W (3)	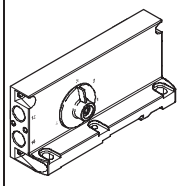	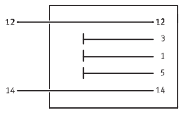	End plate with pilot air selector, external pilot air supply, ducted exhaust air				
			12	Pilot air supply	Push-in fitting or silencer	QS-G¼-10 or U-¼	QS-G¼-8 or U-¼
			14	Pilot exhaust air	Blanking plug	B-¼	B-¼

1) Selector setting in brackets

Note: All metric products can be used within inch tubing systems via hybrid fittings (➔ Overview on page 88)

Valve manifolds type 44 VTSA, ISO 15407-2/ISO 5599-2

Key features – Pneumatic components

Configuration of all pneumatic connections with NPT thread						
Code[1]			Port	Designation	**Code M** Large push-in connector	**Code N** Small push-in connector
V	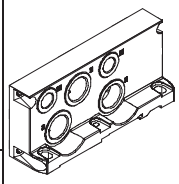	–	Right-hand end plate, internal pilot air supply, silencer			
			1 Supply air/vacuum supply	Push-in fitting	QS-½-⅝-U	QS-½-½-U
			3/5 Exhaust air	Via silencer	U-½-B-NPT	U-½-B-NPT
			14 Pilot air supply	Blanking plug	B-¼-NPT	B-¼-NPT
X			Right-hand end plate, external pilot air supply, silencer			
			1 Supply air/vacuum supply	Push-in fitting	QS-½-⅝-U	QS-½-½-U
			3/5 Exhaust air	Via silencer	U-½-B-NPT	U-½-B-NPT
			12 Pilot exhaust air	Via silencer	U-¼-B-NPT	U-¼-B-NPT
			14 Pilot air supply	Push-in fitting	QS-¼-⅜-U	QS-¼-5/16-U
Y (2)	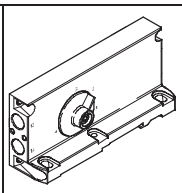	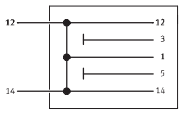	End plate with pilot air selector, internal pilot air supply			
			12 Pilot air supply	Blanking plug	B-¼-NPT	B-¼-NPT
			14 Pilot exhaust air	Push-in fitting	QS-¼-⅜-U	QS-¼-5/16-U
U (4)	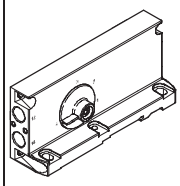	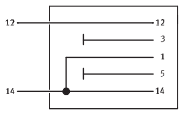	End plate with pilot air selector, internal pilot air supply, ducted exhaust air			
			12 Pilot air supply	Blanking plug	B-¼-NPT	B-¼-NPT
			14 Pilot exhaust air	Blanking plug	B-¼-NPT	B-¼-NPT
Z (1)	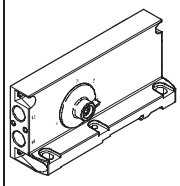	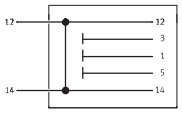	End plate with pilot air selector, external pilot air supply			
			12 Pilot air supply	Push-in fitting or silencer	QS-¼-⅜-U or U-¼-B-NPT	QS-¼-5/16-U or U-¼-B-NPT
			14 Pilot exhaust air	Push-in fitting	QS-¼-⅜-U	QS-¼-5/16-U
W (3)	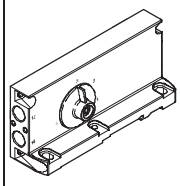	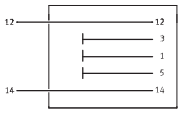	End plate with pilot air selector, external pilot air supply, ducted exhaust air			
			12 Pilot air supply	Push-in fitting or silencer	QS-¼-⅜-U or U-¼-B-NPT	QS-¼-5/16-U or U-¼-B-NPT
			14 Pilot exhaust air	Blanking plug	B-¼-NPT	B-¼-NPT

1) Selector setting in brackets

Note: All metric products can be used within inch tubing systems via hybrid fittings (➔ Overview on page 88)

Valve manifolds type 44 VTSA, ISO 15407-2/ISO 5599-2

Key features – Pneumatic components

Creation of pressure zones and separation of exhaust air

The valve manifold VTSA offers a number of options for creating pressure zones if different working pressures are required.
Pressure zones are created by isolating the internal supply ducts between the manifold sub-bases using appropriate duct separation.

Compressed air is supplied and vented via a supply plate.
The position of the supply plates and duct separations can be freely selected for VTSA.

Duct separations are integrated ex-works as per your order.
Duct separations can be distinguished by their coding, even when the valve manifold is assembled.

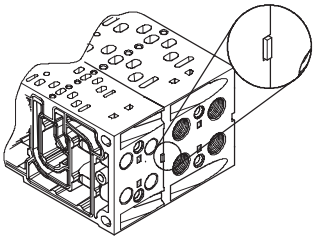

Creating pressure zones

Code	Separating seal		Width			Description
	Pictorial examples	Coding	18 mm	26 mm	42 mm	
T	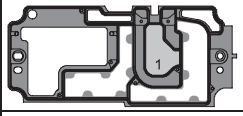		■	■	■	Duct 1 separated
S	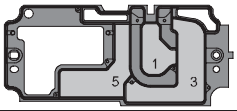		■	■	■	Duct 1 and 3/5 separated
R	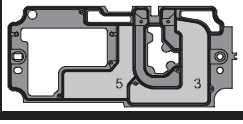		■	■	■	Duct 3/5 separated

Examples: Compressed air supply and pilot air supply, right-hand end plate

Internal pilot air supply, silencer/ducted exhaust air

Right-hand end plate: code V
The diagram opposite shows an example of the configuration and connection of the compressed air supply with internal pilot air supply. Port 14 on the right-hand end plate is tightly sealed. Exhaust port 3/5 is drawn off via the silencer.
Duct separations can be used optionally to create pressure zones.

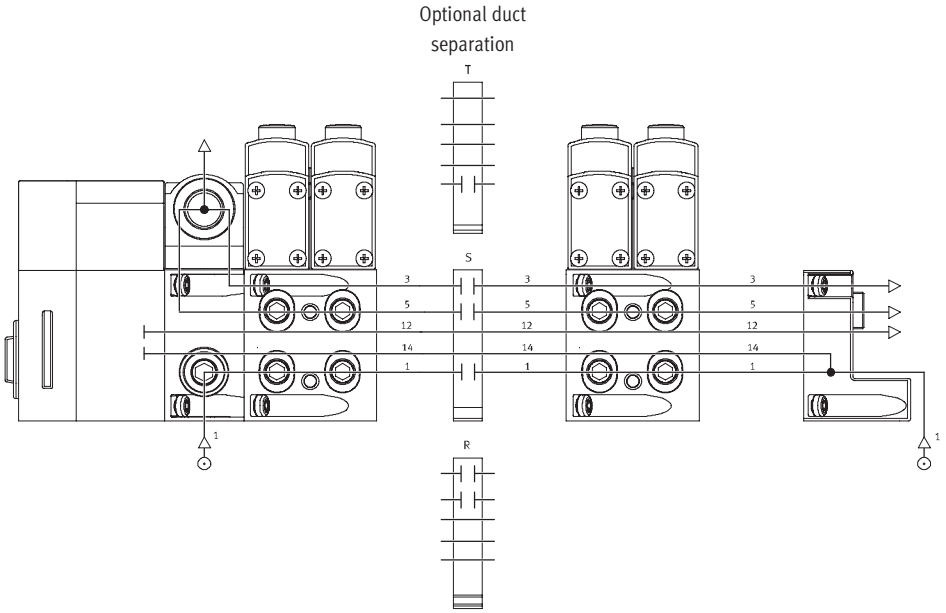

External pilot air supply, silencer/ducted exhaust air

Right-hand end plate: code X
The diagram opposite shows an example of the configuration and connection of the compressed air supply with external pilot air supply. Port 14 on the right-hand end plate is equipped with a fitting for this. Exhaust port 3/5 is drawn off via the silencer.
Duct separations can be used optionally to create pressure zones.

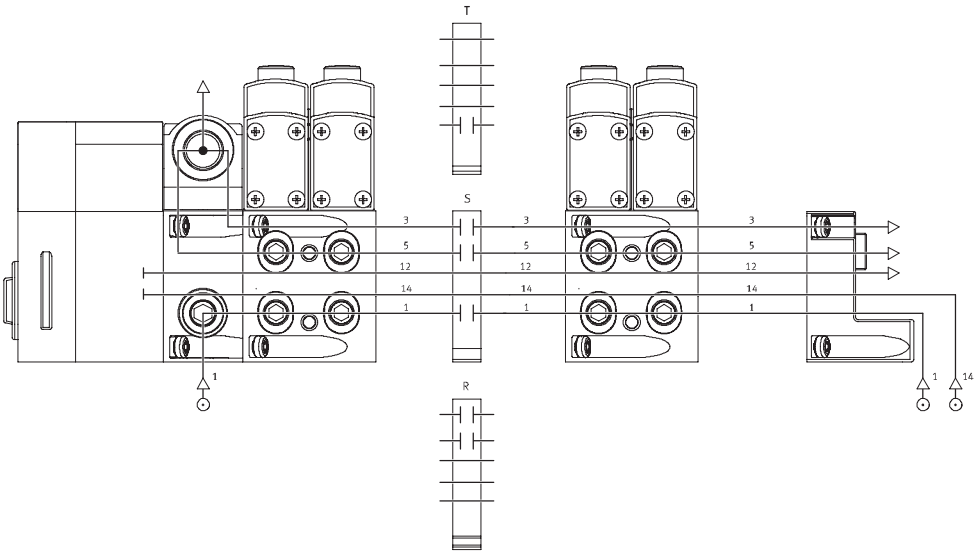

Examples: Compressed air supply and pilot air supply via right-hand end plate with pilot air selector

Internal pilot air supply, ducted exhaust air/silencer

Right-hand end plate: code Y, U
The diagram opposite shows an example of the configuration and connection of the compressed air supply with internal pilot air supply. Port 14 on the right-hand end plate is tightly sealed. Exhaust port 3/5 is ducted or drawn off via the silencer.
Duct separations can be used optionally to create pressure zones.

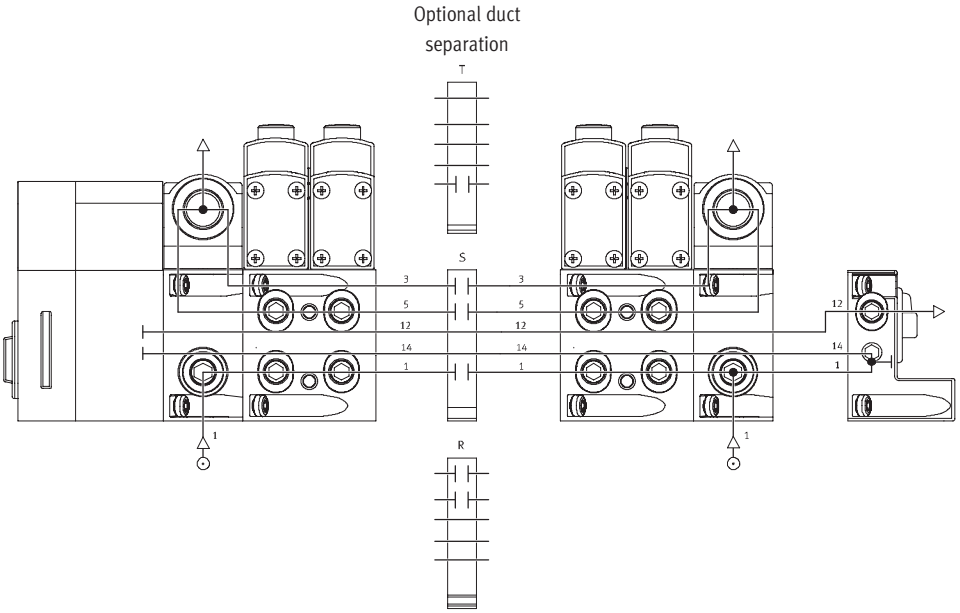

External pilot air supply, ducted exhaust air/silencer

Right-hand end plate: code Z, W
The diagram opposite shows an example of the configuration and connection of the compressed air supply with external pilot air supply. Port 14 on the right-hand end plate is equipped with a fitting for this. Exhaust port 3/5 is ducted or drawn off via the silencer.
Duct separations can be used optionally to create pressure zones.

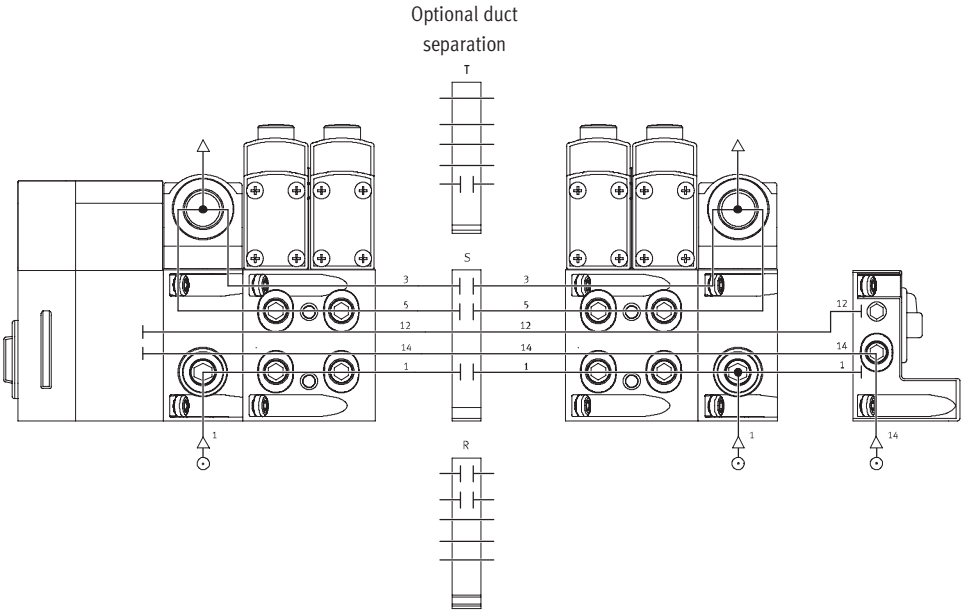

Valve manifolds type 44 VTSA, ISO 15407-2/ISO 5599-2

Key features – Pneumatic components

FESTO

Examples: Creating pressure zones

VTSA with CPX terminal connection

VTSA allows the creation of up to 16 pressure zones (up to 32 pressure zones if only size 1, ISO 5599-2, is fitted). The diagram shows an example for the configuration and connection of three pressure zones using duct separations – with internal pilot air supply.

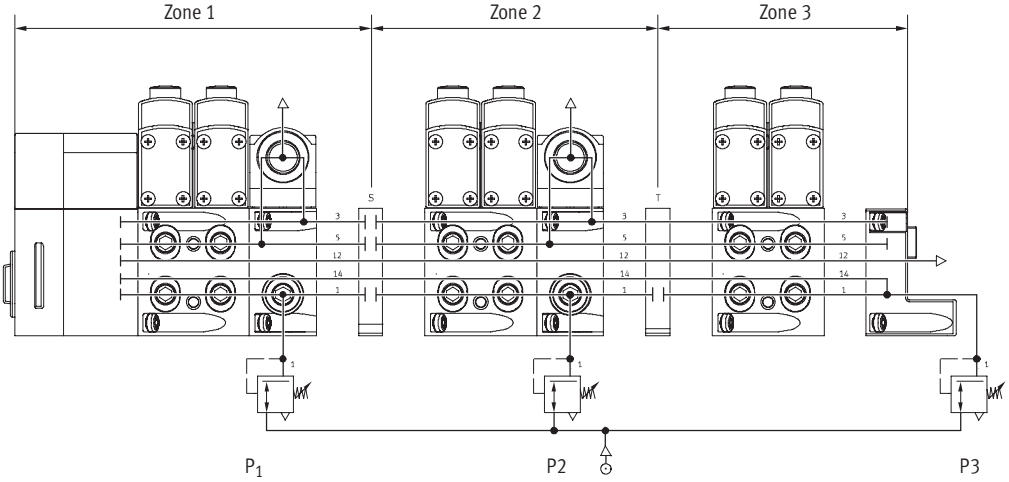

Soft-start valve

Valve

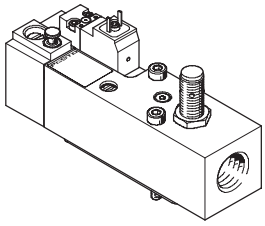

The soft-start valve is used for slow and gradual pressure build-up and quick venting of the supply pressure of the valve manifold. If a soft-start valve is used in a valve manifold, no additional elements supplying compressed air must be used in the same pressure zone.
The piston position of the soft-start valve is monitored by a sensor. This can be used to check whether the valve manifold compressed air supply is working. Pressure sensing via a pressure gauge (optional) is also possible.
The valve manifold can either be operated with internal pilot air supply via the soft-start valve or with internal or external pilot air supply via the different end plate variants. The type of pilot air supply is determined by the piston position of the valve seal of the soft-start valve. If internal pilot air supply via the soft-start valve is selected, there must be no additional pilot air supply (duct 14) within the valve manifold.
Exhaust air cannot be expelled via the soft-start valve. An exhaust plate is required for operation in a pressure zone with duct 1 and 3/5 separated.

Manifold sub-base

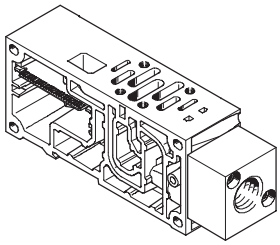

Modified manifold sub-bases (width 42 mm) are available for the soft-start valve. This manifold sub-base supplies the pressure zone on the valve manifold with compressed air and provides a high flow range. The pneumatic interface to ISO5599-1 is used here so that conventional individual sub-bases to ISO in combination with the soft-start valve can be used as an alternative to this manifold sub-base. Included with the manifold sub-base is a blanking plug for sealing ports on the end plate VABE-S6-1RZ-…. Depending on the position/pressure zone of the soft-start valve on the valve manifold and the use of internal or external pilot air supply, the ports of the end plate are sealed with blanking plugs.

Valve manifold assembly

Sturdy terminal mounting thanks to:

- Four through-holes for wall mounting
- Additional mounting bracket
- H-rail mounting

Wall mounting

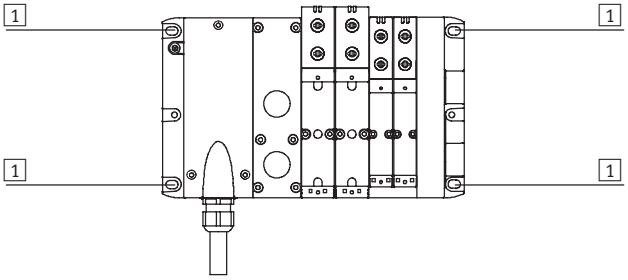

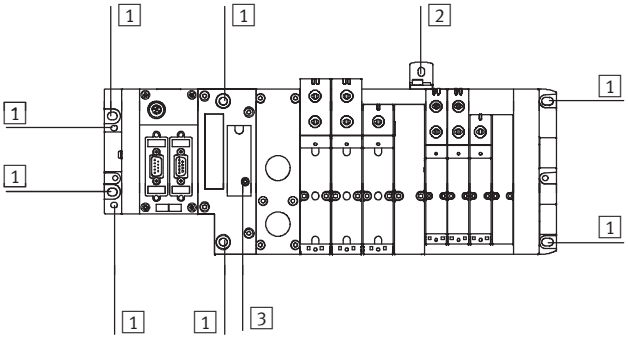

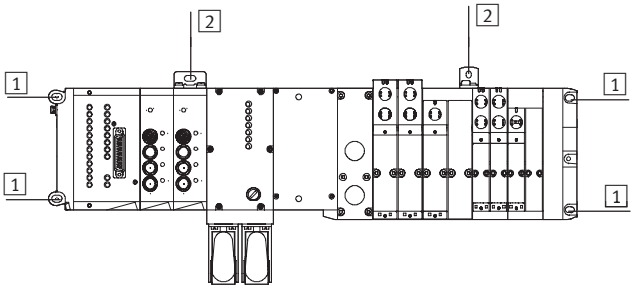

The VTSA valve manifold is screwed onto the mounting surface using M6 screws. The mounting holes are located at the following points:

- Multi-pin plug (4 pieces):
  2 each on the multi-pin connection block and the right-hand end plate
- Fieldbus, CPX (4 pieces):
  2 each on the left-hand (CPX) and right-hand (VTSA) end plate. The pneumatic interface additionally provides further mounting holes as well as optional mounting brackets.
- Fieldbus, electrical peripherals type 03 (4 pieces):
  2 each on the left-hand (type 03) and right-hand (VTSAVTSA-F) end plate. There are additionally optional mounting brackets available.

1 Hole for M6 screw
2 Hole for M5 screw
3 Hole for H-rail mounting

Note

When wall mounting valve manifolds with more than five manifold sub-bases, use additional mounting brackets of the type VAME-S...-10-W to prevent damage to the valve manifold. The mounting brackets are mounted on the pneumatic supply plates.
Use mounting brackets of the type IBGW-03 for the electrical part of the valve manifold VTSA-FB-03E.

H-rail mounting

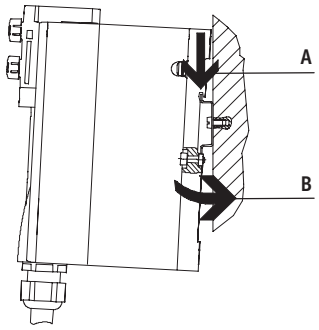

The VTSA valve manifold is hooked onto the H-rail (see arrow A).
The VTSA valve manifold is swivelled onto the H-rail and then secured with the clamping component (see arrow B).

For H-rail mounting of the valve manifold you will need the following VTSA mounting kit:

- With multi-pin plug:
  CPA-BG-NRH
- With fieldbus:
  CPX-CPA-BG-NRH

This permits mounting of the valve manifold on a H-rail to EN 60715.

Individual valve assembly

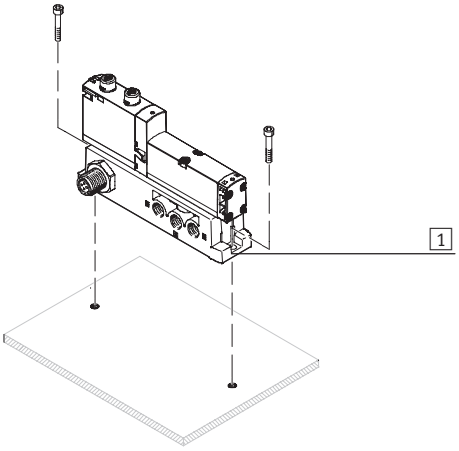

1 Vertical mounting holes

The individual sub-base for wall mounting is designed for integration into a system or machine. It is mounted vertically.

Display and operation

Each solenoid coil is allocated an LED which indicates its switching status.

- Indicator 12 shows the switching status of the pilot control for output 2
- Indicator 14 shows the switching status of the pilot control for output 4

Manual override

The manual override enables the valve to be switched when not electrically actuated or energised.

The valve is switched by pushing the manual override. The set switching status can also be locked by turning the manual override.

Alternatives:

- A cover cap (accessory code N) can be fitted over the manual override to prevent it from being turned. The valve can then only be actuated by pressing it.
- A cover (code V) can be fitted over the manual override to prevent it from being accidentally activated.

Pneumatic connection and control elements

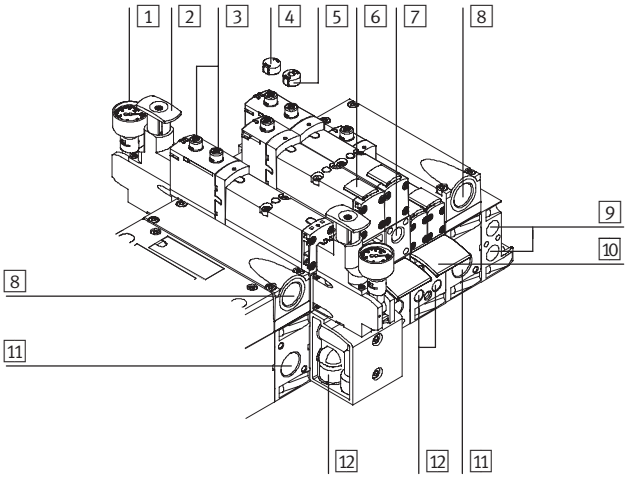

1 Pressure gauge (optional)
2 Adjusting knob for optional pressure regulator plate
3 Manual override (for each pilot solenoid coil, non-detenting or non-detenting/detenting)
4 Optional cover cap for manual override (prevents manual override)
5 Optional cover cap for manual override with non-detenting function
6 Inscription label holder for valve
7 Adjusting screw of optional flow control plate
8 Exhaust ports (valves) (3/5)
9 Pilot ports 12 and 14 for supplying the external pilot air
10 Inscription label holder for sub-base
11 Supply port 1 (operating pressure)
12 Working ports 2 and 4, for each valve position

Note

A manually actuated valve (manual override) cannot be reset electrically. Conversely, an electrically actuated valve cannot be reset using the mechanical manual override.

Electrical connection and display components

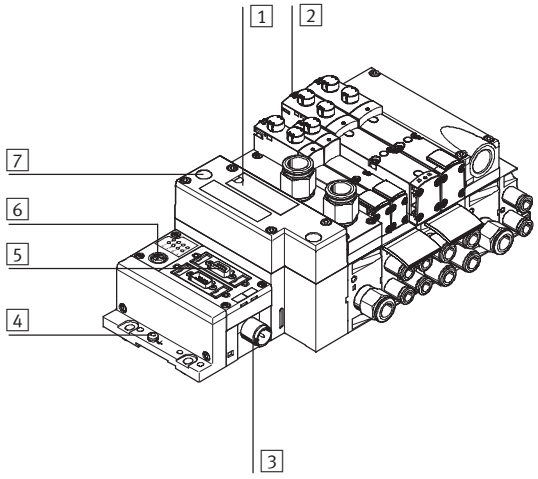

1 Inscription area and cover for H-rail mounting
2 Yellow LEDs: signal status display for pilot solenoid coils
3 Voltage supply connection
4 Earth terminal
5 Fieldbus connection (bus-specific)
6 Service interface for handheld unit, etc.
7 Red LED: common error display for valves

Manual override (MO)

MO with automatic return (non-detenting)

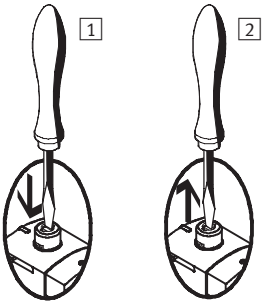

1 Press in the stem of the manual override using a pin or screwdriver. Valve is then switched.

2 Remove the pin or screwdriver. Spring force pushes the stem of the manual override back.
Valve returns to initial position (not with double solenoid valve code J).

MO set via turning (covered)

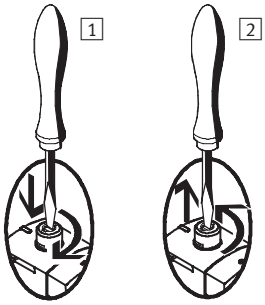

1 Press in the stem of the manual override using a pin or screwdriver until the valve switches and then turn the stem clockwise by 90° until the stop is reached.
Valve remains switched.

2 Turn the stem anti-clockwise by 90° until the stop is reached and then remove the pin or screwdriver. Spring force pushes the stem of the manual override back. Valve returns to initial position (not with double solenoid valve code J and D).

Inscription system

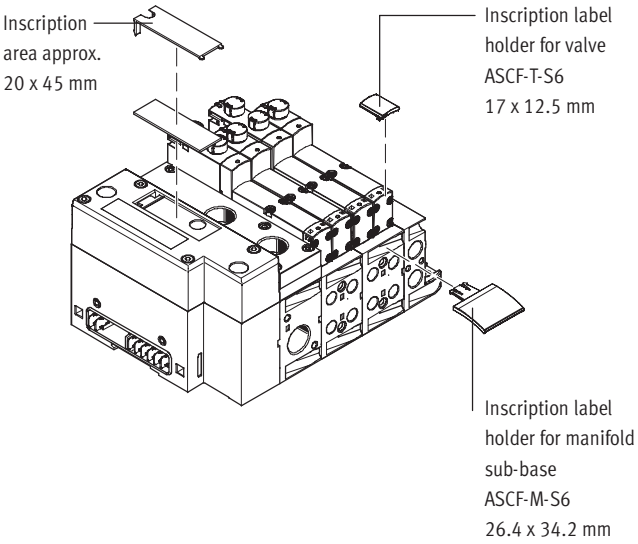

Inscription label holders can be applied to the valves and manifold sub-bases to identify them. These inscription label holders can be ordered by entering the code B or T in the order code for accessories.
Scope of delivery: inscription label holder including inscription label.
The following inscription labels can be used as spares:

- Inscription label holder for valve type ASCF-T-S6: Part-No. 540 888
- Inscription label holder for manifold sub-base type ASCF-M-S6: Part No. 540 889

Large inscription labels can be attached to the pneumatic interface as an alternative or in addition to the smaller labels.

Valve manifolds type 44 VTSA, ISO 15407-2/ISO 5599-2

Key features – Electrical components

Protective circuit

Each VTSA solenoid coil is protected with a spark arresting protective circuit as well as against polarity reversal.

24 V DC version

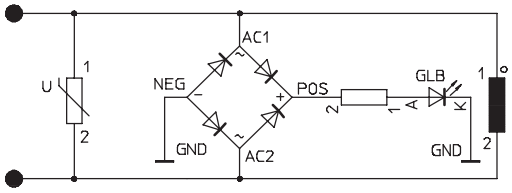

110 V AC version

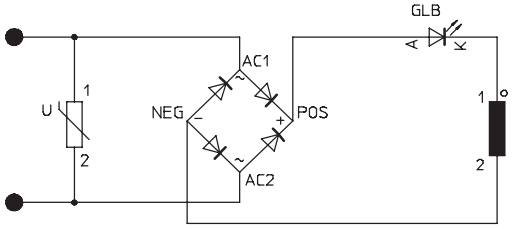

Individual valve

Valves can also be used on individual sub-bases for actuators further away from the valve manifold.

- Electrical M12 connector, 4 pin
  24 V DC
- 4-pin clamped terminal connection for configuration by the user
  24 V DC or 110 V AC

Individual electrical connection

A maximum of 20 solenoid coils can be actuated. 2 solenoid coils per valve can be addressed.

- Individual electrical connection M12
  6-way or 10-way
  5-pin
  24 V DC

Electrical multi-pin plug connection

The following multi-pin plug connection variants are offered for the valve manifold VTSA:

- Sub-D multi-pin plug connection (37-pin for 24 V DC): This valve manifold is available with 1 … 16 valve positions equipped with double solenoid valves and 1 … 32 valve positions equipped with single solenoid valves. A maximum of 32 solenoid coils can be actuated.
- Terminal box (terminal strip for 24 V DC or 110 V AC): This valve manifold is available with 1 … 16 valve positions equipped with double solenoid valves and 1 … 32 valve positions equipped with single solenoid valves.
  A maximum of 32 solenoid coils can be actuated.
- Multi-pin node (round plug connector): Electrical multi-pin plug connection with round plug connector, 19-pin to CNOMO E03.62.530.N, connectinMetric thread M23 for 24 V DC. The valve manifold can be equipped with max. 16 solenoid coils.

The valves are switched by means of positive or negative logic (PNP or NPN). Mixed operation is not permitted.

Each pin on the Sub-D multi-pin plug or terminal box (terminal strip) can actuate exactly one solenoid coil. If the maximum configurable number of valve positions is 32, this means that 32 valves, each with a single solenoid coil, can be addressed.
With 16 or less valve positions, 2 solenoid coils per valve can be addressed.

Note

Use the following 37-pin connecting cables from Festo to connect the valve manifold VTSA with Sub-D multi-pin plug connection:

- NEBV-S1W37-…-LE10
  for max. 8 solenoid coils
- NEBV-S1W37-…-LE26
  for max. 22 solenoid coils
- NEBV-S1W37-…-LE37
  for max. 32 solenoid coils
- NECV-S1W37 pre-assembled plug connector

Fieldbus connection/control block

All functions and features of the electrical peripherals CPX are permitted in connection with the CPX interface. This means:

- The valves and electrical outputs are supplied via the operating voltage connection CPX
- The valves are supplied and switched off independently via a separate port on the CPX

Note

Further information can be found here:
➔ Internet: cpx

Pin allocation – Sub-D plug socket, 24 V DC; electrical connection code MP1

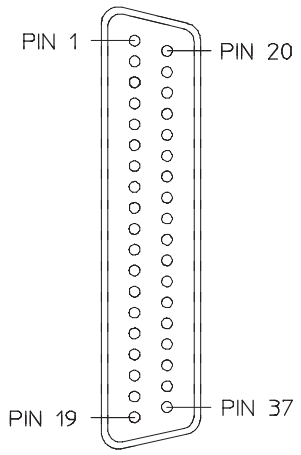

Pin[2]	Address/coil	Wire colour[1]		Pin[2]	Address/coil	Wire colour[1]
1	0	WH		17	16	WH PK
2	1	BN		18	17	PK BN
3	2	GN		19	18	WH BU
4	3	YE		20	19	BN BU
5	4	GY		21	20	WH RD
6	5	PK		22	21	BN RD
7	6	BU		23	22	GY GN
8	7	RD		24	23	YE GY
9	8	GY PK		25	24	PK GN
10	9	RD BU		26	25	YE PK
11	10	WH GN		27	26	GN BU
12	11	BN GN		28	27	YE BU
13	12	WH YE		29	28	GN RD
14	13	YE BN		30	29	YE RD
15	14	WH GY		31	30	GN BK
16	15	GY BN		32	31	GY BU
Conductor						
33	0 V[3]	YE BK		35	0 V[3]	BN BK
34	0 V[3]	WH BK		36	0 V[3]	BK
Earthing						
37	FE	VT		–	–	–

Note

The drawing shows the view on the Sub-D plug socket at the multi-pin cable NEBV-S1W37-....

1) To IEC 757
2) Pin 9 ... 35: Not allocated with cable NEBV-S1-W37-...-LE10
   Pin 23 ... 33: Not allocated with cable NEBV-S1-W37-...-LE26
3) 0 V for positive switching control signals; connect 24 V for negative switching control signals; mixed operation is not permitted.

Dimensions Download CAD Data ➔ **www.festo.com/us/cad**

Connecting cable NEBV-S1W37-...

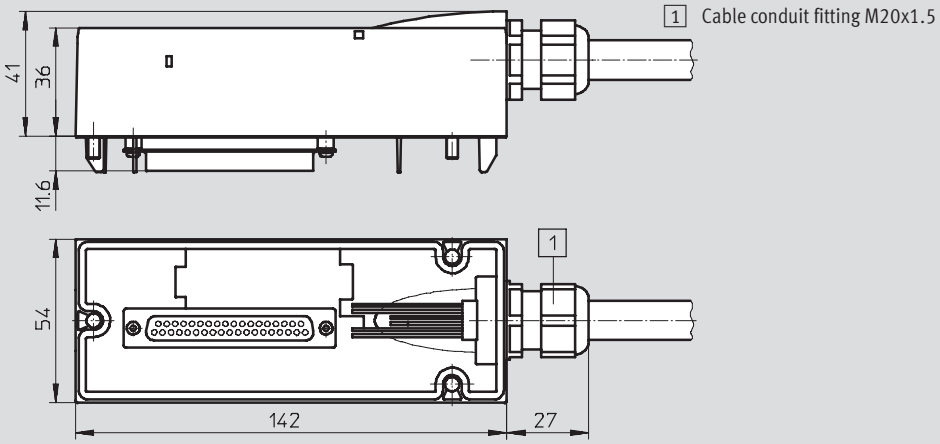

The wire colours refer to the following pre-assembled multi-pin cables from Festo:

- NEBV-S1W37-...-10 for valve manifold with max. 8 solenoid coils
- NEBV-S1W37-...-26 for valve manifold with max. 22 solenoid coils
- NEBV-S1W37-...-37 for valve manifold with max. 32 solenoid coils

Sub-D plug, 24 V DC; electrical connection code MP1					
Type	Sheath	Length [m]	Wire x mm² [mm²]	Cable ∅ [mm]	Part No.
NEBV-S1W37-E2,5-LE10	Polyurethane	2.5	10 x 0.34	7.7	**539 240**
NEBV-S1W37-E5-LE10		5			**539 241**
NEBV-S1W37-E10-LE10		10			**539 242**
NEBV-S1W37-E2,5-LE26		2.5	26 x 0.34	11.5	**539 243**
NEBV-S1W37-E5-LE26		5			**539 244**
NEBV-S1W37-E10-LE26		10			**539 245**
NEBV-S1W37-K2,5-LE37		2.5	37 x 0.34	13	**539 246**
NEBV-S1W37-K5-LE37		5			**539 247**
NEBV-S1W37-K10-LE37		10			**539 248**
NEBV-S1W37-KM-2,5-LE10	Polyvinyl chloride	2.5	10 x 0.34	7.7	**543 271**
NEBV-S1W37-KM-5-LE10		5			**543 272**
NEBV-S1W37-KM-10-LE10		10			**543 273**
NEBV-S1W37-KM-2,5-LE27		2.5	27 x 0.34	11.5	**543 274**
NEBV-S1W37-KM-5-LE27		5			**543 275**
NEBV-S1W37-KM-10-LE27		10			**543 276**
NEBV-S1W37-KM-2,5-LE37		2.5	37 x 0.34	13	**543 277**
NEBV-S1W37-KM-5-LE37		5			**543 278**
NEBV-S1W37-KM-10-LE37		10			**543 279**

Pin allocation – Multi-pin terminal strip (Cage Clamp®), 24 V DC and 110 V AC; electrical connection code T

Each solenoid coil must be assigned to a specific terminal on the terminal strip in order for actuation of the valves to take place.

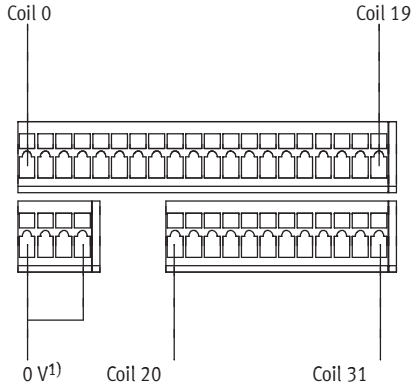

Terminal	Coil/address		Terminal	Coil/address
1	0		17	16
2	1		18	17
3	2		19	18
4	3		20	19
5	4		21	20
6	5		22	21
7	6		23	22
8	7		24	23
9	8		25	24
10	9		26	25
11	10		27	26
12	11		28	27
13	12		29	28
14	13		30	29
15	14		31	30
16	15		32	31
Conductor				
33	0 V		35	0 V
34	0 V		36	0 V

Note

The drawing shows the view onto the multi-pin terminal strip (Cage Clamp®).

1) 0 V for positive switching control signals; connect 24 V for negative switching control signals; mixed operation is not permitted.

Pin allocation – Round plug connector, 24 V DC; electrical connection code MP4					
	Address	Pin[1)]		Address	Pin[1)]
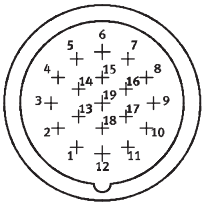	0	15		8	17
	1	7		9	9
	2	5		10	2
	3	4		11	13
	4	16		12	11
	5	8		13	10
	6	3		14	1
	7	14		15	18

1) Pin 6: 0 V for positive switching control signals; connect 24 V for negative switching control signals; mixed operation is not permitted.
Pin 12: Earth
Pin 19: Unused

Rules for addressing

- Address allocation does not depend on whether single or double solenoid valves are fitted.
- Addresses are allocated in ascending order without gaps, from left to right.
- A valve position for actuating one solenoid coil occupies one address (type VABV-...-...T1).
- A valve position for actuating two solenoid coils occupies two addresses (type VABV-...-...T2). The following allocation applies in this case:
  - Coil 14: Lower-value address
  - Coil 12: Higher-value address

Pin allocation – Round plug connector, 24 V DC; electrical connection – CNOMO allocation					
	Pin	Valve position/ solenoid coil		Pin	Valve position/ solenoid coil
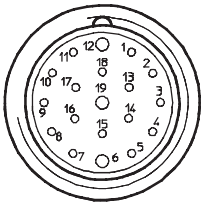	1	8/14		10	7/12
	2	6/14		11	7/14
	3	4/14		12	FE
	4	2/12		13	6/12
	5	2/14		14	4/12
	6	0 V[1)]		15	1/14
	7	1/12		16	3/14
	8	3/12		17	5/14
	9	5/12		18	8/12
				19	Unused

1) 0 V for positive switching control signals; connect 24 V for negative switching control signals; mixed operation is not permitted.

Electrical connection, individual valve 24 V DC

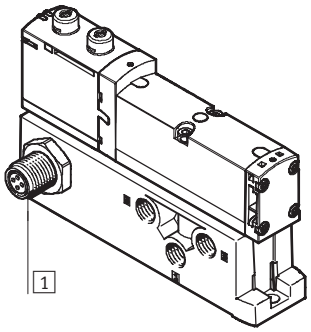

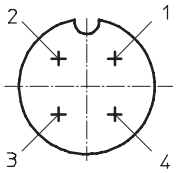

1 Connector plug M12x1, 4-pin to EN 61076-2-101

Pin allocation M12 on individual valve to ISO 20401

With positive logic:

Pin1 – Unused
Pin2 – V_B for coil 12
Pin3 – 0 V for coil 12 and 14
Pin4 – V_B for coil 14

With negative logic:

Pin1 – Unused
Pin2 – 0 V for coil 12
Pin3 – V_B for coil 12 and 14
Pin4 – 0 V for coil 14

Electrical connection, individual valve 24 V DC or 110 V AC

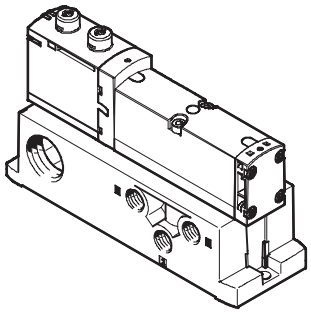

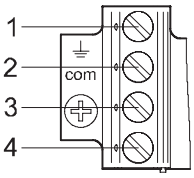

Pin allocation for assembly by the user

With positive logic:

Pin1 – Unused (with 110 V AC connection for earthing)
Pin2 – V_B for coil 12
Pin3 – 0 V for coil 12 and 14
Pin4 – V_B for coil 14

With negative logic:

Pin1 – Unused
Pin2 – 0 V for coil 12
Pin3 – V_B for coil 12 and 14
Pin4 – 0 V for coil 14

Individual electrical connection, 6-way or 10-way, 24 V DC, code MP2/MP3 for valve manifold

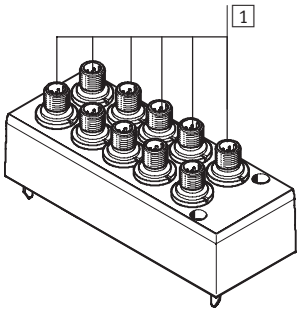

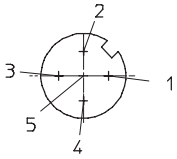

1 Connector plug M12x1, 5-pin

Pin allocation M12

Pin1 – Unused
Pin2 – V_B for coil 12
Pin3 – 0 V for coil 12 and 14
Pin4 – V_B for coil 14
Pin5 – Functional earth

Valve manifolds type 44 VTSA, ISO 15407-2/ISO 5599-2

Key features – Electrical components

Electrical connection technology				
	Electrical connection	Type of mounting/cable length	Type	Part No.
Plug socket for connecting individual valves				
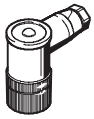	Angled plug socket, 4-pin, screw terminal	Union nut M12	**SEA-M12-4WD-PG7**	**185 498**
Plug socket with cable for connecting individual valves				
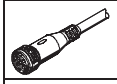	Straight socket, 4-pin, M12	5 m	**SIM-M12-4GD-5-PU**	**164 259**
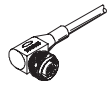	Angled socket, 4-pin, M12	5 m	**SIM-M12-4WD-5-PU**	**164 258**
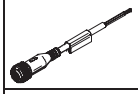	Straight socket, 5-pin, M12	5 m	**NEBU-M12G5-K-5-LE3**	**541 364**
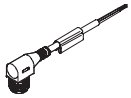	Angled socket, 5-pin, M12	5 m	**NEBU-M12W5-K-5-LE3**	**541 370**
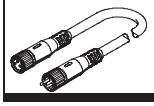	Modular system for connecting cables	–	**NEBU-...** ➔ Internet: nebu	**–**

System equipment

Operate system equipment with unlubricated compressed air if possible. Festo valves and cylinders are designed so that, if used as designated, they will not require additional lubrication and will still achieve a long service life.
The quality of compressed air downstream from the compressor must correspond to that of unlubricated compressed air. If possible, do not operate all of your system equipment with lubricated compressed air. The lubricators should, where possible, always be installed directly upstream of the actuator used.

Unsuitable additional oil and an excessive oil content in the compressed air reduce the service life of the valve manifold.
Use Festo special oil OFSW-32 or the alternatives listed in the Festo catalogue (as specified in DIN 51524 HLP32; basic oil viscosity 32 CST at 40 °C).

Bio-oils
When using bio-oils (oils which are based on synthetic or native ester, e.g. rapeseed oil methyl ester), the maximum residual oil content of 0.1 mg/m^3 must not be exceeded (see ISO 8573-1 Class 2).

Mineral oils
When using mineral oils (e.g. HLP oils to DIN 51524, parts 1 through 3) or similar oils based on poly-alpha-olefins (PAO), the maximum residual oil content of 5 mg/m^3 must not be exceeded (see ISO 8573-1 Class 4).
A higher residual oil content irrespective of the compressor oil cannot be permitted, as the basic lubricant would be flushed out over time.

Valve manifolds type 44 VTSA, ISO 15407-2/ISO 5599-2

Technical data

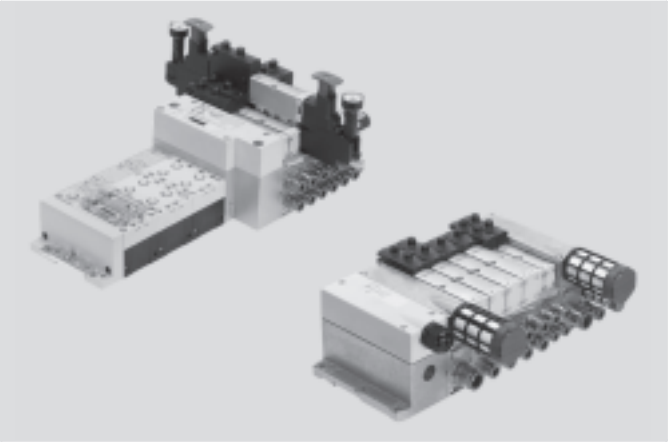

Flow rate

Width 18 mm:
Up to 550 l/min
Width 26 mm:
Up to 1,100 l/min
Width 42 mm:
Up to 1,500 l/min

Valve width

02: 18 mm
01: 26 mm
1: 42 mm

Voltage

24 V DC
110 V AC

General technical data							
Constructional design		Electromagnetically actuated piston spool valve					
Lubrication		Lubricated for life					
Type of mounting		Wall mounting					
		On H-rail to EN 60715					
Mounting position		Any					
Manual override		Non-detenting, non-detenting/detenting, covered					
Width		18 mm		26 mm		42 mm	
Pneumatic connections		Metric thread	NPT thread	Metric thread	NPT thread	Metric thread	NPT thread
Pneumatic connection		Via manifold sub-base					
Supply port	1	G½, QS-G½-12, QS-G½-16	½NPT, QS-½-½-U, QS-½-⅝-U	G½, QS-G½-12, QS-G½-16	½NPT, QS-½-½-U, QS-½-⅝-U	G½, QS-G½-12, QS-G½-16	½NPT, QS-½-½-U, QS-½-⅝-U
Exhaust port	3/5	G½, QS-G½-12, QS-G½-16	½NPT, QS-½-½-U, QS-½-⅝-U	G½, QS-G½-12, QS-G½-16	½NPT, QS-½-½-U, QS-½-⅝-U	G½, QS-G½-12, QS-G½-16	½NPT, QS-½-½-U, QS-½-⅝-U
Working ports	2/4	Depending on the connection type selected					
		• G⅛ • QS-G⅛-6 • QS-G⅛-8	• ⅛NPT • QS-⅛-¼-U • QS-⅛-5/16-U	• G¼ • QS-G¼-8 • QS-G¼-10	• ¼NPT • QS-¼-5/16-U • QS-¼-⅜-U	G⅜ QS-G⅜-12, QS-G⅜-10	⅜NPT, QS-⅜-⅜-U, QS-⅜-½-U
External pilot air supply port	14	G¼	¼NPT	G¼	¼NPT	G¼	¼NPT
Pilot exhaust air port	12	G¼	¼NPT	G¼	¼NPT	G¼	¼NPT

Note: This product conforms with the ISO 1179-1 standard and the ISO 228-1 standard.

Note: All metric products can be used within inch tubing systems via hybrid fittings (➔ Overview on page 88)

Valve manifolds type 44 VTSA, ISO 15407-2/ISO 5599-2

Technical data

Standard nominal flow rate [l/min]													
Valve function order code	M	O	J	D	N	K	H	B	G	E	P	Q	R
Width 18 mm													
Flow rate of valve	750				600			700[1)] 430[2)]			600		
Flow rate of valve on individual sub-base	600				500			550[1)] 360[2)]			500		
Flow rate of valve on valve manifold	550				400			450[1)] 300[2)]			400		
Width 26 mm													
Flow rate of valve	1,400				1,250			1,400[1)] 1,000[2)]			1,250		
Flow rate of valve on individual sub-base	1,200				1,100			1,200[1)] 850[2)]			1,000		
Flow rate of valve on valve manifold	1,100				900			1,000[1)] 700[2)]			900		
Width 42 mm													
Flow rate of valve	1,800				1,400			1,700[1)] 750[2)]			1,400		
Flow rate of valve on individual sub-base	1,300				1,200			1,200[1)] 800[2)]			1,200		
Flow rate of valve on valve manifold	1,500				1,200			1,400[1)] 800[2)]			1,200		

1) Switching position
2) Mid-position

Operating and environmental conditions														
Valve function order code		M	O	J	D	N	K	H	B	G	E	P	Q	R
Operating medium		Filtered compressed air, lubricated or unlubricated, inert gases ➔ 48												
Grade of filtration	[µm]	40 (average pore size)												
Operating pressure	[bar]	–0.9 … +10				3 … 10			–0.9 … +10					
Operating pressure for valve manifold with internal pilot air supply	[bar]	3 … 10												
Pilot pressure	[bar]	3 … 10												
Ambient temperature	[°C]	–5 … +50												
Temperature of medium	[°C]	–5 … +50												
Storage temperature[1)]	[°C]	–20 … +40												
CE mark (see declaration of conformity)		To EU Low Voltage Directive												
Relative air humidity	[%]	90												

1) Long-term storage

Pilot pressure p12/14 as a function of operating pressure p1

for 3/2-way valves

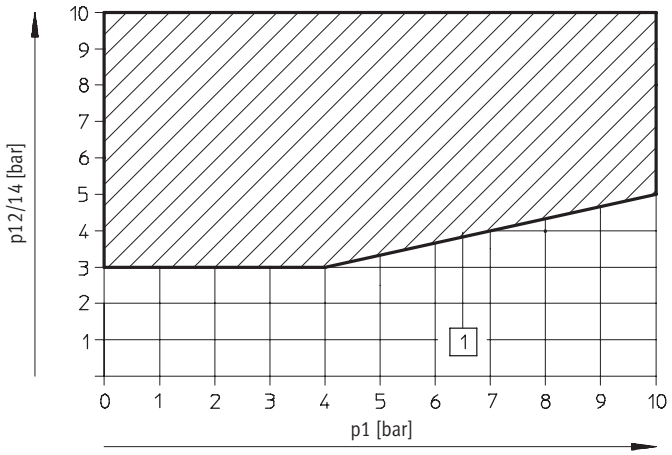

1 Operating range for valves with external pilot air supply

Valve switching times [ms]

Valve function order code		M	O	J	D	N	K	H	B	G	E	P	Q	R
18 mm														
Switching times	on	22	12	–	–	12	12	12	15	15	15	25	25	25
	off	28	38	–	–	30	30	30	44	44	44	12	12	12
	changeover	–	–	11	11	–	–	–	–	–	–	–	–	–
26 mm														
Switching times	on	25	20	–	–	20	20	20	22	22	22	32	32	32
	off	45	65	–	–	38	38	38	65	65	65	30	30	30
	changeover	–	–	18	18	–	–	–	–	–	–	–	–	–
42 mm														
Switching times	on	27	22	–	–	20	20	20	22	22	22	34	34	34
	off	45	60	–	–	38	38	38	65	65	65	28	28	28
	changeover	–	–	16	16	–	–	–	–	–	–	–	–	–

Flow rate qn as a function of output pressure p2 with pressure regulator plates (P regulator plate) for port 1

Width 18 mm

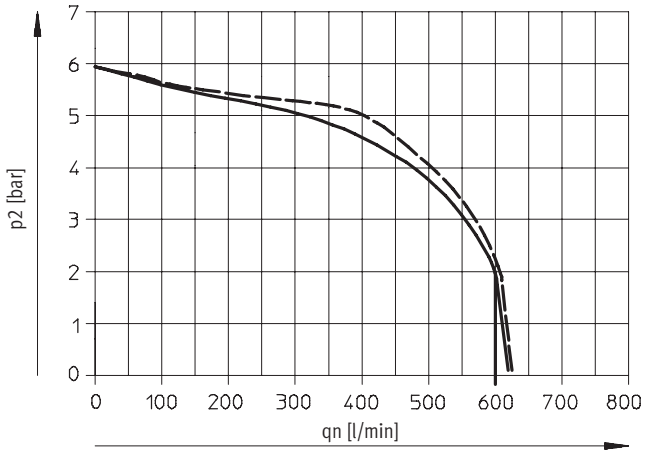

— — — 6 bar

——— 10 bar

Width 26 mm

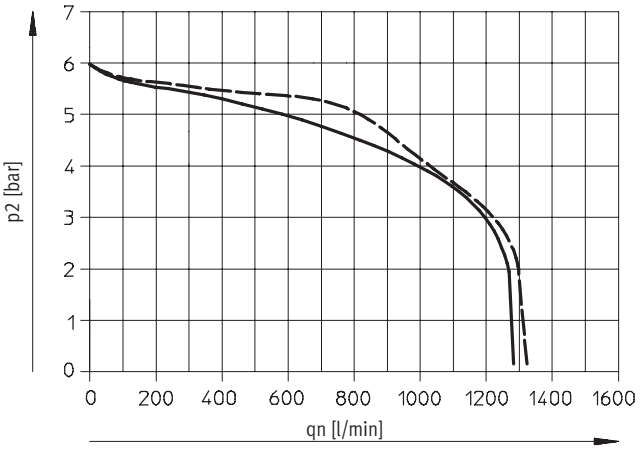

— — — 6 bar

——— 10 bar

Flow rate qn as a function of output pressure p2 with pressure regulator plates (AB regulator plates) for port 2, 4 or ports 4/2

Width 18 mm

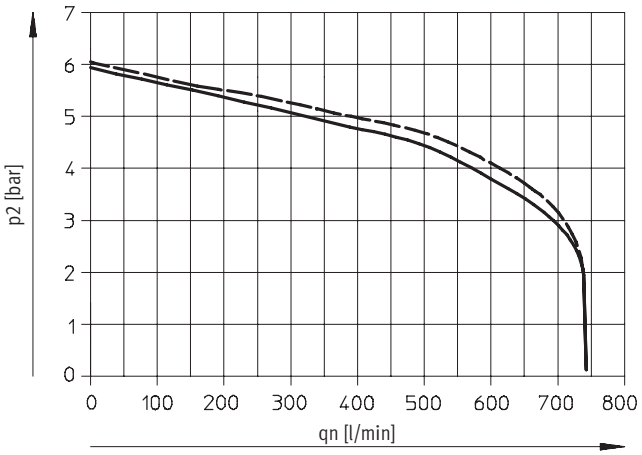

6 bar
10 bar

Width 26 mm

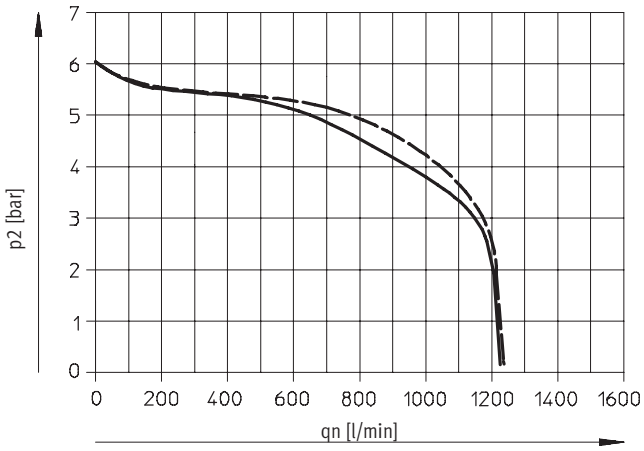

6 bar
10 bar

Flow rate qn as a function of output pressure p2 with pressure regulator plates (AB regulator plates, rev.) for ports 4/2, reversible

Width 18 mm

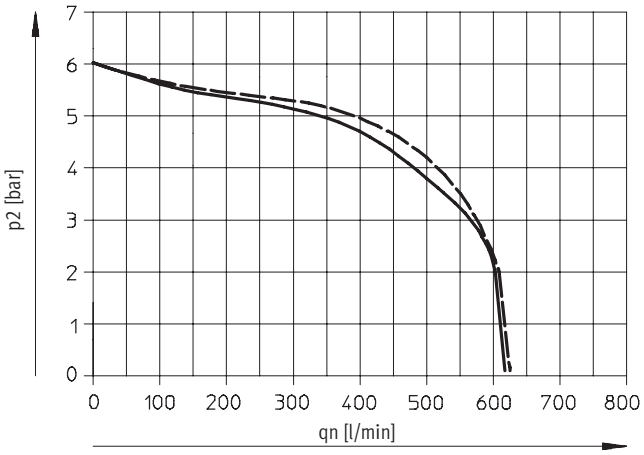

6 bar
10 bar

Width 26 mm

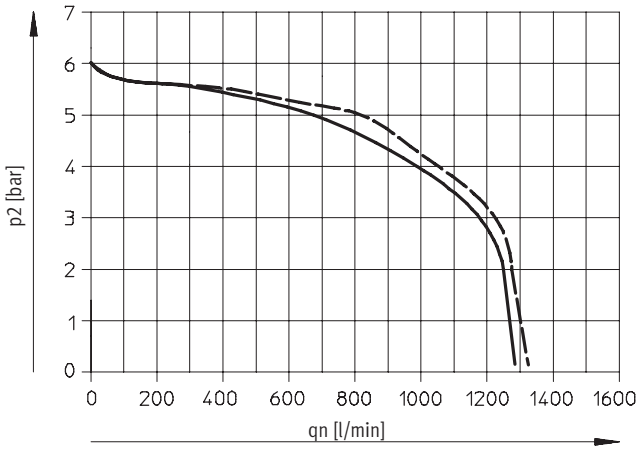

6 bar
10 bar

Flow rate qn as a function of flow control

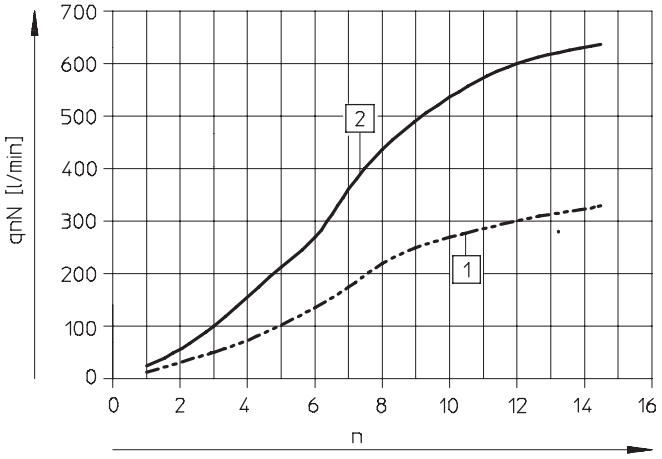

1 Width 18 mm
2 Width 26 mm

n Revolutions of the adjusting screw

Flow rate qn as a function of output pressure p2 with pressure regulator plates (P regulator plate) for port 1

Width 42 mm

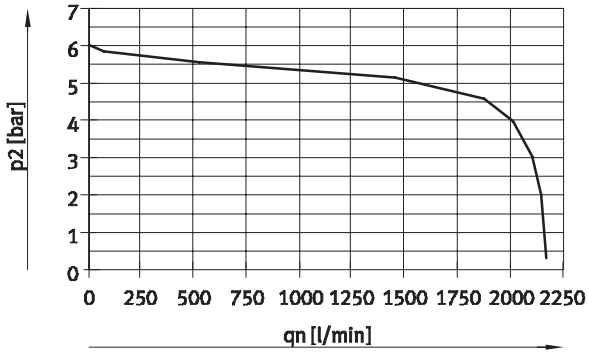

Supply pressure 10 bar,
set regulator pressure 6 bar

Flow rate qn as a function of output pressure p2 with pressure regulator plates (AB regulator plates) for port 2, 4 or ports 4/2

Width 42 mm

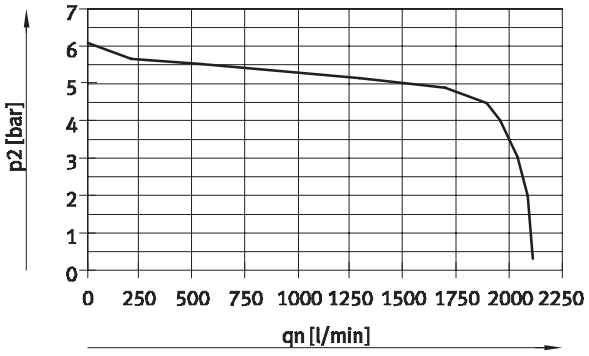

Supply pressure 10 bar,
set regulator pressure 6 bar

Flow rate qn as a function of output pressure p2 with pressure regulator plates (AB regulator plates, rev.) for ports 4/2, reversible

Width 42 mm

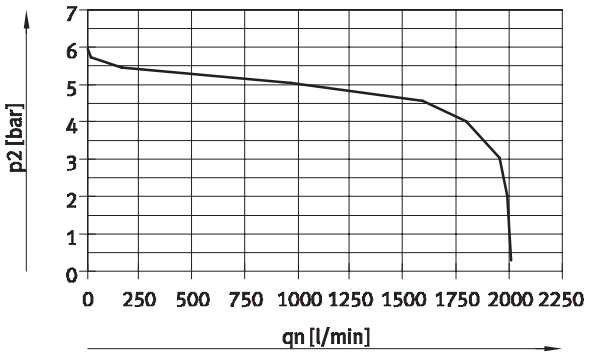

Supply pressure 10 bar,
set regulator pressure 6 bar

Flow rate qn as a function of flow control

Width 42 mm

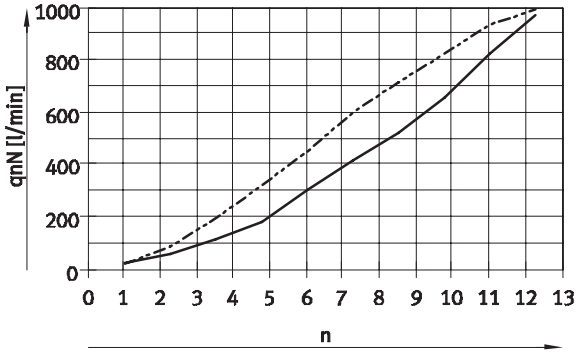

Flow control screw from 2 → 3

Flow control screw from 4 → 5

n Revolutions of the adjusting screw

Electrical data				
VTSA with CPX terminal		18 mm	26 mm	42 mm
Voltage supply for electronics ($V_{EL/SEN}$)				
Operating voltage	[V DC]	24 ±10%		
Max. intrinsic current consumption at 24 V DC	[mA]	20		
Duty cycle		100%		
Load voltage supply for valves (V_{val})				
Operating voltage	[V DC]	24 ±10%		
Diagnostic message undervoltage V_{OFF}, load voltage outside function range	[V]	21.6 … 21.5		
Protection class to EN 60529		IP65 (for all types of signal transmission in assembled state)		
Power consumption at 24 V DC				
2x 3/2-way valve	[W]	1.3		
5/2-way valve, 5/3-way valve	[W]	1.6		

Valve manifolds type 44 VTSA, ISO 15407-2/ISO 5599-2

Technical data

Electrical data				
VTSA with multi-pin plug connection		18 mm	26 mm	42 mm
Load voltage supply for valves (V_{val})				
Operating voltage	[V DC]	24 ±10%		
	[V AC]	110 ±10% (50 … 60 Hz)		
Maximum residual current	[A]	6		
Acceptable current load at 40 °C	[A]	1		
Surge capacity	[kV]	1.5		
Degree of contamination		3		
Duty cycle		100%		
Protection class to EN 60529		IP65 (for all types of signal transmission in assembled state)		
Power consumption at 24 V DC				
2x 3/2-way valve	[W]	1.3		
5/2-way valve, 5/3-way valve	[W]	1.6		
Power consumption at 110 V AC				
2x 3/2-way valve	[VA]	1		
5/2-way valve, 5/3-way valve	[VA]	1.6		

Electrical data				
VTSA with individual connection		18 mm	26 mm	42 mm
Load voltage supply for valves (V_{val})				
Operating voltage	[V DC]	24 ±10%		
Maximum residual current	[A]	10		
Duty cycle		100%		
Protection class to EN 60529		IP65 (for all types of signal transmission in assembled state)		
Power consumption at 24 V DC				
2x 3/2-way valve	[W]	1.3		
5/2-way valve, 5/3-way valve	[W]	1.6		

Electrical data				
Valve on individual sub-base		18 mm	26 mm	42 mm
Acceptable current load at 40 °C	[A]	2 (1 A per coil)		
Variants with round plug M12				
Operating voltage range	[V DC]	24		
Surge capacity	[kV]	0.8		
Variants with cable conduit fitting				
Operating voltage range	[V DC]	300		
	[V AC]	300		
Surge capacity	[kV]	4		

Materials	
Manifold sub-base	Die-cast aluminum
Valve	Die-cast aluminum, reinforced polyamide
Seals	Nitrile rubber, elastomer (support made of steel)
Supply plate	Die-cast aluminum
Right-hand end plate	Die-cast aluminum
Pneumatic interface for CPX	Die-cast aluminum
Flow control plate	Die-cast aluminum
Pressure regulator plate	Die-cast aluminum, reinforced polyamide
Multi-pin connection block	Die-cast aluminum
Cover for the pneumatic interface and multi-pin plug connection	Wellamid, reinforced polyamide

Valve manifolds type 44 VTSA, ISO 15407-2/ISO 5599-2

Technical data

Product weight	Design		
Approx. weight [g]	18 mm	26 mm	42 mm
Sub-D multi-pin interface module or terminal strip[1]	550		
Interface module CPX[1]	1,470		
Electrical interface for AS-interface	300		
AS-interface module	850		
Supply plate[2]			
• Exhaust plate with 3 and 5 common	617		
• Exhaust port cover with 3 and 5 separated	597		
Right-hand end plate[3]			
• Axial	339		
• Selector	281		
Manifold sub-base[4]	447	634	340
90° connection plate[3]	170	230	176
Pressure regulator plate			
for port 1	350	402	640
for port 4 or 2	367	448	640
for ports 4/2	611	692	920
Flow control plate	228	320	220
Vertical supply plate[3]	140	191	340
Vertical pressure shut-off plate	209	273	600
Valves			
• 5/3-way valve (code: B, G, E)	191	320	456
• 5/2-way valve, single solenoid (code: M, O)	163	293	426
• 5/2-way valve, double solenoid (code: J, D)	172	276	439
• 2x 3/2-way valve (code: N, K, H, P, Q, R)	190	335	442
Blanking plate	34.4	73.3	68

1) With sheet metal seal, printed circuit board
2) With sheet metal seal and electrical manifold module
3) With screws
4) With sheet metal seal, electrical manifold module, inscription label holder, 4 screws

Dimensions Download CAD Data ➔ **www.festo.com/us/cad**

Individual sub-base with M12 plug, width 18 mm

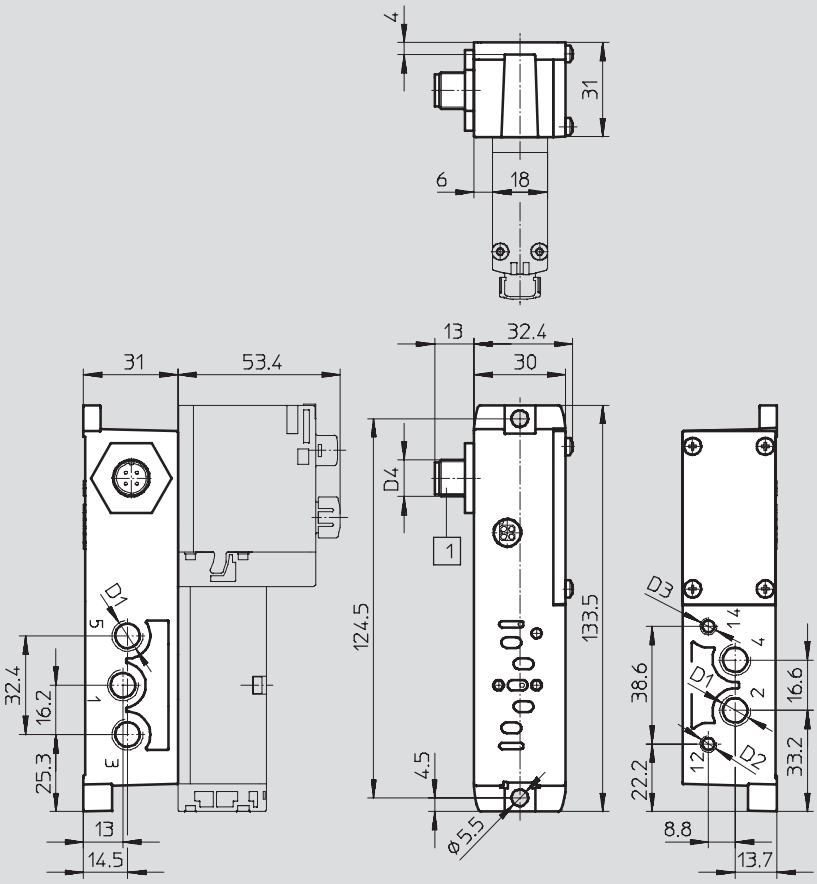

1 Plug to EN 61076-2-101

Type	D1	D2	D3	D4
External pilot air supply, M12 plug				
VABS-S4-2S-G18-R3	G⅛	M5	M5	M12
Internal pilot air supply, M12 plug				
VABS-S4-2S-G18-B-R3	G⅛	M5	–	M12

Note: This product conforms with the ISO 1179-1 standard and the ISO 228-1 standard.

Note: All metric products can be used within inch tubing systems via hybrid fittings (➔ Overview on page 88)

Dimensions Download CAD Data ➔ **www.festo.com/us/cad**

Individual sub-base with cable terminals, width 18 mm

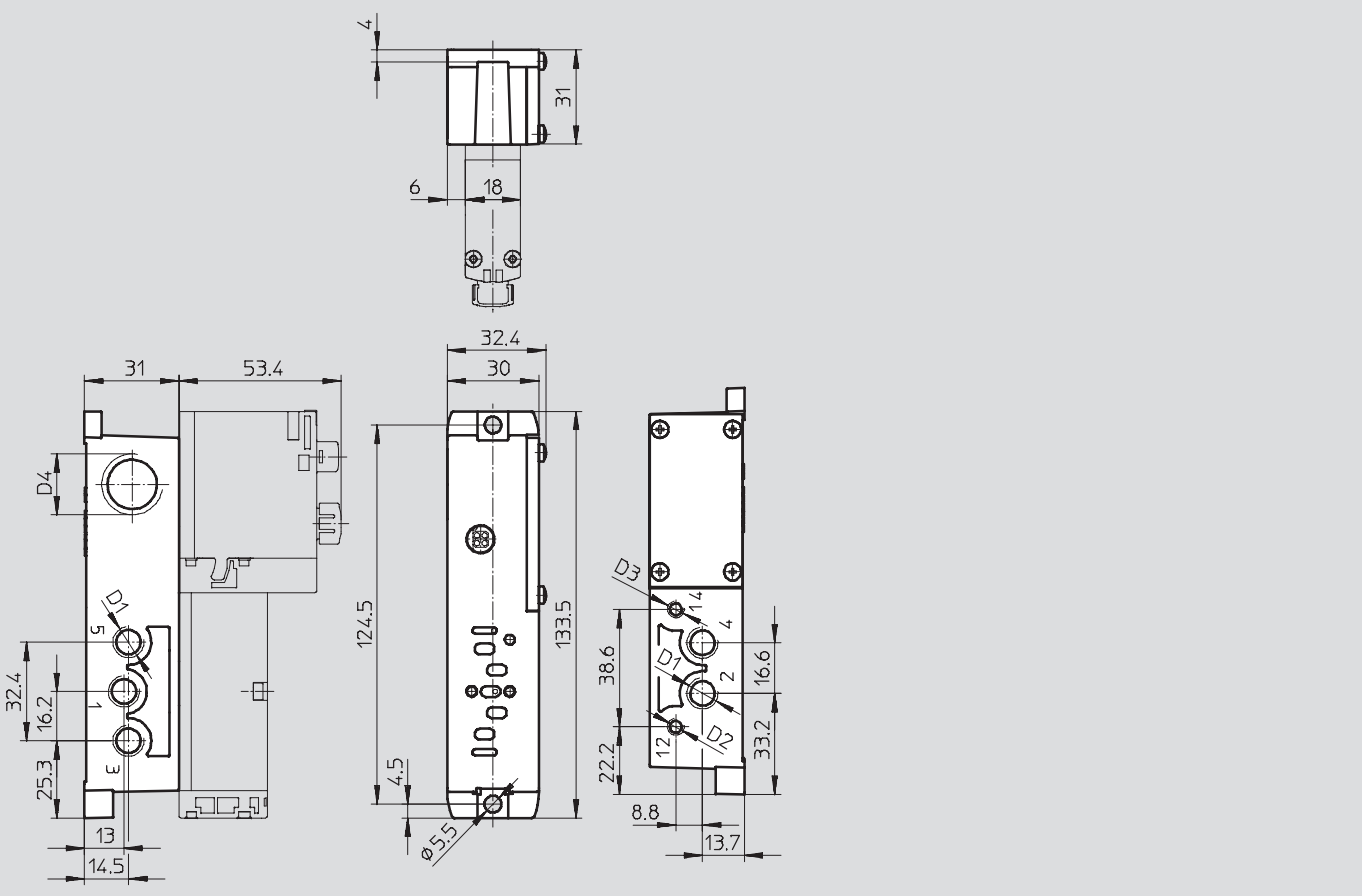

Type	D1	D2	D3	D4
External pilot air supply, cable terminals				
VABS-S4-2S-G18-K2	G⅛	M5	M5	M20x1.5
VABS-S4-2S-N18-K2	⅛NPT	10-32 UNF-2B	10-32 UNF-2B	½NPT
Internal pilot air supply, cable terminals				
VABS-S4-2S-G18-B-K2	G⅛	M5	–	M20x1.5
VABS-S4-2S-N18-B-K2	⅛NPT	10-32 UNF-2B	–	½NPT

Note: This product conforms with the ISO 1179-1 standard and the ISO 228-1 standard.

Note: All metric products can be used within inch tubing systems via hybrid fittings (➔ Overview on page 88)

Dimensions Download CAD Data ➔ **www.festo.com/us/cad**

Individual sub-base with M12 plug, width 26 mm

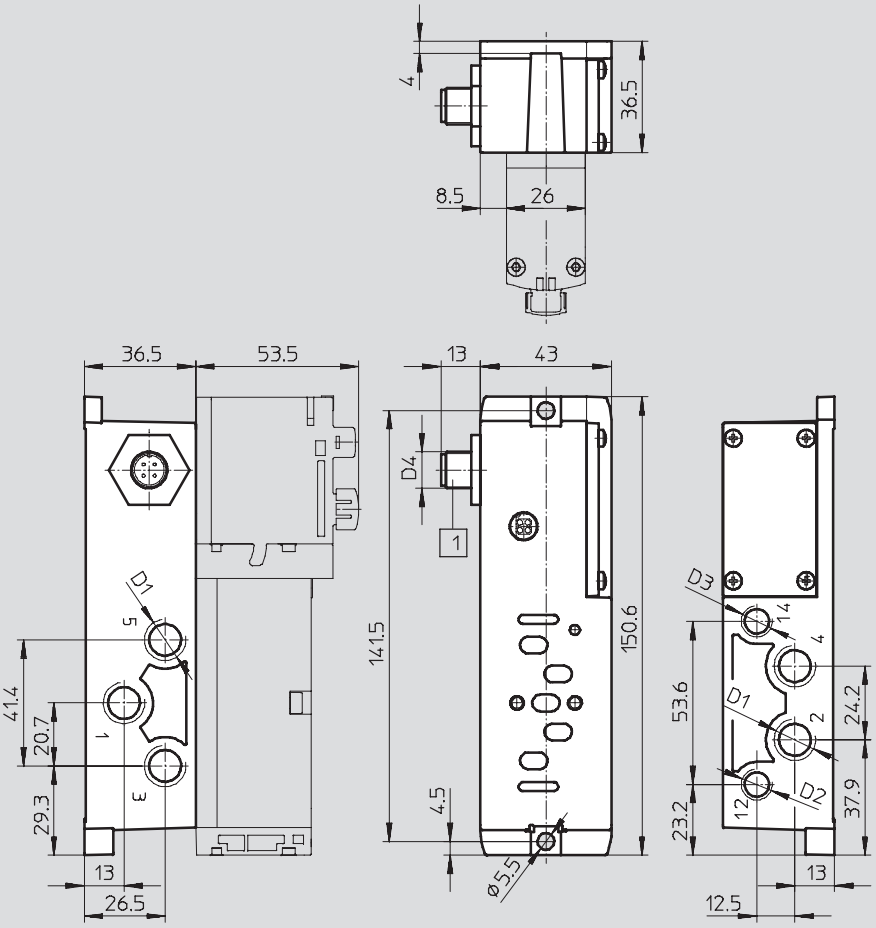

1 Plug to EN 61076-2-101

Type	D1	D2	D3	D4
External pilot air supply, M12 plug				
VABS-S4-1S-G14-R3	G¼	G⅛	G⅛	M12
Internal pilot air supply, M12 plug				
VABS-S4-1S-G14-B-R3	G¼	G⅛	–	M12

Note: This product conforms with the ISO 1179-1 standard and the ISO 228-1 standard.

Note: All metric products can be used within inch tubing systems via hybrid fittings (➔ Overview on page 88)

Dimensions Download CAD Data ➔ **www.festo.com/us/cad**

Individual sub-base with cable terminals, width 26 mm

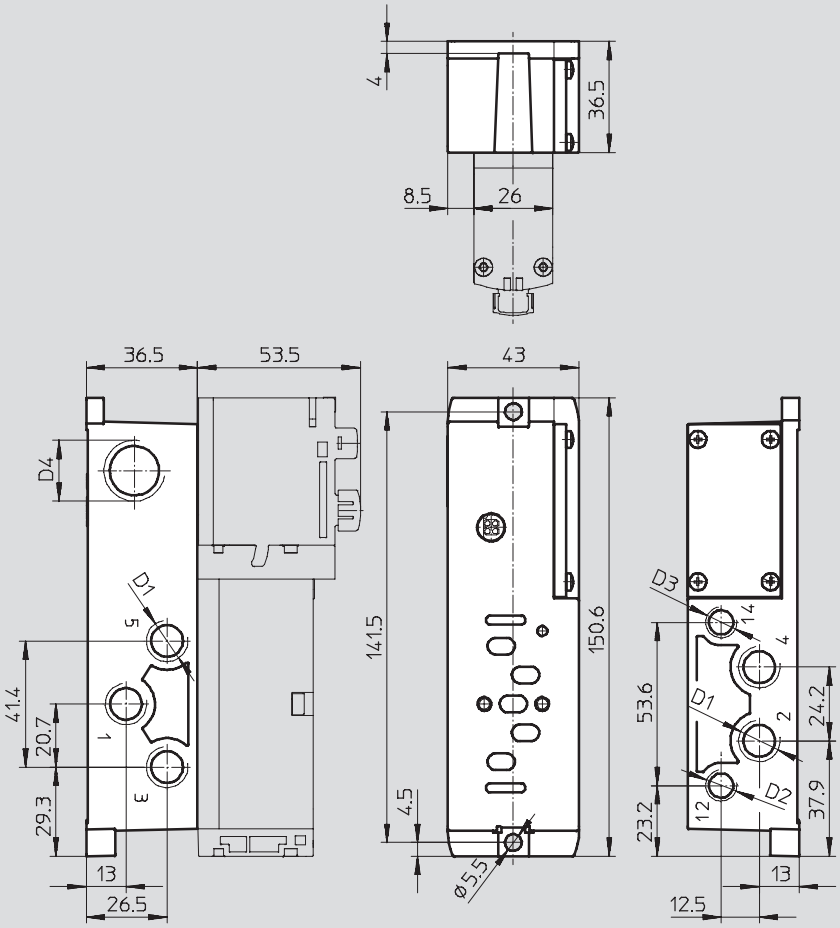

Type	D1	D2	D3	D4
External pilot air supply, cable terminals				
VABS-S4-1S-G14-K2	G¼	G⅛	G⅛	M20x1.5
VABS-S4-1S-N14-K2	¼NPT	⅛NPT	⅛NPT	½NPT
Internal pilot air supply, cable terminals				
VABS-S4-1S-G14-B-K2	G¼	G⅛	–	M20x1.5
VABS-S4-1S-N14-B-K2	¼NPT	⅛NPT	–	½NPT

Note: This product conforms with the ISO 1179-1 standard and the ISO 228-1 standard.

Note: All metric products can be used within inch tubing systems via hybrid fittings (➔ Overview on page 88)

Dimensions Download CAD Data ➔ **www.festo.com/us/cad**

Individual sub-base with spring-loaded terminal (C1) or for self-assembly (K1), width 42 mm

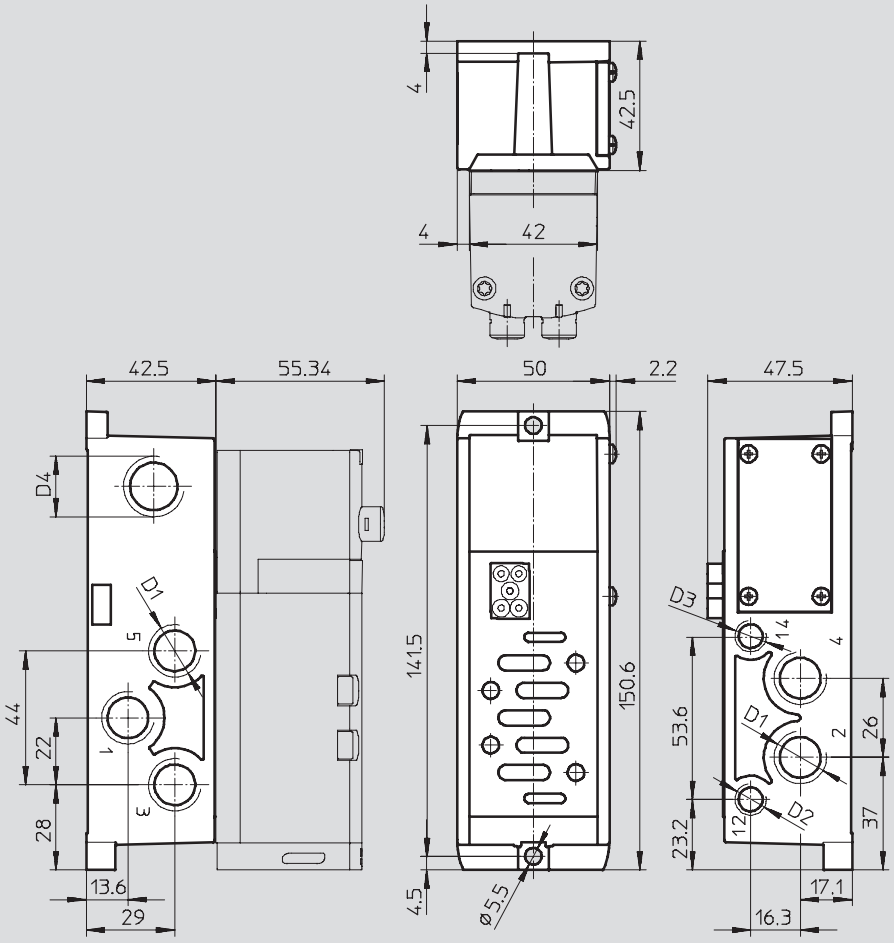

Type	D1	D2	D3	D4
External pilot air supply				
VABS-S2-1S-G38-K1(C1)	G3/8	G1/8	G1/8	M20x1.5
VABS-S2-1S-N38-K1(C1)	3/8NPT	1/8NPT	1/8NPT	1/2NPT
Internal pilot air supply				
VABS-S2-1S-G14-B-K1(C1)	G3/8	G1/8	–	M20x1.5
VABS-S2-1S-N14-B-K1(C1)	3/8NPT	1/8NPT	–	1/2NPT

Note: This product conforms with the ISO 1179-1 standard and the ISO 228-1 standard.

Note: All metric products can be used within inch tubing systems via hybrid fittings (➔ Overview on page 88)

Dimensions Download CAD Data ➔ **www.festo.com/us/cad**

Individual sub-base with M12 plug, width 42 mm

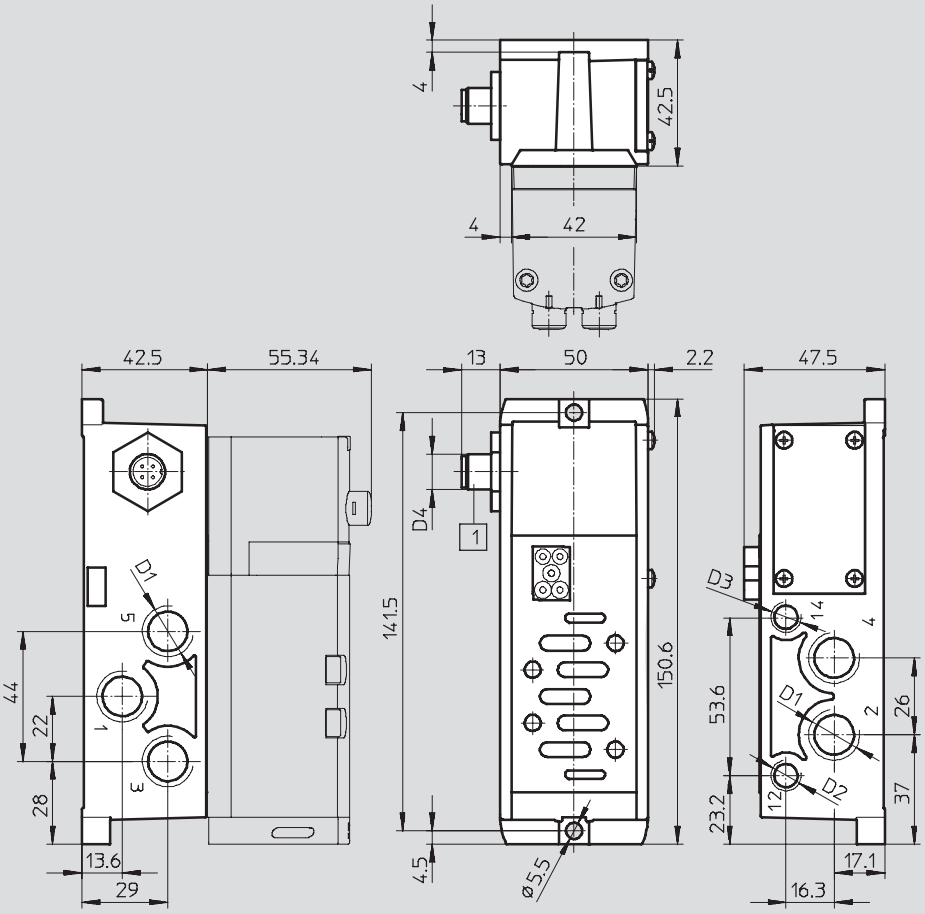

1 Plug to EN 61076-2-101

Type	D1	D2	D3	D4
External pilot air supply				
VABS-S2-1S-G38-R3	G3/8	G1/8	G1/8	M12
Internal pilot air supply				
VABS-S2-1S-G14-B-R3	G3/8	G1/8	–	M12

Note: This product conforms with the ISO 1179-1 standard and the ISO 228-1 standard.

Note: All metric products can be used within inch tubing systems via hybrid fittings (➔ Overview on page 88)

Dimensions Download CAD Data ➔ **www.festo.com/us/cad**

Valve manifold with individual electrical connection

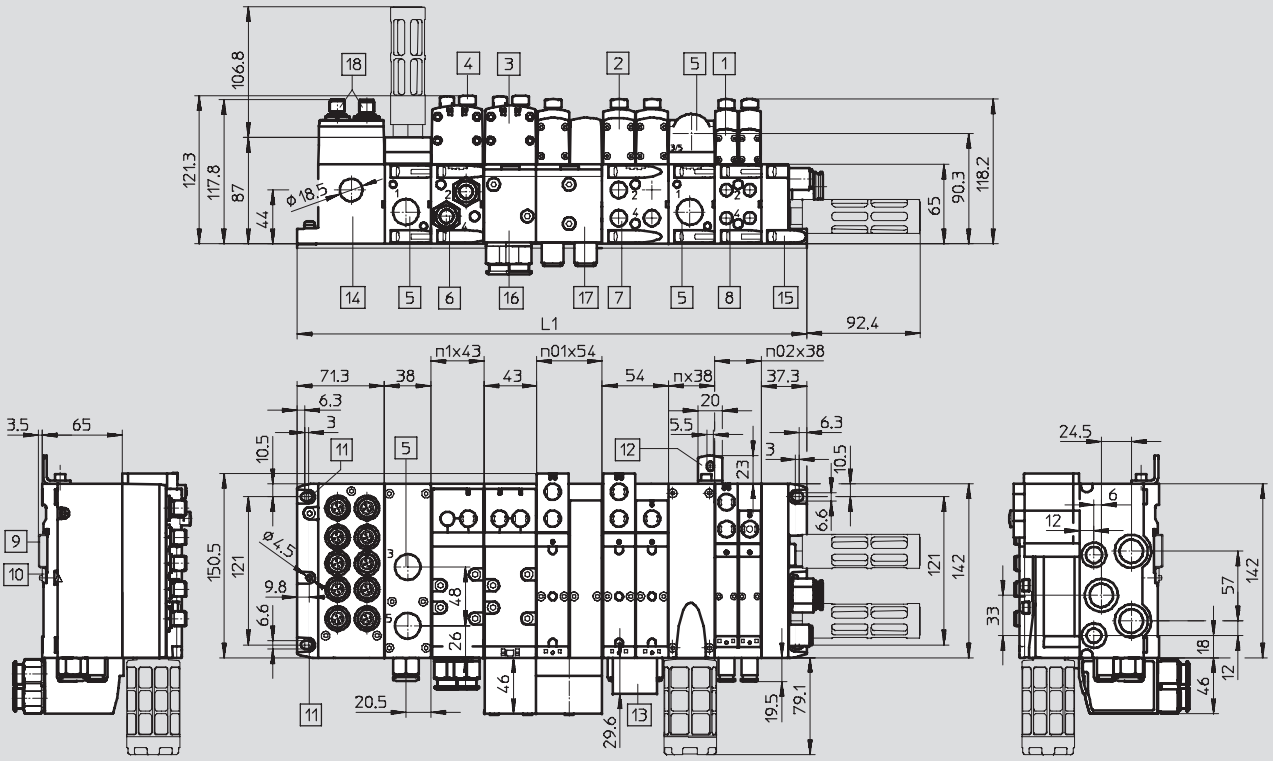

1 Solenoid valve 18 mm
2 Solenoid valve 26 mm
3 Solenoid valve 42 mm
4 Cover cap/manual override
5 Metric thread G½ or ½NPT
6 Metric thread G⅜ or ⅜NPT
7 Metric thread G¼ or ¼NPT
8 Metric thread G⅛ or ⅛NPT
9 H-rail
10 H-rail mounting
11 Mounting hole
12 Additional mounting bracket
13 Inscription label holder
14 Individual connection
15 End plate
16 90° connection plate width 42 mm, G⅜
17 90° connection plate width 18 mm, G⅛ width 26 mm, G¼
18 M12 plug, 5-pin (6-way or 10-way)

n02 Number of manifold sub-bases 18 mm
n01 Number of manifold sub-bases 26 mm
n1 Number of manifold sub-bases 42 mm
n Number of supply plates (only with end plate with pilot air selector)

Width	L1
18 mm	71.3 + n02 x 38 + n x 38 + 37.3
26 mm	71.3 + n01 x 54 + n x 38 + 37.3
42 mm	71.3 + n1 x 43 + n x 38 + 37.3
Mixture of 18 mm, 26 mm and 42 mm	71.3 + n02 x 38 + n01 x 54 + n1 x 43 + n x 38 + 37.3

Note: This product conforms with the ISO 1179-1 standard and the ISO 228-1 standard.

Note: All metric products can be used within inch tubing systems via hybrid fittings (➔ Overview on page 88)

Dimensions Download CAD Data ➔ **www.festo.com/us/cad**

Valve manifold with multi-pin plug connection

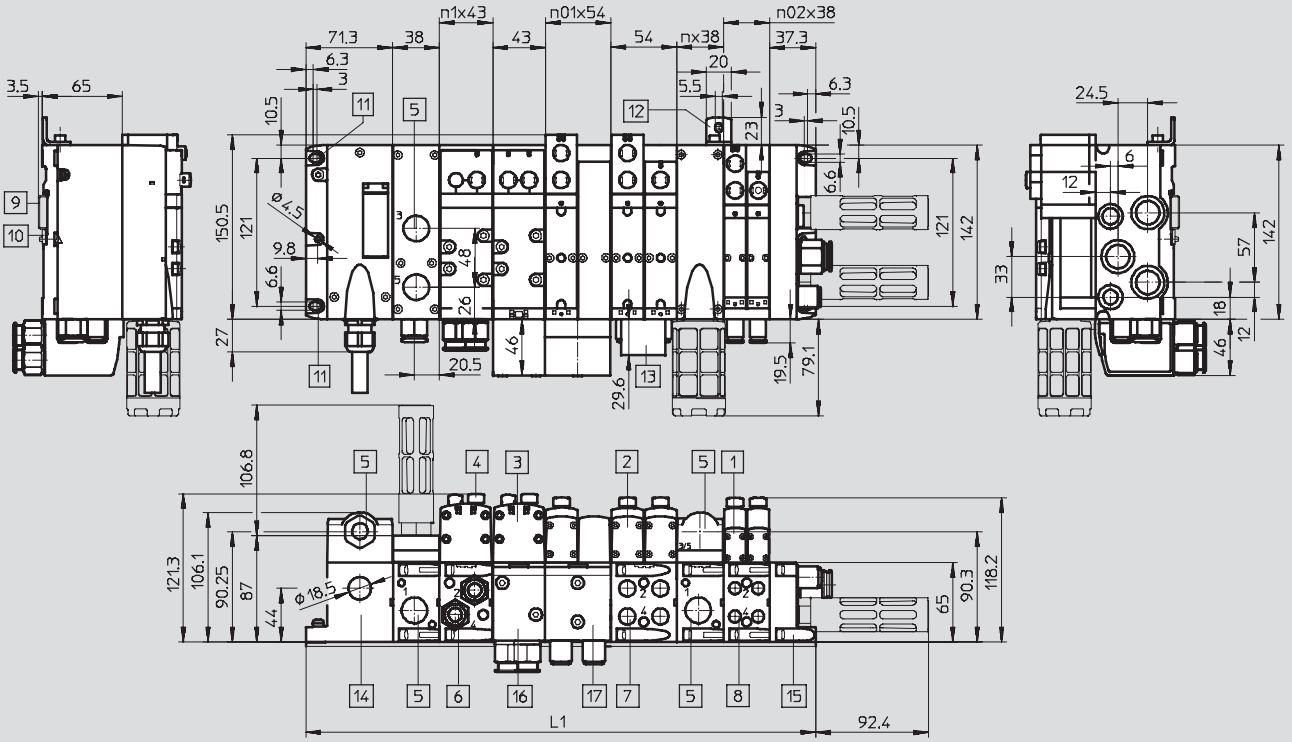

1	Solenoid valve 18 mm	7	Metric thread G¼ or ¼NPT	12	Additional mounting bracket	n02	Number of manifold sub-bases 18 mm
2	Solenoid valve 26 mm	8	Metric thread G⅛ or ⅛NPT	13	Inscription label holder	n01	Number of manifold sub-bases 26 mm
3	Solenoid valve 42 mm	9	H-rail	14	Multi-pin plug connection	n1	Number of manifold sub-bases 42 mm
4	Cover cap/manual override	10	H-rail mounting	15	End plate	n	Number of supply plates
5	Metric thread G½ or ½NPT	11	Mounting hole	16	90° connection plate width 42 mm, G⅜		
6	Metric thread G⅜ or ⅜NPT			17	90° connection plate width 18 mm, G⅛; width 26 mm, G¼		

Width	L1
18 mm	71.3 + n02 x 38 + n x 38 + 37.3
26 mm	71.3 + n01 x 54 + n x 38 + 37.3
42 mm	71.3 + n1 x 43 + n x 38 + 37.3
Mixture of 18 mm, 26 mm and 42 mm	71.3 + n02 x 38 + n01 x 54 + n1 x 43 + n x 38 + 37.3

Note: This product conforms with the ISO 1179-1 standard and the ISO 228-1 standard.

Supply plate with silencer

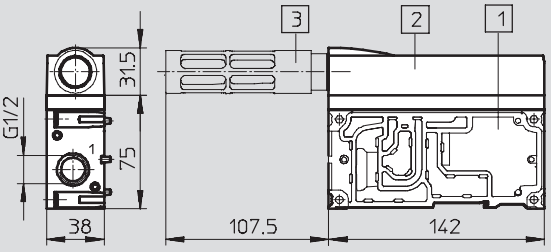

1 Supply plate
2 Exhaust port cover
3 Silencer U-½-B or U-½-B-NPT

Note: All metric products can be used within inch tubing systems via hybrid fittings (➔ Overview on page 88)

Dimensions Download CAD Data ➔ **www.festo.com/us/cad**

Multi-pin, terminal strip (Cage Clamp®)

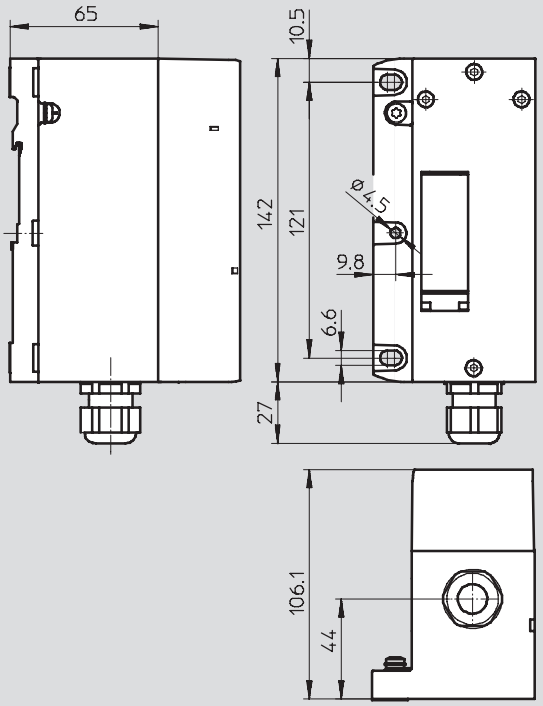

Multi-pin, round plug connector

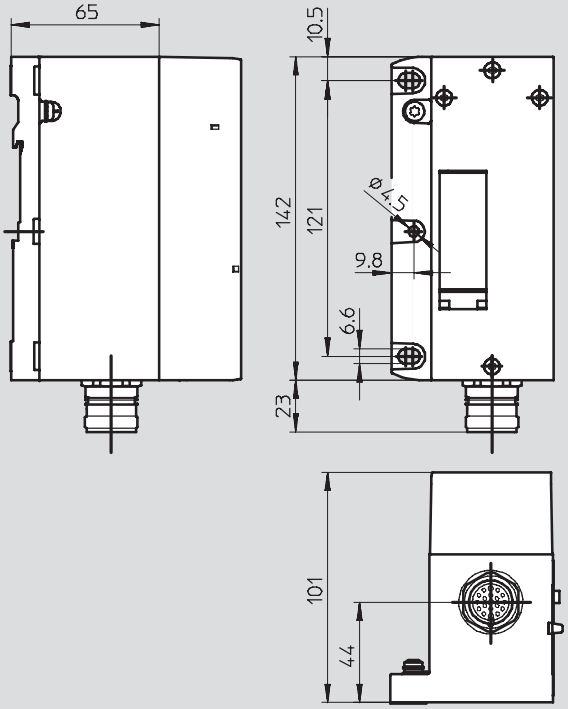

Dimensions Download CAD Data ➔ **www.festo.com/us/cad**

Valve manifold with AS-interface connection

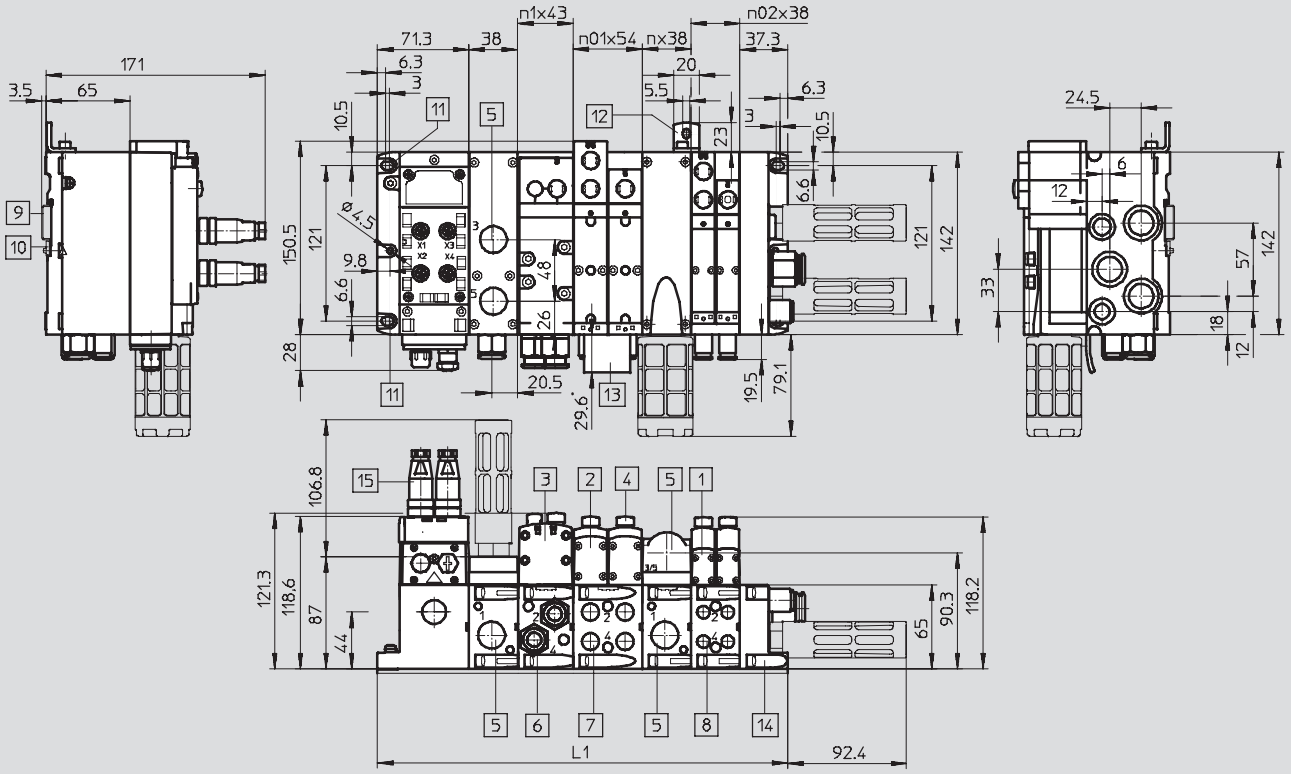

1 Solenoid valve 18 mm
2 Solenoid valve 26 mm
3 Solenoid valve 43 mm
4 Cover cap/manual override
5 Metric thread G½ or ½NPT
6 Metric thread G⅜ or ⅜NPT
7 Metric thread G¼ or ¼NPT
8 Metric thread G⅛ or ⅛NPT
9 H-rail
10 H-rail mounting
11 Mounting hole
12 Additional mounting bracket
13 Inscription label holder
14 End plate
15 Plug M12

n02 Number of manifold sub-bases 18 mm
n01 Number of manifold sub-bases 26 mm
n1 Number of manifold sub-bases 42 mm
n Number of supply plates

Width	L1
18 mm	71.3 + n02 x 38 + n x 38 + 37.3
26 mm	71.3 + n01 x 54 + n x 38 + 37.3
42 mm	71.3 + n1 x 43 + n x 38 + 37.3
Mixture of 18 mm, 26 mm and 42 mm	71.3 + n02 x 38 + n01 x 54 + n1 x 43 + n x 38 + 37.3

Note: All metric products can be used within inch tubing systems via hybrid fittings (➔ Overview on page 88)

Dimensions Download CAD Data ➔ **www.festo.com/us/cad**

Valve manifold with fieldbus connection

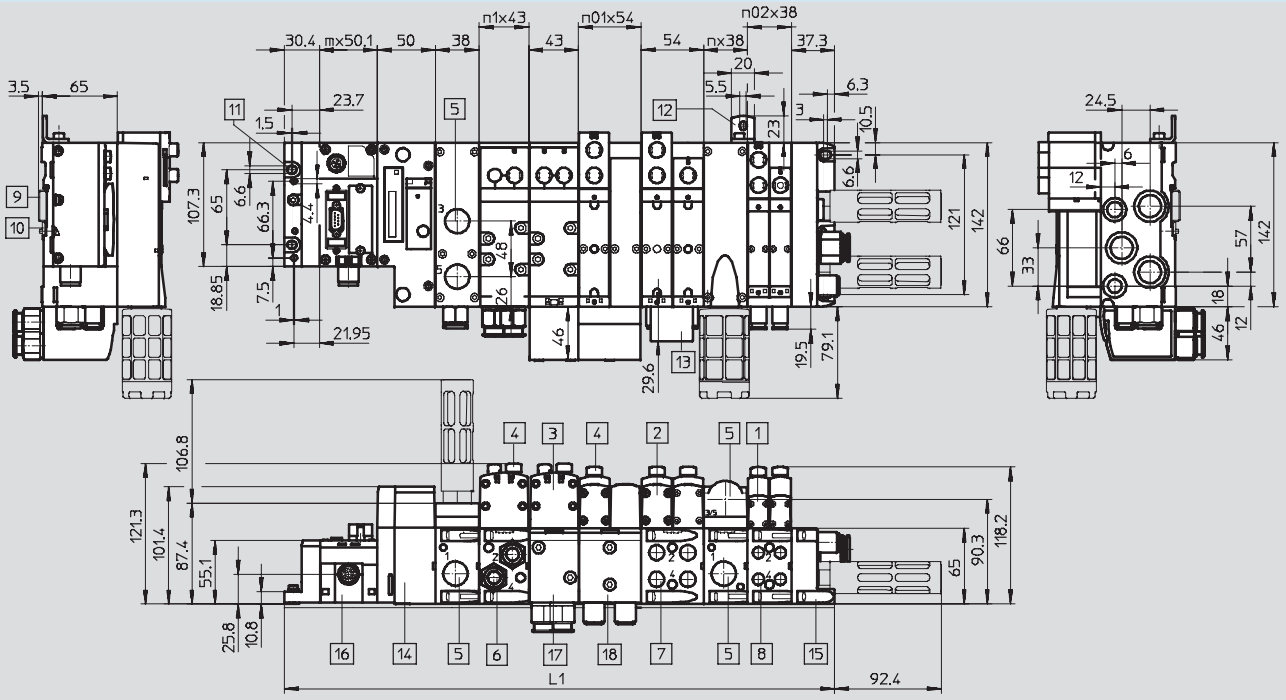

1 Solenoid valve 18 mm
2 Solenoid valve 26 mm
3 Solenoid valve 42 mm
4 Cover cap/manual override
5 Metric thread G½ or ½NPT
6 Metric thread G⅜ or ⅜NPT
7 Metric thread G¼ or ¼NPT
8 Metric thread G⅛ or ⅛NPT
9 H-rail
10 H-rail mounting
11 Mounting hole
12 Additional mounting bracket
13 Inscription label holder
14 Pneumatic interface CPX
15 End plate
16 CPX module/fieldbus node
17 90° connection plate width 42 mm, G⅜
18 90° connection plate width 18 mm, G⅛ width 26 mm, G¼

n02 Number of manifold sub-bases 18 mm
n01 Number of manifold sub-bases 26 mm
n1 Number of manifold sub-bases 42 mm
n Number of supply plates (only with end plate with pilot air selector)
m Number of CPX modules

Width	L1
18 mm	30.4 + m x 50.1 + 50 + n02 x 38 + n x 38 + 37.3
26 mm	30.4 + m x 50.1 + 50 + n01 x 54 + n x 38 + 37.3
42 mm	30.4 + m x 50.1 + 50 + n1 x 43 + n x 38 + 37.3
Mixture of 18 mm, 26 mm and 42 mm	30.4 + m x 50.1 + 50 + n02 x 38 + n01 x 54 + n1 x 43 + n x 38 + 37.3

Note: This product conforms with the ISO 1179-1 standard and the ISO 228-1 standard.

Note: All metric products can be used within inch tubing systems via hybrid fittings (➔ Overview on page 88)

Dimensions Download CAD Data ➔ **www.festo.com/us/cad**

Valve manifold with fieldbus connection via the “Electrical peripherals type 03” system – Electrical components

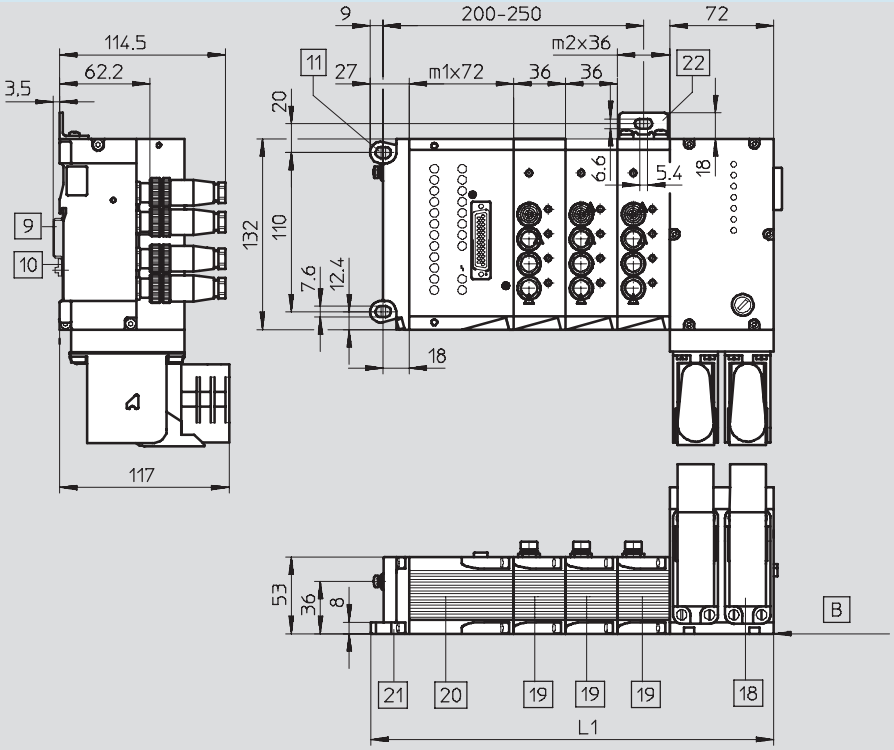

9 H-rail	18 Bus node IFB21-03	21 End plate	m1 Number of I/O modules VIEA-03
10 H-rail mounting	19 I/O module VIGA-03-F, VIGE-03-F	22 Additional mounting bracket	m2 Number of I/O modules VIGE/VIGA
11 Mounting hole	20 I/O module VIEA-03		

L1
27 + m1 x 72 + m2 x 36 + 72

Note

The electrical peripherals type 03 can be extended by up to 12 I/O modules. The following modules from the electrical peripherals type 03 are available:

- Input modules:
  - VIGE-03-FB-8-5POL
  - VIGE-03-FB-8-5POL-S
- Output module:
  - VIGA-03-FB-4-5POL
- Input/output module:
  - VIEA-03-FB-12E-8A-SUBD

Dimensions Download CAD Data ➔ **www.festo.com/us/cad**

Valve manifold with fieldbus connection via the “Electrical peripherals type 03” system – Pneumatic components

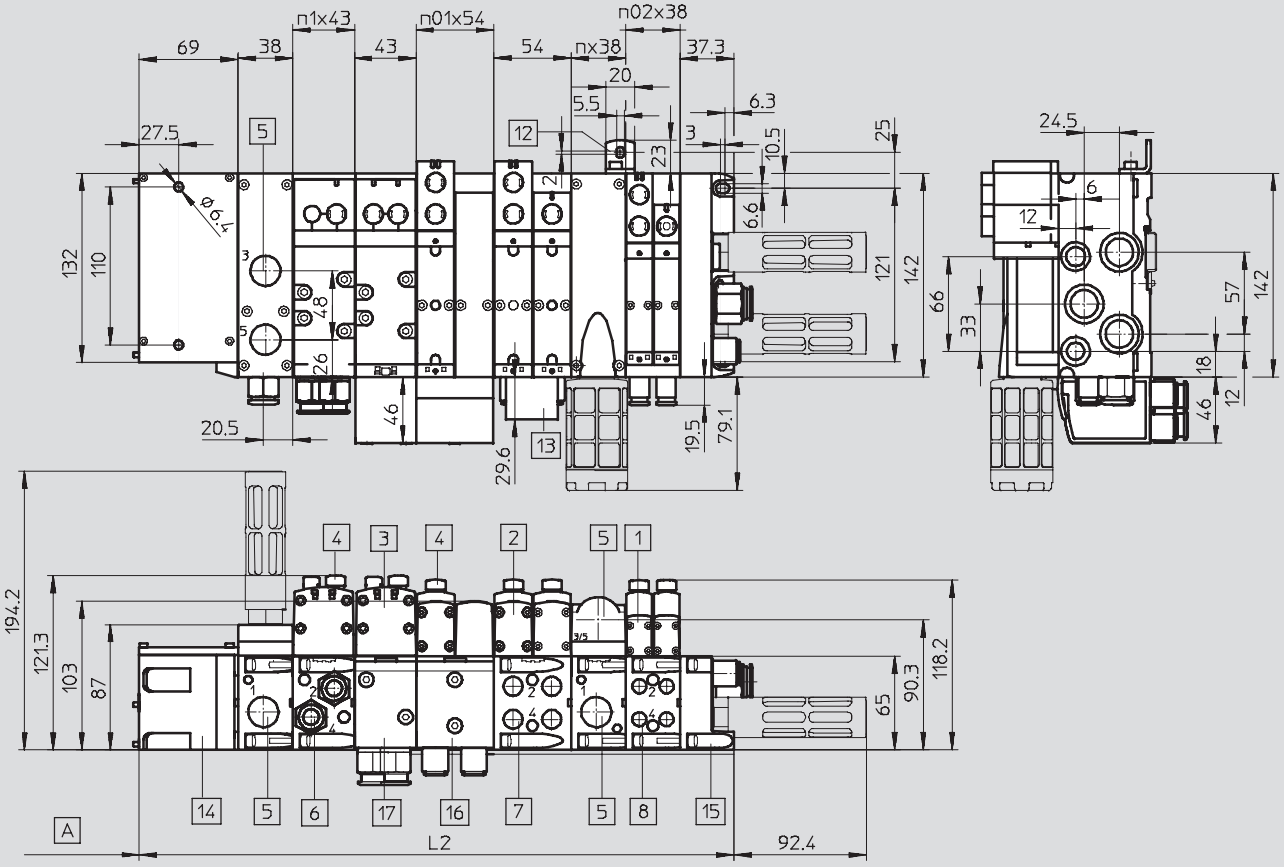

1	Solenoid valve 18 mm	7	Metric thread G¼ or ¼NPT	13	Inscription label holder	n02	Number of manifold sub-bases 18 mm
2	Solenoid valve 26 mm	8	Metric thread G⅛ or ⅛NPT	14	Pneumatic interface	n01	Number of manifold sub-bases 26 mm
3	Solenoid valve 42 mm	9	H-rail	15	End plate	n1	Number of manifold sub-bases 42 mm
4	Cover cap/manual override	10	H-rail mounting	16	CPX module/fieldbus node	n	Number of supply plates (only with end plate with pilot air selector)
5	Metric thread G½ or ½NPT	11	Mounting hole	17	90° connection plate width 42 mm, G⅜	m	Number of CPX modules
6	Metric thread G⅜ or ⅜NPT	12	Additional mounting bracket	18	90° connection plate width 18 mm, G⅛ width 26 mm, G¼		

Width	L1
18 mm	30.4 + m x 50.1 + 50 + n02 x 38 + n x 38 + 37.3
26 mm	30.4 + m x 50.1 + 50 + n01 x 54 + n x 38 + 37.3
42 mm	30.4 + m x 50.1 + 50 + n1 x 43 + n x 38 + 37.3
Mixture of 18 mm, 26 mm and 42 mm	30.4 + m x 50.1 + 50 + n02 x 38 + n01 x 54 + n1 x 43 + n x 38 + 37.3

Note: All metric products can be used within inch tubing systems via hybrid fittings (➔ Overview on page 88)

Valve manifolds type 44 VTSA, ISO 15407-2/ISO 5599-2

Technical data

Dimensions Download CAD Data ➔ **www.festo.com/us/cad**

Supply plate with silencer

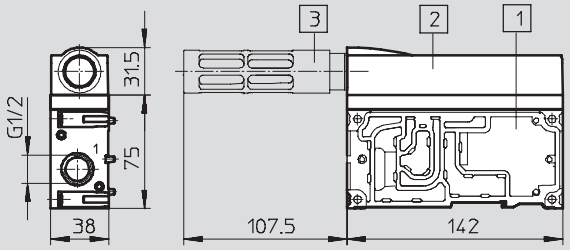

1 Supply plate
2 Exhaust port cover
3 Silencer U-½-B or U-½-B-NPT

Vertical stacking components, width 18 mm

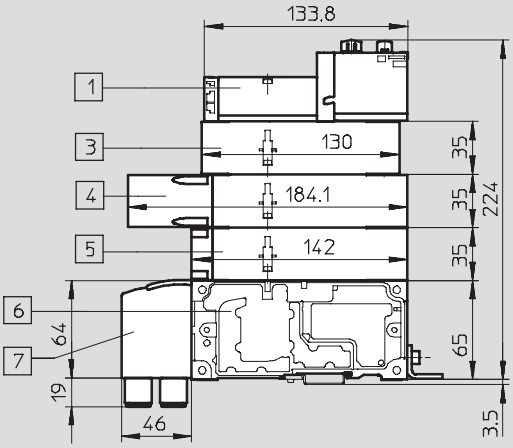

1 Solenoid valve with two solenoid coils, width 18 mm
3 Flow control plate
4 Vertical pressure shut-off plate
5 Vertical supply plate
6 Manifold sub-base
7 90° connection plate

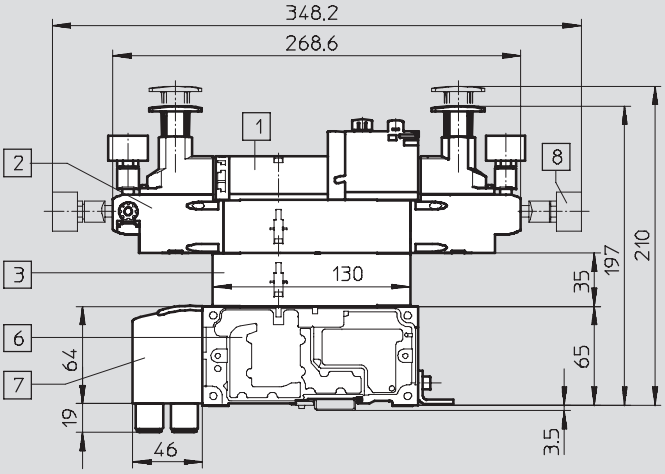

1 Solenoid valve with two solenoid coils, width 18 mm
2 Pressure regulator plate
3 Flow control plate
4 Vertical pressure shut-off plate
6 Manifold sub-base
7 90° connection plate
8 Pressure gauge, freely positionable

Note: All metric products can be used within inch tubing systems via hybrid fittings (➔ Overview on page 88)

Valve manifolds type 44 VTSA, ISO 15407-2/ISO 5599-2

Technical data

Dimensions Download CAD Data ➔ **www.festo.com/us/cad**

Vertical stacking components, width 18 mm, with the pressure regulator plate also suitable for symmetrical valves

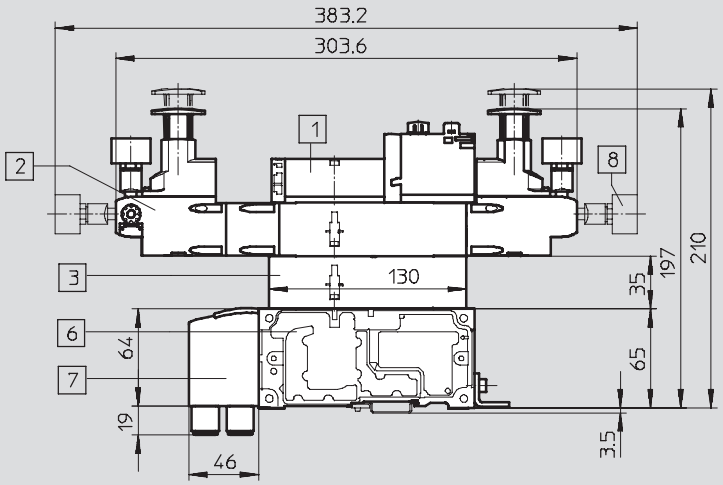

1 Solenoid valve with two solenoid coils, width 18 mm
2 Pressure regulator plate
3 Flow control plate
6 Manifold sub-base
7 90° connection plate
8 Pressure gauge, freely positionable

Vertical stacking components, width 26 mm

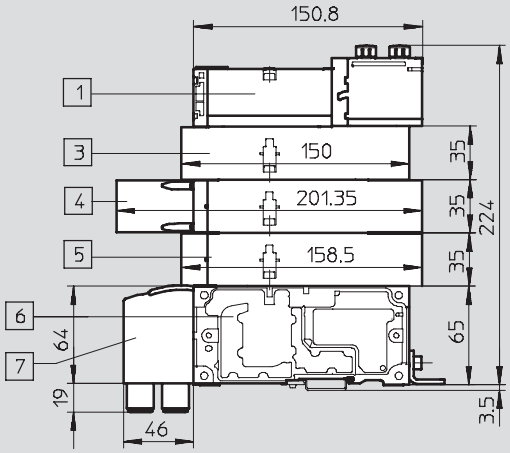

1 Solenoid valve with two solenoid coils, width 26 mm
3 Flow control plate
4 Vertical pressure shut-off plate
5 Vertical supply plate
6 Manifold sub-base
7 90° connection plate

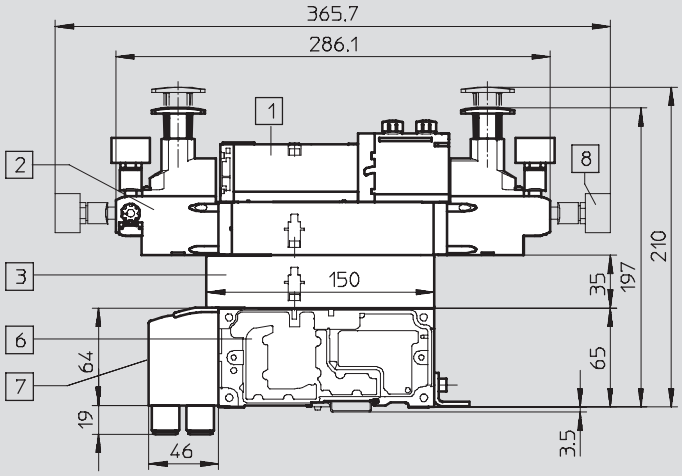

1 Solenoid valve with two solenoid coils, width 26 mm
2 Pressure regulator plate
3 Flow control plate
4 Vertical pressure shut-off plate
6 Manifold sub-base
7 90° connection plate
8 Pressure gauge, freely positionable

Valve manifolds type 44 VTSA, ISO 15407-2/ISO 5599-2

Technical data

Dimensions Download CAD Data ➔ **www.festo.com/us/cad**

Vertical stacking components, width 26 mm, with the pressure regulator plate also suitable for symmetrical valves

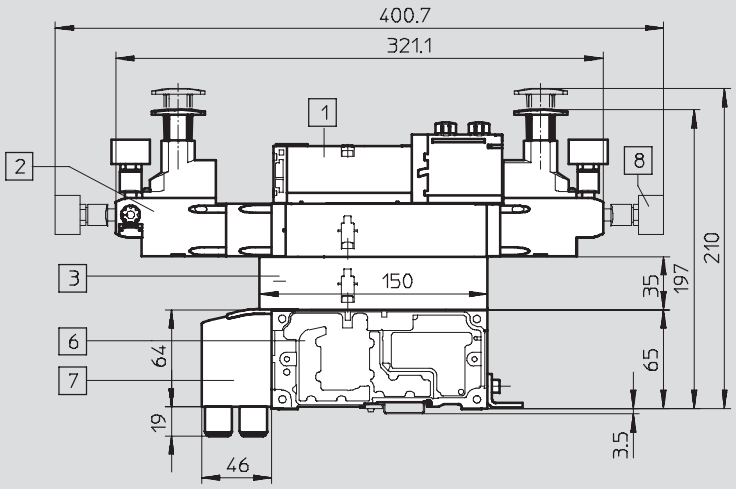

1 Solenoid valve with two solenoid coils, width 26 mm
2 Pressure regulator plate
3 Flow control plate
6 Manifold sub-base
7 90° connection plate
8 Pressure gauge, freely positionable

Vertical stacking components, width 42 mm

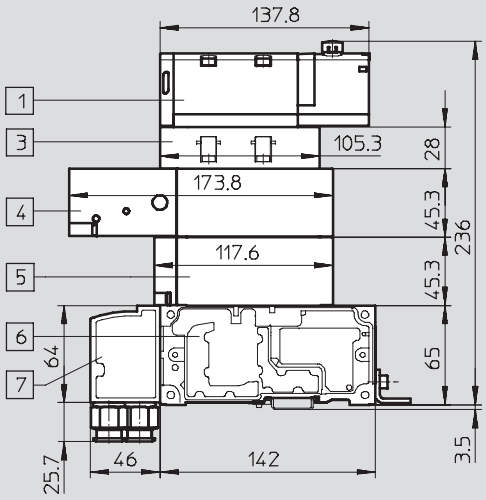

1 Solenoid valve
3 Flow control plate
4 Vertical pressure shut-off plate
5 Vertical supply plate
6 Manifold sub-base
7 90° connection plate

Valve manifolds type 44 VTSA, ISO 15407-2/ISO 5599-2

Technical data

Dimensions Download CAD Data ➔ **www.festo.com/us/cad**

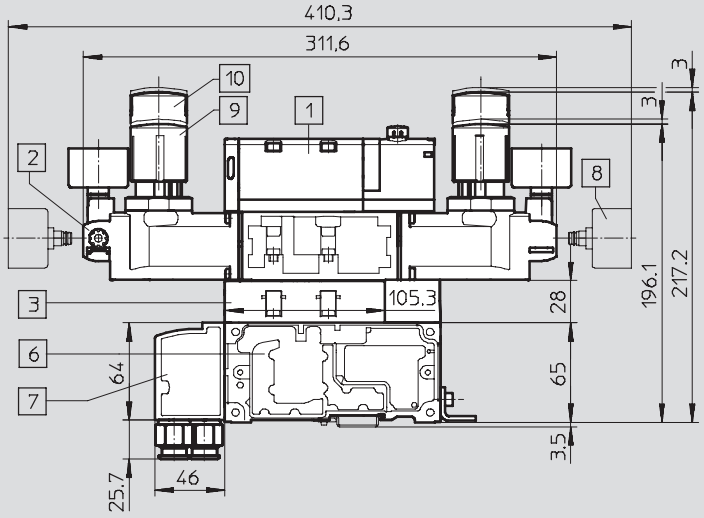

1 Solenoid valve
2 Pressure regulator plate
3 Flow control plate
6 Manifold sub-base
7 90° connection plate
8 Pressure gauge, freely positionable
9 Standard rotary knob
10 Lockable rotary knob

Right-hand end plate

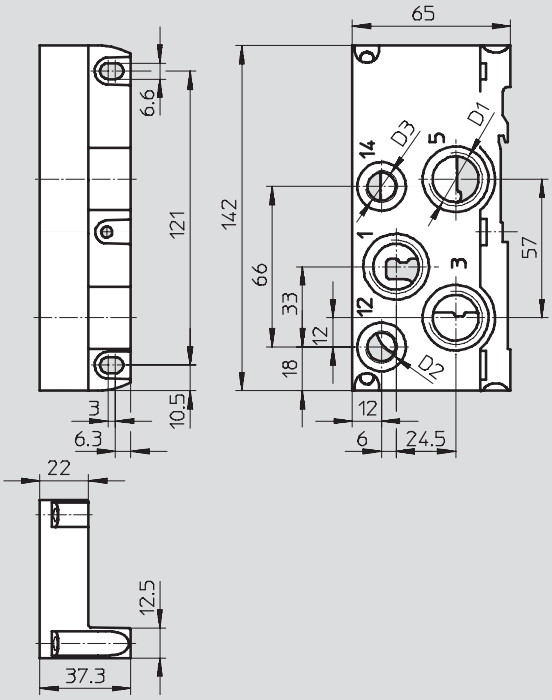

Right-hand end plate with pilot air selector

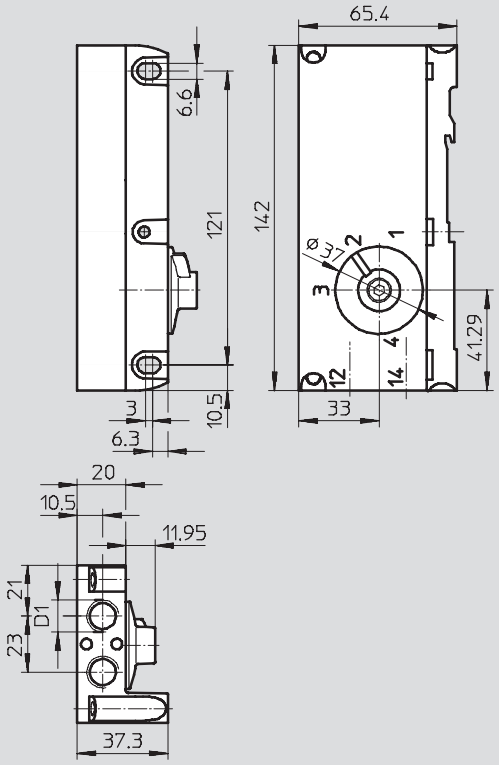

Type	D1	D2	D3
VABE-S6-1R-G12	G½	G¼	G¼
VABE-S6-1RZ-G12			
VABE-S6-1R-N12	½NPT	¼NPT	¼NPT
VABE-S6-1RZ-N12			

Note: This product conforms with the ISO 1179-1 standard and the ISO 228-1 standard.

Type	D1
VABE-S6-1RZ-G-B1	G¼
VABE-S6-1RZ-N-B1	¼NPT

Note: This product conforms with the ISO 1179-1 standard and the ISO 228-1 standard.

Note: All metric products can be used within inch tubing systems via hybrid fittings (➔ Overview on page 88)

Valve manifolds type 44 VTSA, ISO 15407-2/ISO 5599-2

Technical data – Soft-start valve

FESTO

Function

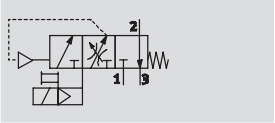

Flow rate

Pressurisation:	3,000 l/min
Exhaust:	3,300 l/min

Temperature range

−5 ... +50 °C

Operating pressure

2 ... 10 bar

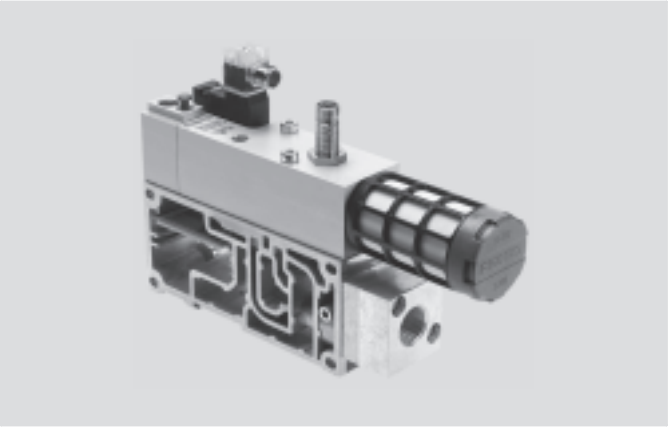

Application

Function

The purpose of the soft-start valve is to slowly and reliably build up the supply pressure in duct 1 of the valve manifold or to quickly exhaust it.
Switch-on takes place in two stages:

- First the working pressure provided for duct 1 gradually increases (the speed can be adjusted using a flow control screw).
- Once the working pressure in duct 1 reaches a previously set value, the soft-start valve switches the full operating pressure at duct 1 of the valve manifold.

The switching point for full operating pressure is set to 4 bar at the factory, but can be changed using an adjusting screw.
The full operating pressure is applied to duct 14 (pilot air) at all times. This pressure causes the valves on the valve manifold to immediately move to the required switching position.

When the valve is not switched, duct 1 of the valve manifold is exhausted via the soft-start valve's exhaust port.
A self-resetting manual override is available for maintenance and service purposes.

Diagnostics

The piston position of the soft-start valve can be monitored using a sensor. This sensor registers whether the valve has switched and thus whether the valve manifold is being supplied with air.
Pressure sensing via a pressure gauge (optional) is also possible.
The soft-start valve can alternatively be ordered with a sensor (retrofitting of a sensor is very complicated due to the necessary sensor calibration).

Connecting cables with integrated LED display are provided for displaying the switching status/signal status.

Pilot air supply

The valve manifold can either be supplied with internal pilot air via the soft-start valve or with internal or external pilot air via the various end plate variants. The type of pilot air supply is determined by the seal of the soft-start valve.
The scope of delivery of the soft-start valve includes both the seal for internal pilot air supply and the seal for external pilot air supply.

Restrictions

Compressed air supply

There must be no other elements supplying compressed air in the pressure zone in which the soft-start valve is being operated.

Exhaust air

Exhaust air cannot be expelled via the soft-start valve. If it is being operated in a pressure zone with duct 3/5 separated, an exhaust plate is required.

Pilot air supply

If internal pilot air supply (duct 14) via the soft-start valve is chosen, there must be no other pilot air supply within the valve manifold.

Reverse operation

The soft-start valve is not approved for reverse operation.

Valve manifolds type 44 VTSA, ISO 15407-2/ISO 5599-2

Technical data – Soft-start valve

General technical data	
Constructional design	Piston spool valve
Actuation type	Electrical
Sealing principle	Soft
Type of mounting	On sub-base
Mounting position	Any
Valve function	Soft-start function
Manual override	Non-detenting
Reset method	Mechanical spring
Type of control	Pilot-actuated
Pilot air supply	Internal, external
Direction of flow	Non-reversible

Standard nominal flow rate qnN [l/min]	
Pressurisation	3,000
Exhaust	3,300

Electrical data		
Type	VABF-S6-1-P5A4-...-2A	VABF-S6-1-P5A4-...-1
Electrical connection	Plug type C to DIN EN 175301-803, square design	
Nominal operating voltage [V]	110 AC	24 DC
Operating voltage range [V]	110 AC ±10%	24 DC ±10%
Coil characteristics	110 V AC: 50/60 Hz, 3VA pull 110 V AC: 50/60 Hz, 2.4VA hold	24 V DC: 2.5 W
Protection class to EN 60529	IP65	

Operating and environmental conditions		
Type	VABF-S6-1-P5A4-...-2A	VABF-S6-1-P5A4-...-1
Operating pressure [bar]	2 ... 10	
Switchover pressure preset-ting [bar]	4	
Operating medium	Filtered compressed air, lubricated or unlubricated, grade of filtration 40 µm	
Ambient temperature [°C]	–5 ... +50	
CE mark (see declaration of conformity)	To EU EMC Directive	–

Weight [g]	
Manifold sub-base	570
Soft-start valves without proximity sensor	590
Soft-start valves with proximity sensor	605

Materials	
Housing	Wrought aluminum alloy
Seals	Nitrile rubber
Screws	Galvanised steel

Valve manifolds type 44 VTSA, ISO 15407-2/ISO 5599-2

Technical data – Soft-start valve

FESTO

Dimensions Download CAD Data ➔ **www.festo.com/us/cad**

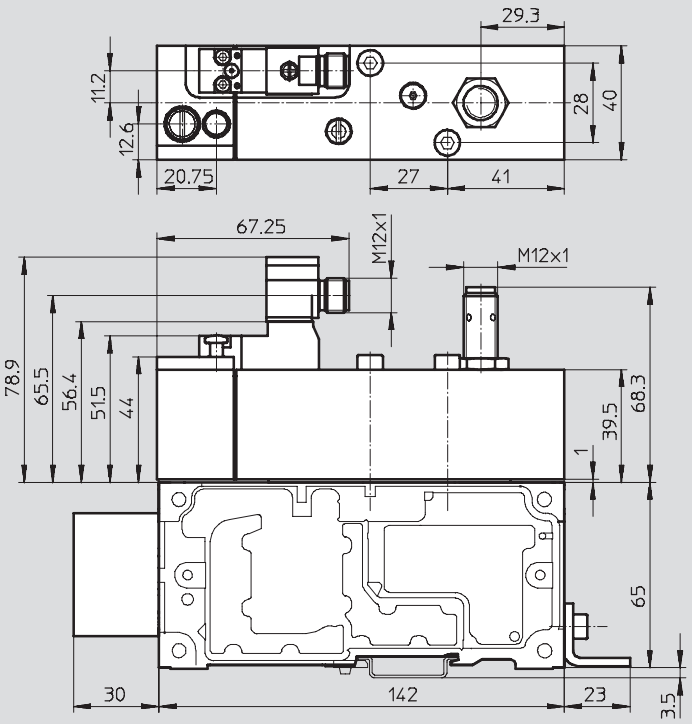

1 Socket head screw M5x48 DIN 912, captive

Ordering data – Valves

	Nominal operating voltage		Sensor output	Pneumatic connection	Type	Part No.
	24 V DC	110 V AC				
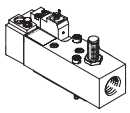	–	■	No	G½	**VABF-S6-1-P5A4-G12-4-2A**	**558 228**
	–	■	No	½ NPT	**VABF-S6-1-P5A4-N12-4-2A**	**558 229**
	■	–	No	G½	**VABF-S6-1-P5A4-G12-4-1**	**558 230**
	■	–	No	½ NPT	**VABF-S6-1-P5A4-N12-4-1**	**558 231**
	■	–	PNP	G½	**VABF-S6-1-P5A4-G12-4-1-P**	**557 377**
	■	–	PNP	½ NPT	**VABF-S6-1-P5A4-N12-4-1-P**	**558 232**
	■	–	NPN	G½	**VABF-S6-1-P5A4-G12-4-1-N**	**558 233**
	■	–	NPN	½ NPT	**VABF-S6-1-P5A4-N12-4-1-N**	**558 234**

Ordering data – Manifold sub-bases

	Pneumatic connection	Type	Part No.
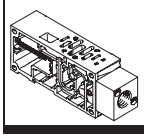	G½	**VABV-S6-1Q-G12**	**556 989**
	½ NPT	**VABV-S6-1Q-N12**	**556 988**

Note: All metric products can be used within inch tubing systems via hybrid fittings (➔ Overview on page 88)

Valve manifolds type 44 VTSA, ISO 15407-2/ISO 5599-2

Technical data – Soft-start valve

Ordering data – Accessories				
			Type	Part No.
	Angled socket, for solenoid coil, 2-pin; straight plug, 2-pin, M12		**MSSD-EB-M12-MONO**	**188 024**
	Protective cap M12 for sealing the sensor opening		**ISK-M12**	**165 592**
	Proximity sensor	PNP	**SIEN-M12B-PS-S-L**	**150 403**
		NPN	**SIEN-M12B-NS-S-L**	**150 401**
	4-wire connecting cable, straight socket, M12x1	5 m cable	**SIM-M12-4GD-5-PU**	**164 259**
	3-wire connecting cable, angled socket, M12x1	5 m cable	**NEBU-M12W5-K-5-LE3**	**541 370**
	3-wire connecting cable, straight socket, M12x1	5 m cable	**NEBU-M12G5-K-5-LE3**	**541 364**
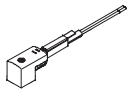	Connecting cable, angled socket, type C, for solenoid coil 24 V DC, with LED for switching status display	2.5 m cable	**KMEB-1-24-2,5-LED**	**151 688**
		5 m cable	**KMEB-1-24-5-LED**	**151 689**
		10 m cable	**KMEB-1-24-10-LED**	**193 457**
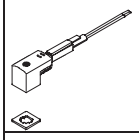	Connecting cable, angled socket, type C, for solenoid coil 230 V AC	2.5 m cable	**KMEB-1-230AC-2,5**	**151 690**
		5 m cable	**KMEB-1-230-5**	**151 691**
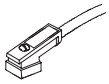	Connecting cable, angled socket, type C, for solenoid coil 24 V DC, with LED for switching status display	2.5 m cable	**KMEB-2-24-2,5-LED**	**174 844**
		5 m cable	**KMEB-2-24-5-LED**	**174 845**
	Connecting cable, angled socket, type C, for solenoid coil 230 V AC	2.5 m cable	**KMEB-2-230AC-2,5**	**174 846**
		5 m cable	**KMEB-2-230-5**	**174 847**
	Blanking plug for thread G½	Scope of delivery 10 pieces	**B-½**	**3 571**
	Pressure gauge 0 ... 10 bar	Pneumatic connection M5	**MA-27-10-M5**	**526 323**

Valve manifolds type 44 VTSA, ISO 15407-2/ISO 5599-2

Individual valve

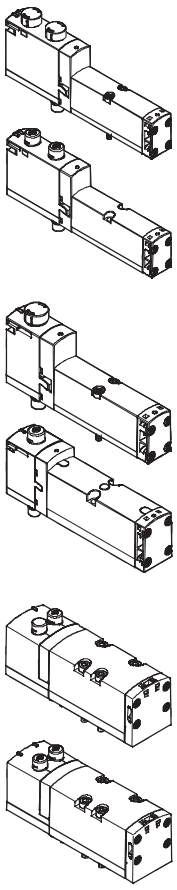

Ordering data					
	Code	Valve function	Width	Type	Part No.
Solenoid valves, 24 V DC					
	M	5/2-way valve, single solenoid, pneumatic spring return	18 mm	**VSVA-B-M52-AZD-A2-1T1L**	**539 184**
			26 mm	**VSVA-B-M52-AZD-A1-1T1L**	**539 158**
			42 mm	**VSVA-B-M52-AZD-D1-1T1L**	**543 698**
	O	5/2-way valve, single solenoid, mechanical spring return	18 mm	**VSVA-B-M52-MZD-A2-1T1L**	**539 185**
			26 mm	**VSVA-B-M52-MZD-A1-1T1L**	**539 159**
			42 mm	**VSVA-B-M52-MZD-D1-1T1L**	**543 699**
	J	5/2-way valve, double solenoid	18 mm	**VSVA-B-B52-ZD-A2-1T1L**	**539 182**
			26 mm	**VSVA-B-B52-ZD-A1-1T1L**	**539 156**
			42 mm	**VSVA-B-B52-ZD-D1-1T1L**	**543 696**
	D	5/2-way valve, double solenoid, with dominant signal	18 mm	**VSVA-B-D52-ZD-A2-1T1L**	**539 183**
			26 mm	**VSVA-B-D52-ZD-A1-1T1L**	**539 157**
			42 mm	**VSVA-B-D52-ZD-D1-1T1L**	**543 697**
	N	2x 3/2-way valve, single solenoid, normally open	18 mm	**VSVA-B-T32U-AZD-A2-1T1L**	**539 178**
			26 mm	**VSVA-B-T32U-AZD-A1-1T1L**	**539 152**
			42 mm	**VSVA-B-T32U-AZD-D1-1T1L**	**543 692**
	K	2x 3/2-way valve, single solenoid, normally closed	18 mm	**VSVA-B-T32C-AZD-A2-1T1L**	**539 176**
			26 mm	**VSVA-B-T32C-AZD-A1-1T1L**	**539 150**
			42 mm	**VSVA-B-T32C-AZD-D1-1T1L**	**543 690**
	H	2x 3/2-way valve, single solenoid, 1x normally open, 1x normally closed	18 mm	**VSVA-B-T32H-AZD-A2-1T1L**	**539 180**
			26 mm	**VSVA-B-T32H-AZD-A1-1T1L**	**539 154**
			42 mm	**VSVA-B-T32H-AZD-D1-1T1L**	**543 694**
	B	5/3-way valve, mid-position pressurised	18 mm	**VSVA-B-P53U-ZD-A2-1T1L**	**539 186**
			26 mm	**VSVA-B-P53U-ZD-A1-1T1L**	**539 160**
			42 mm	**VSVA-B-P53U-ZD-D1-1T1L**	**543 700**
	G	5/3-way valve, mid-position closed	18 mm	**VSVA-B-P53C-ZD-A2-1T1L**	**539 188**
			26 mm	**VSVA-B-P53C-ZD-A1-1T1L**	**539 162**
			42 mm	**VSVA-B-P53C-ZD-D1-1T1L**	**543 702**
	E	5/3-way valve, mid-position exhausted	18 mm	**VSVA-B-P53E-ZD-A2-1T1L**	**539 187**
			26 mm	**VSVA-B-P53E-ZD-A1-1T1L**	**539 161**
			42 mm	**VSVA-B-P53E-ZD-D1-1T1L**	**543 701**
	P	2x 3/2-way valve, single solenoid, reverse operation, normally open	18 mm	**VSVA-B-T32F-AZD-A2-1T1L**	**539 179**
			26 mm	**VSVA-B-T32F-AZD-A1-1T1L**	**539 153**
			42 mm	**VSVA-B-T32F-AZD-D1-1T1L**	**543 693**
	Q	2x 3/2-way valve, single solenoid, reverse operation, normally closed	18 mm	**VSVA-B-T32N-AZD-A2-1T1L**	**539 177**
			26 mm	**VSVA-B-T32N-AZD-A1-1T1L**	**539 151**
			42 mm	**VSVA-B-T32N-AZD-D1-1T1L**	**543 691**
	R	2x 3/2-way valve, single solenoid, reverse operation, 1x normally open, 1x normally closed	18 mm	**VSVA-B-T32W-AZD-A2-1T1L**	**539 181**
			26 mm	**VSVA-B-T32W-AZD-A1-1T1L**	**539 155**
			42 mm	**VSVA-B-T32W-AZD-D1-1T1L**	**543 695**

Valve manifolds type 44 VTSA, ISO 15407-2/ISO 5599-2

Individual valve

FESTO

Ordering data

	Code	Valve function	Width	Type	Part No.
Solenoid valves, 110 V AC					
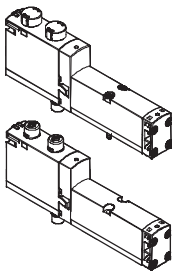	M	5/2-way valve, single solenoid, pneumatic spring return	18 mm	**VSVA-B-M52-AZD-A2-2AT1L**	**539 171**
			26 mm	**VSVA-B-M52-AZD-A1-2AT1L**	**539 145**
			42 mm	**VSVA-B-M52-AZD-D1-2AT1L**	**543 685**
	O	5/2-way valve, single solenoid, mechanical spring return	18 mm	**VSVA-B-M52-MZD-A2-2AT1L**	**539 172**
			26 mm	**VSVA-B-M52-MZD-A1-2AT1L**	**539 146**
			42 mm	**VSVA-B-M52-MZD-D1-2AT1L**	**543 686**
	J	5/2-way valve, double solenoid	18 mm	**VSVA-B-B52-ZD-A2-2AT1L**	**539 169**
			26 mm	**VSVA-B-B52-ZD-A1-2AT1L**	**539 143**
			42 mm	**VSVA-B-B52-ZD-D1-2AT1L**	**543 683**
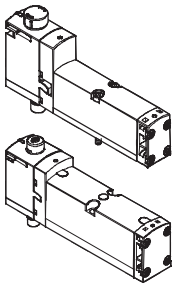	D	5/2-way valve, double solenoid, with dominant signal	18 mm	**VSVA-B-D52-ZD-A2-2AT1L**	**539 170**
			26 mm	**VSVA-B-D52-ZD-A1-2AT1L**	**539 144**
			42 mm	**VSVA-B-D52-ZD-D1-2AT1L**	**543 684**
	N	2x 3/2-way valve, single solenoid, normally open	18 mm	**VSVA-B-T32U-AZD-A2-2AT1L**	**539 165**
			26 mm	**VSVA-B-T32U-AZD-A1-2AT1L**	**539 139**
			42 mm	**VSVA-B-T32U-AZD-D1-2AT1L**	**543 679**
	K	2x 3/2-way valve, single solenoid, normally closed	18 mm	**VSVA-B-T32C-AZD-A2-2AT1L**	**539 163**
			26 mm	**VSVA-B-T32C-AZD-A1-2AT1L**	**539 137**
			42 mm	**VSVA-B-T32C-AZD-D1-2AT1L**	**543 677**
	H	2x 3/2-way valve, single solenoid, 1x normally open, 1x normally closed	18 mm	**VSVA-B-T32H-AZD-A2-2AT1L**	**539 167**
			26 mm	**VSVA-B-T32H-AZD-A1-2AT1L**	**539 141**
			42 mm	**VSVA-B-T32H-AZD-D1-2AT1L**	**543 681**
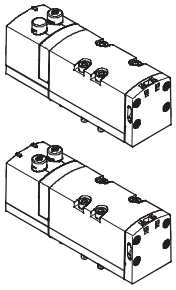	B	5/3-way valve, mid-position pressurised	18 mm	**VSVA-B-P53U-ZD-A2-2AT1L**	**539 173**
			26 mm	**VSVA-B-P53U-ZD-A1-2AT1L**	**539 147**
			42 mm	**VSVA-B-P53U-ZD-D1-2AT1L**	**543 687**
	G	5/3-way valve, mid-position closed	18 mm	**VSVA-B-P53C-ZD-A2-2AT1L**	**539 175**
			26 mm	**VSVA-B-P53C-ZD-A1-2AT1L**	**539 149**
			42 mm	**VSVA-B-P53C-ZD-D1-2AT1L**	**543 689**
	E	5/3-way valve, mid-position exhausted	18 mm	**VSVA-B-P53E-ZD-A2-2AT1L**	**539 174**
			26 mm	**VSVA-B-P53E-ZD-A1-2AT1L**	**539 148**
			42 mm	**VSVA-B-P53E-ZD-D1-2AT1L**	**543 688**
	P	2x 3/2-way valve, single solenoid, reverse operation, normally open	18 mm	**VSVA-B-T32F-AZD-A2-2AT1L**	**539 166**
			26 mm	**VSVA-B-T32F-AZD-A1-2AT1L**	**539 140**
			42 mm	**VSVA-B-T32F-AZD-D1-2AT1L**	**543 680**
	Q	2x 3/2-way valve, single solenoid, reverse operation, normally closed	18 mm	**VSVA-B-T32N-AZD-A2-2AT1L**	**539 164**
			26 mm	**VSVA-B-T32N-AZD-A1-2AT1L**	**539 138**
			42 mm	**VSVA-B-T32N-AZD-D1-2AT1L**	**543 678**
	R	2x 3/2-way valve, single solenoid, reverse operation, 1x normally open, 1x normally closed	18 mm	**VSVA-B-T32W-AZD-A2-2AT1L**	**539 168**
			26 mm	**VSVA-B-T32W-AZD-A1-2AT1L**	**539 142**
			42 mm	**VSVA-B-T32W-AZD-D1-2AT1L**	**543 682**

Valve manifolds type 44 VTSA, ISO 15407-2/ISO 5599-2

Accessories

Ordering data					
Designation	Code	Description	Width	Type	Part No.
Right-hand end plate					
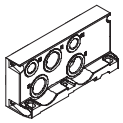	Metric thread				
	V	With supply air/exhaust air, internal pilot air supply, G½		**VABE-S6-1R-G12**	**539 234**
	X	With supply air/exhaust air, external pilot air supply, G½		**VABE-S6-1RZ-G12**	**539 236**
	NPT thread				
	V	With supply air/exhaust air, internal pilot air supply, NPT½		**VABE-S6-1R-N12**	**539 235**
	X	With supply air/exhaust air, external pilot air supply, NPT½		**VABE-S6-1RZ-N12**	**539 237**
End plate with pilot air selector					
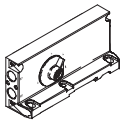	Metric thread				
	Y	Internal pilot air supply		**VABE-S6-1RZ-G-B1**	**539 238**
	U	Internal pilot air supply, ducted pilot exhaust air			
	Z	External pilot air supply			
	W	External pilot air supply, ducted pilot exhaust air			
	NPT thread				
	Y	Internal pilot air supply		**VABE-S6-1RZ-N-B1**	**539 239**
	U	Internal pilot air supply, ducted pilot exhaust air			
	Z	External pilot air supply			
	W	External pilot air supply, ducted pilot exhaust air			
Manifold sub-base, port pattern to ISO 15407-2 and ISO 5599-2					
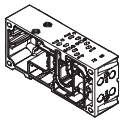	Metric thread				
	A	2 valve positions, 4 addresses, for double solenoid valves	18 mm	**VABV-S4-2S-G18-2T2**	**539 224**
	B	2 valve positions, 4 addresses, for double solenoid valves	26 mm	**VABV-S4-1S-G14-2T2**	**539 220**
	C	1 valve position, 2 addresses, for double solenoid valves	42 mm	**VABV-S2-1S-G38-T2**	**542 458**
	E	2 valve positions, 2 addresses, for single solenoid valves	18 mm	**VABV-S4-2S-G18-2T1**	**539 226**
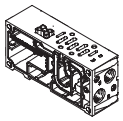	F	2 valve positions, 2 addresses, for single solenoid valves	26 mm	**VABV-S4-1S-G14-2T1**	**539 222**
	G	1 valve position, 1 address, for single solenoid valves	42 mm	**VABV-S2-1S-G38-T1**	**542 459**
	NPT thread				
	A	2 valve positions, 4 addresses, for double solenoid valves	18 mm	**VABV-S4-2S-N18-2T2**	**539 223**
	B	2 valve positions, 4 addresses, for double solenoid valves	26 mm	**VABV-S4-1S-N14-2T2**	**539 219**
	C	1 valve position, 2 addresses, for double solenoid valves	42 mm	**VABV-S2-1S-N38-T2**	**542 460**
	E	2 valve positions, 2 addresses, for single solenoid valves	18 mm	**VABV-S4-2S-N18-2T1**	**539 225**
	F	2 valve positions, 2 addresses, for single solenoid valves	26 mm	**VABV-S4-1S-N14-2T1**	**539 221**
	G	1 valve position, 1 address, for single solenoid valves	42 mm	**VABV-S2-1S-N38-T1**	**542 461**

Note: All metric products can be used within inch tubing systems via hybrid fittings (➔ Overview on page 88)

Valve manifolds type 44 VTSA, ISO 15407-2/ISO 5599-2

Accessories

Ordering data					
Designation	Code	Description	Width	Type	Part No.
Individual sub-base, port pattern to ISO 15407-2 and ISO 5599-2, electrical connection via plug connector M12					
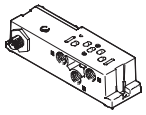	Metric thread, internal pilot air supply				
	–	Connections at side, G1/8	18 mm	**VABS-S4-2S-G18-B-R3**	**541 070**
	–	Connections at side, G1/4	26 mm	**VABS-S4-1S-G14-B-R3**	**541 069**
	–	Connections at side, G3/8	42 mm	**VABS-S2-1S-G38-B-R3**	**546 104**
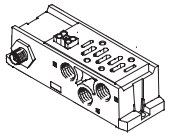	Metric thread, external pilot air supply				
	–	Connections at side, G1/8	18 mm	**VABS-S4-2S-G18-R3**	**541 064**
	–	Connections at side, G1/4	26 mm	**VABS-S4-1S-G14-R3**	**541 063**
	–	Connections at side, G3/8	42 mm	**VABS-S2-1S-G38-R3**	**546 101**
Individual sub-base, port pattern to ISO 15407-2, electrical connection via cable terminals					
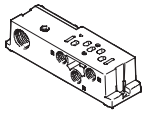	Metric thread, internal pilot air supply				
	–	Connections at side, G1/8	18 mm	**VABS-S4-2S-G18-B-K2**	**541 067**
	–	Connections at side, G1/4	26 mm	**VABS-S4-1S-G14-B-K2**	**541 065**
	Metric thread, external pilot air supply				
	–	Connections at side, G1/8	18 mm	**VABS-S4-2S-G18-K2**	**539 723**
	–	Connections at side, G1/4	26 mm	**VABS-S4-1S-G14-K2**	**539 725**
	NPT thread, internal pilot air supply				
	–	Connections at side, 1/8NPT	18 mm	**VABS-S4-2S-N18-B-K2**	**541 068**
	–	Connections at side, 1/4NPT	26 mm	**VABS-S4-1S-N14-B-K2**	**541 066**
	NPT thread, external pilot air supply				
	–	Connections at side, 1/8NPT	18 mm	**VABS-S4-2S-N18-K2**	**539 724**
	–	Connections at side, 1/4NPT	26 mm	**VABS-S4-1S-N14-K2**	**539 726**
Individual sub-base, port pattern to ISO 5599-2, electrical connection via spring-loaded terminal					
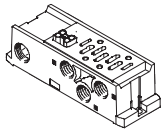	Metric thread, internal pilot air supply				
	–	Connections at side, G3/8	42 mm	**VABS-S2-1S-G38-B-C1**	**546 762**
	Metric thread, external pilot air supply				
	–	Connections at side, G3/8	42 mm	**VABS-S2-1S-G38-C1**	**546 760**
	NPT thread, internal pilot air supply				
	–	Connections at side, 3/8NPT	42 mm	**VABS-S2-1S-N38-B-C1**	**546 763**
	NPT thread, external pilot air supply				
	–	Connections at side, 3/8NPT	42 mm	**VABS-S2-1S-N38-C1**	**546 761**
Individual sub-base, port pattern to ISO 5599-2, electrical connection for self-assembly					
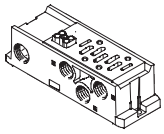	Metric thread, internal pilot air supply				
	–	Connections at side, G3/8	42 mm	**VABS-S2-1S-G38-B-K1**	**546 102**
	Metric thread, external pilot air supply				
	–	Connections at side, G3/8	42 mm	**VABS-S2-1S-G38-K1**	**546 099**
	NPT thread, internal pilot air supply				
	–	Connections at side, 3/8NPT	42 mm	**VABS-S2-1S-N38-B-K1**	**546 103**
	NPT thread, external pilot air supply				
	–	Connections at side, 3/8NPT	42 mm	**VABS-S2-1S-N38-K1**	**546 100**

Note: All metric products can be used within inch tubing systems via hybrid fittings (➔ Overview on page 88)

Valve manifolds type 44 VTSA, ISO 15407-2/ISO 5599-2

Accessories

Ordering data					
Designation	Code	Description	Width	Type	Part No.
Separator plate					
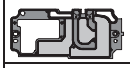	S	Duct separation 1, 3, 5		**VABD-S6-10-P3-C**	**539 228**
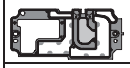	T	Duct separation 1		**VABD-S6-10-P1-C**	**539 227**
	R	Duct separation 3, 5		**VABD-S6-10-P2-C**	**539 229**
90° connection plate					
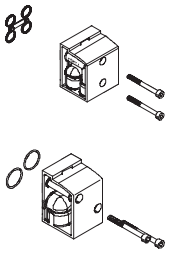	Metric thread				
	P	Outlet at bottom, connectinMetric thread G⅛	18 mm	**VABF-S4-2-A2G2-G18**	**539 719**
	P	Outlet at bottom, connectinMetric thread G¼	26 mm	**VABF-S4-1-A2G2-G14**	**539 721**
	P	Outlet at bottom, connectinMetric thread G⅜	42 mm	**VABF-S2-1-A1G2-G38**	**546 097**
	NPT thread				
	P	Outlet at bottom, connectinMetric thread ⅛NPT	18 mm	**VABF-S4-2-A2G2-N18**	**539 720**
	P	Outlet at bottom, connectinMetric thread ¼NPT	26 mm	**VABF-S4-1-A2G2-N14**	**539 722**
	P	Outlet at bottom, connectinMetric thread ⅜NPT	42 mm	**VABF-S2-1-A1G2-N38**	**546 098**
Supply plate					
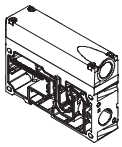	Metric thread				
	L	With exhaust plate, 3/5 common, G½		**VABF-S6-10-P1A7-G12**	**539 231**
	K	With exhaust port cover, 3/5 separated, G½		**VABF-S6-10-P1A6-G12**	**539 230**
	NPT thread				
	L	With exhaust plate, 3/5 common, NPT½		**VABF-S6-10-P1A7-N12**	**539 233**
	K	With exhaust port cover, 3/5 separated, NPT½		**VABF-S6-10-P1A6-N12**	**539 232**
Vertical supply plate					
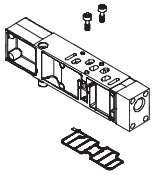	Metric thread				
	ZU	ConnectinMetric thread G⅛	18 mm	**VABF-S4-2-P1A3-G18**	**540 173**
		ConnectinMetric thread G¼	26 mm	**VABF-S4-1-P1A3-G14**	**540 171**
		ConnectinMetric thread G⅜	42 mm	**VABF-S2-1-P1A3-G38**	**546 093**
	NPT thread				
	ZU	ConnectinMetric thread ⅛NPT	18 mm	**VABF-S4-2-P1A3-N18**	**540 174**
		ConnectinMetric thread ¼NPT	26 mm	**VABF-S4-1-P1A3-N14**	**540 172**
		ConnectinMetric thread ⅜NPT	42 mm	**VABF-S2-1-P1A3-N38**	**546 094**

Note: All metric products can be used within inch tubing systems via hybrid fittings (➔ Overview on page 88)

Valve manifolds type 44 VTSA, ISO 15407-2/ISO 5599-2

Accessories

Ordering data					
Designation	Code	Description	Width	Type	Part No.
Regulator plate					
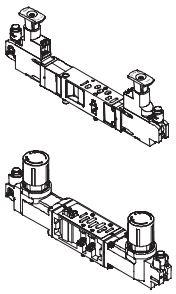	ZA	For port 1, 10 bar	18 mm	**VABF-S4-2-R1C2-C-10**	**540 153**
		For port 1, 10 bar	26 mm	**VABF-S4-1-R1C2-C-10**	**540 154**
		For port 1, 10 bar	42 mm	**VABF-S2-1-R1C2-C-10**	**546 084**
	ZF	For port 1, 6 bar	18 mm	**VABF-S4-2-R1C2-C-6**	**540 151**
		For port 1, 6 bar	26 mm	**VABF-S4-1-R1C2-C-6**	**540 152**
		For port 1, 6 bar	42 mm	**VABF-S2-1-R1C2-C-6**	**546 083**
	ZB[1)]	For port 4, 10 bar	18 mm	**VABF-S4-2-R3C2-C-10**	**540 157**
		For port 4, 10 bar	26 mm	**VABF-S4-1-R3C2-C-10**	**540 158**
		For port 4, 10 bar	42 mm	**VABF-S2-1-R3C2-C-10**	**546 086**
	ZG[1)]	For port 4, 6 bar	18 mm	**VABF-S4-2-R3C2-C-6**	**540 155**
		For port 4, 6 bar	26 mm	**VABF-S4-1-R3C2-C-6**	**540 156**
		For port 4, 6 bar	42 mm	**VABF-S2-1-R3C2-C-6**	**546 085**
	ZC	For port 2, 10 bar	18 mm	**VABF-S4-2-R2C2-C-10**	**540 161**
		For port 2, 10 bar	26 mm	**VABF-S4-1-R2C2-C-10**	**540 162**
		For port 2, 10 bar	42 mm	**VABF-S2-1-R2C2-C-10**	**546 088**
	ZH	For port 2, 6 bar	18 mm	**VABF-S4-2-R2C2-C-6**	**540 159**
		For port 2, 6 bar	26 mm	**VABF-S4-1-R2C2-C-6**	**540 160**
		For port 2, 6 bar	42 mm	**VABF-S2-1-R2C2-C-6**	**546 087**
	ZD	For ports 2 and 4, 10 bar	18 mm	**VABF-S4-2-R4C2-C-10**	**540 165**
		For ports 2 and 4, 10 bar	26 mm	**VABF-S4-1-R4C2-C-10**	**540 166**
		For ports 2 and 4, 10 bar	42 mm	**VABF-S2-1-R4C2-C-10**	**546 090**
	ZI	For ports 2 and 4, 6 bar	18 mm	**VABF-S4-2-R4C2-C-6**	**540 163**
		For ports 2 and 4, 6 bar	26 mm	**VABF-S4-1-R4C2-C-6**	**540 164**
		For ports 2 and 4, 6 bar	42 mm	**VABF-S2-1-R4C2-C-6**	**546 089**
	ZE	For ports 2 and 4, reversible, 10 bar	18 mm	**VABF-S4-2-R5C2-C-10**	**540 169**
		For ports 2 and 4, reversible, 10 bar	26 mm	**VABF-S4-1-R5C2-C-10**	**540 170**
		For ports 2 and 4, reversible, 10 bar	42 mm	**VABF-S2-1-R5C2-C-10**	**546 092**
	ZJ	For ports 2 and 4, reversible, 6 bar	18 mm	**VABF-S4-2-R5C2-C-6**	**540 167**
		For ports 2 and 4, reversible, 6 bar	26 mm	**VABF-S4-1-R5C2-C-6**	**540 168**
		For ports 2 and 4, reversible, 6 bar	42 mm	**VABF-S2-1-R5C2-C-6**	**546 091**
	ZL	For port 2, reversible, 10 bar	18 mm	**VABF-S4-2-R6C2-C-10**	**546 252**
		For port 2, reversible, 10 bar	26 mm	**VABF-S4-1-R6C2-C-10**	**546 251**
		For port 2, reversible, 10 bar	42 mm	**VABF-S2-1-R6C2-C-10**	**546 832**
	ZN	For port 2, reversible, 6 bar	18 mm	**VABF-S4-2-R6C2-C-6**	**546 248**
		For port 2, reversible, 6 bar	26 mm	**VABF-S4-1-R6C2-C-6**	**546 247**
		For port 2, reversible, 6 bar	42 mm	**VABF-S2-1-R6C2-C-6**	**546 831**
	ZK[1)]	For port 4, reversible, 10 bar	18 mm	**VABF-S4-2-R7C2-C-10**	**546 254**
		For port 4, reversible, 10 bar	26 mm	**VABF-S4-1-R7C2-C-10**	**546 253**
		For port 4, reversible, 10 bar	42 mm	**VABF-S2-1-R7C2-C-10**	**546 834**
	ZM[1)]	For port 4, reversible, 6 bar	18 mm	**VABF-S4-2-R7C2-C-6**	**546 250**
		For port 4, reversible, 6 bar	26 mm	**VABF-S4-1-R7C2-C-6**	**546 249**
		For port 4, reversible, 6 bar	42 mm	**VABF-S2-1-R7C2-C-6**	**546 833**

1) Also suitable for symmetrical valves

Valve manifolds type 44 VTSA, ISO 15407-2/ISO 5599-2

Accessories

Ordering data					
Designation	Code	Description	Width	Type	Part No.
Regulator plate for symmetrical valves					
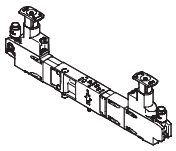	ZAY	For port 1, 10 bar	18 mm	**VABF-S4-2-R1C2-C-10E**	**560 756**
		For port 1, 10 bar	26 mm	**VABF-S4-1-R1C2-C-10E**	**560 757**
	ZFY	For port 1, 6 bar	18 mm	**VABF-S4-2-R1C2-C-6E**	**560 758**
		For port 1, 6 bar	26 mm	**VABF-S4-1-R1C2-C-6E**	**549 876**
	ZCY	For port 2, 10 bar	18 mm	**VABF-S4-2-R2C2-C-10E**	**560 763**
		For port 2, 10 bar	26 mm	**VABF-S4-1-R2C2-C-10E**	**560 764**
	ZHY	For port 2, 6 bar	18 mm	**VABF-S4-2-R2C2-C-6E**	**560 765**
		For port 2, 6 bar	26 mm	**VABF-S4-1-R2C2-C-6E**	**560 766**
	ZDY	For ports 2 and 4, 10 bar	18 mm	**VABF-S4-2-R4C2-C-10E**	**560 767**
		For ports 2 and 4, 10 bar	26 mm	**VABF-S4-1-R4C2-C-10E**	**560 768**
	ZIY	For ports 2 and 4, 6 bar	18 mm	**VABF-S4-2-R4C2-C-6E**	**560 769**
		For ports 2 and 4, 6 bar	26 mm	**VABF-S4-1-R4C2-C-6E**	**560 770**
	ZEY	For ports 2 and 4, reversible, 10 bar	18 mm	**VABF-S4-2-R5C2-C-10E**	**560 771**
		For ports 2 and 4, reversible, 10 bar	26 mm	**VABF-S4-1-R5C2-C-10E**	**560 772**
	ZJY	For ports 2 and 4, reversible, 6 bar	18 mm	**VABF-S4-2-R5C2-C-6E**	**560 773**
		For ports 2 and 4, reversible, 6 bar	26 mm	**VABF-S4-1-R5C2-C-6E**	**560 774**
	ZLY	For port 2, reversible, 10 bar	18 mm	**VABF-S4-2-R6C2-C-10E**	**560 775**
		For port 2, reversible, 10 bar	26 mm	**VABF-S4-1-R6C2-C-10E**	**560 776**
	ZNY	For port 2, reversible, 6 bar	18 mm	**VABF-S4-2-R6C2-C-6E**	**560 777**
		For port 2, reversible, 6 bar	26 mm	**VABF-S4-1-R6C2-C-6E**	**560 778**

Valve manifolds type 44 VTSA, ISO 15407-2/ISO 5599-2

Accessories

Ordering data					
Designation	Code	Description	Width	Type	Part No.
Pressure gauge					
	T	With cartridge connection for regulator, 10 bar for regulator plate, code ZA, ZB, ZC, ZD, ZE	18 mm	**PAGN-26-16-P10**	**543 487**
			26 mm		
			42 mm	**PAGN-40-16-P10**	**548 010**
	U	With cartridge connection for regulator, 6 bar for regulator plate, code ZF, ZG, ZH, ZI, ZJ	18 mm	**PAGN-26-10-P10**	**543 488**
			26 mm		
			42 mm	**PAGN-40-10-P10**	**548 009**
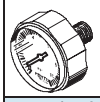	–	For soft-start valve	–	**MA-27-10-M5**	**526 323**
Cartridge for regulator plate					
	–	For tubing O.D. 4 mm		**QSP10-4**	**172 972**
	–	For tubing O.D. 3/16”		**QSP10-3/16U**	**172 975**
Flow control plate					
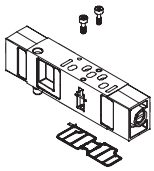	X	Controls the flow of exhaust air downstream of the valve to ducts 3 and 5	18 mm	**VABF-S4-2-F1B1-C**	**540 176**
			26 mm	**VABF-S4-1-F1B1-C**	**540 175**
			42 mm	**VABF-S2-1-F1B1-C**	**546 095**
Vertical pressure shut-off plate					
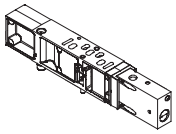	ZT	2/2-way valve for shutting off the operating pressure at the valve position	18 mm	**VABF-S4-2-L1D1-C**	**542 884**
			26 mm	**VABF-S4-1-L1D1-C**	**542 885**
			42 mm	**VABF-S2-1-L1D1-C**	**546 096**
Multi-pin node					
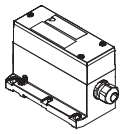	T	Tension spring, for Metric thread, 36-pin		**VABE-S6-1LF-C-M1-C36M**	**543 412**
		Tension spring, for NPT connection, 36-pin		**VABE-S6-1LF-C-M1-C36N**	**543 413**
	MP1	Sub-D plug, 37-pin		**VABE-S6-1LT-C-M1-S37**	**543 414**
	MP4	Round plug, 19-pin		**VABE-S6-1LF-C-M1-R19**	**543 415**
Individual electrical connection					
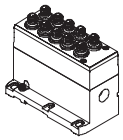	-MP2	Multi-pin node with individual connection M12, 6-way		**VABE-S6-LT-C-S6-R5**	**549 046**
	-MP3	Multi-pin node with individual connection M12, 10-way		**VABE-S6-LT-C-S10-R5**	**549 047**
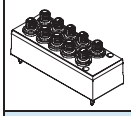	–	Cover for individual connection M12, 6-way		**VAEM-S6-C-S6-R5**	**549 048**
	–	Cover for individual connection M12, 10-way		**VAEM-S6-C-S10-R5**	**549 049**
Pneumatic interface					
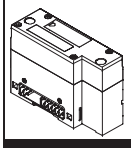	–	For electrical terminal CPX in plastic design		**VABA-S6-1-X1**	**543 416**
	–	For electrical terminal CPX in metal design		**VABA-S6-1-X2**	**550 663**

Valve manifolds type 44 VTSA, ISO 15407-2/ISO 5599-2

Accessories

Ordering data				
Designation	Code	Description	Type	Part No.
Pneumatic interface				
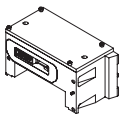	–	For electrical peripherals type 03	**VABA-S6-1-E1**	**559 719**
Input module for electrical peripherals type 03				
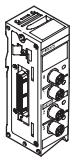	–	8 inputs, PNP, 5-pin	**VIGE-03-FB-8-5POL**	**175 555**
	–	8 inputs, PNP, 5-pin, fuse	**VIGE-03-FB-8-5POL-S**	**188 521**
Output module for electrical peripherals type 03				
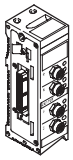	–	4 outputs, PNP, 5-pin	**VIGA-03-FB-4-5POL**	**175 641**
Input/output module for electrical peripherals type 03				
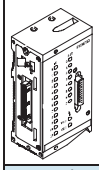	–	12 inputs/8 outputs, PNP, Sub-D	**VIEA-03-FB-12E-8A-SUBD**	**174 483**
Bus node				
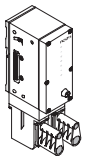	–	For electrical peripherals type 03	**IFB21-03**	**188 844**
Electrical interface for AS-interface				
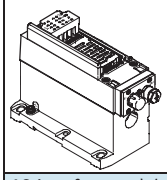	–	4 inputs/4 outputs	**VABE-S6-1LF-C-A4**	**549 042**
	–	8 inputs/8 outputs	**VABE-S6-1LF-C-A8**	**549 043**
AS-interface module				
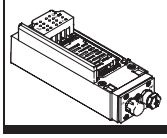	–	4 inputs/4 outputs	**VAEM-S6-S-FAS-4-4E**	**549 044**
	–	8 inputs/8 outputs	**VAEM-S6-S-FAS-8-8E**	**549 045**

Valve manifolds type 44 VTSA, ISO 15407-2/ISO 5599-2

Accessories

Ordering data					
Designation	Code	Description		Type	Part No.
Connection block for AS-interface					
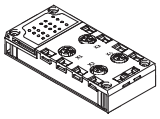	X	4xM12, 5-pin, double, socket		**CPX-AB-4-M12x2-5POL**	**195 704**
	GW	4xM12, 5-pin, socket, metal thread		**CPX-AB-4-M12x2-5POL-R**	**541 254**
	R	8xM8, 3-pin, socket		**CPX-AB-8-M8-3POL**	**195 706**
	J	8xspring-loaded terminal, Cage Clamp®, 4-pin		**CPX-AB-8-KL-4POL**	**195 708**
	H	4xHarax®, 4-pin, socket		**CPX-AB-4-HAR-4POL**	**525 636**
	B	Sub-D 25-pin, socket		**CPX-AB-1-SUB-BU-25POL**	**525 676**
Connecting cable with Sub-D plug socket					
	Polyurethane, IP65				
	GA	Connecting cable for max. 8 solenoid coils, 10-pin, suitable for energy chains		**NEBV-S1W37-E-2,5-LE10**	**539 240**
	GB			**NEBV-S1W37-E-5-LE10**	**539 241**
	GC			**NEBV-S1W37-E-10-LE10**	**539 242**
	GD	Connecting cable for max. 22 solenoid coils, 26-pin, suitable for energy chains		**NEBV-S1W37-E-2,5-LE26**	**539 243**
	GE			**NEBV-S1W37-E-5-LE26**	**539 244**
	GF			**NEBV-S1W37-E-10-LE26**	**539 245**
	GG	Connecting cable for max. 32 solenoid coils, 37-pin		**NEBV-S1W37-K-2,5-LE37**	**539 246**
	GH			**NEBV-S1W37-K-5-LE37**	**539 247**
	GI			**NEBV-S1W37-K-10-LE37**	**539 248**
	Polyvinyl chloride, IP65				
	GK	Connecting cable for max. 8 solenoid coils, 10-pin		**NEBV-S1W37-KM-2,5-LE10**	**543 271**
	GL			**NEBV-S1W37-KM-5-LE10**	**543 272**
	GM			**NEBV-S1W37-KM-10-LE10**	**543 273**
	GN	Connecting cable for max. 22 solenoid coils, 27-pin		**NEBV-S1W37-KM-2,5-LE27**	**543 274**
	GO			**NEBV-S1W37-KM-5-LE27**	**543 275**
	GP			**NEBV-S1W37-KM-10-LE27**	**543 276**
	GQ	Connecting cable for max. 32 solenoid coils, 37-pin		**NEBV-S1W37-KM-2,5-LE37**	**543 277**
	GR			**NEBV-S1W37-KM-5-LE37**	**543 278**
	GS			**NEBV-S1W37-KM-10-LE37**	**543 279**
Cover for multi-pin plug					
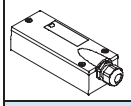	–	For user configuration		**NECV-S1W37**	**545 974**
Cover					
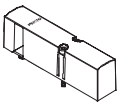	L	Blanking plate for vacant position	18 mm	**VABB-S4-2-WT**	**539 213**
			26 mm	**VABB-S4-1-WT**	**539 212**
			42 mm	**VABB-S2-1-WT**	**543 186**
	N	Cover cap for manual override, non-detenting	10 pieces	**VAMC-S6-CH**	**541 010**
	V	Cover cap for manual override, covered	10 pieces	**VAMC-S6-CS**	**541 011**
	–	End cap for electrical manifold module, size 18 mm and 26 mm	10 pieces	**VABD-S4-E-C**	**547 713**
Inscription label holder					
	B	Clip-on inscription label holder for valve cap	5 pieces	**ASCF-T-S6**	**540 888**
	T	Inscription label holder for manifold blocks	5 pieces	**ASCF-M-S6**	**540 889**

Ordering Data – Push-in Fittings QS, Metric Thread							Technical Data ➔ www.festo.com/catalog/QS
	For tubing O.D. [in]	M3		M5		M7	
		Part No.	Type	Part No.	Type	Part No.	Type
With external hex							
	1/8	–		**533209**	**QS-H-M5-1/8-U-M[1)]**	–	
	5/32	–		**533210**	**QS-H-M5-5/32-U-M**	–	
	3/16	–		**533211**	**QS-H-M5-3/16-U-M**	–	
	1/4	–		**533212**	**QS-H-M5-1/4-U-M**	–	
With internal hex							
	1/8	**183751**	**QSM-M3-1/8-I-U-M**	**183749**	**QSM-M5-1/8-I-U-M**	**183738**	**QSM-M7-1/8-I-U-M**
	5/32	**130592**	**QSM-M3-5/32-I-U-M**	**130593**	**QSM-M5-5/32-I-U-M**	–	
	3/16	**183752**	**QSM-M3-3/16-I-U-M**	**183750**	**QSM-M5-3/16-I-U-M**	**183739**	**QSM-M7-3/16-I-U-M**
	1/4	–		**130591**	**QSM-M5-1/4-I-U-M**	**183740**	**QSM-M7-1/4-I-U-M**

1) Scope of delivery 10 pieces

Ordering Data – Push-in Fittings QS, Taper-thread									Technical Data ➔ www.festo.com/catalog/QS
	For tubing O.D. [in]	R⅛		R¼		R⅜		R½	
		Part No.	Type	Part No.	Type	Part No.	Type	Part No.	Type
With external hex									
	1/8	**533213**	**QS-H-1/8-1/8-U-M**	–		–		–	
	5/32	**533214**	**QS-H-1/8-5/32-U-M**	–		–		–	
	3/16	**533215**	**QS-H-1/8-3/16-U-M**	**533218**	**QS-H-1/4-3/16-U-M**	–		–	
	1/4	**533216**	**QS-H-1/8-1/4-U-M**	**533219**	**QS-H-1/4-1/4-U-M**	**533222**	**QS-H-3/8-1/4-U-M**	–	
	5/16	**533217**	**QS-H-1/8-5/16-U-M**	**533220**	**QS-H-1/4-5/16-U-M**	**533223**	**QS-H-3/8-5/16-U-M**	–	
	3/8	–		**533221**	**QS-H-1/4-3/8-U-M**	**533224**	**QS-H-3/8-3/8-U-M**	**533226**	**QS-H-1/2-3/8-U-M**
	1/2	–		–		**533225**	**QS-H-3/8-1/2-U-M**	**533227**	**QS-H-1/2-1/2-U-M**
With internal hex									
	1/4	**183741**	**QS-1/8-1/4-I-U-M**	**192809**	**QS-1/4-1/4-I-U-M**	–		–	
	5/16	**183742**	**QS-1/8-5/16-I-U-M**	**183743**	**QS-1/4-5/16-I-U-M**	**183745**	**QS-3/8-5/16-I-U-M**	–	
	3/8	–		**183744**	**QS-1/4-3/8-I-U-M**	**183746**	**QS-3/8-3/8-I-U-M**	**183747**	**QS-1/2-3/8-I-U-M**
	1/2	–		–		–		**183748**	**QS-1/2-1/2-I-U-M**

Note: All metric products can be used within inch tubing systems via hybrid fittings (➔ Overview on page 88)

Valve manifolds type 44 VTSA, ISO 15407-2/ISO 5599-2

Accessories

Ordering data					
Designation	Code	Description		Type	Part No.
Push-in fitting					
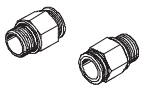	Metric thread				
	–	ConnectinMetric thread G¼ for tubing O.D. 10 mm	10 pieces	**QS-G¼-10**	**186 101**
		ConnectinMetric thread G¼ for tubing O.D. 8 mm	10 pieces	**QS-G¼-8**	**186 099**
		ConnectinMetric thread G⅛ for tubing O.D. 10 mm	10 pieces	**QS-G⅛-10**	**190 643**
		ConnectinMetric thread G⅛ for tubing O.D. 8 mm	10 pieces	**QS-G⅛-8**	**186 098**
		ConnectinMetric thread G⅛ for tubing O.D. 6 mm	10 pieces	**QS-G⅛-6**	**186 096**
		ConnectinMetric thread G½ for tubing O.D. 16 mm	1 piece	**QS-G½-16**	**186 105**
		ConnectinMetric thread G⅜ for tubing O.D. 10 mm	10 pieces	**QS-G⅜-10**	**186 102**
		ConnectinMetric thread G⅜ for tubing O.D. 12 mm	10 pieces	**QS-G⅜-12**	**186 103**
	NPT thread				
	–	ConnectinMetric thread ¼NPT for tubing O.D. 5/16”		**QS-¼-5/16-U**	**153 609**
		ConnectinMetric thread ¼NPT for tubing O.D. ½”		**QS-¼-½-U**	**190 681**
		ConnectinMetric thread ⅛NPT for tubing O.D. 5/16”		**QS-⅛-5/16-U**	**153 608**
		ConnectinMetric thread ⅛NPT for tubing O.D. ¼”		**QS-⅛-¼-U**	**153 605**
		ConnectinMetric thread ½NPT for tubing O.D. ½”		**QS-½-½-U**	**153 615**
		ConnectinMetric thread ½NPT for tubing O.D. ⅝”		**QS-½-⅝-U**	**190 682**
Silencer					
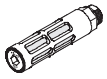	Metric thread				
	–	ConnectinMetric thread G¼		**U-¼**	**2316**
	L	ConnectinMetric thread G½		**U-½**	**2310**
	K	ConnectinMetric thread G½		**U-½-B**	**6844**
	NPT thread				
	–	ConnectinMetric thread ¼NPT		**U-¼-B-NPT**	**12 639**
	K, L	ConnectinMetric thread ½NPT		**U-½-B-NPT**	**12 741**
Blanking plug					
	Metric thread				
	–	Thread G⅛	10 pieces	**B-⅛**	**3568**
	–	Thread G¼	10 pieces	**B-¼**	**3569**
	NPT thread				
	–	Thread ⅛NPT	1 piece	**B-⅛-NPT**	**173 985**
	–	Thread ¼NPT	1 piece	**B-¼-NPT**	**174 165**
H-rail mounting					
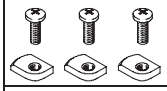	–	VTSAVTSA-F with fieldbus	3 pieces	**CPX-CPA-BG-NRH**	**526 032**
	–	VTSAVTSA-F with multi-pin plug	2 pieces	**CPA-BG-NRH**	**173 498**
Wall mounting					
	U	Mounting bracket		**VAME-S6-10-W**	**539 214**

Ordering data – Manuals					
Designation	Code	Description		Type	Part No.
	E	Manual for valve manifold VTSAVTSA-F	English	**P.BE-VTSA-44-EN**	**538 923**
	S		Spanish	**P.BE-VTSA-44-ES**	**538 924**
	F		French	**P.BE-VTSA-44-FR**	**538 925**

Product Range and Company Overview

A Complete Suite of Automation Services

Our experienced engineers provide complete support at every stage of your development process, including: conceptualization, analysis, engineering, design, assembly, documentation, validation, and production.

Custom Automation Components
Complete custom engineered solutions

Custom Control Cabinets
Comprehensive engineering support and on-site services

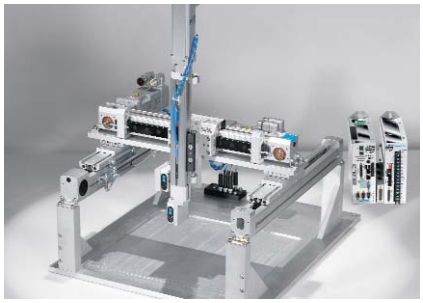

Complete Systems
Shipment, stocking and storage services

The Broadest Range of Automation Components

With a comprehensive line of more than 30,000 automation components, Festo is capable of solving the most complex automation requirements.

Electromechanical
Electromechanical actuators, motors, controllers & drives

Pneumatics
Pneumatic linear and rotary actuators, valves, and air supply

PLCs and I/O Devices
PLC's, operator interfaces, sensors and I/O devices

Supporting Advanced Automation... As No One Else Can!
Festo is a leading global manufacturer of pneumatic and electromechanical systems, components and controls for industrial automation, with more than 12,000 employees in 56 national headquarters serving more than 180 countries. For more than 80 years, Festo has continuously elevated the state of manufacturing with innovations and optimized motion control solutions that deliver higher performing, more profitable automated manufacturing and processing equipment. Our dedication to the advancement of automation extends beyond technology to the education and development of current and future automation and robotics designers with simulation tools, teaching programs, and on-site services.

Quality Assurance, ISO 9001 and ISO 14001 Certifications

Festo Corporation is committed to supply all Festo products and services that will meet or exceed our customers' requirements in product quality, delivery, customer service and satisfaction.

To meet this commitment, we strive to ensure a consistent, integrated, and systematic approach to management that will meet or exceed the requirements of the ISO 9001 standard for Quality Management and the ISO 14001 standard for Environmental Management.

9001: CERTCC5-16248-2006-AQ-ESN-TGA
ISO 9001
ISO 14001
DNV
Certified Company
14001: CERTCC5-16248A-2006-AQ-ESN-TGA

FSC Printed on recycled paper at New Horizon Graphic, Inc., FSC certified as an environmentally friendly printing plant.

Festo North America

United States

Customer Resource Center
502 Earth City Expy., Suite 125
Earth City, MO 63045

For ordering assistance, or to find
your nearest Festo Distributor,
Call: 1.800.99.FESTO
Fax: 1.800.96.FESTO
Email: customer.service@us.festo.com

For technical support,
Call: 1.866.GO.FESTO
Fax: 1.800.96.FESTO
Email: product.support@us.festo.com

Headquarters
Festo Corporation
395 Moreland Road
P.O. Box 18023
Hauppauge, NY 11788
www.festo.com/us

Sales Offices

Appleton
N. 922 Tower View Drive, Suite N
Greenville, WI 54942

Boston
120 Presidential Way, Suite 330
Woburn, MA 01801

Chicago
1441 East Business Center Drive
Mt. Prospect, IL 60056

Dallas
1825 Lakeway Drive, Suite 600
Lewisville, TX 75057

Detroit - Automotive Engineering Center
2601 Cambridge Court, Suite 320
Auburn Hills, MI 48326

New York
395 Moreland Road
Hauppauge, NY 11788

Silicon Valley
4935 Southfront Road, Suite F
Livermore, CA 94550

Design and Manufacturing Operations

East: 395 Moreland Road, Hauppauge, NY 11788

Central: 1441 East Business Center Drive, Mt. Prospect, IL 60056

West: 4935 Southfront Road, Suite F, Livermore, CA 94550

Mexico

Headquarters
Festo Pneumatic, S.A.
Av. Ceylán 3, Col. Tequesquinahuac
54020 Tlalnepantla, Edo. de México
Call: 011 52 [55] 53 21 66 00
Fax: 011 52 [55] 53 21 66 65
Email: festo.mexico@mx.festo.com
www.festo.com/mx

Canada

Headquarters
Festo Inc.
5300 Explorer Drive
Mississauga, Ontario L4W 5G4
Call: 1.905.624.9000
Fax: 1.905.624.9001
Email: info.ca@ca.festo.com
www.festo.com/ca

Festo Worldwide

Argentina Australia Austria Belarus Belgium Brazil Bulgaria Canada Chile China Colombia Croatia Czech Republic Denmark Estonia Finland France Germany Great Britain Greece Hong Kong Hungary India Indonesia Iran Ireland Israel Italy Japan Latvia Lithuania Malaysia Mexico Netherlands New Zealand Norway Peru Philippines Poland Romania Russia Serbia Singapore Slovakia Slovenia South Africa South Korea Spain Sweden Switzerland Taiwan Thailand Turkey Ukraine United States Venezuela

www.festo.com