Vacuum generators VADM/VADMI

Key features

Product overview

All Festo vacuum generators have a single-stage design and operate according to the Venturi principle.
The product series described below have been designed for a wide range of applications. The different performance classes of the individual product series make it possible to select vacuum generators tailored to suit the specific requirements of each application.

Standard and inline ejectors

VN

Data sheets ➔ Internet: vn

- Nominal width
  0.45 ... 3 mm
- Max. vacuum
  93%
- Temperature range
  0 ... +60°C

- A range of extremely effective generators suitable for use directly in the work space
- Available with straight or T-shaped housing
- Minimal space required
- Cost-effective
- No wearing parts
- Extremely fast evacuation time
- Optional vacuum switch
- Optional additional functions:
  – Integrated ejector pulse
  – Electrical control for vacuum ON/OFF
  – Combination of ejector pulse and actuation

VAD/VAK

Data sheets ➔ Internet: vad

- Nominal width
  0.5 ... 1.5 mm
- Max. vacuum
  80%
- Temperature range
  –20 ... +80°C

- Range of vacuum generators with sturdy aluminium housing
- VAK-...: integrated volume,
  VAD-...: connection for external volume
- Maintenance-free
- VAK: reliable setting down of workpieces

Key features

Compact ejectors

OVEM

Data sheets ➔ Internet: ovem

- Nominal width
  0.45 ... 2 mm
- Max. vacuum
  93%
- Temperature range
  0 ... +50°C

- Compact design
- Minimal installation work required
- Short switching times
- Integrated solenoid valves for vacuum ON/OFF and ejector pulse
- Filter with display
- Vacuum sensor with LCD display for continuous monitoring of the entire vacuum system
- Optional air saving function
- Reliable setting down of workpieces
- Blocking of multiple vacuum generators on a common supply manifold

VADM/VADMI

➔ Page 7

- Nominal width
  0.45 ... 3 mm
- Max. vacuum
  85%
- Temperature range
  0 ... +60°C

- Compact design
- Minimal installation work required
- Short switching times
- Integrated solenoid valve (on/off)
- VADMI: additional integrated solenoid valve for ejector pulse
- Filter with display
- Optional air saving function
- Optional vacuum switch
- Reliable setting down of workpieces

VAD-M

Data sheets ➔ Internet: vad-m

- Nominal width
  0.7 ... 2 mm
- Max. vacuum
  85%
- Temperature range
  0 ... +40°C

- Compact design
- Minimal installation work required
- Short switching times
- Integrated solenoid valve (on/off)
- VAD-M-I: additional integrated solenoid valve for ejector pulse
- Reliable setting down of workpieces

Key features

At a glance

- Compact and sturdy design
- Components with numerous individual functions form a single unit
- Extremely short switching times thanks to integrated solenoid valves
- No external or additional components required
- Easily fitted thanks to grid dimensions and therefore particularly suitable for handling tasks
- Cost effective assembly as the solenoid valve, vacuum generator and silencer are all in a single unit
- Degree of protection IP65
- With manual override
- With integrated silencer for reducing exhaust noise
- With integrated filter for the air to be evacuated and an inspection window which shows the degree of filter contamination
- With or without integrated vacuum switch to monitor the vacuum with PNP or NPN output
- With 2 vacuum ports, optional

Vacuum generator VADM

The compressed air supply of these vacuum generators is controlled by the integrated solenoid valve.
When the power supply is switched on, the valve is actuated and the flow of compressed air generates a vacuum at the vacuum ports using the ejector principle.
Suction stops when the power to the valve is switched off.
The integrated silencer reduces exhaust noise to a minimum.
With the vacuum generators VADM-...-P/N the vacuum can be monitored by a vacuum switch.

- Integrated solenoid valve for:
  – Vacuum ON/OFF

Vacuum generator VADMI with ejector pulse

Compressed air enters the vacuum generator when a voltage signal is applied to the integrated solenoid valve, thereby creating a vacuum.
Once the voltage is switched off at the vacuum valve and switched on at the ejector pulse valve, the vacuum is rapidly purged at port 2 as a result of the application of pressure.
The integrated silencer reduces exhaust noise to a minimum.
With the vacuum generators VADMI-...-P/-N, the vacuum can be monitored using a vacuum switch.

- Two integrated solenoid valves for:
  – Vacuum ON/OFF
  – Ejector pulse
- With sensing interface
- With integrated check valve as safety function
- Air saving function possible in combination with a vacuum switch and a higher-level logic circuit (e.g. PLC)

Vacuum generator VADMI-...-LS with ejector pulse and air saving function

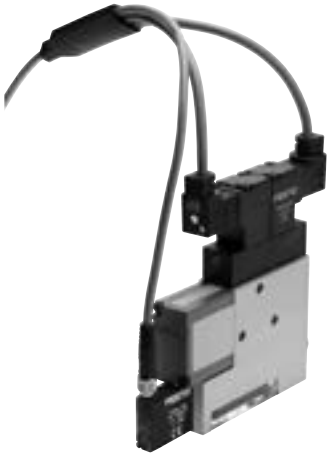

This vacuum generator has an identical design to the other VADMI types. This ejector also has an integrated vacuum switch with air saving function:
If the pressure drops below the set vacuum range, vacuum generation is switched on automatically.

- Two integrated solenoid valves for:
  – Vacuum ON/OFF
  – Ejector pulse
- With sensing interface
- With integrated check valve as safety function
- Vacuum switch for pressure monitoring
- Integrated air saving function
- Cable kit with plug sockets for solenoid coils and vacuum switches included in the scope of delivery

Key features

Air saving function with VADMI-...-P/N and external controller

The conventional vacuum switch ➔ A cost-effective energy-saving measure

The vacuum range for holding the workpiece is set on the vacuum switch using the two potentiometers. The lower limit defines the minimum value.
Provided the vacuum level is within this range, reliable workpiece transport is guaranteed.

The vacuum generator VADMI is only activated by the external controller if the level drops below the minimum value and is deactivated again once the maximum value is regained.
A check valve prevents the vacuum level from being reduced during the inactive phase of vacuum generation.

The functional sequence

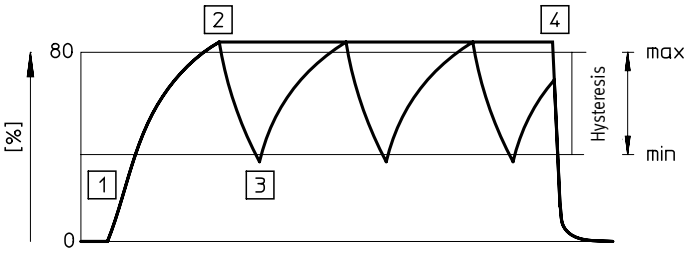

Vacuum curve

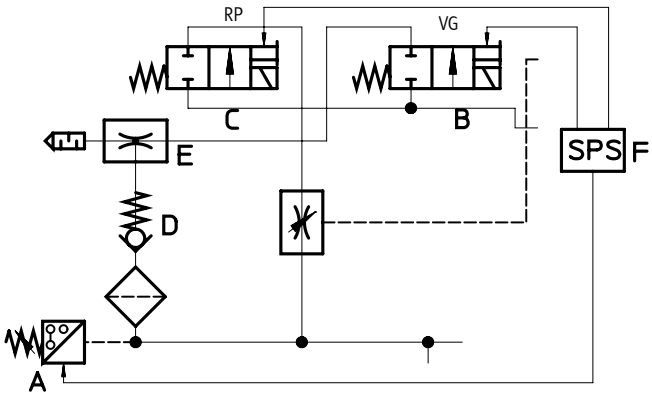

RP	Solenoid valve for ejector pulse	E	Vacuum generator
VG	Solenoid valve for vacuum ON/OFF	D	Check valve
		C	Ejector pulse
		A	Vacuum switch

Vacuum on

[1] External controller F switches on the VG solenoid
- ➔ Valve for compressed air supply B is opened
- ➔ Vacuum generation E is activated

Vacuum stop

[2] The specified maximum level is achieved:
- ➔ Vacuum switch A sends a signal to the external controller F
- ➔ Controller switches the VG solenoid off
- ➔ Vacuum generation E interrupted
- ➔ Check valve D prevents the vacuum level from being reduced

Vacuum on

[3] Leakage causes the vacuum level to drop to the minimum value
- ➔ Vacuum switch A sends a signal to the external controller F
- ➔ Controller F switches the VG solenoid back on
- ➔ Vacuum generation E is active again
- ➔ Constant repetition of points 2 and 3

Cycle ended: vacuum off

[4] Transport process ended
- ➔ External controller F deactivates VG solenoid
- ➔ Vacuum generation E is ended
- ➔ External controller F switches on RP solenoid
- ➔ Ejector pulse C activated
- ➔ Workpiece is set down

Key features

Air saving function and fault signal with VADMI-...-LS-P/N

The further development of the vacuum switch

When combined with the supplied cable kit, the vacuum generator VADMI-...-LS-P/N has an air saving function. The vacuum range for holding the workpiece is set on the vacuum switch using the two potentiometers.
The vacuum switch generates a pulsating signal which only actuates the solenoid for vacuum ON/OFF in the vacuum generator when the vacuum has fallen below the minimum value, for example due to leakage.
At all other times, the vacuum is maintained with the help of the check valve, even when the vacuum generator is not switched on. In addition, a status signal A1 can be interrogated which is connected to +24 V during normal operation, but which is switched to 0 whenever vacuum again falls below the critical value by 150 mbar due to a malfunction. This is the case, for example, if the workpiece has dropped off from the suction gripper and it is therefore no longer possible to generate the selected vacuum range.

The three control and supply cable harnesses are combined in one branch. Just one cable containing one signal wire and three power supply wires is routed from the branch to the PLC.
Given the decentralised control of the switching function, external actuation of the vacuum switching (air saving function) would be superfluous. As a result there is significantly less wiring.

Note

The vacuum switch may only be operated with the included cable kit.

The functional sequence

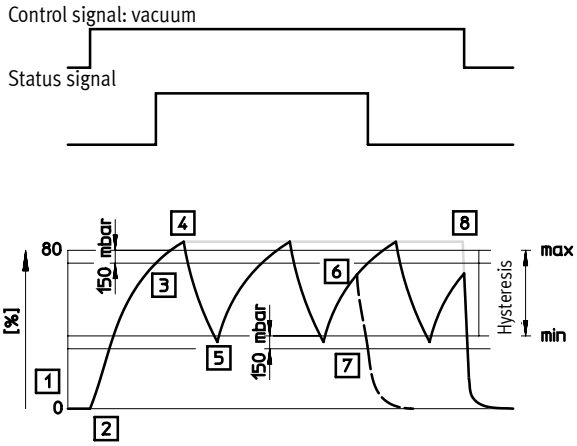

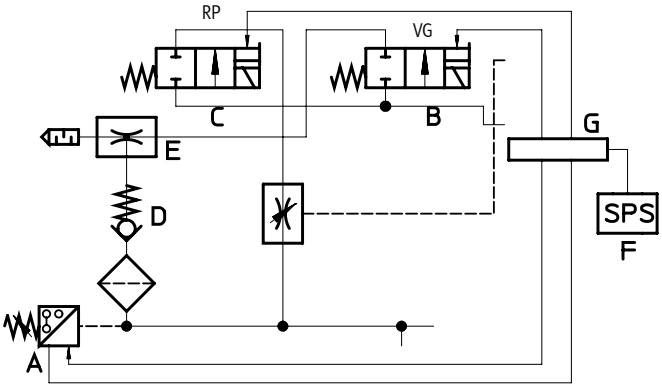

RP	Solenoid valve for ejector pulse	E	Vacuum generator
VG	Solenoid valve for vacuum ON/OFF	D	Check valve
		C	Ejector pulse
		G	Branch
		A	Vacuum switch

Start signal

[1] External controller F activates the vacuum switch
- ➔ Vacuum switch A checks the vacuum status
- ➔ No vacuum present

Vacuum on

[2] Vacuum switch activates the VG solenoid
- ➔ Valve for compressed air supply B is opened
- ➔ Vacuum generation E is activated

[3] Vacuum level exceeds 150 mbar below the maximum level
- ➔ Vacuum switch sends an enable signal to the external controller F
- ➔ Transport process can start

Vacuum stop

[4] The specified maximum level is achieved
- ➔ Vacuum switch A switches the VG solenoid off
- ➔ Compressed air supply stopped
- ➔ Vacuum generation E interrupted
- ➔ Check valve D prevents the vacuum level from being reduced

Vacuum on

[5] Leakage causes the vacuum level to drop to the minimum value
- ➔ Vacuum switch A switches the VG solenoid back on
- ➔ Vacuum generation E is active again

Fault: transport stop

[6] Major leakage causes an overly large drop in the vacuum level
- ➔ Vacuum generator E cannot compensate for the drop in level

[7] Vacuum level falls to 150 mbar below the minimum value
- ➔ Vacuum switch A sends an error message to the external controller F
- ➔ External controller F interrupts the transport process
- ➔ Vacuum generation E is ended

Cycle ended: vacuum off

[8] Transport process ended
- ➔ External controller F deactivates VG solenoid
- ➔ Vacuum generation E is ended
- ➔ External controller F switches on RP solenoid
- ➔ Ejector pulse C activated
- ➔ Workpiece is set down

Peripherals overview

VADM/VADMI-45/70

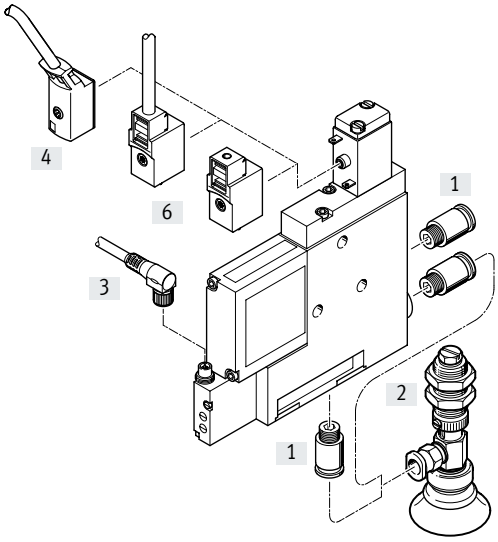

VADM/VADMI-95/140/200/300

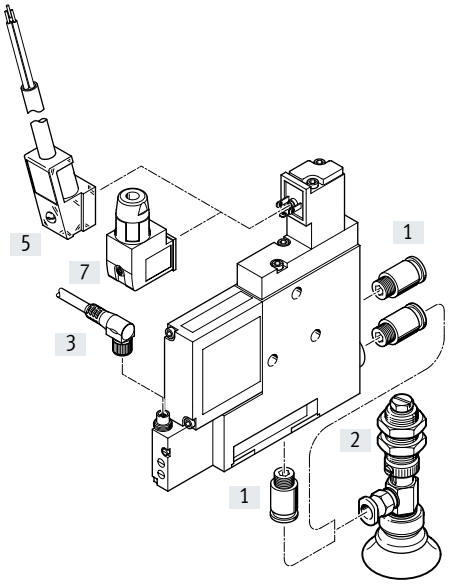

Mounting attachments and accessories				
		VADM/VADMI-45/70	VADM/VADMI-95/140/200/300	→ Page/Internet
[1]	Push-in fitting QS	■	■	qs
[2]	Suction gripper ESG	■	■	esg
[3]	Connecting cable NEBU-M8G4/M8W4	■	■	19
[4]	Connecting cable KMYZ-2	■	–	19
[5]	Plug socket with cable KMEB-1/2	–	■	19
[6]	Plug socket MSSD-ZBZC	■	–	19
[7]	Plug socket MSSD-EB	–	■	19
–	Suction cup holder ESH	■	■	esh
–	Suction cup ESS	■	■	ess
–	Illuminating seal MEB-LD	–	■	19

Type codes

001	Series	
VADMI	Vacuum generator with ejector pulse	
VADM	Vacuum generator without ejector pulse	

002	Nominal width of Laval nozzle	
45	0.45 mm	
70	0.7 mm	
95	0.95 mm	
140	1.4 mm	
200	2.0 mm	
300	3.0 mm	

003	Air reduction	
	None	
LS	With air saving circuit	

004	Output signal vacuum sensor	
	Without vacuum sensor	
P	With 1 switching output PNP	
N	With 1 switching output NPN	

Data sheet

Temperature range
0 ... +60°C

Operating pressure
1.5 ... 8 bar

www.festo.com

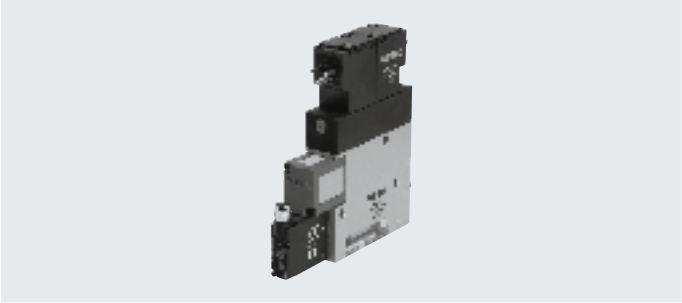

General technical data							
Type		VADM/VADMI					
		-45	-70	-95	-140	-200	-300
Nominal width of Laval nozzle	[mm]	0.45	0.7	0.95	1.4	2.0	3.0
Grid dimension	[mm]	10	15	18	22	22	22
Grade of filtration	[µm]	≤40					
Mounting position		Any					
Type of mounting		With through-hole					
		With female thread					
Pneumatic connection 1 (P)		M5	M5	G1/8	G1/8	G1/4	G1/4
Vacuum port (V)		M5	G1/8	G1/8	G1/4	G3/8	G3/8
Pneumatic connection 3 (R)		Integrated silencer					

Technical data – Design			
Type		VADM	VADMI
Ejector characteristic		High vacuum	
Silencer design		Closed	
Integrated function		Electric on/off valve	Electric on/off valve
		Filters	Filters
		–	Flow control valve
			Ejector pulse valve, electric
			Non-return valve
	-P/-N	Vacuum switch	Vacuum switch
	-LS-P/-N	–	Air saving function, electric
			Vacuum switch
Valve function		Closed	
Manual override		Non-detenting	

Data sheet

Operating and environmental conditions					
Type		VADM/VADMI			
		Without vacuum switch		With vacuum switch -P/N	
		-45/70	-95/140/200/300	-45/70	-95/140/200/300
Operating pressure	[bar]	1.5 ... 8	2 ... 8	1.5 ... 8	2 ... 8
Nominal operating pressure	[bar]	6			
Max. overload pressure	[bar]	–		5 (VADMI only)	
Operating medium		Compressed air to ISO 8573-1:2010 [7:4:4]			
Note on the operating/pilot medium		Operation with lubricated medium not possible			
Ambient temperature	[°C]	0 ... +60		0 ... +50	
Temperature of medium	[°C]	0 ... +60			
Corrosion resistance class CRC[1)]		2			
CE marking (see declaration of conformity)		–		To EU EMC Directive[2)]	
Certification		c UL us - Recognized (OL)			
		–		RCM	

1) Corrosion resistance class CRC 2 to Festo standard FN 940070
Moderate corrosion stress. Indoor applications in which condensation can occur. External visible parts with primarily decorative surface requirements which are in direct contact with a normal industrial environment.

2) For information about the area of use, see the EC declaration of conformity: www.festo.com/sp ➔ Certificates.
If the devices are subject to usage restrictions in residential, commercial or light-industrial environments, further measures for the reduction of the emitted interference may be necessary.

Performance data – High vacuum													
Type		VADM						VADMI					
		-45	-70	-95	-140	-200	-300	-45	-70	-95	-140	-200	-300
Max. vacuum	[%]	85						85					
Air supply time[1)] for 1 l volume, at p_1 = 6 bar	[s]	5.9	2.2	1.18	0.69	0.29	0.26	1.9	0.59	2.04	0.19	0.15	0.2

1) Time required to purge vacuum to –0.05 bar.

Technical data – Electrical connection		
Electrical connection		Plug
Operating voltage range	[V DC]	21.6 ... 26.4
Duty cycle	[%]	100
Degree of protection		IP65

Data sheet

Technical data – Vacuum switch					
Type		VADM/VADMI		VADMI	
		-P	-N	-LS-P	-LS-N
Mechanical					
Electrical connection		Plug M8x1, 4-pin		Only via supplied cable kit	
Measured variable		Relative pressure			
Measuring principle		Piezoresistive			
Pressure measuring range	[bar]	−1 ... 0			
Setting options		Potentiometer			
Threshold value setting range	[bar]	−0.9 ... 0		−0.9 ... −0.2	
Hysteresis setting range	[bar]	−0.5 ... −0.05		−0.6 ... −0.1	
Display type		LED			
Switching status indication		Optical			
Electrical					
Operating voltage range	[V DC]	15 ... 30			
Switching output		PNP	NPN	PNP	NPN
Switching element function		N/O contact			
Switching function		Threshold value comparator			
Reverse polarity protection		For all electrical connections			

Vacuum switch control panel

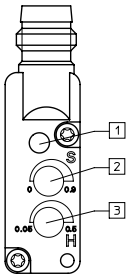

[1] Switching status indication, yellow LED
[2] Potentiometer for setting threshold values
[3] Potentiometer for setting hysteresis

Data sheet

Weight [g]												
Type	VADM						VADMI					
	-45	-70	-95	-140	-200	-300	-45	-70	-95	-140	-200	-300
Without vacuum switch	60	140	210	290	320	340	85	170	240	320	350	370
With vacuum switch -P/-N	65	145	220	300	330	350	90	180	250	330	360	380

Materials	
Housing	Wrought aluminium alloy
Filter housing	PC
Silencer	PE, POM
Piston	POM
Jet nozzle	Nickel-plated brass
Female nozzle	Nickel-plated brass
Filters	PA
Seals	NBR
Note on materials	Free of copper and PTFE

Vacuum Δp_u as a function of operating pressure p

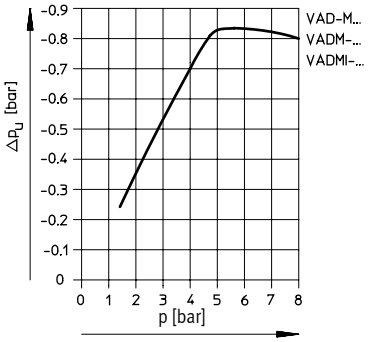

Evacuation time t [s] for 1 litre volume at 6 bar operating pressure

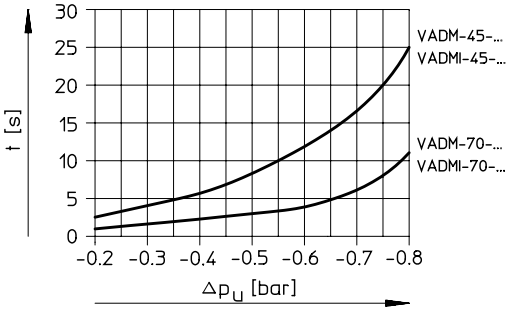

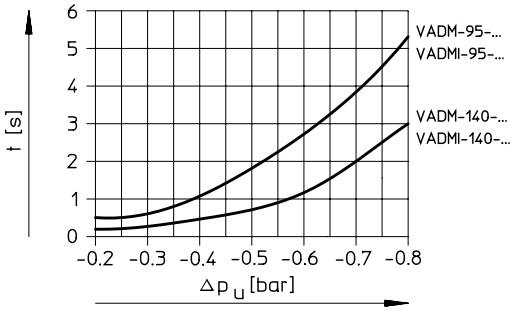

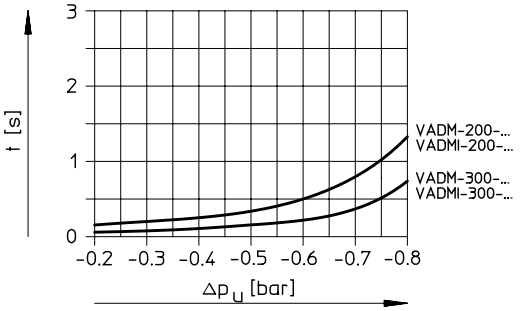

Data sheet

Air consumption Q as a function of operating pressure p

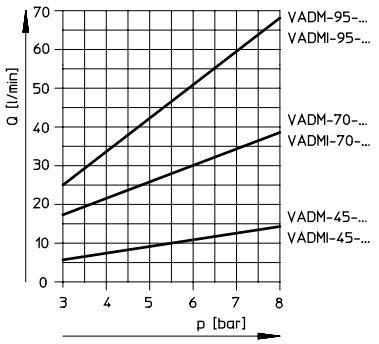

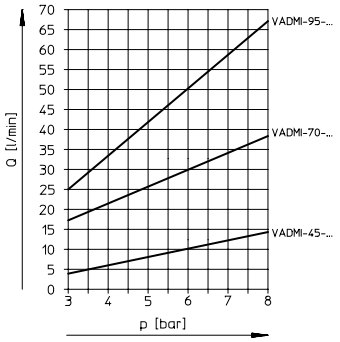

Noise level Lp as a function of operating pressure p (without suction flow)

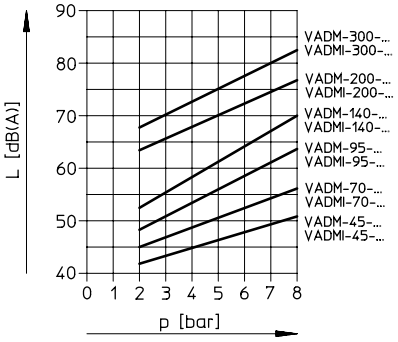

Efficiency η as a function of vacuum Δp_u at P_{nom} of 6 bar

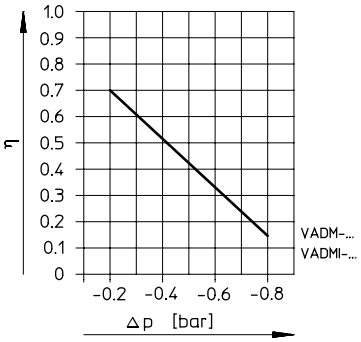

Suction rate qn as a function of vacuum Δp_u at P_{nom} of 6 bar

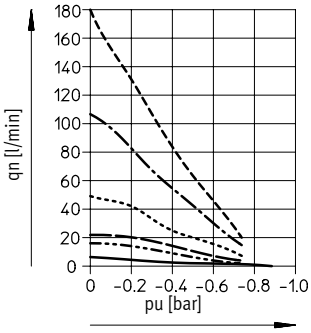

VADM-45/VADMI-45
VADM-70/VADMI-70
VADM-95/VADMI-95
VADM-140/VADMI-140
VADM-200/VADMI-200
VADM-300/VADMI-300

Data sheet

Dimensions

VADM-45/70

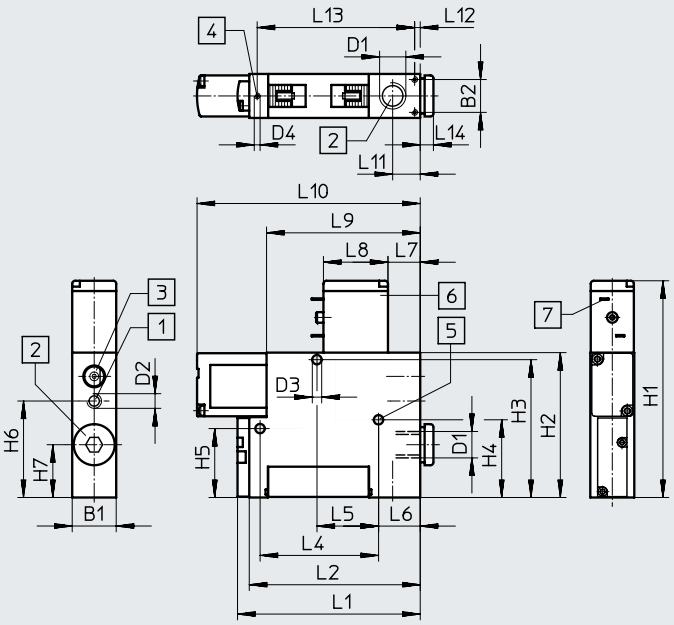

VADM-95/140/200/300

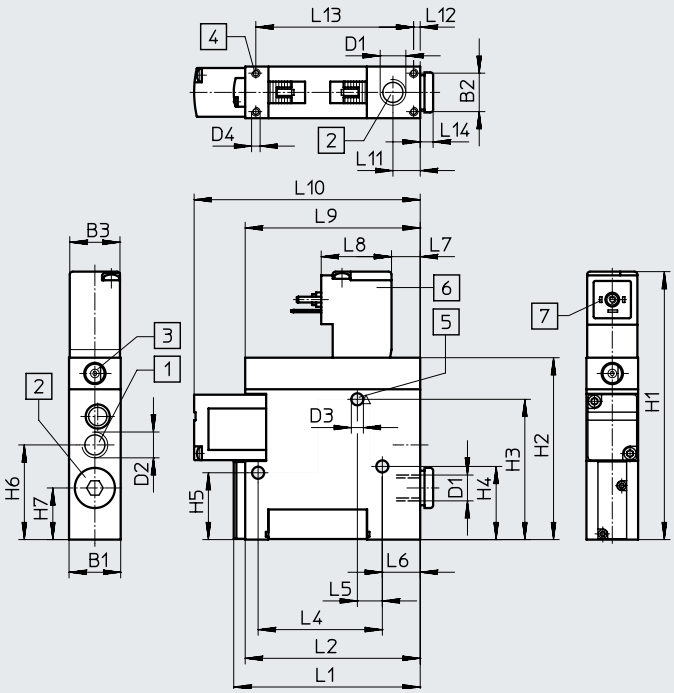

[1] Supply port
[2] Vacuum port
[3] Manual override
[4] Mounting thread
[5] Mounting hole
[6] Solenoid coil can be rotated by180°
[7] Suitable plug-socket for
– VADM-45/70:
– KMYZ ➔ page 19
– MSSD-ZBZC ➔ page 19
– VADM-95/140/200/300:
– KMEB ➔ page 19
– MSSD-EB ➔ page 19

Type	B1	B2	B3	D1	D2	D3 ø	D4	H1	H2	H3	H4	H5	H6	H7
VADM-45	10	6.2	–	M5	M5	3.2	M2	64.4	44.4	40.8	23.8	23.8	29.6	18
VADM-70	15	11.2	–	G1/8	M5	3.2	M2	73.9	49.4	47	26.5	23.5	32.9	18
VADM-95	18	13.4	18	G1/8	G1/8	4.2	M2.5	93.4	63.4	48.9	25.5	23.3	33	18
VADM-140	22	16.6	18	G1/4	G1/8	5.2	M3	107.4	77.4	61.4	41.4	41.4	36	17.5
VADM-200	22	16.6	18	G3/8	G1/4	5.2	M3	113.4	83.4	67.7	41.4	41.4	40	19
VADM-300	22	16.6	18	G3/8	G1/4	5.2	M3	113.4	83.4	67.7	41.4	41.4	40	19

Type	L1	L2	L4	L5	L6	L7	L8	L9	L10	L11	L12	L13	L14
VADM-45	45	41	33.6	25	3.6	11	16	41	56	7.9	1.9	36.3	4
VADM-70	62.3	58.3	40.4	21	14.2	11	22	52.4	76.1	9.4	1.9	53.7	4.5
VADM-95	65	61	43.3	8.7	13.2	9.7	24.5	61	78.8	9.5	2.3	55	4.5
VADM-140	88	84	26	12.5	28.5	9.7	24.5	61	96.8	13.8	2.3	79.4	5
VADM-200	88	84	26	12.5	28.5	9.7	24.5	61	101.8	12.5	2.3	79.4	5
VADM-300	124.4	120.4	26	12.5	28.5	9.7	24.5	61	137.4	12.5	2.3	115.8	5

Note: This product conforms to ISO 1179-1 and ISO 228-1.

Data sheet

Dimensions

VADM-45/70-P/N

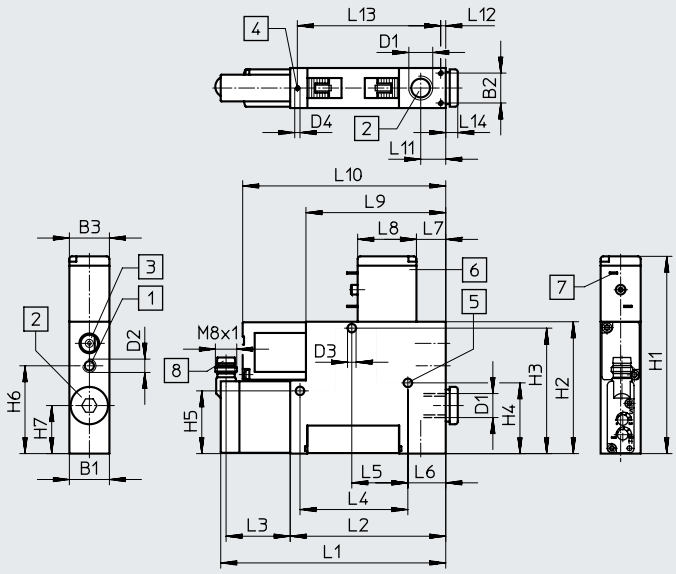

VADM-95/140/200/300-P/N

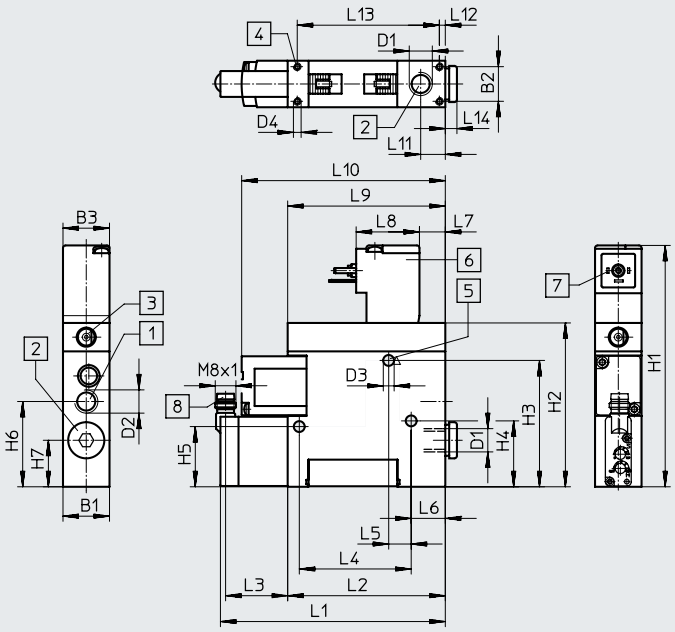

[1] Supply port
[2] Vacuum port
[3] Manual override
[4] Mounting thread
[5] Mounting hole
[6] Solenoid coil can be rotated by180°

[7] Suitable plug-socket for
– VADM-45/70:
– KMYZ ➔ page 19
– MSSD-ZBZC ➔ page 19
– VADM-95/140/200/300:
– KMEB ➔ page 19
– MSSD-EB ➔ page 19

[8] Connection for connecting cable NEBU-M8G4/M8W4 ➔ page 19

Type	B1	B2	B3	D1	D2	D3 ø	D4	H1	H2	H3	H4	H5	H6	H7
VADM-45-P/N	10	6.2	10	M5	M5	3.2	M2	64.4	44.4	40.8	23.8	23.8	29.6	18
VADM-70-P/N	15	11.2	15	G1/8	M5	3.2	M2	73.9	49.4	47	26.5	23.5	32.9	18
VADM-95-P/N	18	13.4	18	G1/8	G1/8	4.2	M2.5	93.4	63.4	48.9	25.5	23.3	33	18
VADM-140-P/N	22	16.6	18	G1/4	G1/8	5.2	M3	107.4	77.4	61.4	41.4	41.4	36	17.5
VADM-200-P/N	22	16.6	18	G3/8	G1/4	5.2	M3	113.4	83.4	67.7	41.4	41.4	40	19
VADM-300-P/N	22	16.6	18	G3/8	G1/4	5.2	M3	113.4	83.4	67.7	41.4	41.4	40	19

Type	L1	L2	L3	L4	L5	L6	L7	L8	L9	L10	L11	L12	L13	L14
VADM-45-P/N	71.4	41	28.4	33.6	25	3.6	11	16	41	56	7.9	1.9	36.3	4
VADM-70-P/N	88.7	58.3	28.4	40.4	21	14.2	11	22	52.4	76.1	9.4	1.9	53.7	4.5
VADM-95-P/N	91.4	61	28.4	43.3	8.7	13.2	9.7	24.5	61	78.8	9.5	2.3	55	4.5
VADM-140-P/N	114.4	84	28.4	26	12.5	28.5	9.7	24.5	61	96.8	13.8	2.3	79.4	5
VADM-200-P/N	114.4	84	28.4	26	12.5	28.5	9.7	24.5	61	101.8	12.5	2.3	79.4	5
VADM-300-P/N	150.8	120.4	28.4	26	12.5	28.5	9.7	24.5	61	137.4	12.5	2.3	115.8	5

Note: This product conforms to ISO 1179-1 and ISO 228-1.

Data sheet

Dimensions

VADMI-45/70

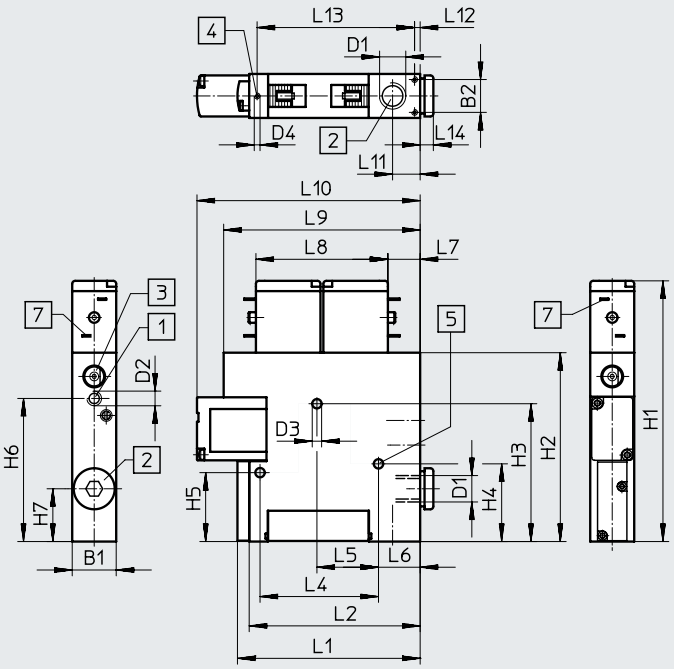

VADMI-95/140/200/300

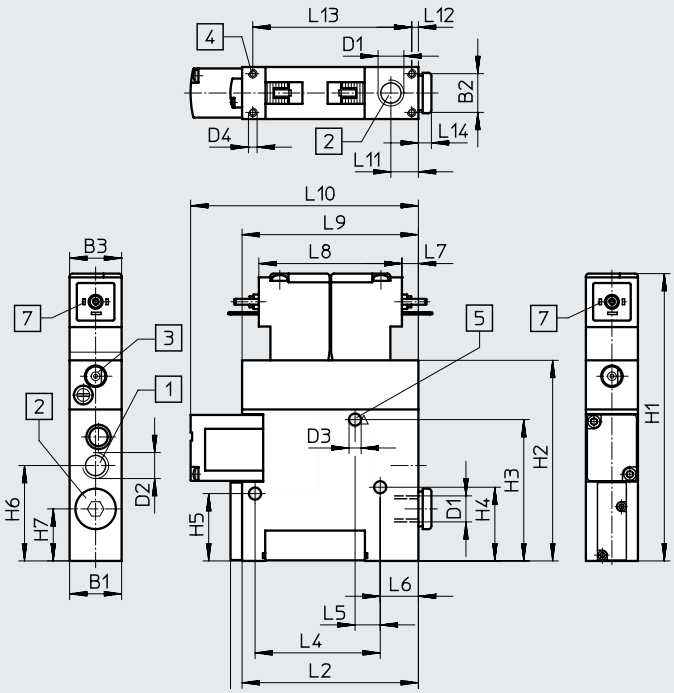

[1] Supply port
[2] Vacuum port
[3] Manual override
[4] Mounting thread
[5] Mounting hole

[7] Suitable plug-socket for
- VADMI-45/70:
- KMYZ ➔ page 19
- MSSD-ZBZC ➔ page 19
- VADMI-95/140/200/300:
- KMEB ➔ page 19
- MSSD-EB ➔ page 19

Type	B1	B2	B3	D1	D2	D3 ø	D4	H1	H2	H3	H4	H5	H6	H7
VADMI-45	10	6.2	–	M5	M5	3.2	M2	78.2	58.2	40.8	23.8	23.8	43.4	18
VADMI-70	15	11.2	–	G1/8	M5	3.2	M2	88.9	64.4	47	26.5	23.5	48.8	18
VADMI-95	18	13.4	18	G1/8	G1/8	4.2	M2.5	99.4	69.4	48.9	25.5	23.3	33	18
VADMI-140	22	16.6	18	G1/4	G1/8	5.2	M3	113.4	83.4	61.4	41.4	41.4	36	17.5
VADMI-200	22	16.6	18	G3/8	G1/4	5.2	M3	119.4	89.4	67.7	41.4	41.4	40	19
VADMI-300	22	16.6	18	G3/8	G1/4	5.2	M3	119.4	89.4	67.7	41.4	41.4	40	19

Type	L1	L2	L4	L5	L6	L7	L8	L9	L10	L11	L12	L13	L14
VADMI-45	45	41	33.6	25	3.6	11	33	55	56	7.9	1.9	36.3	4
VADMI-70	62.3	58.3	40.4	21	14.2	11	45	67	76.1	9.4	1.9	53.7	4.5
VADMI-95	65	61	43.3	8.7	13.2	5.7	49.5	61	78.8	9.5	2.3	55	4.5
VADMI-140	88	84	26	12.5	28.5	5.7	49.5	61	96.8	13.8	2.3	79.4	5
VADMI-200	88	84	26	12.5	28.5	5.7	49.5	61	101.8	12.5	2.3	79.4	5
VADMI-300	124.4	120.4	26	12.5	28.5	5.7	49.5	61	137.4	12.5	2.3	115.8	5

Note: This product conforms to ISO 1179-1 and ISO 228-1.

Data sheet

Dimensions

VADMI-45/70(-LS)-P/N

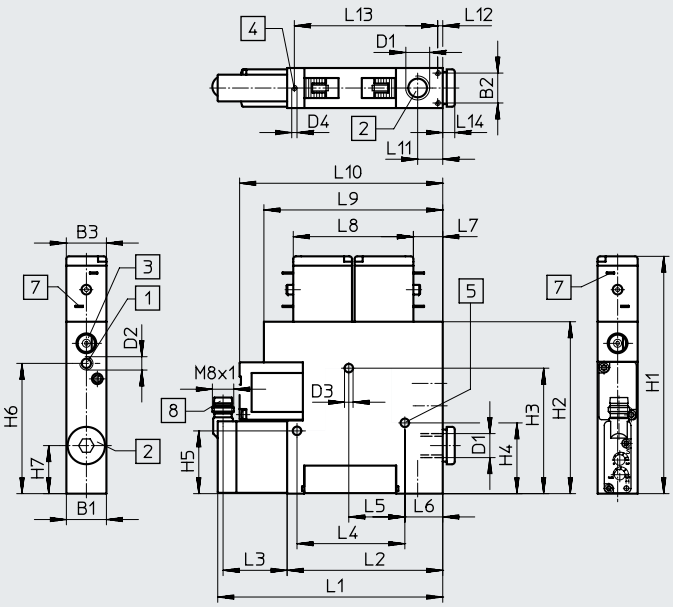

VADMI-95/140/200/300(-LS)-P/N

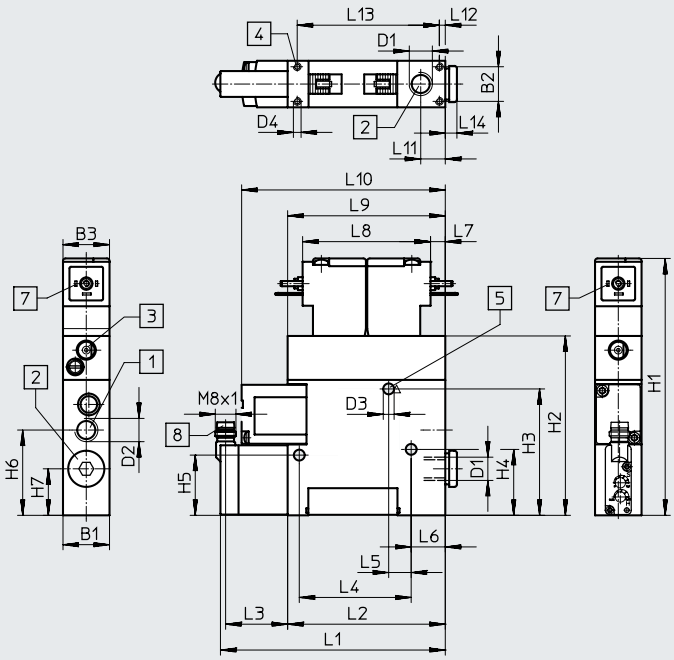

[1] Supply port
[2] Vacuum port
[3] Manual override
[4] Mounting thread
[5] Mounting hole

[7] Suitable plug-socket for
- VADMI-45/70:
- KMYZ ➔ page 19
- MSSD-ZBZC ➔ page 19
- VADMI-95/140/200/300:
- KMEB ➔
- MSSD-EB ➔ page 19

[8] Connection for connecting cable NEBU-M8G4/M8W4 ➔ page 19

Type	B1	B2	B3	D1	D2	D3 ø	D4	H1	H2	H3	H4	H5	H6	H7
VADMI-45(-LS)-P/N	10	6.2	10	M5	M5	3.2	M2	78.2	58.2	40.8	23.8	23.8	43.4	18
VADMI-70(-LS)-P/N	15	11.2	15	G1/8	M5	3.2	M2	88.9	64.4	47	26.5	23.5	48.8	18
VADMI-95(-LS)-P/N	18	13.4	18	G1/8	G1/8	4.2	M2.5	99.4	69.4	48.9	25.5	23.3	33	18
VADMI-140(-LS)-P/N	22	16.6	18	G1/4	G1/8	5.2	M3	113.4	83.4	61.4	41.4	41.4	36	17.5
VADMI-200(-LS)-P/N	22	16.6	18	G3/8	G1/4	5.2	M3	119.4	89.4	67.7	41.4	41.4	40	19
VADMI-300(-LS)-P/N	22	16.6	18	G3/8	G1/4	5.2	M3	119.4	89.4	67.7	41.4	41.4	40	19

Type	L1	L2	L3	L4	L5	L6	L7	L8	L9	L10	L11	L12	L13	L14
VADMI-45(-LS)-P/N	71.4	41	28.4	33.6	25	3.6	11	33	55	56	7.9	1.9	36.3	4
VADMI-70(-LS)-P/N	88.7	58.3	28.4	40.4	21	14.2	11	45	67	76.1	9.4	1.9	53.7	4.5
VADMI-95(-LS)-P/N	91.4	61	28.4	43.3	8.7	13.2	5.7	49.5	61	78.8	9.5	2.3	55	4.5
VADMI-140(-LS)-P/N	114.4	84	28.4	26	12.5	28.5	5.7	49.5	61	96.8	13.8	2.3	79.4	5
VADMI-200(-LS)-P/N	114.4	84	28.4	26	12.5	28.5	5.7	49.5	61	101.8	12.5	2.3	79.4	5
VADMI-300(-LS)-P/N	150.8	120.4	28.4	26	12.5	28.5	5.7	49.5	61	137.4	12.5	2.3	115.8	5

Note: This product conforms to ISO 1179-1 and ISO 228-1.

Data sheet

Ordering data								
Size	Solenoid coils	Without vacuum switch		With vacuum switch				
				PNP output		NPN output		
		Part no.	Type	Part no.	Type	Part no.	Type	
Without ejector pulse								
45	MZB	**162500**	**VADM-45**	**162512**	**VADM-45-P**	**162513**	**VADM-45-N**	
70	MYB	**162501**	**VADM-70**	**162514**	**VADM-70-P**	**162515**	**VADM-70-N**	
95	MEB	**162502**	**VADM-95**	**162516**	**VADM-95-P**	**162517**	**VADM-95-N**	
140	MEB	**162503**	**VADM-140**	**162518**	**VADM-140-P**	**162519**	**VADM-140-N**	
200	MEB	**162504**	**VADM-200**	**162520**	**VADM-200-P**	**162521**	**VADM-200-N**	
300	MEB	**162505**	**VADM-300**	**162522**	**VADM-300-P**	**162523**	**VADM-300-N**	
With ejector pulse								
45	MZB	**162506**	**VADMI-45**	**162524**	**VADMI-45-P**	**162525**	**VADMI-45-N**	
70	MYB	**162507**	**VADMI-70**	**162526**	**VADMI-70-P**	**162527**	**VADMI-70-N**	
95	MEB	**162508**	**VADMI-95**	**162528**	**VADMI-95-P**	**162529**	**VADMI-95-N**	
140	MEB	**162509**	**VADMI-140**	**162530**	**VADMI-140-P**	**162531**	**VADMI-140-N**	
200	MEB	**162510**	**VADMI-200**	**162532**	**VADMI-200-P**	**162533**	**VADMI-200-N**	
300	MEB	**162511**	**VADMI-300**	**162534**	**VADMI-300-P**	**162535**	**VADMI-300-N**	
With ejector pulse and air saving function								
45	MZB	–		**171053**	**VADMI-45-LS-P**	**171054**	**VADMI-45-LS-N**	
70	MYB	–		**171055**	**VADMI-70-LS-P**	**171056**	**VADMI-70-LS-N**	
95	MEB	–		**171057**	**VADMI-95-LS-P**	**171058**	**VADMI-95-LS-N**	
140	MEB	–		**171059**	**VADMI-140-LS-P**	**171060**	**VADMI-140-LS-N**	
200	MEB	–		**171061**	**VADMI-200-LS-P**	**171062**	**VADMI-200-LS-N**	
300	MEB	–		**171063**	**VADMI-300-LS-P**	**171064**	**VADMI-300-LS-N**	

Note

For vacuum generators VADMI-...-LS-P/N, the cable kit with plug sockets for solenoid coils and vacuum switches is included in the scope of delivery.

These vacuum generators may only be operated with the cable supplied.

Accessories

Ordering data – Plug socket MSSD

Data sheets ➔ Internet: mssd

	Description	Electrical connection	Cable connection	Part no.	Type
	For VADM/ VADMI-45/70	Angled socket	Insulation displacement connector	**185521**	**MSSD-ZBZC**
	For VADM/ VADMI-95/ 140/200/300	Angled socket, 3-pin, type C, to EN 175301-803	Screw terminal PG7	**151687**	**MSSD-EB**
			Screw terminal M12	**539712**	**MSSD-EB-M12**
		Angled socket, 4-pin, type C	Insulation displacement connector M14	**192745**	**MSSD-EB-S-M14**

Ordering data – Connecting cable KMYZ-2

Data sheets ➔ Internet: kmyz

	Description	Electrical connection		Switching status indication	Cable length [m]	Part no.	Type
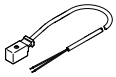	For VADM/ VADMI-45/70	Angled socket, 2-pin, square design	Open cable end	LED	2.5	**34997**	**KMYZ-2-24-2.5-LED**
					5	**34998**	**KMYZ-2-24-5-LED**
				LED	10	**193443**	**KMYZ-2-24-10-LED**
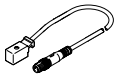			Straight plug, 3-pin, M8x1	LED	0.5	**177676**	**KMYZ-2-24-M8-0.5-LED**
					2.5	**177678**	**KMYZ-2-24-M8-2.5-LED**

Ordering data – Plug socket with cable KMEB

Data sheets ➔ Internet: kmeb

	Description	Electrical connection		Switching status indication	Cable length [m]	Part no.	Type
	For VADM/ VADMI-95/ 140/200/300	Angled socket, 3-pin, type C, to EN 175301-803	Open cable end	LED	2.5	**151688**	**KMEB-1-24-2.5-LED**
					5	**151689**	**KMEB-1-24-5-LED**
					10	**193457**	**KMEB-1-24-10-LED**
		Angled socket, 4-pin, type C, to EN 175301-803	Open cable end	LED	2.5	**174844**	**KMEB-2-24-2.5-LED**
					5	**174845**	**KMEB-2-24-5-LED**
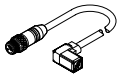		Angled socket, 5-pin, type C, to EN 175301-803	Straight plug, 5-pin, M12x1	LED	0.5	**177677**	**KMEB-2-24-M12-0.5-LED**

Ordering data – Illuminating seal MEB-LD

Data sheets ➔ Internet: meb

	Description	Part no.	Type
	For plug socket with cable KMEB and plug socket MSSD-EB	**151717**	**MEB-LD-12-24DC**

Ordering data – Connecting cable NEBU-M8

Data sheets ➔ Internet: nebu

	Electrical connection		Cable length [m]	Part no.	Type
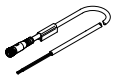	Straight socket, M8x1, 4-pin	Open cable end	2.5	**541342**	**NEBU-M8G4-K-2.5-LE4**
			5	**541343**	**NEBU-M8G4-K-5-LE4**
			9	**8003130**	**NEBU-M8G4-K-9-LE4**
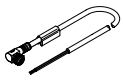	Angled socket, M8x1, 4-pin	Open cable end	2.5	**541344**	**NEBU-M8W4-K-2.5-LE4**
			5	**541345**	**NEBU-M8W4-K-5-LE4**
			10	**575833**	**NEBU-M8W4-K-10-LE4**