Mini slides SLS/SLF

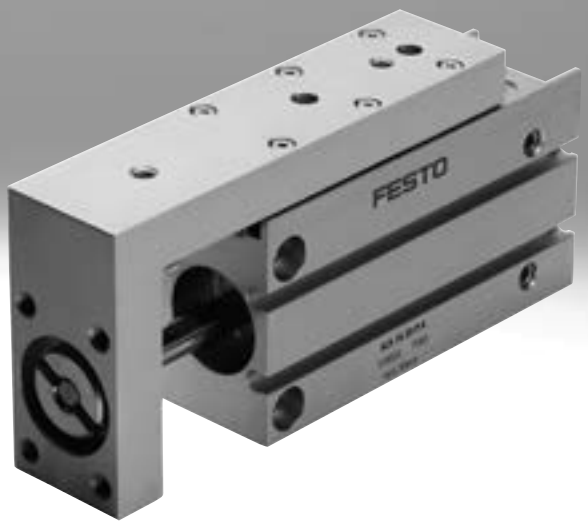

Key features

General

- Double-acting drives
- Precise and rigid guide
- Versatile air connections
- Sensors can be integrated
- Highly flexible thanks to versatile assembly and mounting options on:
  - Drive body
  - Slide
  - Yoke plate

Mini slide SLS

- Slim design
- Integrated end-position cushioning:
  - Elastic cushioning components

Mini slide SLF

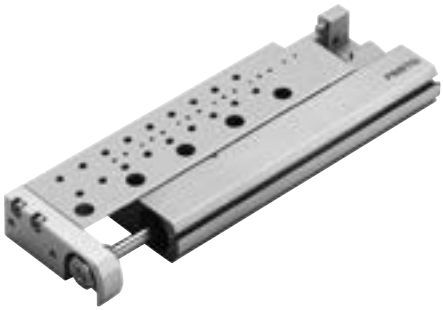

- Flat design
- Adjustable end-position cushioning
  - Elastic cushioning components
- Versatile combination options on:
  - Drives
- System product for handling and assembly technology

The slim mini slide

SLS

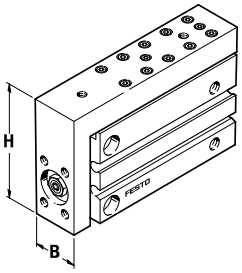

Piston diameter		**Width (W)**	x	Height (H)
6 mm	**16**	x	39 mm	
10 mm	**20**	x	45 mm	
16 mm	**24**	x	51 mm	

The flat mini slide

SLF

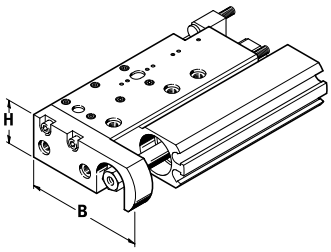

Piston diameter		Width (W)	x	**Height (H)**
6 mm	46	x	**11 mm**	
10 mm	48	x	**15 mm**	
16 mm	62	x	**21 mm**	

Key features

Versatile

Mini slide SLS

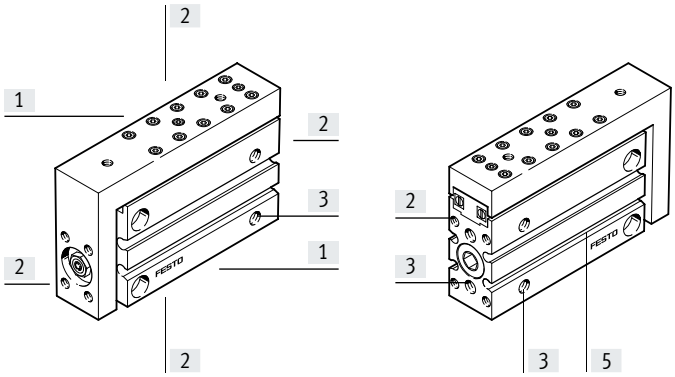

Mini slide SLF

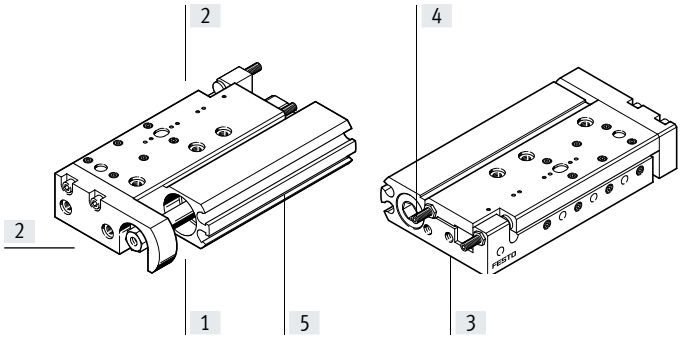

[1] Mounting surface:
The drive can be directly attached via through-holes or threaded holes (with appropriate screws).

[2] Mounting surface:
Devices and loads can be directly attached via threaded holes in the slide and the yoke plate (with appropriate screws).

[3] Versatile air connections

[4] Adjustable end-position cushioning systems on SLF-...-P-A
with elastic cushioning components in the end positions

[5] Sensors can be integrated
Sensor slots for one or more proximity switches SME/SMT-10.
For space-saving, reliable sensing of piston positions. Proximity switches can be freely moved and clamped in the sensor slots provided.

Type codes

001	Series	
SLS	Mini slide, double-acting	

002	Size	
6	6	
10	10	
16	16	

003	Stroke	
5	5	
10	10	
15	15	
20	20	
25	25	
30	30	

004	Cushioning	
P	Elastic cushioning rings/plates on both sides	

005	Position sensing	
A	For proximity sensor	

Peripherals overview

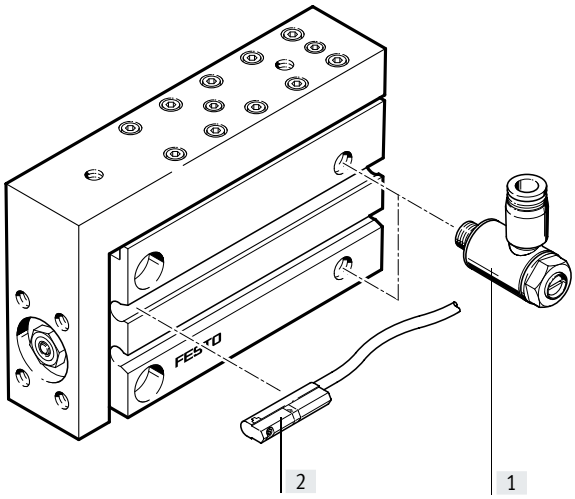

Accessories		Description	➔ Page/Internet
[1]	One-way flow control valve GRLA	For speed regulation	22
	Push-in fitting QS	For connecting compressed air tubing with standard outside diameters	qs
[2]	Proximity switch SME/SMT-10	Sensor slots for one or several proximity switches	22

Data sheet

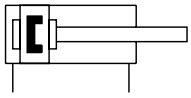

www.festo.com

Diameter
6 ... 16 mm

Stroke length
5 ... 30 mm

General technical data Piston diameter		6	10	16
Pneumatic connection		M5		
Design		Piston, piston rod, slide, yoke, ball bearing cage guide		
Guide		Ball bearing-guided		
Cushioning		Non-adjustable at both ends		
Position sensing		For proximity switch		
Type of mounting		With through-hole		
		With female thread		
Mounting position		Any		
Max. advancing speed	[m/s]	0.5[1]	0.8	
Max. retracting speed	[m/s]	0.5[1]	0.8	

1) Must be throttled externally.

Operating and environmental conditions Piston diameter		6	10	16
Operating medium		Compressed air to ISO 8573-1:2010 [7:4:4]		
Note on the operating/pilot medium		Lubricated operation possible (in which case lubricated operation will always be required)		
Operating pressure	[bar]	1.5 ... 10	1 ... 10	
Ambient temperature[1]	[°C]	–20 ... +60		

1) Note operating range of proximity switches.

Forces [N] and impact energy [Nm] Piston diameter	6	10	16
Theoretical force at 6 bar, advancing	17	47	121
Theoretical force at 6 bar, retracting	13	39	104
Max. impact energy at the end positions[1] Cushioning P[2]	0.008	0.05	0.15

1) Loads moved by the slides must be taken into consideration when calculating the end-position cushioning energy.
2) Note also the graph illustrating piston speed as a function of payload → page 8

Data sheet

Weights [g]				
Piston diameter	Stroke	6	10	16
Product weight	5	97	130	225
	10	104	139	226
	15	113	149	256
	20	120	164	257
	25	131	182	291
	30	141	191	301
Moving mass	5	28	41	92
	10	28	44	92
	15	32	49	100
	20	33	51	101
	25	37	60	111
	30	38	62	115

Materials

Sectional view

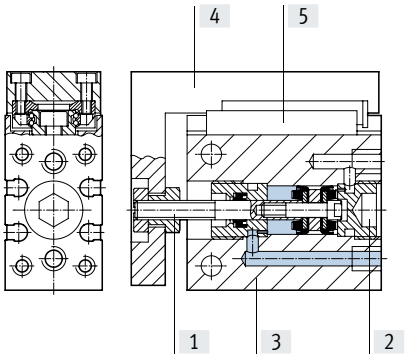

Mini slide		
[1]	Piston rod	High-alloy steel
[2]	Cover	Anodised wrought aluminium alloy
[3]	Housing	Anodised wrought aluminium alloy
[4]	Slide	Anodised wrought aluminium alloy
[5]	Guide	Tempered steel
–	Seals	Thermoplastic rubber, hydrogenated nitrile rubber, nitrile rubber
	Note on materials	Free of copper and PTFE

Data sheet

Piston speed v as a function of payload m

SLS-6/-10/-16-...-P-A

The piston speed as a function of payload illustrated in this graph must not be exceeded as the kinetic impact or residual energy in the end positions can result in damage to the drive.

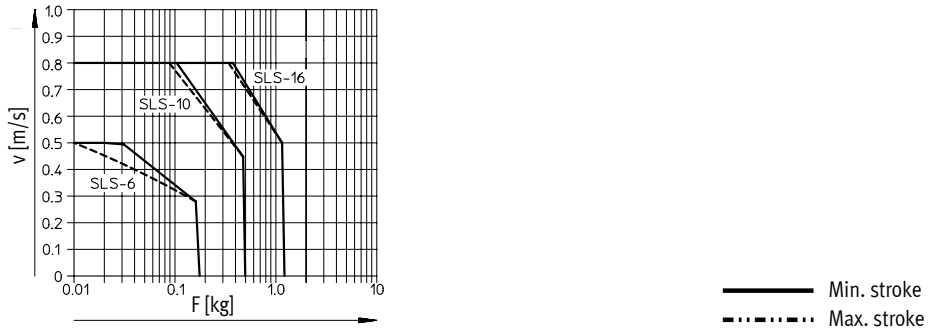

Dynamic characteristic load values

The indicated torques refer to the centre of the guide.
These values must not be exceeded during dynamic operation. Special attention must be paid to the deceleration phase.

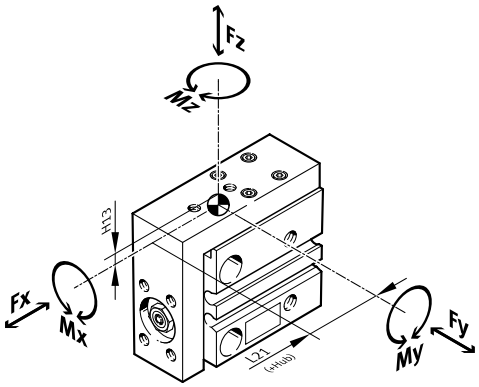

If the drive is simultaneously subjected to several of the forces and torques indicated below, the following equation must be satisfied in addition to the indicated maximum loads:

$$f_v = \frac{|F_{y1}|}{F_{y2}} + \frac{|F_{z1}|}{F_{z2}} + \frac{|M_{x1}|}{M_{x2}} + \frac{|M_{y1}|}{M_{y2}} + \frac{|M_{z1}|}{M_{z2}} \leq 1$$

Position of the guide centre

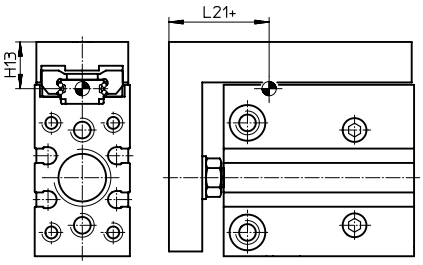

\+ plus stroke length

Data sheet

Permissible forces and torques						Geometric characteristics	
Piston diameter	Stroke	Fy_{max} [N]	Fz_{max} [N]	Mx_{max}, My_{max} [Nm]	Mz_{max} [Nm]	H13 [mm]	L21 [mm]
6							
	5	220	220	0.6	0.5	8.5	20.5
	10	170	170	0.6	0.5		20.5
	15	180	180	0.9	0.6		23
	20	160	160	0.9	0.6		23
	25	150	150	0.9	0.6		23
	30	140	140	0.9	0.6		23
10							
	5	220	220	0.6	0.5	10	27.5
	10	170	170	0.6	0.5		27.5
	15	170	170	1.1	0.7		36
	20	150	150	1.1	0.7		36
	25	140	140	1.1	0.7		36
	30	130	130	1.1	0.7		36
16							
	5	590	590	2.1	1.6	11	30.5
	10	470	470	2.1	1.6		30.5
	15	410	410	1.7	1.3		30.5
	20	370	370	1.7	1.3		30.5
	25	410	410	2.5	1.4		34
	30	390	390	2.5	1.4		34

Calculation example

Given:

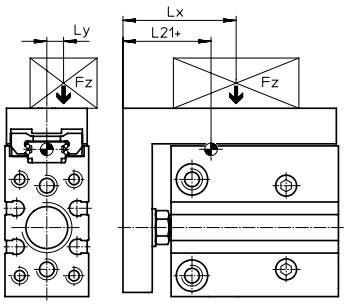

Mini slide = SLS-10
Stroke length = 20 mm
Lever arm L_x = 5 mm
Lever arm L_y = 20 mm
Mass Fz = 0.495 kg
Acceleration a = 0 m/s^2

To be calculated:

F_y, F_z, Mx, My, Mz and verification of operation with combined load

Solution:

L21 = 36 mm from table

F_y = 0 N

F_z = m x g
= 0.495 kg x 9.81 m/s^2 = 4.856 N

M_x = m x g x L_y
= 0.495 kg x 9.81 m/s^2 x 20 mm = 0.097 Nm

M_y = m x g x [(L21+Hub)-L_x]
= 0.495 kg x 9.81 m/s^2 [(36 mm + 20 mm) – 5 mm] = 0.248 Nm

M_z = 0 Nm

Combined load:

$$f_v = \frac{|F_{y1}|}{F_{y2}} + \frac{|F_{z1}|}{F_{z2}} + \frac{|M_{x1}|}{M_{x2}} + \frac{|M_{y1}|}{M_{y2}} + \frac{|M_{z1}|}{M_{z2}} \leq 1$$

$$= 0 + \frac{4{,}856\ N}{150\ N} + \frac{0{,}097\ Nm}{1{,}1\ Nm} + \frac{0{,}248\ Nm}{1{,}1\ Nm} + 0 = 0{,}345\ \leq 1$$

Data sheet

Dimensions Download CAD data ➔ www.festo.com

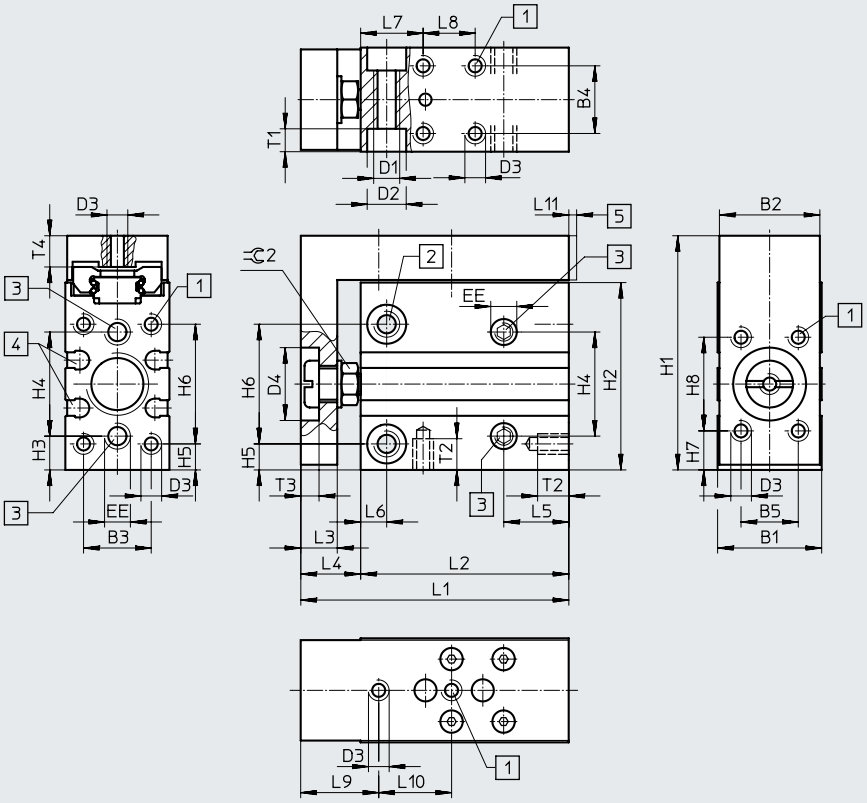

[1] Mounting thread
[2] Through-holes and threaded holes for mounting the drive
[3] Compressed air supply ports
[4] Sensor slot for proximity switch SME/SMT-10
[5] Possible protrusion of the slide in relation to the edge of the housing

⌀ [mm]	Stroke [mm]	B1 +0.4	B2	B3	B4	B5	D1	D2 ⌀	D3	D4 ⌀ H11	EE	H1
6	5	16	15.3	10.5	10	9	M4	6	M3	12	M5	39
	10											
	15											
	20											
	25											
	30											
10	5	20	19.3	13	13	11	M5	7.5	M4	14	M5	45
	10											
	15											
	20											
	25											
	30											
16	5	24	23.3	17	17	16	M5	7.5	M4	19.5	M5	51
	10											
	15											
	20											
	25											
	30											

Data sheet

ø [mm]	Stroke [mm]	H2	H3	H4	H5	H6	H7	H8	L1	L2	L3	L4	L5
6	5	31	6	17	5	19	7	15	46	37.5	6	8.5	10
	10								51	42.5			
	15								56	47.5			
	20								61	52.5			
	25								66	57.5			
	30								71	62.5			
10	5	36	6.5	20	5	23	7.5	18	51.5	40	7	11.5	12.5
	10								56.5	45			
	15								61.5	50			
	20								66.5	55			
	25								73.5	62			
	30								78.5	67			
16	5	41	6.5	25	5.5	27	6	26	66	52	10	14	12.5
	10												
	15								76	62			
	20												
	25								86	72			
	30								91	77			

ø [mm]	Stroke [mm]	L6	L7	L8	L9	L10	L11	T1	T2	T3	T4	⊂ 2
6	5	4	10	10	13	20	–	3.3	4.8	3	5	7
	10			15								
	15			20		25						
	20			25		30						
	25			30		40						
	30			35								
10	5	5	12	10	15	14	Max. 0.75	4.4	6	3.5	6	8
	10			14		19						
	15			18		25						
	20			24		30						
	25			32		40						
	30			35		45						
16	5	5	12	20	18	24	Max. 0.75	4.4	6	5	6	13
	10			20		35						
	15			30		45						
	20					50						
	25			40								
	30			45		55						

Data sheet

Ordering data ø [mm]	Stroke [mm]	Part no.	Type
6			
	5	**170485**	**SLS-6-5-P-A**
	10	**170486**	**SLS-6-10-P-A**
	15	**170487**	**SLS-6-15-P-A**
	20	**170488**	**SLS-6-20-P-A**
	25	**170489**	**SLS-6-25-P-A**
	30	**170490**	**SLS-6-30-P-A**
10			
	5	**170491**	**SLS-10-5-P-A**
	10	**170492**	**SLS-10-10-P-A**
	15	**170493**	**SLS-10-15-P-A**
	20	**170494**	**SLS-10-20-P-A**
	25	**170495**	**SLS-10-25-P-A**
	30	**170496**	**SLS-10-30-P-A**
16			
	5	**170497**	**SLS-16-5-P-A**
	10	**170498**	**SLS-16-10-P-A**
	15	**170499**	**SLS-16-15-P-A**
	20	**170500**	**SLS-16-20-P-A**
	25	**170501**	**SLS-16-25-P-A**
	30	**170502**	**SLS-16-30-P-A**

Peripherals overview

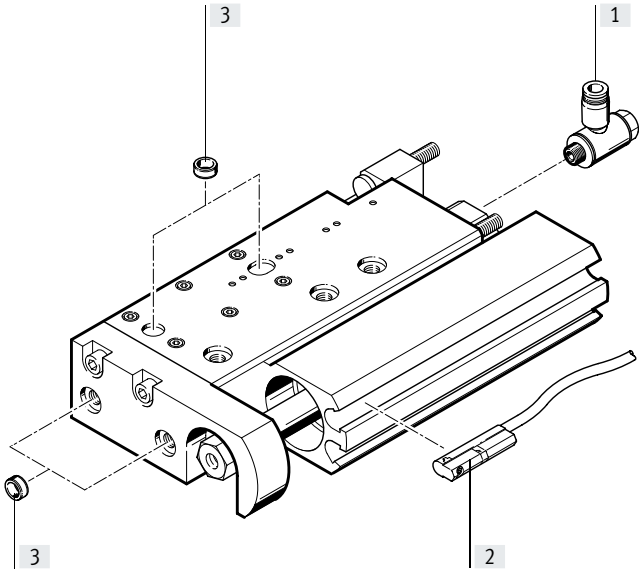

Note

End stops must not be removed.

Accessories

		Description	→ Page/Internet
[1]	One-way flow control valve GRLA	For speed regulation	22
	Push-in fitting QS	For connecting compressed air tubing with standard outside diameters	qs
[2]	Proximity switch SME/SMT-10	Sensor slots for one or several proximity switches	22
[3]	Centring pin/sleeve ZBS/ZBH	For centring loads and attachments	22

Type codes

001	Series	
SLF	Mini slide, double-acting	

002	Size	
6	6	
10	10	
16	16	

003	Stroke	
10	10	
20	20	
30	30	
40	40	
50	50	
80	80	

004	Cushioning	
P	Elastic cushioning rings/plates on both sides	

005	Position sensing	
A	For proximity sensor	

Data sheet

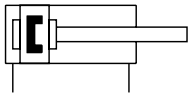

www.festo.com

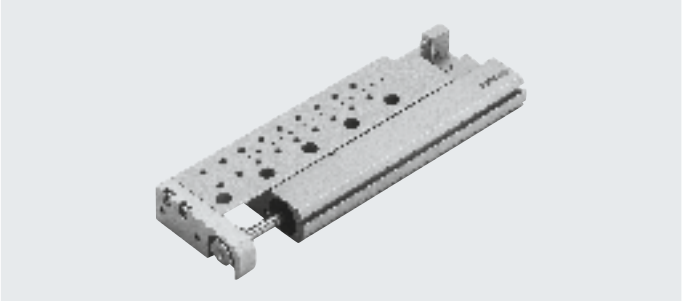

Diameter
6 ... 16 mm

Stroke length
10 ... 80 mm

General technical data Piston diameter		6	10	16
Pneumatic connection		M5		
Design		Piston, piston rod, slide, yoke, ball bearing cage guide		
Guide		Ball bearing-guided		
Cushioning		Non-adjustable at both ends		
Position sensing		For proximity switch		
Type of mounting		With through-hole		
		With female thread		
Mounting position		Any		
Adjustable end-position range	Per end stop [mm]	5		
Max. advancing speed	[m/s]	0.5[1)]	0.8	
Max. retracting speed	[m/s]	0.5[1)]	0.8	

1) Must be throttled externally.

Operating and environmental conditions Piston diameter		6	10	16
Operating medium		Compressed air to ISO 8573-1:2010 [7:4:4]		
Note on the operating/pilot medium		Lubricated operation possible (in which case lubricated operation will always be required)		
Operating pressure	[bar]	1.5 ... 10	1 ... 10	
Ambient temperature[1)]	[°C]	–20 ... +60		

1) Note operating range of proximity switches.

Forces [N] and impact energy [Nm] Piston diameter		6	10	16
Theoretical force at 6 bar, advancing		17	47	121
Theoretical force at 6 bar, retracting		13	40	104
Max. impact energy at the end positions[1)]	Cushioning P[2)]	0.016	0.05	0.1

1) Loads moved by the slides must be taken into consideration when calculating the end-position cushioning energy.
2) Note also the graph illustrating piston speed as a function of payload → page 16

Data sheet

Weights [g]				
Piston diameter	Stroke	6	10	16
Product weight	10	108	135	257
	20	124	156	291
	30	138	171	319
	40	–	178	353
	50		227	407
	80		–	539
Moving mass	10	32	41	99
	20	37	48	109
	30	48	58	122
	40	–	60	133
	50		79	153
	80		–	199

Materials

Sectional view

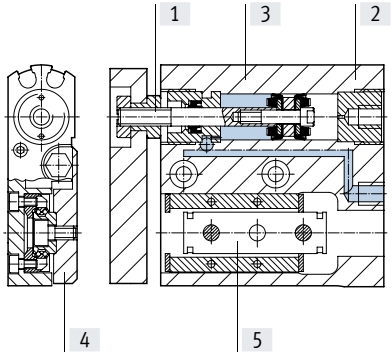

Mini slide		
[1]	Piston rod	High-alloy steel
[2]	Cover	Anodised wrought aluminium alloy
[3]	Housing	Anodised wrought aluminium alloy
[4]	Slide	Anodised wrought aluminium alloy
[5]	Guide	Tempered steel
–	Seals	Thermoplastic rubber, hydrogenated nitrile rubber, nitrile rubber
	Note on materials	Free of copper and PTFE

Data sheet

Piston speed v as a function of payload m

SLF-6/-10/-16-...-P-A

The piston speed as a function of payload illustrated in this graph must not be exceeded as the kinetic impact or residual energy in the end positions can result in damage to the drive.

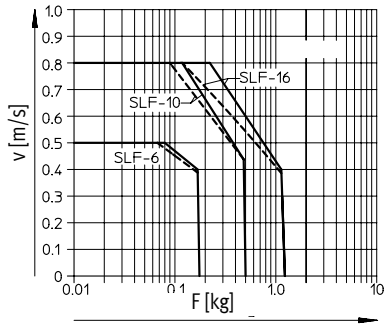

Min. stroke
Max. stroke

Characteristic load values

The indicated torques refer to the centre of the guide.
These values must not be exceeded during dynamic operation. Special attention must be paid to the deceleration phase.

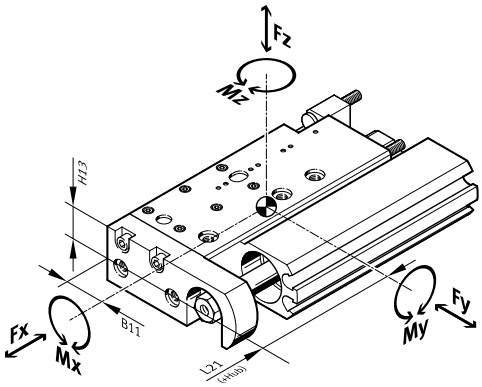

If the drive is simultaneously subjected to several of the forces and torques indicated below, the following equation must be satisfied in addition to the indicated maximum loads:

$$f_v = \frac{|F_{y1}|}{F_{y2}} + \frac{|F_{z1}|}{F_{z2}} + \frac{|M_{x1}|}{M_{x2}} + \frac{|M_{y1}|}{M_{y2}} + \frac{|M_{z1}|}{M_{z2}} \leq 1$$

Position of the guide centre

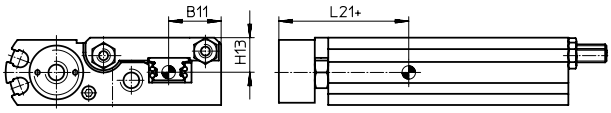

\+ plus stroke length

Data sheet

Permissible forces and torques						Geometric characteristics		
Piston diameter	Stroke	Fy_{max} [N]	Fz_{max} [N]	Mx_{max}, My_{max} [Nm]	Mz_{max} [Nm]	B11 [mm]	H13 [mm]	L21 [mm]
6								
	10	170	170	0.6	0.5	14	7	22
	20	150	150	1.1	0.7			21
	30	130	130	1.1	0.7			21
10								
	10	170	170	0.6	0.5	11.5	8	23
	20	150	150	1.1	0.7			25
	30	130	130	1.1	0.7			25
	40	150	150	0.9	0.5			29
	50	190	190	1.4	0.5			34.5
16								
	10	470	470	2.1	1.6	14	11.5	27.5
	20	370	370	1.7	1.3			27.5
	30	390	390	2.5	1.4			31.5
	40	350	350	2.2	1.3			31.5
	50	390	390	3.1	1.4			36
	80	410	410	4.3	1.5			43.5

Calculation example

Given:

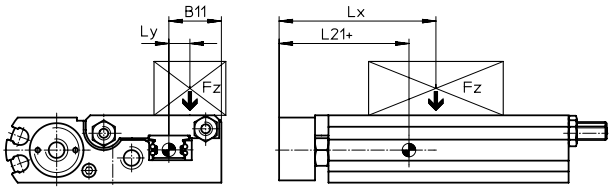

Mini slide = SLF-10
Stroke length = 20 mm
Lever arm L_x = 5 mm
Lever arm L_y = 20 mm
Mass F_z = 0.495 kg
Acceleration a = 0 m/s²

To be calculated:

F_y, F_z, Mx, My, Mz and verification of operation with combined load

Solution:

L21 = 25 mm from table

F_y = 0 N

F_z = m x g
= 0.495 kg x 9.81 m/s² = 4.856 N

M_x = m x g x L_y
= 0.495 kg x 9.81 m/s² x 20 mm = 0.097 Nm

M_y = m x g x [(L21+Hub)-L_x]
= 0.495 kg x 9.81 m/s² [(25 mm + 20 mm) – 5 mm] = 0.194 Nm

M_z = 0 Nm

Combined load:

$$f_v = \frac{|F_{y1}|}{F_{y2}} + \frac{|F_{z1}|}{F_{z2}} + \frac{|M_{x1}|}{M_{x2}} + \frac{|M_{y1}|}{M_{y2}} + \frac{|M_{z1}|}{M_{z2}} \leq 1$$

$$= 0 + \frac{4{,}856\ N}{150\ N} + \frac{0{,}097\ Nm}{1{,}1\ Nm} + \frac{0{,}194\ Nm}{1{,}1\ Nm} + 0 = 0{,}297\ \leq 1$$

Data sheet

Dimensions Download CAD data ➔ www.festo.com

ø 6

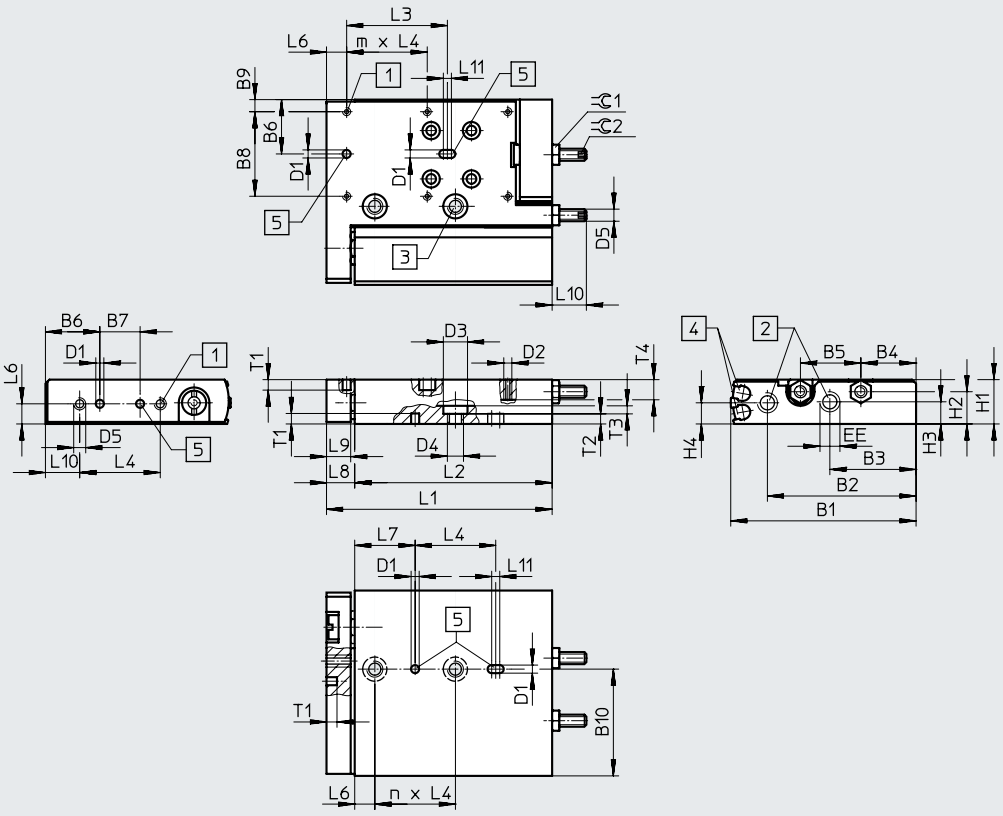

[1] Mounting thread
[2] Compressed air supply ports
[3] Through-holes for mounting the drive
[4] Sensor slot for proximity switch SME/SMT-10
[5] Centring holes (centring sleeves included in the scope of delivery)

ø [mm]	B1	B2	B3	B4	B5	B6	B7	B8	B9	B10	D1 ø H7
6	46	36.9	21.4	13.7	15	13.5	10	21	3	26.5	2

ø [mm]	D2	D3 ø	D4	D5	EE	H1	H2	H3	H4	L4	L6
6	M2	6	M4	M3	M5	11	8	5.5	5.25	20	5

ø [mm]	L7	L8	L9	L10	L11	T1	T2	T3	T4	C1	C2
6	15	7	6	8.5	2	2.6	2.5	2	5	5	1.5

ø [mm]	Stroke [mm]	L1	L2	L3	m	n
6	10	56	49	20	2	1
	20	66	59	20	2	2
	30	76	69	40	3	2

Data sheet

Dimensions Download CAD data ➔ www.festo.com

ø 10

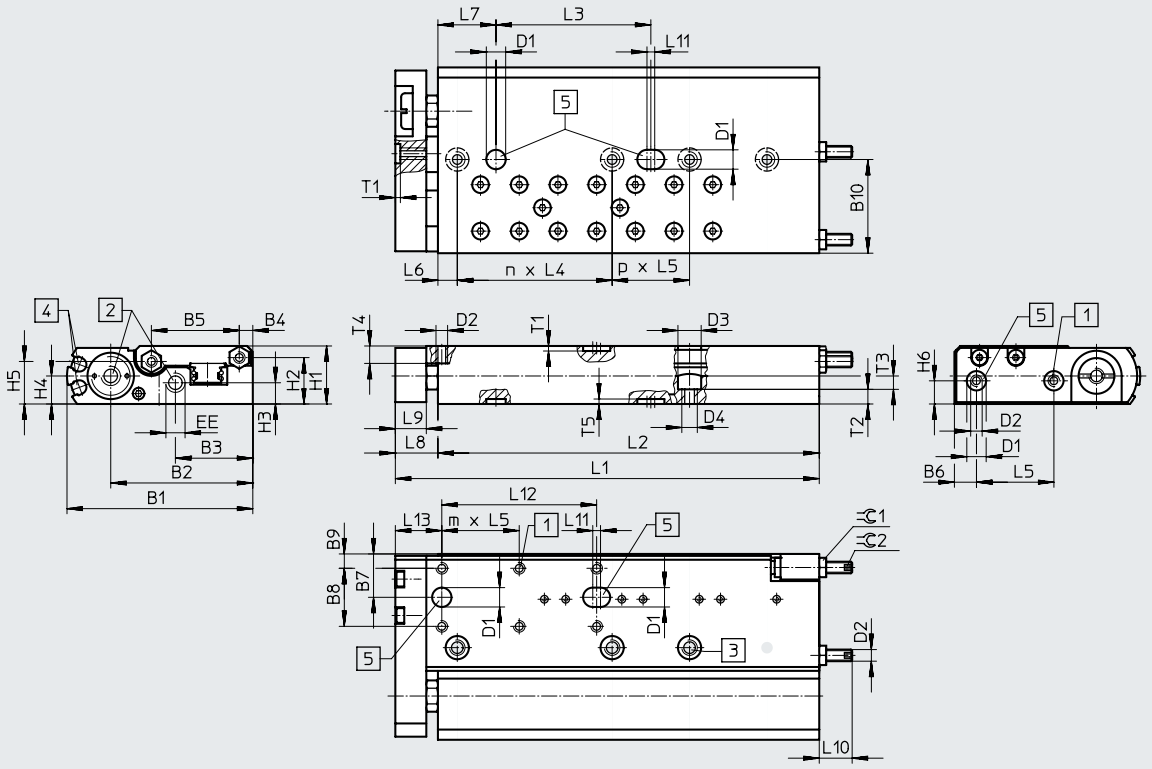

[1] Mounting thread
[2] Compressed air supply ports
[3] Through-holes for mounting the drive
[4] Sensor slot for proximity switch SME/SMT-10
[5] Centring holes (centring sleeves included in the scope of delivery)

ø [mm]	B1	B2	B3	B4	B5	B6	B7	B8	B9	B10	D1 ø H7	D2	D3 ø
10	48	36.7	20	3.5	22.7	5.7	11.2	15	3.7	24.2	5	M3	6

ø [mm]	D4	EE	H1	H2	H3	H4	H5	H6	L5	L6	L7	L8
10	M4	M5	15	12	5.5	7.25	11	6	20	5	15	11

ø [mm]	L9	L10	L11	L12	L13	T1	T2	T3	T4	T5 +0.1	⌯1	⌯2
10	8	8.5	2	40	12	1.3	3.8	3	4.5	1.2	5	1.5

ø [mm]	Stroke [mm]	L1	L2	L3	L4	m	n	p
10	10	59.5	48.5	20	20	1	1	–
	20	69.5	58.5					
	30	79.5	68.5			2	2	
	40	89.5	78.5	40			3	
	50	109.5	98.5		40		1	2

Data sheet

Dimensions Download CAD data ➔ www.festo.com

ø 16

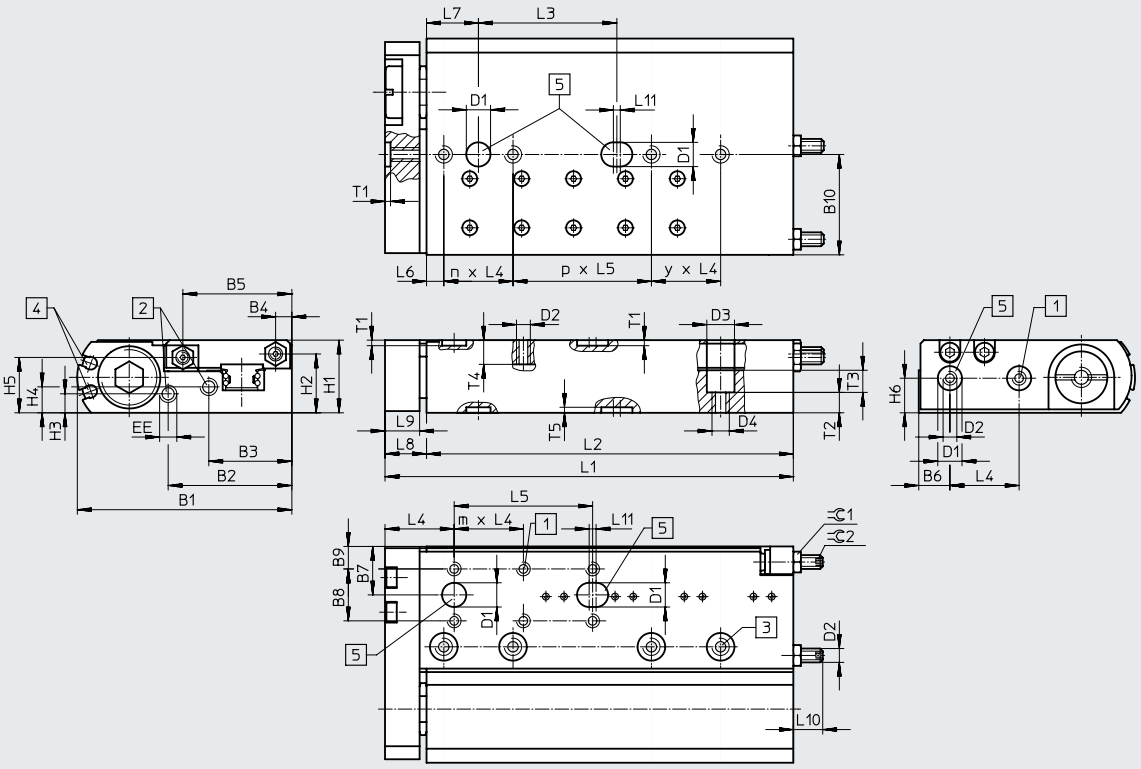

[1] Mounting thread
[2] Compressed air supply ports
[3] Through-holes for mounting the drive
[4] Sensor slot for proximity switch SME/SMT-10
[5] Centring holes (centring sleeves included in the scope of delivery)

ø [mm]	B1	B2	B3	B4	B5	B6	B7	B8	B9	B10	D1 ø H7	D2	D3 ø
16	62	35.75	24	4.7	31.5	9	14	15	6.5	29	7	M4	8

ø [mm]	D4	EE	H1	H2	H3	H4	H5	H6	L4	L5	L6	L7
16	M5	M5	21	17	5.5	7.5	16	10	20	40	5	15

ø [mm]	L8	L9	L10	L11	T1	T2	T3	T4	T5 +0.1	≡C1	≡C2
16	12	10	8.5	2	1.6	5.9	6	7	1.5	6	2

ø [mm]	Stroke [mm]	L1	L2	L3	m	n	p	y
16	10	68	56	20	1	1	–	–
	20	78	66			2		
	30	88	76		2			
	40	98	86	40		3		
	50	118	106			1	1	1
	80	160	148				2	–

Data sheet

Ordering data			
⌀ [mm]	Stroke [mm]	Part no.	Type
6			
	10	**170503**	**SLF-6-10-P-A**
	20	**170504**	**SLF-6-20-P-A**
	30	**170505**	**SLF-6-30-P-A**
10			
	10	**170506**	**SLF-10-10-P-A**
	20	**170507**	**SLF-10-20-P-A**
	30	**170508**	**SLF-10-30-P-A**
	40	**170509**	**SLF-10-40-P-A**
	50	**170510**	**SLF-10-50-P-A**
16			
	10	**170511**	**SLF-16-10-P-A**
	20	**170512**	**SLF-16-20-P-A**
	30	**170513**	**SLF-16-30-P-A**
	40	**170514**	**SLF-16-40-P-A**
	50	**170515**	**SLF-16-50-P-A**
	80	**170516**	**SLF-16-80-P-A**

Accessories

Ordering data

		6 Part no.	Type	10 Part no.	Type	16 Part no.	Type
Centring pins/sleeves for SLF[1]							Data sheets → Internet: zbh, zbs
	Housing Slide Yoke	**525273**	**ZBS-2**	**189652**	**ZBH-5**	**186717**	**ZBH-7**

1) Scope of delivery: 10 per pack

Ordering data – One-way flow control valves

Data sheets → Internet: grla

	Connection Thread	For tubing O.D.	Material	Part no.	Type
	M5	3	Metal version	**193137**	**GRLA-M5-QS-3-D**
		4		**193138**	**GRLA-M5-QS-4-D**

Ordering data – Proximity switches for C-slot, magneto-resistive

Data sheets → Internet: smt

	Type of mounting	Switching output	Electrical connection, outlet direction of connection	Cable length [m]	Part no.	Type
N/O contact						
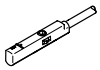	Insertable in the slot from above	PNP	Cable, 3-wire, in-line	2.5	**551373**	**SMT-10M-PS-24V-E-2,5-L-OE**
			Plug M8x1, 3-pin, in-line	0.3	**551375**	**SMT-10M-PS-24V-E-0,3-L-M8D**
			Plug M8x1, 3-pin, crosswise	0.3	**551376**	**SMT-10M-PS-24V-E-0,3-Q-M8D**

Ordering data – Proximity switches for C-slot, magnetic reed

Data sheets → Internet: sme

	Type of mounting	Switching output	Electrical connection, outlet direction of connection	Cable length [m]	Part no.	Type
N/O contact						
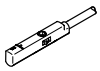	Insertable in the slot from above	Contacting	Plug M8x1, 3-pin, in-line	0.3	**551367**	**SME-10M-DS-24V-E-0,3-L-M8D**
			Cable, 3-wire, in-line	2.5	**551365**	**SME-10M-DS-24V-E-2,5-L-OE**
			Cable, 2-wire, in-line	2.5	**551369**	**SME-10M-ZS-24V-E-2,5-L-OE**

Ordering data – Connecting cables

Data sheets → Internet: nebu

	Electrical connection, left	Electrical connection, right	Cable length [m]	Part no.	Type
	Straight socket, M8x1, 3-pin	Cable, open end, 3-wire	2.5	**541333**	**NEBU-M8G3-K-2.5-LE3**
			5	**541334**	**NEBU-M8G3-K-5-LE3**
	Angled socket, M8x1, 3-pin	Cable, open end, 3-wire	2.5	**541338**	**NEBU-M8W3-K-2.5-LE3**
			5	**541341**	**NEBU-M8W3-K-5-LE3**

Accessories

Adapter kit
HAPS

Material:
Wrought aluminium alloy
Free of copper and PTFE
RoHS-compliant

Note
The kit includes the individual mounting interface as well as the necessary mounting material.

Permissible drive/drive combinations with adapter kit

Download CAD data ➔ www.festo.com

Combination	[1] Drive size	[2] Drive size	Adapter kit KBK[1]	Part no.	Type	Quantity required	PE[2]
SLG/SLF	**SLG**	**SLF**	**HAPS**				
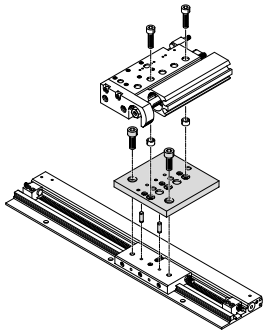	8, 12	6, 10	2	**189533**	**HAPS-11**	1	1
	12	16		**189533**	**HAPS-11**	1	1
	18	10, 16		**189534**	**HAPS-12**	1	1

1) Corrosion resistance class CRC 1 to Festo standard FN 940070
Low corrosion stress. Dry internal application or transport and storage protection. Also applies to parts behind covers, in the non-visible interior area, and parts which are covered in the application (e.g. drive trunnions).
2) Packaging unit quantity.