Electric cylinder units EPCS-BS

This product is also available as a modular mechanical system
Electric cylinder EPCC

Key features

At a glance
Plug and work with the Simplified Motion Series

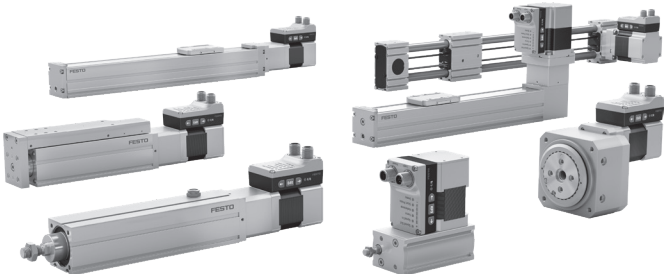

The simplicity of pneumatics is now combined for the first time with the advantages of electric automation thanks to the Simplified Motion Series. These integrated drives are the perfect solution for all users who are looking for an electric alternative for very simple movement and positioning tasks between two mechanical end positions, but don't want the commissioning process for traditional electric drive systems that can often be quite complex.

IO-Link

There is no need for any software since operation is simply based on the "plug and work" principle. Digital I/O (DIO) and IO-Link are always automatically included – a product with two types of control as standard.

Integrated

The integrated electronics in the drive are at the core of the Simplified Motion Series.

Simple

For commissioning, simply set all relevant parameters directly on the drive:

- Speed and force
- Reference end position and cushioning
- Manual operation

Standardised

Electrical connection via M12 plug design

- Power (4-pin): power supply for the motor
- Logic (8-pin): control signal, sensor signal and power for the integrated electronics

Connected

Use of extended functions possible via IO-Link:

- Motion parameters can be set remotely
- Copy and backup function for transferring parameters
- Read function for extended process parameters

The functions of the Simplified Motion Series

Basic profile for movement between two end positions: with speed control

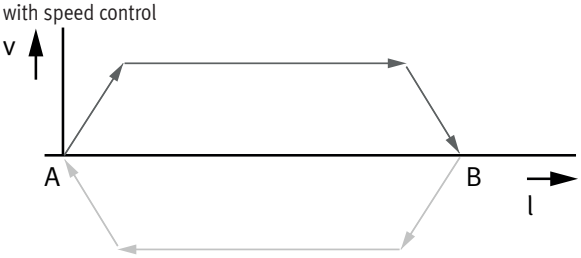

Extended motion profile for simplified press-fitting and clamping functions: with speed and force control

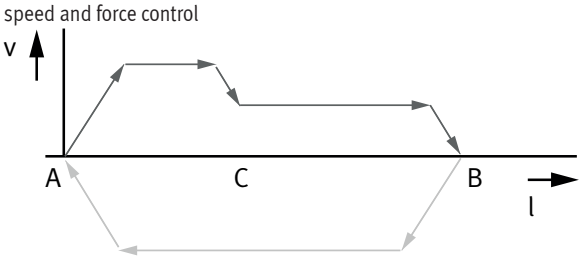

- These drives are designed for simple movements between two end positions.
- Proximity sensors are required in order to implement any intermediate positions.

The products in the Simplified Motion Series

Spindle axis unit
ELGS-BS-KF

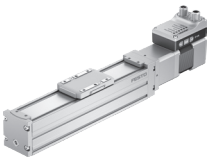

Toothed belt axis unit
ELGS-TB-KF

Mini slide unit
EGSS-BS-KF

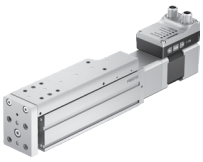

Electric cylinder unit
EPCS

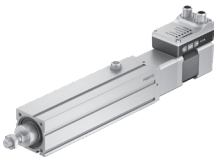

Toothed belt axis unit
ELGE

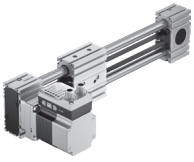

Rotary drive unit
ERMS

Electric cylinder unit
EPCE

Key features

At a glance

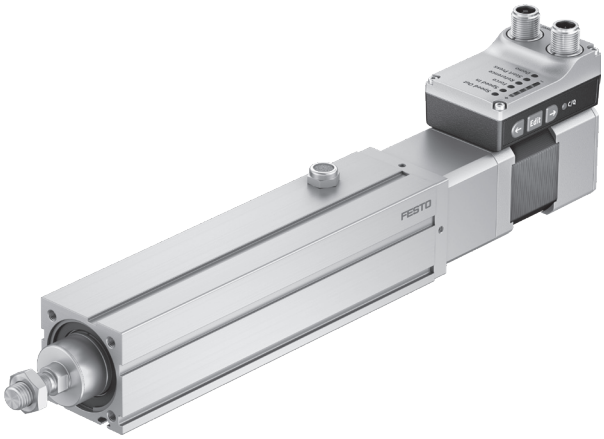

- Without external servo drive: all the necessary electronic components are combined in the integrated drive
- Two control options integrated as standard: digital I/O and IO-Link
- Complete solution for simple movements between mechanical end positions
- Simplified commissioning: all parameters can be manually set directly on the drive
- No special expertise required for commissioning
- End-position feedback similar to that of a conventional proximity sensor is integrated as standard
- Very high-quality ball screw with low internal friction
- Ideal for precise and quick movement in sorting, distributing or clamping applications

Modular and flexible with motor, motor mounting kit and servo drive

This product is also available as a modular mechanical system as electric cylinder EPCC-BS:

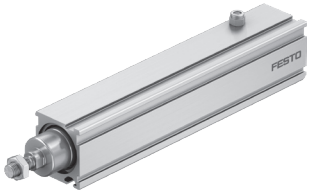

When it comes down to flexibility and adaptability, the compact dimensions and variable combinations are ideal for making optimal use of the installation space.

- Compact: optimum ratio of installation space to working space
- Unique: "one-size-down" mounting system
- Modular: individual combinations with motor, motor mounting kit and servo drive
- Flexible: wide range of mounting options for optimum machine integration

Typical handling systems

For applications where compact dimensions are essential, the axes ELGC can be combined into very space-saving handling systems that are suitable for assembly systems, test and inspection systems, small parts handling, the electronics industry and desktop applications. Combining the very compact linear axes ELGC, mini slide EGSC and electric cylinder EPCC offers an optimum ratio of installation space to working space. These feature a common system approach and platform architecture and the connections are largely adapterless.

Cantilever system

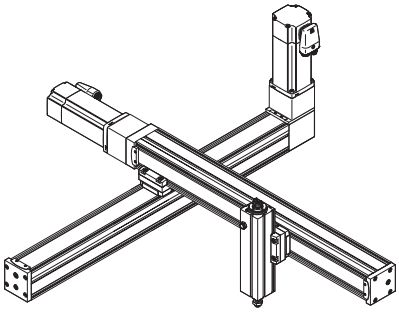

Planar surface gantry

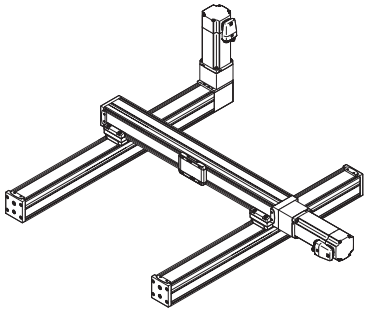

3-dimensional gantry

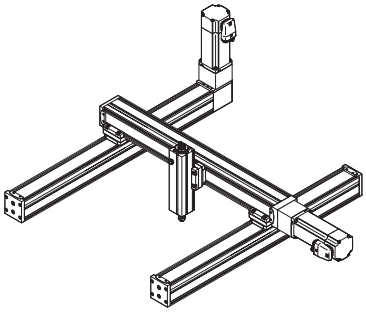

Key features

Combination matrix between axis ELGC/ELGS-TB, ELGC/ELGS-BS, mini slide EGSC/EGSS-BS, electric cylinder EPCC/EPCS-BS and guide axis ELFC

Mounting options with profile mounting and via angle kit

		Assembly axis ELGC-BS/-TB; ELFC; EGSC-BS; EPCC-BS; ELGS-BS/-TB; EGSS-BS, EPCS-BS			
	Size	25	32	45	60
Base axis ELGC-BS/-TB; ELFC; ELGS-BS/-TB	32	■	–	–	–
	45	–	■	–	–
	60	–	–	■	–
	80	–	–	–	■

With profile mounting EAHF-L2-...-P-D...

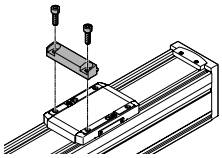

- Mounting option: base axis with one-size-down assembly axis

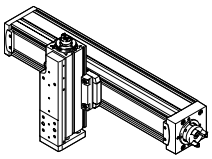

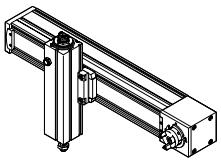

With angle kit EHAA-D-L2-...-AP

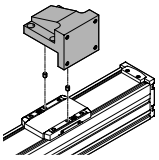

- Mounting option: base axis rotated through 90° with one-size-down assembly axis

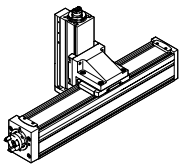

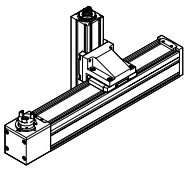

Combination matrix between axis ELGC/ELGS-TB, ELGC/ELGS-BS, mini slide EGSC/EGSS-BS, electric cylinder EPCC/EPCS-BS and guide axis ELFC

Assembly options with adapter kit or direct mounting

		Assembly axis ELGC-BS/-TB; ELFC; EGSC-BS; EPCC-BS; ELGS-BS/-TB; EGSS-BS, EPCS-BS				
	Size	25	32	45	60	80
Base axis ELGC-BS/-TB; ELFC; ELGS-BS/-TB	32	■		–	–	–
	45	–	■		–	–
	60	–	–	■		–
	80	–	–	–	■	

		Assembly axis EGSC-BS; EGSS-BS			
	Size	25	32	45	60
Base axis EGSC-BS; EGSS-BS	25	■	–	–	–
	32	–	■	–	–
	45	–	–	■	–
	60	–	–	–	■

With adapter kit EHAA-D-L2

- Mounting option: base axis with the same size assembly axis
- Mounting option: base axis with height adjustment for one-size-down assembly axis
- When motors are mounted using parallel kits, this may lead to interfering contours. In this case, the adapter plate is required for height compensation

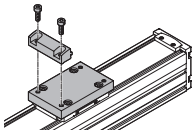

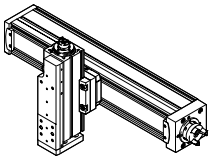

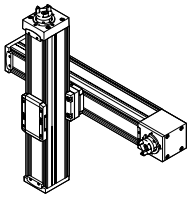

With direct mounting

- Mounting option: base axis with the same size assembly axis

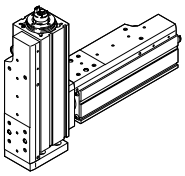

Type codes

001	Series	
EPCS	Electric cylinder	

002	Drive system	
BS	Ball screw drive	

003	Size	
32	32	
45	45	
60	60	

004	Stroke	
25	25	
50	50	
75	75	
100	100	
125	125	
150	150	
175	175	
200	200	
250	250	
300	300	
350	350	
400	400	
500	500	

005	Spindle pitch	
3P	3 mm	
5P	5 mm	
8P	8 mm	
10P	10 mm	
12P	12 mm	

006	Position sensing	
A	For proximity sensor	

007	Motor type	
ST	Stepper motor ST	

008	Controller	
M	Integrated	

009	Control panel	
H1	Integrated	

010	Bus protocol/activation	
PLK	PNP and IO-Link®	
NLK	NPN and IO-Link®	

011	End-position sensing	
AA	With integrated end-position sensing	

012	Cable outlet direction	
	Standard	
D	Underneath	
L	Left	
R	Right	

013	Electrical accessories	
	None	
L1	Adapter for operation as IO-Link® device	

014	Operating instructions	
	With operating instructions	
DN	Without operating instructions	

Peripherals overview

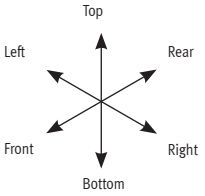

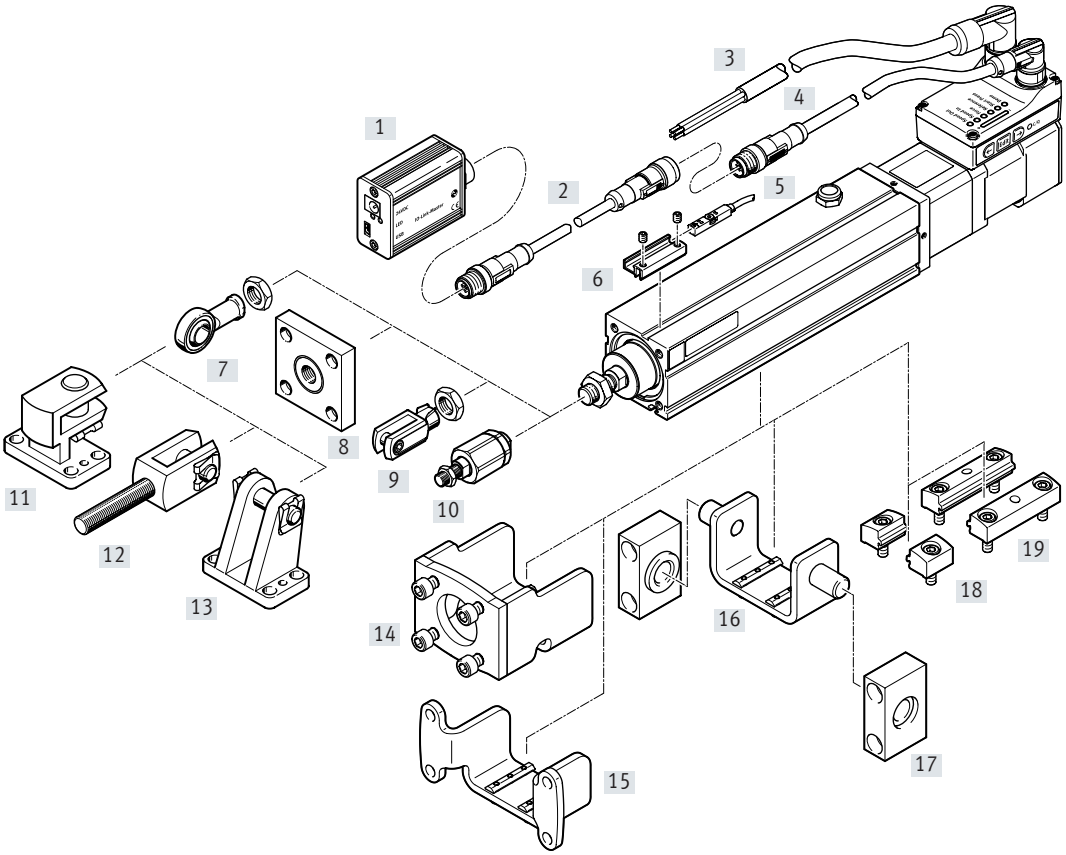

Motor mounting variants

Standard	[D] Underneath	[L] Left	[R] Right

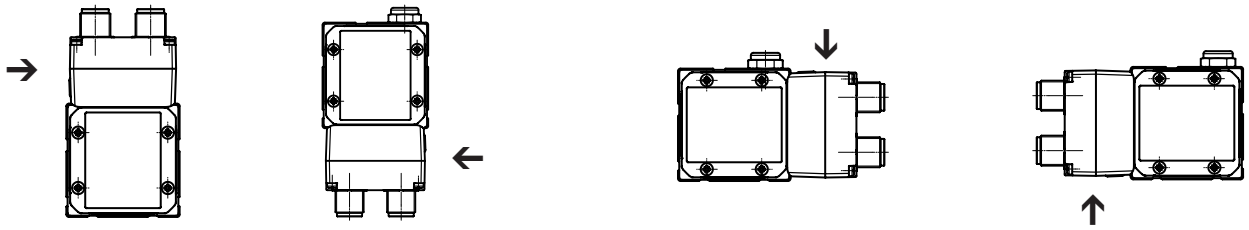

Control elements

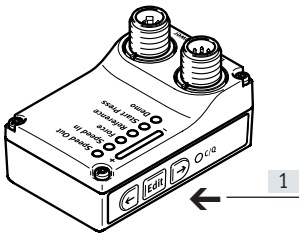

[1] Pushbuttons for parameterisation and control

Peripherals overview

Accessories			
	Type/order code	Description	→ Page/Internet
[1]	IO-Link master USB CDSU-1	For straightforward use of the electric cylinder unit with IO-Link	31
[2]	Adapter NEFC-M12G8	• Connection between the motor and the IO-Link master • Only for use with IO-Link Port Class A Master (recommended)	31
[3]	Supply cable NEBL-T12	For connecting load and logic supply	31
[4]	Connecting cable NEBC-M12	For connection to a controller	31
[5]	Proximity sensors[1)] SMT-8M	Magnetic proximity sensors, for T-slot	30
[6]	Sensor bracket[1)] EAPM-L2	For mounting the proximity sensors on the axis. The proximity sensors can only be mounted using the sensor bracket	30
[7]	Rod eye SGS/CRSGS	With spherical bearing	29
[8]	Coupling piece KSG	For compensating radial deviations	29
[9]	Rod clevis SG/CRSG	Permits a swivelling movement of the cylinder in one plane	29
[10]	Self-aligning rod coupler FK/CRFK	For compensating radial and angular deviations	29
[11]	Right angle clevis foot LQG	For rod eye SGS	29
[12]	Rod clevis SGA	For swivel mounting of the cylinder	29
[13]	Clevis foot LBG/LBG-...-R3	With parallel motor mounting, for spherical bearing	29
[14]	Adapter kit EAHA-P2	• For mounting the swivel flange and trunnion flange on the front • Can only be mounted on the rear in conjunction with parallel kit EAMM-U	27
[15]	Flange mounting EAHH-P2	• For mounting the electric cylinder via the profile • Position freely selectable along the cylinder length	26
[16]	Swivel mounting EAHS-P2	Position freely selectable along the cylinder length	28
[17]	Trunnion support LNZG	For cylinders with trunnion flange mounting	28
[18]	Profile mounting EAHF-L2-P-S	For mounting the axis on the side of the profile	24
[19]	Profile mounting EAHF-L2-P	• For mounting the axis on the side of the profile • The profile mounting can be attached to the mounting surface using the drilled hole in the centre	25

1) Proximity sensors are optional and only required in order to sense any intermediate positions.

Data sheet

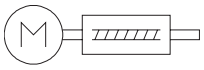

- Ø - Size
  32 ... 60
- l - Stroke length
  25 ... 500 mm

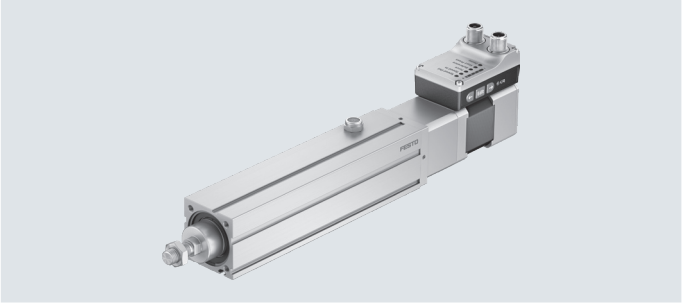

General technical data				
Size		32	45	60
Design		Electric cylinder with ball screw		
Motor type		Stepper motor		
Protection against rotation/guide		With plain-bearing guide		
Mounting position		Any		
Piston rod thread		M8	M10x1.25	M12x1.25
Piston rod end		Male thread		
Working stroke	[mm]	25, 50, 75, 100, 125, 150, 175, 200	25, 50, 75, 100, 125, 150, 175, 200, 250, 300	25, 50, 75, 100, 125, 150, 175, 200, 250, 300, 350, 400, 500
Stroke reserve	[mm]	0		
Max. angle of rotation of the piston rod	[°]	≤ ±1		
Additional functions		Integrated end-position sensing		
		User interface		
Display		LED		
Homing		Positive fixed stop block		
		Negative fixed stop block		
Type of mounting		Via female thread		
		With accessories		
Max. cable length				
Inputs/outputs	[m]	15		
IO-Link operation	[m]	20		

Mechanical data							
Size		32		45		60	
Spindle design		3P	8P	3P	10P	5P	12P
Spindle pitch	[mm/rev]	3	8	3	10	5	12
Spindle diameter	[mm]	8	8	10	10	12	12
Max. payload							
Horizontal	[kg]	24	24	60	40	120	56
Vertical	[kg]	12	9	23	13	46	18
Max. feed force F_x	[N]	150	150	450	250	900	375
Max. radial force[1)]	[N]	75	75	180	180	230	230
Max. speed	[m/s]	0.079	0.21	0.074	0.23	0.09	0.22
Speed press	[m/s]	0.01					
Max. acceleration	[m/s²]	1.5	5	1.5	5	1.5	5
Repetition accuracy	[mm]	±0.02					
Reversing backlash[2)]	[mm]	≤ 0.1					
Position sensing		Via proximity sensor					
		Via IO-Link					

1) At the driving shaft
2) When new

Data sheet

Electrical data				
Size		32	45	60
Motor				
Nominal voltage DC	[V]	24 (±15%)		
Nominal current	[A]	3	3	5.3
Max. current consumption (load)	[A]	3	3	5.3
Max. current consumption (logic)	[mA]	300		
Encoder				
Rotor position encoder		Absolute encoder, single turn		
Rotor position encoder measuring principle		Magnetic		
Rotor position encoder resolution	[bit]	16		

Interfaces				
Size		32	45	60
Parameterisation interface				
IO-Link		Yes		
User interface		Yes		
Digital inputs				
Quantity		2		
Switching logic		PNP		
		NPN		
Characteristics		Not galvanically isolated		
		Configurable		
Specification		Based on IEC 61131-2, type 1		
Operating range	[V]	24		
Digital outputs				
Quantity		2		
Switching logic		PNP		
		NPN		
Rotor position encoder		Absolute encoder, single turn		
Characteristics		Not galvanically isolated		
		Configurable		
Max. current	[mA]	100		

Data sheet

Technical data – IO-Link				
Size		32	45	60
SIO mode support		Yes		
Communication mode		COM3 (230.4 kBd)		
Connection technology		Plug		
Port class		A		
Number of ports		1		
Process data width OUT	[byte]	2		
Process data content OUT	[bit]	1 (Move in)		
	[bit]	1 (Move out)		
	[bit]	1 (Quit Error)		
Process data width IN	[byte]	2		
Process data content IN	[bit]	1 (State Device)		
	[bit]	1 (State Move)		
	[bit]	1 (State in)		
	[bit]	1 (State out)		
Service data content IN	[bit]	32 (Force)		
	[bit]	32 (Position)		
	[bit]	32 (Speed)		
Minimum cycle time	[ms]	1		
Data memory required	[kilobyte]	0.5		
Protocol version		Device V 1.1		

Operating and environmental conditions				
Size		32	45	60
Insulation class		B		
Ambient temperature	[°C]	0 ... +50		
Storage temperature	[°C]	–20 ... +60		
Note on ambient temperature		Above an ambient temperature of 30°C, the power must be reduced by 2% per K		
Temperature monitoring		Switch-off for excessive temperature		
		Integrated precise CMOS temperature sensor with analogue output		
Relative humidity	[%]	0 ... 90 (non-condensing)		
Protection class		III		
Degree of protection		IP40		
Duty cycle	[%]	100		
CE marking		To EU EMC Directive		
		To EU RoHS Directive		
KC mark		KC EMC		
Certification		RCM mark		
Vibration resistance		Transport application test with severity level 1 to FN 942017-4 and EN 61800-2 and EN 61800-5-1		
Shock resistance		Shock test with severity level 1 to FN 942017-5 and EN 61800-2		
Maintenance interval		Lifetime lubrication		

Weight				
Size		32	45	60
Basic weight with 0 mm stroke	[g]	818	1185	2294
Additional weight per 10 mm stroke	[g]	24	41	69
Moving mass at 0 mm stroke	[g]	98	179	305
Additional moving mass per 10 mm stroke	[g]	3.3	4.9	6.5

Data sheet

Materials

Sectional view

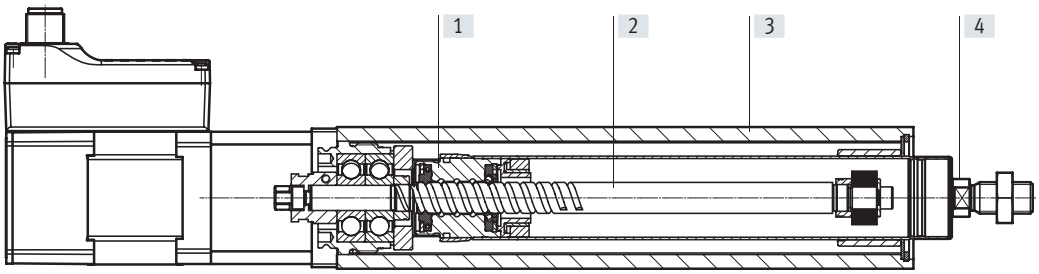

Electric cylinder		
[1]	Spindle nut	Steel
[2]	Spindle	Rolled steel
[3]	Housing	Smooth-anodised wrought aluminium alloy
[4]	Piston rod	High-alloy stainless steel
	Note on materials	RoHS-compliant
		Contains paint-wetting impairment substances

Pin allocation

Power supply

Plug

M12x1, 4-pin, T-coded to EN 61076-2-111

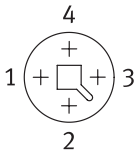

Pin	Function
1	Power voltage supply (24 V DC)
2	Reference potential, power voltage supply (GND)
3	Reserved, do not connect
4	Functional earth (FE)

Logic interface

Plug

M12x1, 8-pin, A-coded to EN 61076-2-101

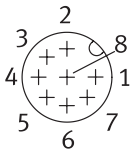

When used with digital I/O

Pin	Function
1	Logic voltage supply (24 V DC)
2	Digital output 1 (State "In")
3	Digital output 2 (State "Out")
4	Reference potential, logic voltage supply (GND)
5	Digital input 1 (Move "In")
6	Digital input 2 (Move "Out")
7	Reserved, do not connect
8	Reference potential, logic voltage supply (GND)

When used with IO-Link

Pin	Function
1	L+ IO-Link power supply (24 V DC)
2	Reserved, do not connect
3	C/Q communication with the IO-Link master
4	L – Reference potential, IO-Link power supply (0 V)
5	Reserved, do not connect
6	Reserved, do not connect
7	Reserved, do not connect
8	L – Reference potential, IO-Link power supply (0 V)

Data sheet

Maximum permissible loads on the piston rod

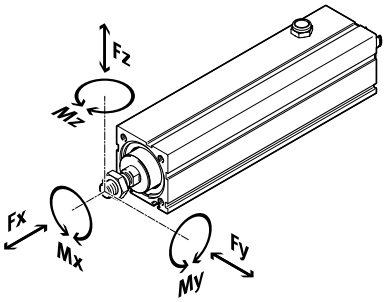

If there are two or more forces and torques simultaneously acting on the piston rod, the following equations must be satisfied:
F_1/M_1 = dynamic value
F_2/M_2 = maximum value

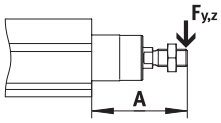

$$f_v = \frac{|F_{y1}|}{F_{y2}} + \frac{|F_{z1}|}{F_{z2}} + \frac{|M_{y1}|}{M_{y2}} + \frac{|M_{z1}|}{M_{z2}} \leq 1$$

$$|Fx| \leq Fx_{max}$$

$$|Mx| \leq Mx_{max}$$

Maximum permissible transverse loads Fy_{max} and Fz_{max} on the piston rod as a function of projection A

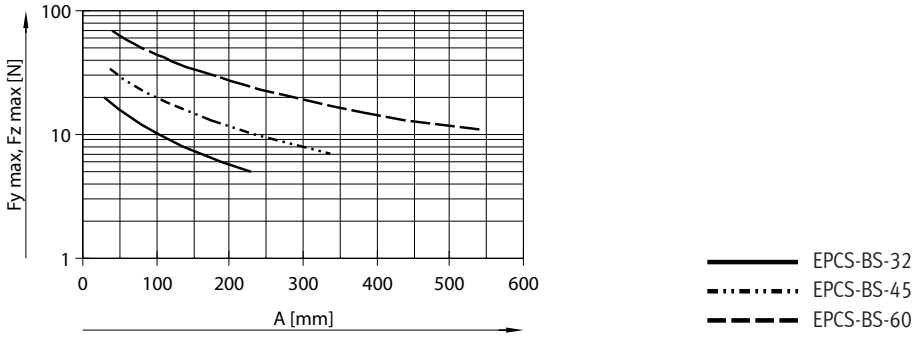

Size		32		45		60	
Spindle design		3P	8P	3P	10P	5P	12P
Fx_{max} (static)	[N]	150	150	450	450	1000	1000
Mx_{max}	[Nm]	0					
My_{max}, Mz_{max}	[Nm]	1.5		2.9		6.4	

Note

Engineering software
PositioningDrives
→ www.festo.com

Data sheet

Piston rod deflection f_2 as a function of projection A and transverse load F

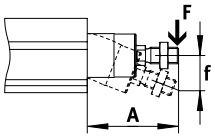

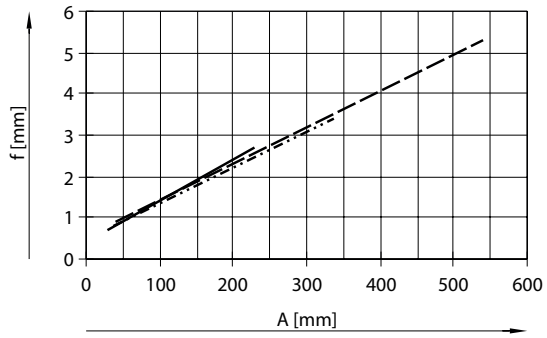

EPCS-BS-32 (F_2 = 3.5 N)
EPCS-BS-45 (F_2 = 4.0 N)
EPCS-BS-60 (F_2 = 8.0 N)

$$f_1 = \frac{F_1}{F_2} \cdot f_2$$

f_1 = Piston rod deflection caused by transverse load [mm]
F_1 = Transverse load [N]
F_2 = Standardised transverse load [N] (constant load from graph)
f_2 = Piston rod deflection caused by transverse load [N] (value read from graph)

Example: electric cylinder EPCS-32-50-8P with a transverse load of 7 N
F_1 = 7 N und $F_{standard}$ = 3.5 N

Value read from graph for EPCS-32 and projection = 50 mm
f_2 = 1 mm

Calculation of deflection caused by transverse load:

$$f_1 = \frac{F_1}{F_2} \cdot f_2 = \frac{3\ N}{1{,}5\ N} \cdot 1\ mm = 2\ mm$$

Data sheet

Calculating the mean feed force F_{xm} with the electric cylinder EPCS

The peak feed force value must not exceed the maximum feed force within a movement cycle. The peak value is generally achieved in vertical operation during the acceleration phase of the upwards stroke. If the maximum feed force is exceeded, this can increase wear and thus shorten the service life of the ball screw. The maximum speed must likewise not be exceeded:

$F_x \leq F_{xmax}$
and
$v_x \leq v_{xmax}$

Calculating the mean feed force F_{xm} (to DIN 69051-4)

During operation, the continuous feed force may be briefly exceeded up to the maximum feed force. The continuous feed force must, however, be adhered to when averaged over a movement cycle:

$F_{xm} \leq F_{xcontinuous}$

$$F_{xm} = \sqrt[3]{\sum F_x^3 \cdot \frac{v_x}{v_{xm}} \cdot \frac{q}{100}} =$$

$$F_{xm} = \sqrt[3]{F_{x1}^3 \cdot \frac{v_{x1}}{v_{xm}} \cdot \frac{q_1}{100} + F_{x2}^3 \cdot \frac{v_{x2}}{v_{xm}} \cdot \frac{q_2}{100} + F_{x3}^3 \cdot \frac{v_{x3}}{v_{xm}} \cdot \frac{q_3}{100} + \cdots}$$

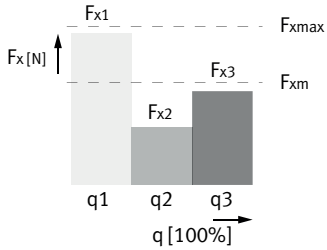

Mean feed speed (to DIN 69051-4)

$$v_{xm} = \sum v_x \cdot \frac{q}{100} = v_{x1} \cdot \frac{q_1}{100} + v_{x2} \cdot \frac{q_2}{100} + v_{x3} \cdot \frac{q_3}{100} + \cdots$$

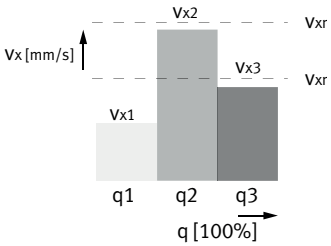

F_x	Feed force
F_{xm}	Mean feed force
$F_{xmax.}$	Max. feed force
$F_{xcontinuous}$	Continuous feed force
q	Time
v_x	Feed speed
v_{xm}	Mean feed speed
$v_{xmax.}$	Max. feed speed

Data sheet

Mean feed force F_{xm} as a function of running performance L, with an operating coefficient f_B of 1.0 at room temperature

Size 32

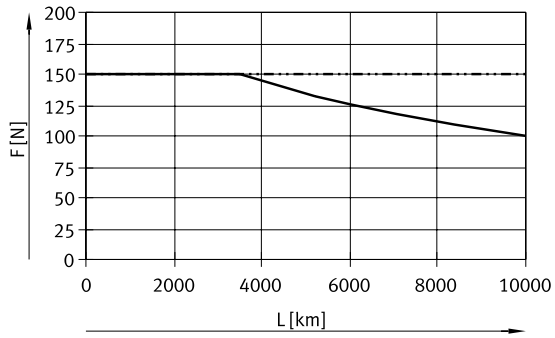

EPCS-BS-32-3P
EPCS-BS-32-8P

Size 45

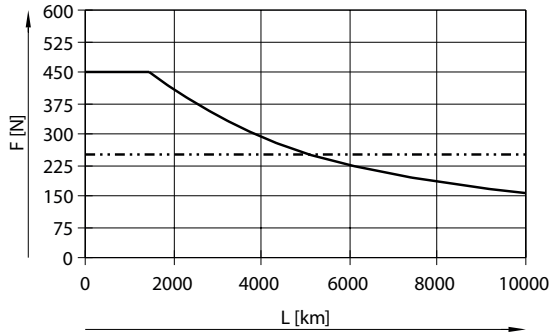

EPCS-BS-45-3P
EPCS-BS-45-10P

Size 60

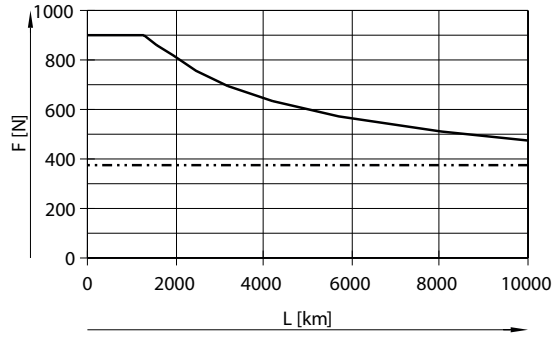

EPCS-BS-60-5P
EPCS-BS-60-12P

$$L_1 = \frac{L}{f_B^3}$$

L_1 Actual service life
L Target service life (➔ graphs)
f_B Operating coefficient

Service life taking into account the operating coefficient

Load[1)]	Operating coefficient f_B	Application example
None	1.0 ... 1.2	Measuring machine
Light	1.2 ... 1.4	Handling, robotics
Medium	1.4 ... 1.6	Press-in operations
High	1.6 ... 2.0	Construction, agriculture

1) This refers to loads caused by impact, temperature, contamination, shock and vibrations that affect the cylinder or piston rod.

Note

The specifications for running performance are based on experimentally determined and theoretically calculated data (at room temperature). The running performance that can be achieved in practice can deviate considerably from the specified curves under different parameters.

Data sheet

Sizing example

Application data:

- Payload: 25 kg
- Mounting position: horizontal
- Stroke: 150 mm
- Max. permissible positioning time: 2 s (one direction)

Step 1: Selection of the smallest possible size from the table ➔ page 8

Mechanical data							
Size		32		45		60	
Spindle design		3P	8P	3P	10P	5P	12P
Max. payload							
Horizontal	[kg]	24	24	60	40	120	56
Vertical	[kg]	12	9	23	13	46	18

➔ Smallest possible size: EPCS-BS-45-10P

Step 2: Selection of max. speed level v for payload m

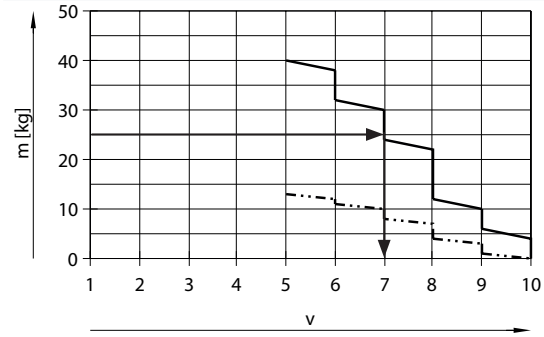

Horizontal
Vertical

➔ Max. speed level for the payload: level 7

Step 3: Reading off the min. positioning time t for stroke l

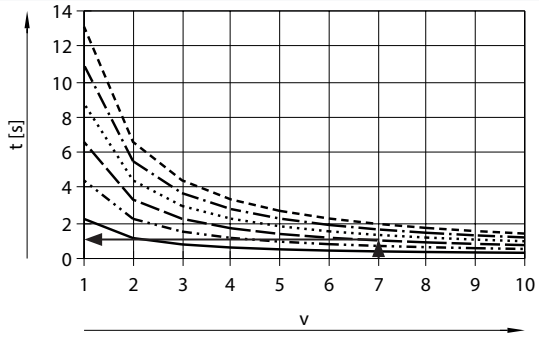

l = 50 mm
l = 100 mm
l = 150 mm
l = 200 mm
l = 250 mm
l = 300 mm

➔ Min. positioning time for 150 mm at level 7: 1 s

Result

The application can be implemented using EPCS-BS-45-150-10P. A minimum positioning time (one direction) of 1 s is achieved. Longer positioning times can be selected at any time using a lower speed level.

Data sheet

Mass m as a function of speed level v

EPCS-BS-32-3P

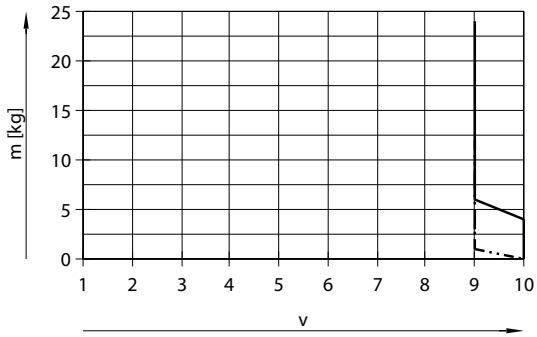

EPCS-BS-32-8P

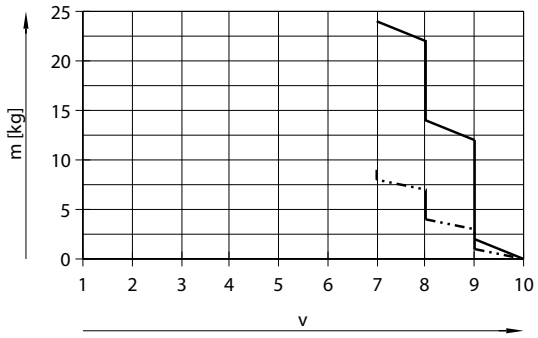

Horizontal
Vertical

EPCS-BS-45-3P

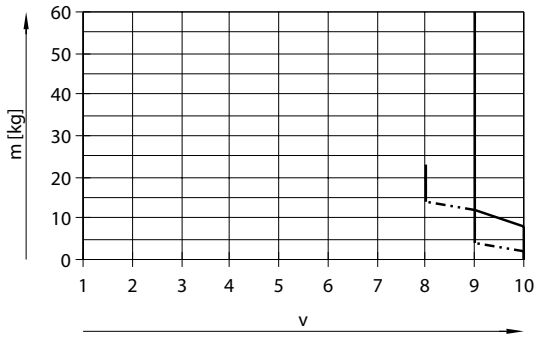

EPCS-BS-45-10P

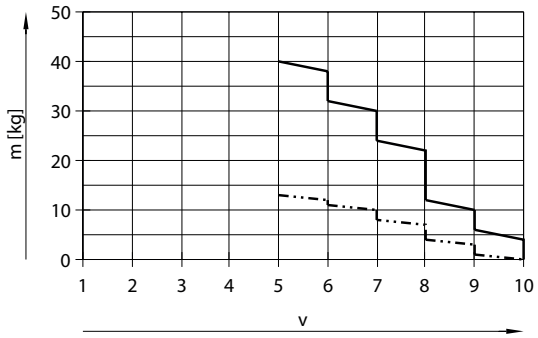

Horizontal
Vertical

EPCS-BS-60-5P

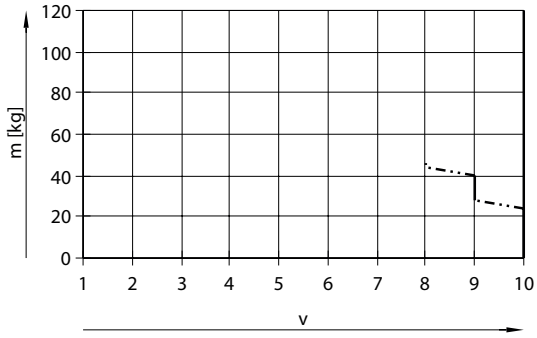

EPCS-BS-60-12P

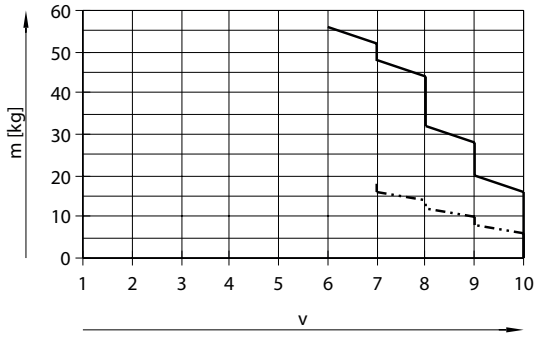

Horizontal
Vertical

Note

The lines represent the maximum values. The lower speed levels can be set at any time.

Data sheet

Positioning time t as a function of speed level v and stroke l

EPCS-BS-32-3P

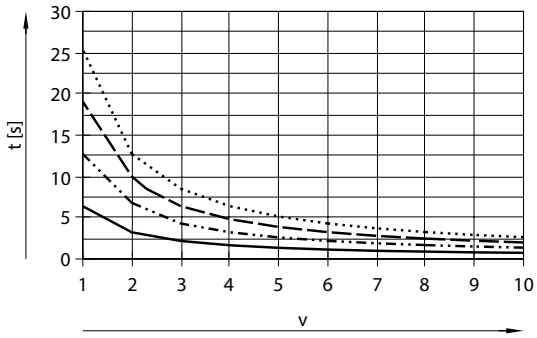

- l = 50 mm
- l = 100 mm
- l = 150 mm
- l = 200 mm

EPCS-BS-32-8P

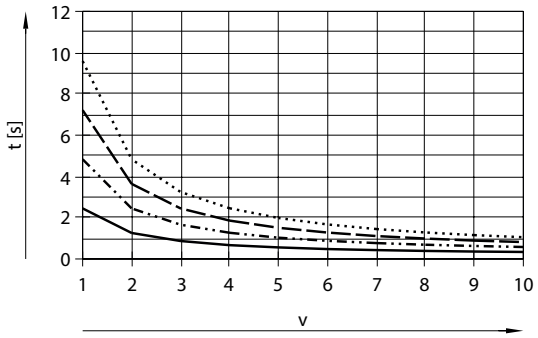

- l = 50 mm
- l = 100 mm
- l = 150 mm
- l = 200 mm

EPCS-BS-45-3P

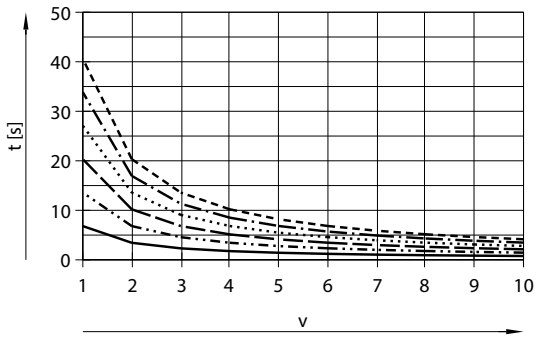

- l = 50 mm
- l = 100 mm
- l = 150 mm
- l = 200 mm
- l = 250 mm
- l = 300 mm

EPCS-BS-45-10P

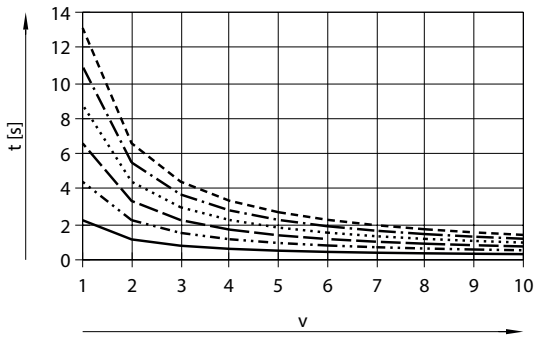

- l = 50 mm
- l = 100 mm
- l = 150 mm
- l = 200 mm
- l = 250 mm
- l = 300 mm

Data sheet

Positioning time t as a function of speed level v and stroke l

EPCS-BS-60-5P

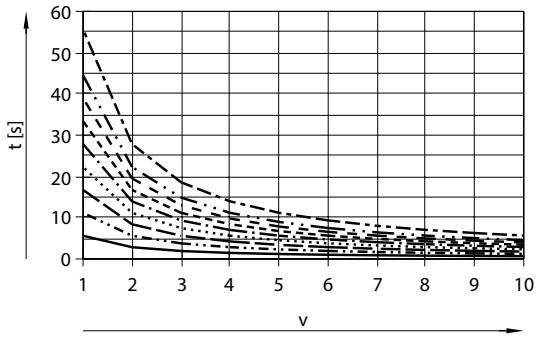

- l = 50 mm
- l = 100 mm
- l = 150 mm
- l = 200 mm
- l = 250 mm
- l = 300 mm
- l = 350 mm
- l = 400 mm
- l = 500 mm

EPCS-BS-60-12P

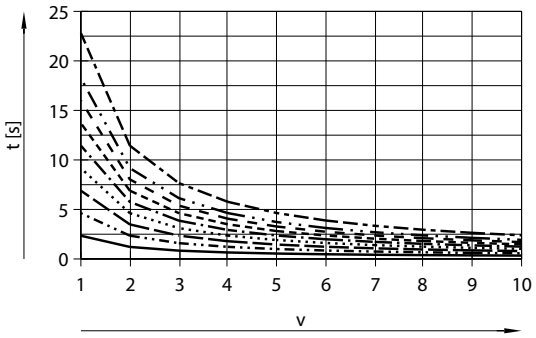

- l = 50 mm
- l = 100 mm
- l = 150 mm
- l = 200 mm
- l = 250 mm
- l = 300 mm
- l = 350 mm
- l = 400 mm
- l = 500 mm

Feed force F as a function of force level F1

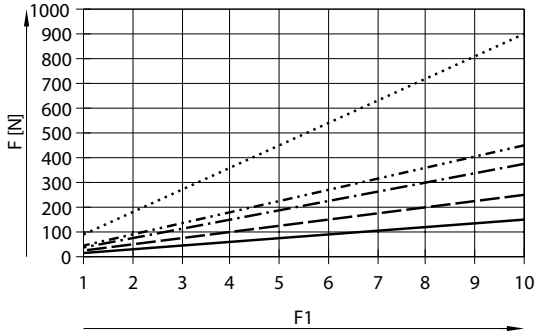

- EPCS-BS-32-3P/-8P
- EPCS-BS-45-3P
- EPCS-BS-45-10P
- EPCS-BS-60-5P
- EPCS-BS-60-12P

Data sheet

Dimensions – With motor

Download CAD data ➔ www.festo.com

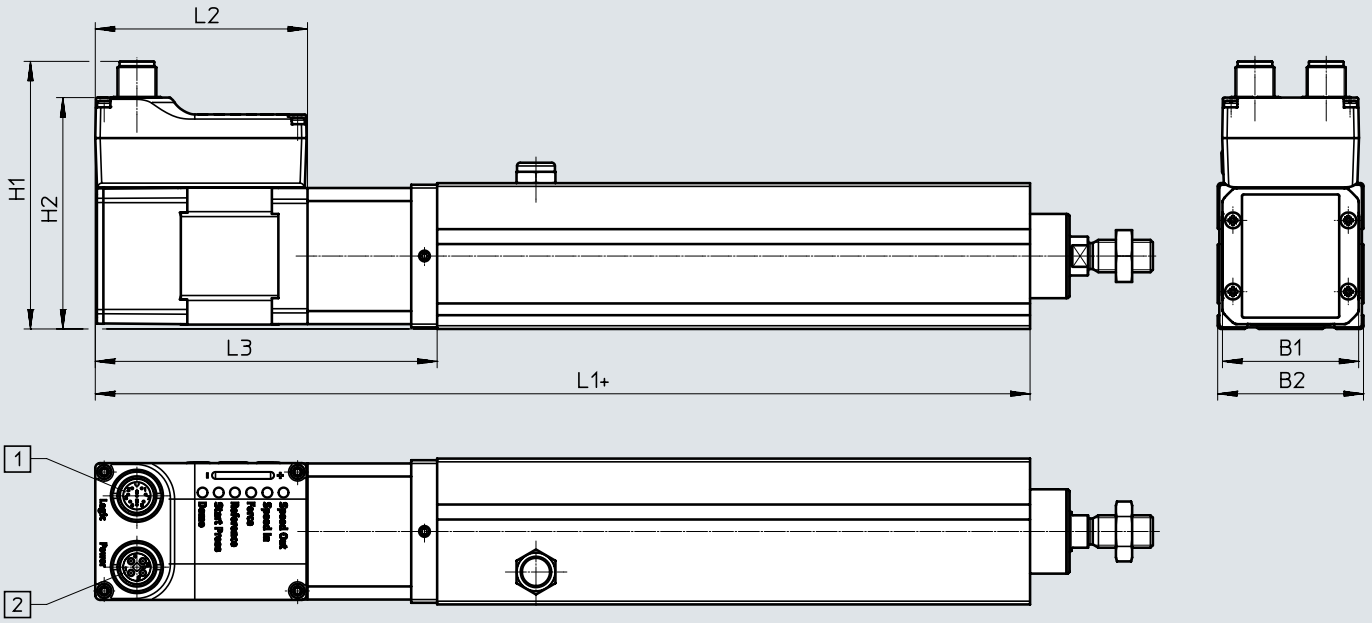

[1] Connecting cable NEBC-M12

[2] Supply cable NEBL-T12

\+ plus stroke length

⌀ [mm]	B1	B2	H1	H2	L1	L2	L3
32	42.3	32	81.1	69.9	175.5	65.5	105.5
45	42.3	45	82.6	71.4	188.5	65.5	105.5
60	56.6	60	97.3	86.1	216.5	73.5	116.5

Data sheet

Dimensions – Mechanical system

Download CAD data ➔ www.festo.com

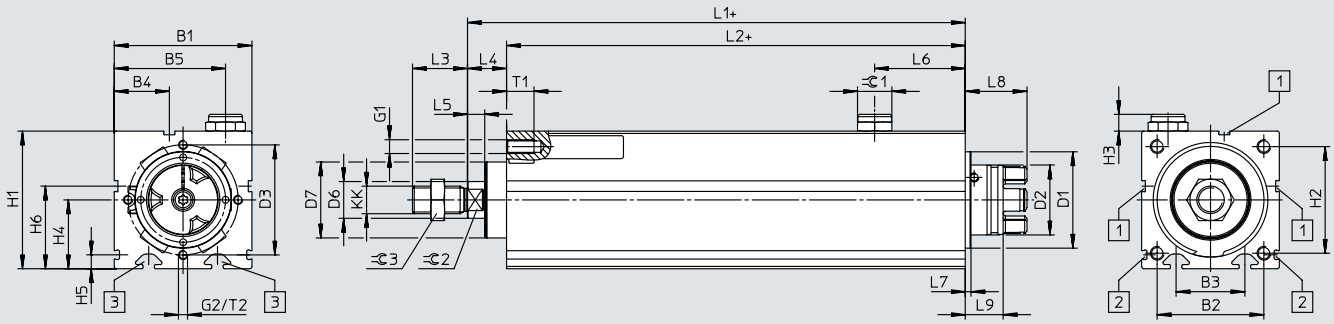

EPCS-BS-32/45

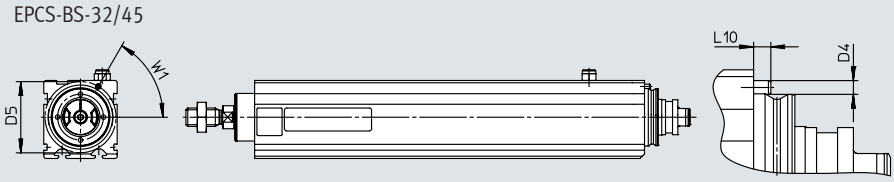

[1] For sensor bracket
[2] For profile mounting
[3] For slot nut mounting
\+ plus stroke length

Size	B1 ±0.15	B2	B3	B4	B5	D1 ⌀	D2 ⌀	D3 ⌀	D4 ⌀
32	32	24	16	8.1	25.5	25	15.5	–	2
45	45	32.5	24	16.5	35	32	16.3	–	3
60	60	46.5	30	24	48.5	42	30.5	48	–

Size	D5 ⌀	D6 ⌀	D7 ⌀	G1	G2	H1 ±0.15	H2	H3	H4
32	31	10	21.3	M4	–	34	24	4.7	–
45	41	12	26.5	M5	–	45	32.5	6.3	–
60	–	16	33.6	M6	M4	60	46.5	7.3	30

Size	H5	H6 +0.15	KK	L1	L2	L3	L4	L5	L6
32	4.9	26	M8	82.9	70	16	12.9	5.2	24.2
45	6.1	28.5	M10x1.25	99.9	83	20	16.9	5.7	30.5
60	6.1	36	M12x1.25	116	100	24	16	7.5	39.5

Size	L7	L8	L9	L10	T1	T2	W1	⌯1	⌯2	⌯3
32	6	19.9	14.5	2.5	8	–	60°	6	9	13
45	6	19.9	14.5	3	10	–	60°	12	10	16
60	2.5	26.9	16.5	–	12	10	–	15	13	18

Data sheet

Ordering data

EPCS-BS-32

Stroke [mm]	Part no.	Type	Stroke [mm]	Part no.	Type
Spindle pitch 3 mm/rev			**Spindle pitch 8 mm/rev**		
50	**8118267**	**EPCS-BS-32-50-3P-A-ST-M-H1-PLK-AA**	50	**8118271**	**EPCS-BS-32-50-8P-A-ST-M-H1-PLK-AA**
100	**8118268**	**EPCS-BS-32-100-3P-A-ST-M-H1-PLK-AA**	100	**8118272**	**EPCS-BS-32-100-8P-A-ST-M-H1-PLK-AA**
150	**8118269**	**EPCS-BS-32-150-3P-A-ST-M-H1-PLK-AA**	150	**8118273**	**EPCS-BS-32-150-8P-A-ST-M-H1-PLK-AA**
200	**8118270**	**EPCS-BS-32-200-3P-A-ST-M-H1-PLK-AA**	200	**8118274**	**EPCS-BS-32-200-8P-A-ST-M-H1-PLK-AA**

EPCS-BS-45

Stroke [mm]	Part no.	Type	Stroke [mm]	Part no.	Type
Spindle pitch 3 mm/rev			**Spindle pitch 10 mm/rev**		
50	**8118275**	**EPCS-BS-45-50-3P-A-ST-M-H1-PLK-AA**	50	**8118281**	**EPCS-BS-45-50-10P-A-ST-M-H1-PLK-AA**
100	**8118276**	**EPCS-BS-45-100-3P-A-ST-M-H1-PLK-AA**	100	**8118282**	**EPCS-BS-45-100-10P-A-ST-M-H1-PLK-AA**
150	**8118277**	**EPCS-BS-45-150-3P-A-ST-M-H1-PLK-AA**	150	**8118283**	**EPCS-BS-45-150-10P-A-ST-M-H1-PLK-AA**
200	**8118278**	**EPCS-BS-45-200-3P-A-ST-M-H1-PLK-AA**	200	**8118284**	**EPCS-BS-45-200-10P-A-ST-M-H1-PLK-AA**
250	**8118279**	**EPCS-BS-45-250-3P-A-ST-M-H1-PLK-AA**	250	**8118285**	**EPCS-BS-45-250-10P-A-ST-M-H1-PLK-AA**
300	**8118280**	**EPCS-BS-45-300-3P-A-ST-M-H1-PLK-AA**	300	**8118286**	**EPCS-BS-45-300-10P-A-ST-M-H1-PLK-AA**

EPCS-BS-60

Stroke [mm]	Part no.	Type	Stroke [mm]	Part no.	Type
Spindle pitch 5 mm/rev			**Spindle pitch 12 mm/rev**		
50	**8118287**	**EPCS-BS-60-50-5P-A-ST-M-H1-PLK-AA**	50	**8118296**	**EPCS-BS-60-50-12P-A-ST-M-H1-PLK-AA**
100	**8118288**	**EPCS-BS-60-100-5P-A-ST-M-H1-PLK-AA**	100	**8118297**	**EPCS-BS-60-100-12P-A-ST-M-H1-PLK-AA**
150	**8118289**	**EPCS-BS-60-150-5P-A-ST-M-H1-PLK-AA**	150	**8118298**	**EPCS-BS-60-150-12P-A-ST-M-H1-PLK-AA**
200	**8118290**	**EPCS-BS-60-200-5P-A-ST-M-H1-PLK-AA**	200	**8118299**	**EPCS-BS-60-200-12P-A-ST-M-H1-PLK-AA**
250	**8118291**	**EPCS-BS-60-250-5P-A-ST-M-H1-PLK-AA**	250	**8118300**	**EPCS-BS-60-250-12P-A-ST-M-H1-PLK-AA**
300	**8118292**	**EPCS-BS-60-300-5P-A-ST-M-H1-PLK-AA**	300	**8118301**	**EPCS-BS-60-300-12P-A-ST-M-H1-PLK-AA**
350	**8118293**	**EPCS-BS-60-350-5P-A-ST-M-H1-PLK-AA**	350	**8118302**	**EPCS-BS-60-350-12P-A-ST-M-H1-PLK-AA**
400	**8118294**	**EPCS-BS-60-400-5P-A-ST-M-H1-PLK-AA**	400	**8118303**	**EPCS-BS-60-400-12P-A-ST-M-H1-PLK-AA**
500	**8118295**	**EPCS-BS-60-500-5P-A-ST-M-H1-PLK-AA**	500	**8118304**	**EPCS-BS-60-500-12P-A-ST-M-H1-PLK-AA**

Ordering data – Modular product system

Ordering table Size	32	45	60	Conditions	Code		Enter code
Module no.	8118264	8118265	8118266				
Series	EPCS				**EPCS**		EPCS
Drive type	Ball screw				**-BS**		-BS
Size	32	45	60		**-...**		
Stroke [mm]	25, 50, 75, 100, 125, 150, 175, 200	25, 50, 75, 100, 125, 150, 175, 200, 250, 300	25, 50, 75, 100, 125, 150, 200, 250, 300, 350, 400, 500		**-...**		
Spindle pitch [mm]	3	3	–		**-...P**		
	–	–	5				
	8	–	–				
	–	10	–				
	–	–	12				
Position sensing	Via proximity sensor				**-A**		-A
Motor type	Stepper motor ST				**-ST**		-ST
Controller	Integrated				**-M**		-M
Control panel	Integrated				**-H1**		-H1
Bus protocol/actuation	NPN and IO-Link				**-NLK**		
	PNP and IO-Link				**-PLK**		
End-position detection	With integrated end-position sensing				**-AA**		-AA
Cable outlet direction	Standard						
	Left				**-L**		
	Underneath				**-D**		
	Right				**-R**		
Electrical accessories	None						
	Adapter for operation as IO device				**+L1**		
Operating instructions	With operating instructions						
	Without operating instructions				**DN**		

Accessories

Profile mounting EAHF-L2-...-P-S
Material:
Anodised wrought aluminium alloy
RoHS-compliant

- For mounting the cylinder on the side of the profile

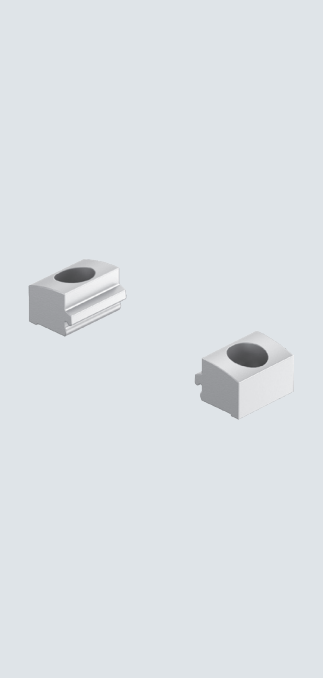

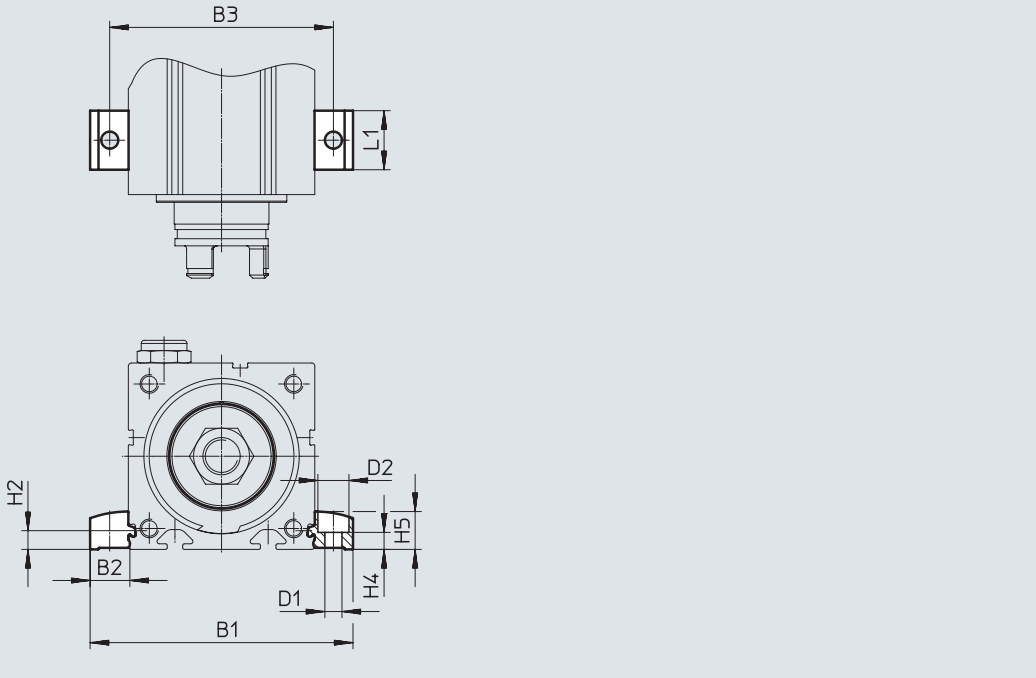

Dimensions and ordering data

For size	B1	B2	B3	D1 ø H13	D2 ø H13	H2
32	51.4	9.7	42	4.5	8	4.9
45	70.6	12.8	58	5.5	10	6.1
60	85.6	12.8	73	5.5	10	6.1

For size	H4 ±0.1	H5	L1	Weight [g]	Part no.	Type
32	4.2	9	19	4	**5183153**	**EAHF-L2-25-P-S**
45	5.5	12.2	19	6	**5184133**	**EAHF-L2-45-P-S**
60	5.5	12.2	19	6	**5184133**	**EAHF-L2-45-P-S**

Accessories

Profile mounting EAHF-L2-...-P
Material:
Anodised wrought aluminium alloy
RoHS-compliant

- For mounting the cylinder on the side of the profile.
  The profile mounting can be attached to the mounting surface using the drilled hole in the centre

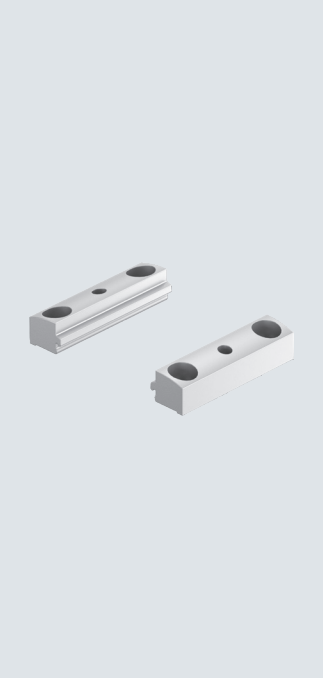

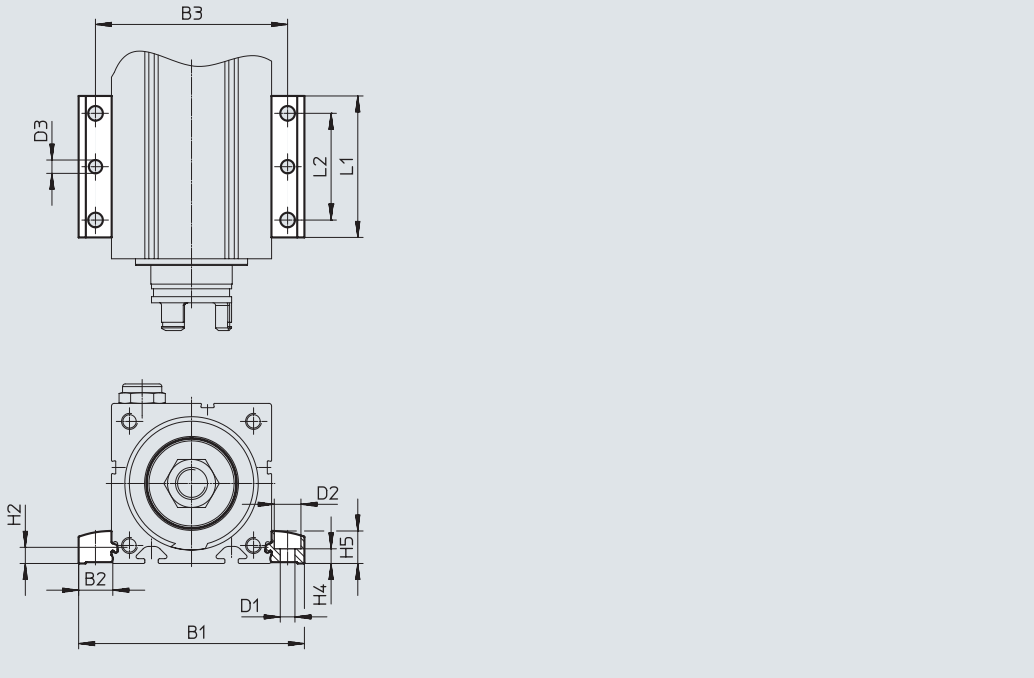

Dimensions and ordering data

For size	B1	B2	B3	D1 ø H13	D2 ø H13	D3 ø	H2
32	51.4	9.7	42	4.5	8	4	4.9
45	70.6	12.8	58	5.5	10	5	6.1
60	85.6	12.8	73	5.5	10	5	6.1

For size	H4 ±0.1	H5	L1	L2	Weight [g]	Part no.	Type
32	4.2	9	53	40	19	**4835684**	**EAHF-L2-25-P**
45	5.5	12.2	53	40	35	**4835728**	**EAHF-L2-45-P**
60	5.5	12.2	53	40	35	**4835728**	**EAHF-L2-45-P**

Accessories

Flange mounting EAHH

Material:
Galvanised steel
RoHS-compliant

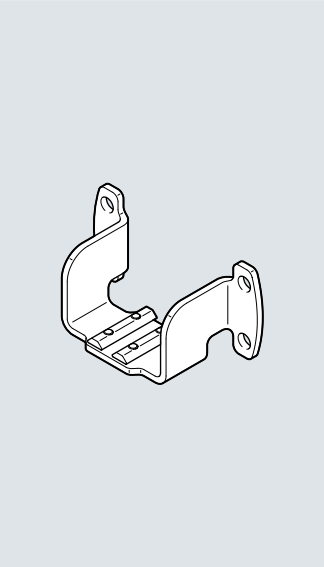

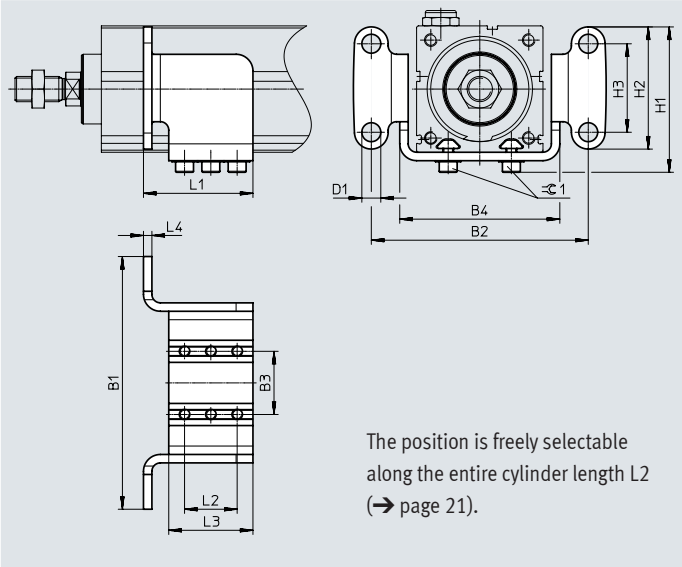

The position is freely selectable along the entire cylinder length L2 (➔ page 21).

Dimensions and ordering data

For size	B1	B2	B3 ±0.1	B4	D1 ⌀	H1	H2	H3	L1
32	70	58	16	42	5.5	39	31	20	38
45	100	85	24	61	6.6	54.5	48	35	42
60	120	103	30	76	9	69	58	42	52

For size	L2	L3	L4	⌯1	CRC[1]	Weight [g]	Part no.	Type
32	20	30	2.5	2.5	1	80	**5126157**	**EAHH-P2-32**
45	20	30	4	2.5	1	185	**5126669**	**EAHH-P2-45**
60	25	40	4	4	1	320	**5127005**	**EAHH-P2-60**

1) Corrosion resistance class CRC 1 to Festo standard FN 940070
Low corrosion stress. Dry indoor application or transport and storage protection. Also applies to parts behind coverings, in the non-visible interior area, and parts which are covered in the application (e.g. drive trunnions).

Accessories

Adapter kit EAHA

Material:
Galvanised steel

RoHS-compliant

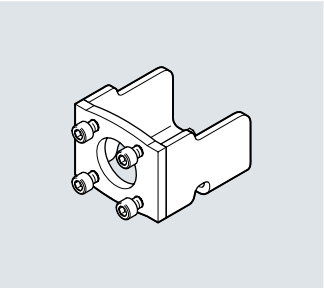

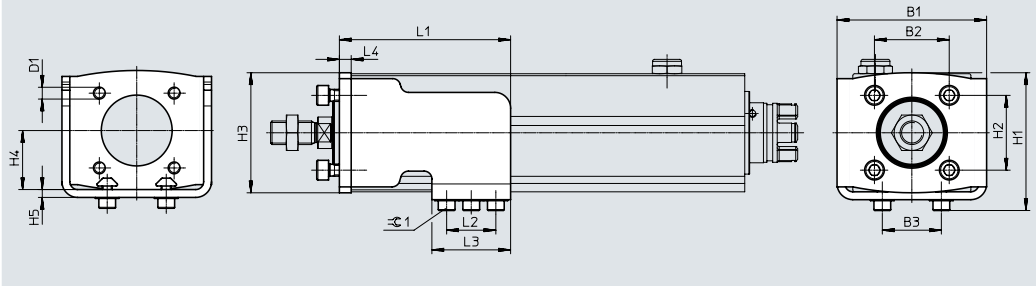

Dimensions and ordering data

For size	B1	B2 ±0.2	B3 ±0.1	D1	H1	H2 ±0.2	H3	H4	H5
32	53	22	16	M5	42	22	37	18	2.5
45	61	32.5	24	M6	54	32.5	49	22.5	4
60	76	38	30	M6	69.5	38	61	30	4

For size	L1	L2	L3	L4	=C1	CRC[1]	Weight [g]	Part no.	Type
32	64	20	30	4	2.5	1	165	**5173020**	**EAHA-P2-32**
45	68	20	30	6	2.5	1	340	**5172353**	**EAHA-P2-45**
60	87	25	40	6	4	1	560	**5173082**	**EAHA-P2-60**

1) Corrosion resistance class CRC 1 to Festo standard FN 940070
Low corrosion stress. Dry indoor application or transport and storage protection. Also applies to parts behind coverings, in the non-visible interior area, and parts which are covered in the application (e.g. drive trunnions).

Accessories

Swivel mounting EAHS

Material:
Galvanised steel
RoHS-compliant

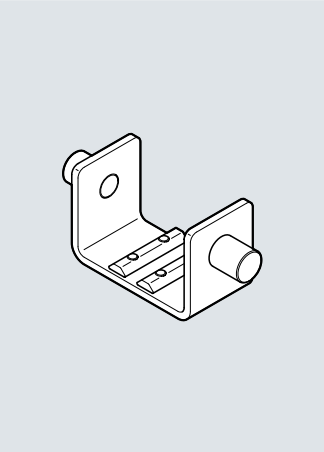

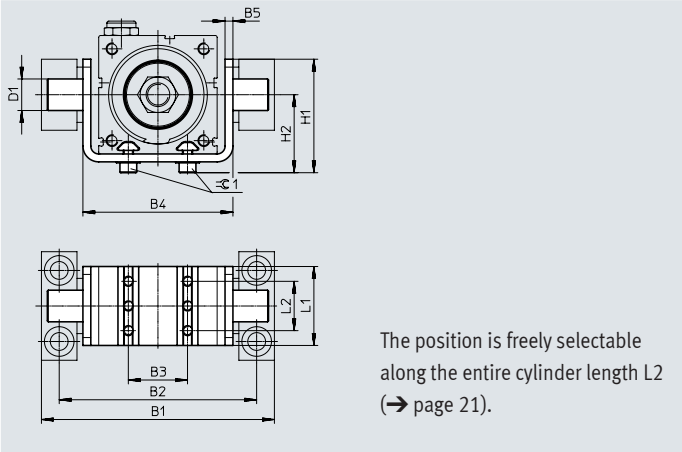

The position is freely selectable along the entire cylinder length L2 (➔ page 21).

Dimensions and ordering data

For size	B1	B2	B3 ±0.1	B4	B5	D1 ⌀ e9	H1
32	68	57	16	42	2.5	8	32
45	98	83	24	62	4	12	44.5
60	118	100	30	76	4	16	57

For size	H2	L1	L2	⌯1	CRC[1]	Weight [g]	Part no.	Type
32	23.5	30	20	2.5	1	75	**5125041**	**EAHS-P2-32**
45	29.5	30	20	2.5	1	165	**5125167**	**EAHS-P2-45**
60	39	40	25	4	1	305	**5125281**	**EAHS-P2-60**

1) Corrosion resistance class CRC 1 to Festo standard FN 940070
Low corrosion stress. Dry indoor application or transport and storage protection. Also applies to parts behind coverings, in the non-visible interior area, and parts which are covered in the application (e.g. drive trunnions).

Trunnion support LNZG

Material:
Trunnion support: Anodised aluminium
Plain bearing: Plastic
Copper/PTFE-free
RoHS-compliant

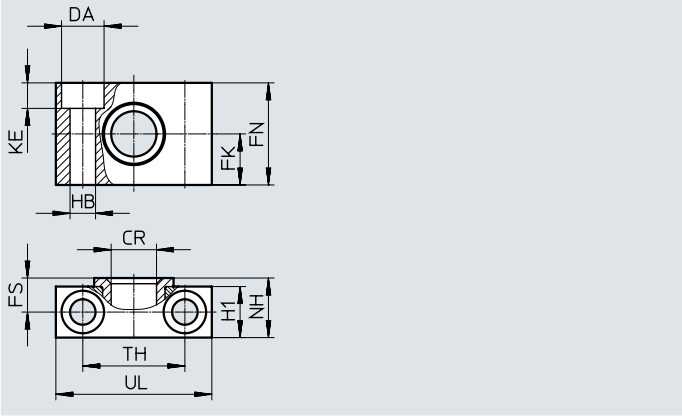

Dimensions and ordering data

For size	CR ⌀ D11	DA ⌀ H13	FK ⌀ ±0.1	FN	FS	H1	HB ⌀ H13	KE	NH	TH ±0.2	UL	CRC[1]	Weight [g]	Part no.	Type
32	8	8	10	20	7.5	11	4.5	4.6	13	20	30	2	26	**1434912**	**LNZG-16**
45	12	11	15	30	10.5	15	6.6	6.8	18	32	46	2	83	**32959**	**LNZG-32**
60	16	15	18	36	12	18	9	9	21	36	55	2	129	**32960**	**LNZG-40/50**

1) Corrosion resistance class CRC 2 to Festo standard FN 940070
Moderate corrosion stress. Indoor applications in which condensation can occur. External visible parts with primarily decorative surface requirements which are in direct contact with a normal industrial environment.

Accessories

Ordering data – Mounting components

Data sheets → Internet: clevis foot

Designation	For size	Part no.	Type
Right angle clevis foot LQG			
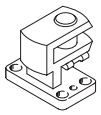	45	**31768**	**LQG-32**
	60	**31769**	**LQG-40**
Clevis foot LBN			
	32	**6059**	**LBN-20/25**
	45	**195860**	**LBN-32**
	60	**195861**	**LBN-40**

Designation	For size	Part no.	Type
Clevis foot LBG			
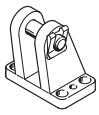	45	**31761**	**LBG-32**
	60	**31762**	**LBG-40**

Ordering data – Piston rod attachments

Data sheets → Internet: piston rod attachment

Designation	For size	Part no.	Type
Rod eye SGS			
	32	**9255**	**SGS-M8**
	45	**9261**	**SGS-M10x1.25**
	60	**9262**	**SGS-M12x1.25**
Self-aligning rod coupler FK			
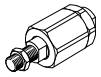	32	**2062**	**FK-M8**
	45	**6140**	**FK-M10x1.25**
	60	**6141**	**FK-M12x1.25**
Coupling piece KSG			
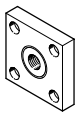	45	**32963**	**KSG-M10x1.25**
	60	**32964**	**KSG-M12x1.25**

Designation	For size	Part no.	Type
Rod clevis SG			
	32	**3111**	**SG-M8**
	45	**6144**	**SG-M10x1.25**
	60	**6145**	**SG-M12x1.25**
Rod clevis SGA			
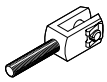	45	**32954**	**SGA-M10x1.25**
	60	**10767**	**SGA-M12x1.25**

Accessories

Sensor bracket EAPM-L2

Material:
Anodised wrought aluminium alloy
RoHS-compliant

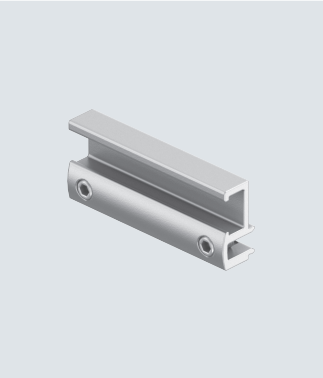

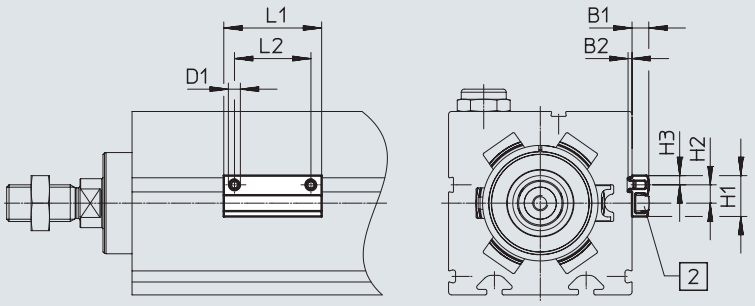

[2] Proximity sensor

Dimensions and ordering data

For size	B1	B2	D1	H1	H2
32, 45, 60	5.5	1.3	M4	13.4	6

For size	H3	L1	L2	Weight [g]	Part no.	Type
32, 45, 60	3	32	25	4	**4759852**	**EAPM-L2-SH**

Ordering data – Proximity sensors for T-slot, magneto-resistive

Data sheets → Internet: smt

	Type of mounting	Switching output	Electrical connection	Cable length [m]	Part no.	Type
N/O contact						
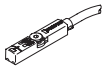	Insertable in the slot from above, flush with the cylinder profile, short design	PNP	Cable, 3-wire	2.5	**574335**	**SMT-8M-A-PS-24V-E-2.5-OE**
			Plug M8x1, 3-pin	0.3	**574334**	**SMT-8M-A-PS-24V-E-0.3-M8D**
		NPN	Cable, 3-wire	2.5	**574338**	**SMT-8M-A-NS-24V-E-2,5-OE**
			Plug M8x1, 3-pin	0.3	**574339**	**SMT-8M-A-NS-24V-E-0,3-M8D**
N/C contact						
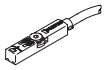	Insertable in the slot from above, flush with the cylinder profile, short design	PNP	Cable, 3-wire	7.5	**574340**	**SMT-8M-A-PO-24V-E-7.5-OE**
		NPN		2.5	**8138000**	**SMT-8M-A-NO-24V-E-2,5-OE**
				7.5	**8138001**	**SMT-8M-A-NO-24V-E-7,5-OE**

Ordering data – Connecting cables

Data sheets → Internet: nebu

	Electrical connection, left	Electrical connection, right	Cable length [m]	Part no.	Type
	Straight socket, M8x1, 3-pin	Cable, open end, 3-wire	2.5	**541333**	**NEBU-M8G3-K-2.5-LE3**
			5	**541334**	**NEBU-M8G3-K-5-LE3**
	Angled socket, M8x1, 3-pin	Cable, open end, 3-wire	2.5	**541338**	**NEBU-M8W3-K-2.5-LE3**
			5	**541341**	**NEBU-M8W3-K-5-LE3**

Accessories

Ordering data – IO-Link master USB

Data sheets → Internet: cdsu

	Description	Cable length [m]	Part no.	Type
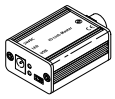	• For using the unit with IO-Link • An external power supply plug is additionally required (not included in the scope of delivery)	0.3	**8091509**	**CDSU-1**

Ordering data – Adapter

Data sheets → Internet: nefc

	Electrical connection, left	Electrical connection, right	Cable length [m]	Part no.	Type
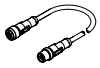	Straight socket, M12x1, 8-pin	• Straight plug, M12x1, 5-pin • Only for use with IO-Link Port Class A Master (recommended)	0.3	**8080777**	**NEFC-M12G8-0.3-M12G5-LK**

Ordering data – Supply cables

Data sheets → Internet: nebl

	Electrical connection, left	Electrical connection, right	Cable length [m]	Part no.	Type
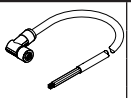	Angled socket, M12x1, 4-pin	Cable, open end, 4-wire	2	**8080778**	**NEBL-T12W4-E-2-N-LE4**
			5	**8080779**	**NEBL-T12W4-E-5-N-LE4**
			10	**8080780**	**NEBL-T12W4-E-10-N-LE4**
			15	**8080781**	**NEBL-T12W4-E-15-N-LE4**
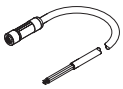	Straight socket, M12x1, 4-pin	Cable, open end, 4-wire	2	**8080790**	**NEBL-T12G4-E-2-N-LE4**
			5	**8080791**	**NEBL-T12G4-E-5-N-LE4**
			10	**8080792**	**NEBL-T12G4-E-10-N-LE4**
			15	**8080793**	**NEBL-T12G4-E-15-N-LE4**

Ordering data – Connecting cables

Data sheets → Internet: nebc

	Electrical connection, left	Electrical connection, right	Cable length [m]	Part no.	Type
	Angled socket, M12x1, 8-pin	Cable, open end, 8-wire	2	**8094476**	**NEBC-M12W8-E-2-N-B-LE8**
			5	**8094478**	**NEBC-M12W8-E-5-N-B-LE8**
			10	**8094481**	**NEBC-M12W8-E-10-N-B-LE8**
			15	**8094479**	**NEBC-M12W8-E-15-N-B-LE8**
		Straight plug, M12x1, 8-pin	2	**8080786**	**NEBC-M12W8-E-2-N-M12G8**
			5	**8080787**	**NEBC-M12W8-E-5-N-M12G8**
			10	**8080788**	**NEBC-M12W8-E-10-N-M12G8**
			15	**8080789**	**NEBC-M12W8-E-15-N-M12G8**
	Straight socket, M12x1, 8-pin	Cable, open end, 8-wire	2	**8094480**	**NEBC-M12G8-E-2-N-B-LE8**
			5	**8094477**	**NEBC-M12G8-E-5-N-B-LE8**
			10	**8094482**	**NEBC-M12G8-E-10-N-B-LE8**
			15	**8094475**	**NEBC-M12G8-E-15-N-B-LE8**
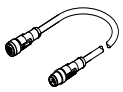		Straight plug, M12x1, 8-pin	2	**8080782**	**NEBC-M12G8-E-2-N-M12G8**
			5	**8080783**	**NEBC-M12G8-E-5-N-M12G8**
			10	**8080784**	**NEBC-M12G8-E-10-N-M12G8**
			15	**8080785**	**NEBC-M12G8-E-15-N-M12G8**

Note
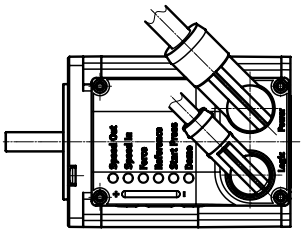
The angled cables are positioned at a 45° angle to the axis.