Spindle axis units ELGS-BS-KF

This product is also available as a modular mechanical system
Spindle axis ELGC-BS-KF

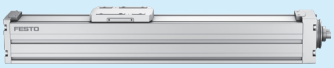

Key features

At a glance
Plug and work with the Simplified Motion Series

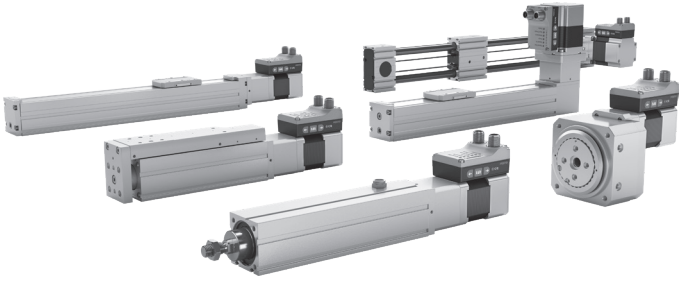

The simplicity of pneumatics is now combined for the first time with the advantages of electric automation thanks to the Simplified Motion Series. These integrated drives are the perfect solution for all users who are looking for an electric alternative for very simple movement and positioning tasks between two mechanical end positions, but don't want the commissioning process for traditional electric drive systems that can often be quite complex.

IO-Link

There is no need for any software since operation is simply based on the "plug and work" principle. Digital I/O (DIO) and IO-Link are always automatically included – a product with two types of control as standard.

Integrated

The integrated electronics in the drive are at the core of the Simplified Motion Series.

Simple

For commissioning, simply set all relevant parameters directly on the drive:

- Speed and force
- Reference end position and cushioning
- Manual operation

Standardised

Electrical connection via M12 plug design

- Power (4-pin): power supply for the motor
- Logic (8-pin): control signal, sensor signal and power for the integrated electronics

Connected

Use of extended functions via IO-Link:

- Motion parameters can be set remotely
- Copy and backup function for transferring parameters
- Read function for extended process parameters

The functions of the Simplified Motion Series

Basic profile for movement between two end positions:
with speed control

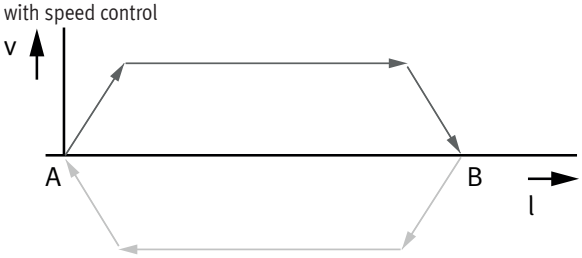

Extended motion profile for simplified press-fitting and clamping functions:
with speed and force control

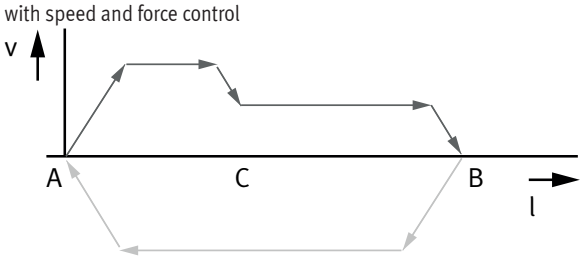

- These drives are designed for simple movements between two end positions.
- Proximity switches are required in order to implement any intermediate positions.

The products in the Simplified Motion Series

Spindle axis unit
ELGS-BS-KF

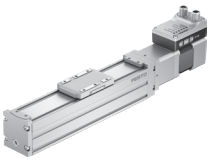

Mini slide unit
EGSS-BS-KF

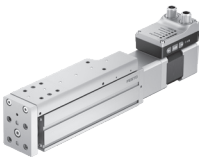

Electric cylinder unit
EPCS

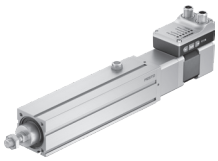

Toothed belt axis unit
ELGS-TB-KF

Toothed belt axis unit
ELGE

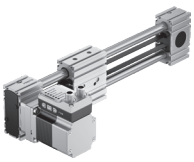

Rotary drive unit
ERMS

Key features

At a glance

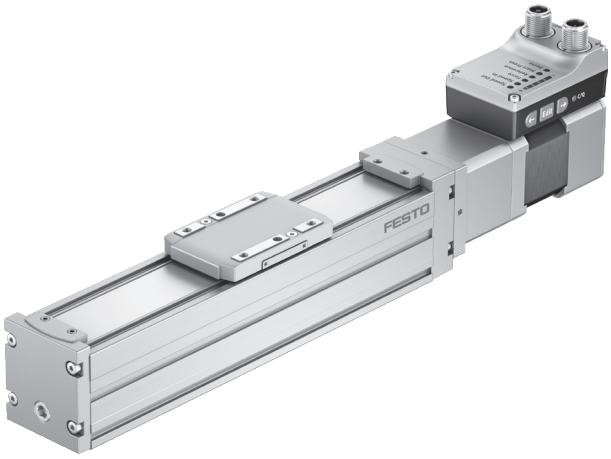

- Without external servo drive: all the necessary electronic components are combined in the integrated drive
- Two control options integrated as standard: digital I/O and IO-Link
- Complete solution for simple movements between two mechanical end positions
- Protected against external influences by internal guide
- Simplified commissioning: all parameters can be manually set directly on the drive
- No special expertise required for commissioning
- End position feedback similar to that of a conventional proximity switch is integrated as standard
- Clean Look design: easy to clean and less prone to contamination

Modular and flexible with motor, motor mounting kit and servo drive

This product is also available as a modular mechanical system as spindle axis ELGC-BS-KF:

When to compact dimensions and optimised installation space are important, e.g. in assembly systems, test and inspection systems, small parts handling, the electronics industry and desktop applications. Either as an individual axis or as a handling system.

- Compact: optimum ratio of installation space to working space
- Unique: "one-size-down" mounting system
- Modular: individual combinations with motor, motor mounting kit and servo drive
- Flexible: wide range of mounting options for optimum machine integration

Typical handling systems

For applications where compact dimensions are essential, the axes ELGC can be combined into very space-saving handling systems that are suitable for assembly systems, test and inspection systems, small parts handling, the electronics industry and desktop applications. The very compact linear axes ELGC, mini slide EGSC and electric cylinder EPCC offer an optimal ratio between installation space and working space. They feature a common system approach and platform architecture and the connections are largely adapterless.

Cantilever system

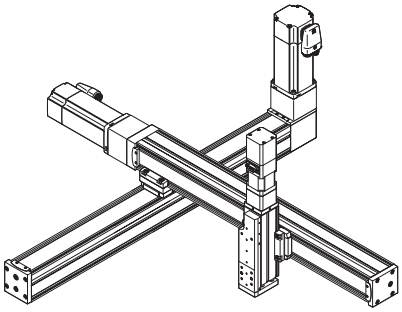

Planar surface gantry

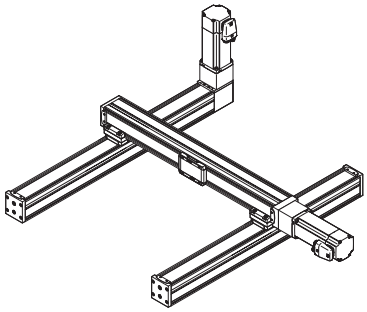

Three-dimensional gantry

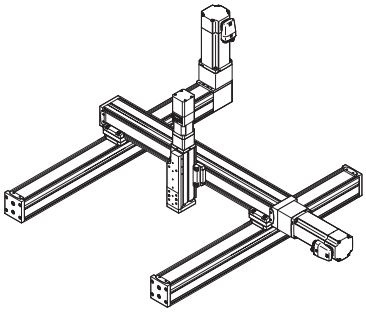

Key features

Matrix showing combinations between axis ELGC/ELGS-TB, ELGC/ELGS-BS, mini slide EGSC/EGSS-BS, electric cylinder EPCC/EPCS-BS and guide axis ELFC

Mounting options with profile mounting and via angle kit

		Assembly axis ELGC-BS/-TB; ELFC; EGSC-BS; EPCC-BS; ELGS-BS/-TB; EGSS-BS, EPCS-BS			
	Size	25	32	45	60
Base axis ELGC-BS/-TB; ELFC; ELGS-BS/-TB	32	■	–	–	–
	45	–	■	–	–
	60	–	–	■	–
	80	–	–	–	■

With profile mounting EAHF-L2-...-P-D...

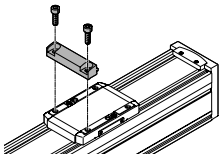

- Mounting option: base axis with one-size-down assembly axis

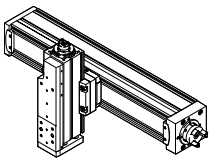

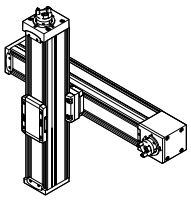

With angle kit EHAA-D-L2-...-AP

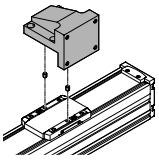

- Mounting option: base axis rotated through 90° with one-size-down assembly axis

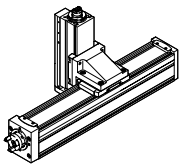

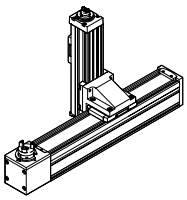

Matrix showing combinations between axis ELGC/ELGS-TB, ELGC/ELGS-BS, mini slide EGSC/EGSS-BS, electric cylinder EPCC/EPCS-BS and guide axis ELFC

Assembly options with adapter kit or direct mounting

		Assembly axis ELGC-BS/-TB; ELFC; EGSC-BS; EPCC-BS; ELGS-BS/-TB; EGSS-BS, EPCS-BS				
	Size	25	32	45	60	80
Base axis ELGC-BS/-TB; ELFC; ELGS-BS/-TB	32	■		–	–	–
	45	–	■		–	–
	60	–	–	■		–
	80	–	–	–	■	

		Assembly axis EGSC-BS; EGSS-BS			
	Size	25	32	45	60
Base axis EGSC-BS; EGSS-BS	25	■	–	–	–
	32	–	■	–	–
	45	–	–	■	–
	60	–	–	–	■

With adapter kit EHAA-D-L2

- Mounting option: base axis with the same size assembly axis
- Mounting option: base axis with height adjustment for one-size-down assembly axis
- When motors are mounted using parallel kits, this may lead to interfering contours. In this case, the adapter plate is required for height compensation

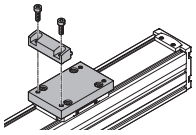

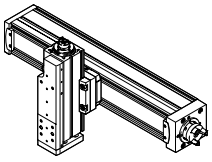

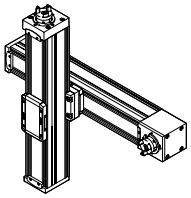

With direct mounting

- Mounting option: base axis with the same size assembly axis

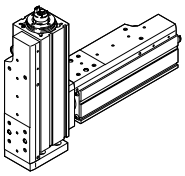

Type codes

001	Series	
ELGS	Gantry axis	

002	Drive system	
BS	Ball screw drive	

003	Guide	
KF	Recirculating ball bearing guide	

004	Size	
32	32	
45	45	
60	60	

005	Stroke	
100	100	
200	200	
300	300	
400	400	
500	500	
600	600	
800	800	

006	Spindle pitch	
8P	8 mm	
10P	10 mm	
12P	12 mm	

007	Motor type	
ST	Stepper motor ST	

008	Controller	
M	Integrated	

009	Control panel	
H1	Integrated	

010	Bus protocol/activation	
PLK	PNP and IO-Link®	
NLK	NPN and IO-Link®	

011	End-position sensing	
AA	With integrated end-position sensing	

012	Cable outlet direction	
	Standard	
D	Underneath	
F	Front	
B	Rear	

013	Electrical accessories	
	None	
L1	Adapter for operation as IO-Link® device	

014	Operating instructions	
	With operating instructions	
DN	Without operating instructions	

Peripherals overview

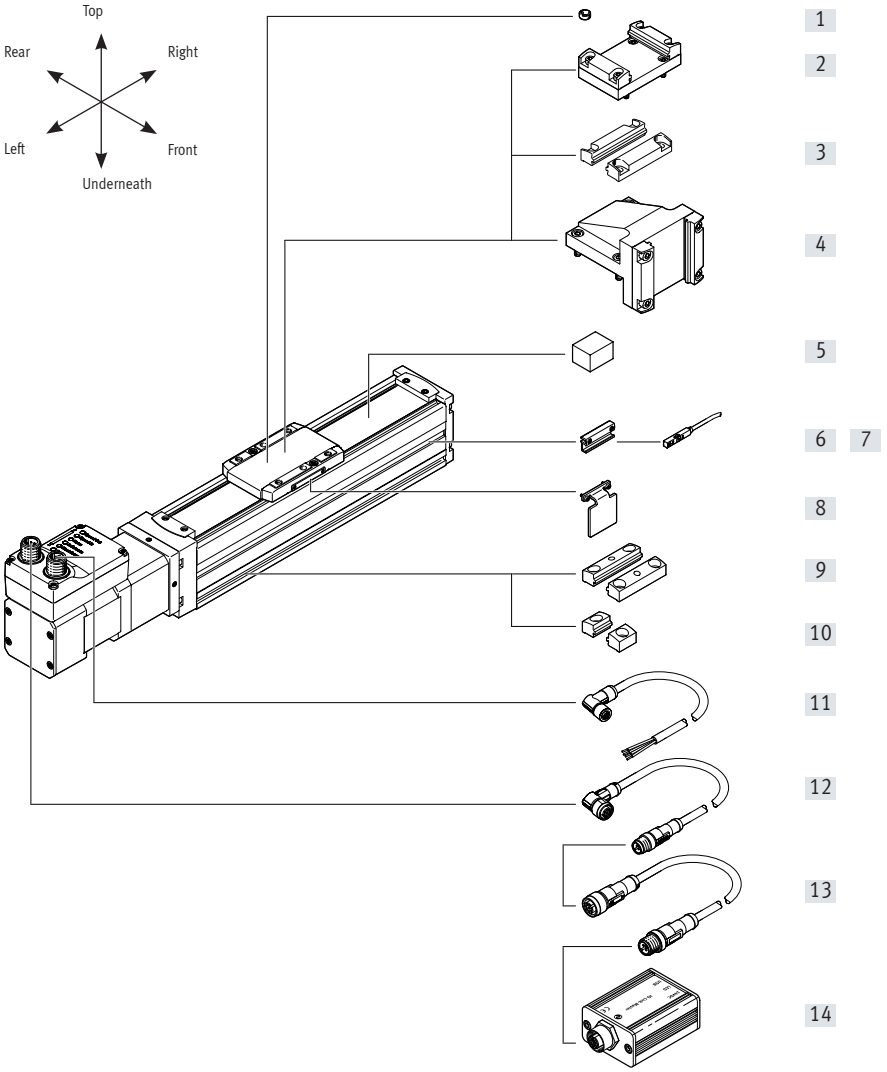

Motor attachment variants

Standard	[D] Underneath	[B] Rear	[F] Front

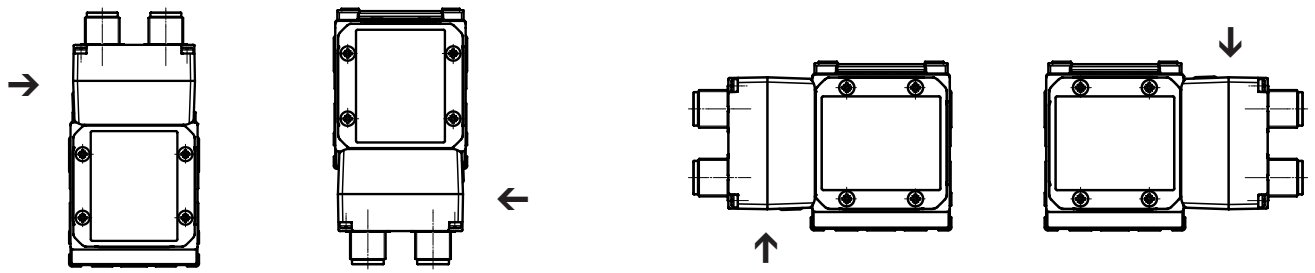

Control elements

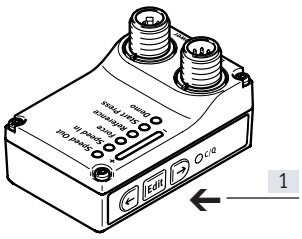

[1] Pushbutton actuators for parameterisation and control

Peripherals overview

Accessories

	Type/order code	Description	→ Page/Internet
[1]	Centring pin/sleeve ZBS, ZBH	For centring loads and attachments on the slide	30
[2]	Adapter kit EHAA-D-L2	• For axis/axis mounting with adapter plate • Mounting option: base axis with the same size or one-size-down assembly axis • When motors are mounted using parallel kits, this may lead to interfering contours. In this case, the adapter plate is required for height compensation (download CAD data → www.festo.com)	27
[3]	Profile mounting EAHF-L2-...-P-D	• For axis/axis mounting without adapter plate • Mounting option: base axis with one-size-down assembly axis	26
[4]	Angle kit EHAA-D-L2-...-AP	• For mounting one-size-down vertical axes (assembly axes) on • base axes with mounting position "slide at top"	28
[5]	Clamping component EADT-S-L5-32	• Tool for retensioning the cover strip	30
[6]	Sensor bracket[1)] EAPM-L2-SH	For mounting the proximity switches on the axis. The proximity switches can only be mounted using the sensor bracket	29
[7]	Proximity switch[1)] SIES-8M	Inductive proximity switch, for T-slot	30
	Proximity switch[1)] SMT-8M	Magnetic proximity switch, for T-slot	30
[8]	Switch lug[1)] EAPM-...-SLS	For sensing the slide position in conjunction with inductive proximity switches SIES-8M	29
[9]	Profile mounting EAHF-L2-...-P	For mounting the axis on the side of the profile. The profile mounting can be attached to the mounting surface using the drill hole in the centre	25
[10]	Profile mounting EAHF-L2-...-	For mounting the axis on the side of the profile	24
[11]	Supply cable NEBL-T12	For connecting load and logic supply	31
[12]	Connecting cable NEBC-M12	For connection to a controller	31
[13]	Adapter NEFC-M12G8	• Connection between the motor and the and IO-Link master • Only for use with IO-Link Port Class A Master (recommended)	31
[14]	IO-Link master USB CDSU-1	For straightforward use of the mini slide unit via IO-Link	31

1) Proximity switches are optional and only required in order to sense any intermediate positions.

Data sheet

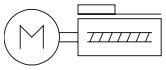

- Ø - Size
  32 ... 60
- l - Stroke length
  100 ... 800 mm

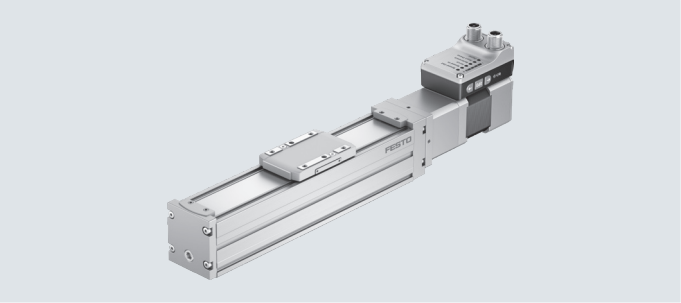

General technical data				
Size		32	45	60
Design		Electromechanical axis with ball screw and integrated drive		
Motor type		Stepper motor		
Guide		Recirculating ball bearing guide		
Mounting position		Any		
Working stroke	[mm]	100, 200, 300, 400, 500, 600, 800	100, 200, 300, 400, 500, 600, 800	100, 200, 300, 400, 500, 600, 800
Stroke reserve	[mm]	0		
Additional functions		Integrated end-position sensing		
		User interface		
Display		LED		
Homing		Positive fixed stop block		
		Negative fixed stop block		
Type of mounting		With female thread		
		With accessories		
		With centring pin, centring sleeve		
Max. line length				
Inputs/outputs	[m]	15		
IO-Link operation	[m]	20		

Mechanical data				
Size		32	45	60
Max. payload				
Horizontal	[kg]	2	10	20
Vertical	[kg]	2	5	13
Max. feed force F_x	[N]	40	100	200
Max. speed[1)]	[m/s]	0.18	0.25	0.25
Speed press	[m/s]	0.01		
Max. acceleration	[m/s²]	5		
Repetition accuracy	[mm]	±0.015	±0.015	±0.01
Reversing backlash	[mm]	≤ 0.15		
Position sensing		For proximity switch		
		Via IO-Link		

1) Rotational speed and speed are stroke-dependent

Data sheet

Spindle				
Size		32	45	60
Diameter	[mm]	8	10	12
Pitch	[mm/rev.]	8	10	12

Electrical data				
Size		32	45	60
Motor				
Nominal voltage DC	[V]	24 (±15%)		
Nominal current	[A]	3	3	5.3
Max. current consumption (load)	[A]	3	3	5.3
Max. current consumption (logic)	[mA]	300		
Encoder				
Rotor position encoder		Absolute encoder, single turn		
Rotor position sensor measuring principle		Magnetic		
Rotor position encoder resolution	[bit]	16		

Interfaces				
Size		32	45	60
Parameterisation interface				
IO-Link		Yes		
User interface		Yes		
Digital inputs				
Number		2		
Switching logic		PNP		
		NPN		
Properties		Not galvanically isolated		
		Configurable		
Specification		Based on IEC 61131-2, type 1		
Working area	[V]	24		
Digital outputs				
Number		2		
Switching logic		PNP		
		NPN		
Rotor position encoder		Absolute encoder, single turn		
Properties		Not galvanically isolated		
		Configurable		
Max. current	[mA]	100		

Data sheet

Technical data – IO-Link				
Size		32	45	60
SIO-mode support		Yes		
Communication mode		COM3 (230.4 kBaud)		
Connection technology		Plug		
Port class		A		
Number of ports		1		
Process data width OUT	[bytes]	2		
Process data content OUT	[bit]	1 (Move in)		
	[bit]	1 (Move out)		
	[bit]	1 (Quit Error)		
Process data width IN	[bytes]	2		
Process data content IN	[bit]	1 (State Device)		
	[bit]	1 (State Move)		
	[bit]	1 (State in)		
	[bit]	1 (State out)		
Service data contents IN	[bit]	32 (Force)		
	[bit]	32 (Position)		
	[bit]	32 (Speed)		
Minimum cycle time	[ms]	1		
Data memory required	[Kilobyte]	0.5		
Protocol version		Device V 1.1		

Operating and environmental conditions				
Size		32	45	60
Insulation class		B		
Ambient temperature	[°C]	0 ... +50		
Storage temperature	[°C]	–20 ... +60		
Note on ambient temperature		Above an ambient temperature of 30°C, the power must be reduced by 2% per K		
Temperature monitoring		Switch-off for excessive temperature		
		Integrated precise CMOS temperature sensor with analogue output		
Relative humidity	[%]	0 ... 90		
Protection class		III		
Degree of protection		IP40		
Duty cycle	[%]	100		
CE marking		To EU EMC Directive		
		To EU RoHS Directive		
KC mark		KC-EMV		
Certification		RCM compliance mark		
Vibration resistance		Transport application check with severity level 1 to FN 942017-4 and EN 61800-2 and EN 61800-5-1		
Shock resistance		Shock test with severity level 1 to FN 942017-5 and EN 61800-2		
Maintenance interval		Life-time lubrication		

Weight				
Size		32	45	60
Basic weight with 0 mm stroke	[g]	889	1354	2862
Additional weight per 10 mm stroke	[g]	18	36	51
Moving mass at 0 mm stroke	[g]	83.4	220	525

Data sheet

Materials

Sectional view

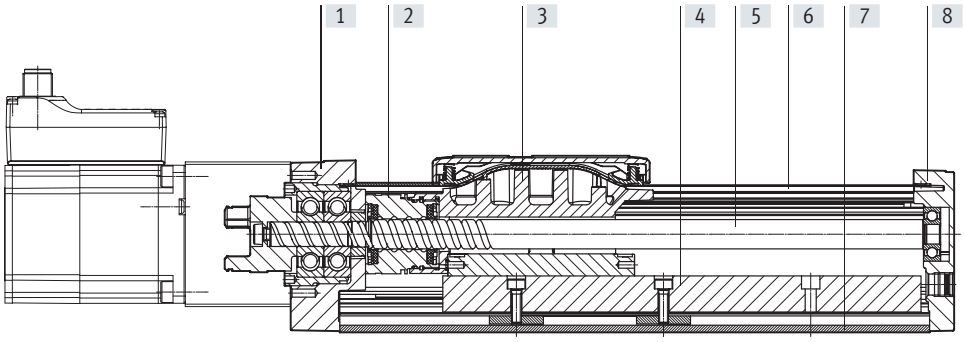

Axis		
[1]	Drive cover	Painted die-cast aluminium
[2]	Spindle nut	Steel
[3]	Slide	Die-cast aluminium
[4]	Guide	Steel
[5]	Spindle	Steel
[6]	Cover strip	High-alloy stainless steel
[7]	Profile	Anodised wrought aluminium alloy
[8]	End cap	Painted die-cast aluminium
	Note on materials	RoHS-compliant
		Contains paint-wetting impairment substances

Pin allocation

Power supply

Plug

M12x1, 4-pin, T-coded to EN 61076-2-111

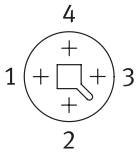

Pin	Function
1	Power supply (24 V DC)
2	Reference potential, power supply (GND)
3	Reserved, do not connect
4	Functional earth (FE)

Logic interface

Plug

M12x1, 8-pin, A-coded to EN 61076-2-101

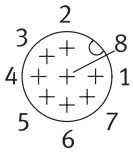

When used with digital I/O

Pin	Function
1	Logic power supply (24 V DC)
2	Digital output 1 (State "In")
3	Digital output 2 (State "Out")
4	Reference potential, logic power supply (GND)
5	Digital input 1 (Move "In")
6	Digital input 2 (Move "Out")
7	Reserved, do not connect
8	Reference potential, logic power supply (GND)

When used with I/O-Link

Pin	Function
1	L+ IO-Link power supply (24 V DC)
2	Reserved, do not connect
3	C/Q communication with the IO-Link master
4	L – Reference potential, IO-Link power supply (0 V)
5	Reserved, do not connect
6	Reserved, do not connect
7	Reserved, do not connect
8	L – Reference potential, IO-Link power supply (0 V)

Data sheet

Characteristic load values

The indicated forces and torques refer to the centre of the guide. The point of application of force is the point where the centre of the guide and the longitudinal centre of the slide intersect. These values must not be exceeded during dynamic operation. Special attention must be paid to the deceleration phase.

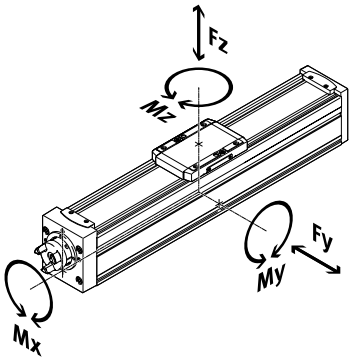

Distance from the slide surface to the centre of the guide

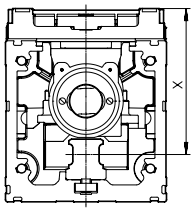

Max. permissible forces and torques on the slide (strength limits)

Size		32	45	60
$Fy_{max.}$	[N]	150	300	600
$Fz_{max.}$	[N]	300	600	1800
$Mx_{max.}$	[Nm]	1.3	5.5	29.1
$My_{max.}$	[Nm]	1.1	4.7	31.8
$Mz_{max.}$	[Nm]	1.1	4.7	31.8

Distance from the slide surface to the centre of the guide

Size		32	45	60
Dimension x	[mm]	31.4	42.8	54.6

Max. permissible forces and torques for the bearing calculation, for a service life of 5000 km or 5 x 10^6 cycles

Size		32	45	60
$Fy_{max.}$	[N]	356	880	3641
$Fz_{max.}$	[N]	356	880	3641
$Mx_{max.}$	[Nm]	1.3	5.5	29.1
$My_{max.}$	[Nm]	1.1	4.7	31.8
$Mz_{max.}$	[Nm]	1.1	4.7	31.8

Note

For a guide system to have a service life of 5000 km, the load comparison factor must have a value of fv ≤ 1, based on the maximum permissible forces and torques for a service life of 5000 km.
This formula can be used to calculate a guide value.
The engineering software "PositioningDrives" is available for more precise calculations ➔ www.festo.com

If the axis is subjected to two or more of the indicated forces and torques simultaneously, the following equation must be satisfied in addition to the indicated maximum loads:

Calculating the load comparison factor:

$$f_v = \frac{|F_{y1}|}{F_{y2}} + \frac{|F_{z1}|}{F_{z2}} + \frac{|M_{x1}|}{M_{x2}} + \frac{|M_{y1}|}{M_{y2}} + \frac{|M_{z1}|}{M_{z2}} \leq 1$$

F_1/M_1 = dynamic value
F_2/M_2 = maximum value

Data sheet

Calculating the service life

The service life of the guide depends on the load. To be able to make a statement as to the service life of the guide, the graph below plots the load comparison factor fv against the service life.

These values are only theoretical. You must consult your local Festo contact for a load comparison factor fv greater than 1.

Load comparison factor fv as a function of service life l

Example:
A user wants to move an x kg load. Using the formula (→ page 12) gives a value of 1.5 for the load comparison factor fv. According to the graph, the guide has a service life of approx. 1500 km. Reducing the acceleration reduces the My and Mz values. A load comparison factor fv of 1 now gives a service life of 5000 km.

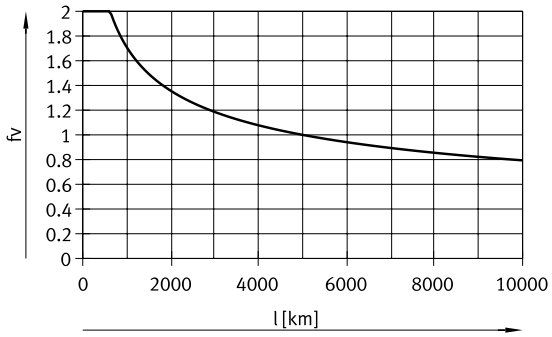

Comparison of the characteristic load values for 5000 km with dynamic forces and torques of recirculating ball bearing guides

The characteristic load values of bearing guides are standardised to ISO and JIS using dynamic and static forces and torques. These forces and torques are based on an expected service life of the guide system of 100 km according to ISO or 50 km according to JIS.
As the characteristic load values are dependent on the service life, the maximum permissible forces and torques for a 5000 km service life cannot be compared with the dynamic forces and torques of bearing guides to ISO/JIS.

To make it easier to compare the guide capacity of linear axes ELGS with bearing guides, the table below lists the theoretically permissible forces and torques for a calculated service life of 100 km. This corresponds to the dynamic forces and torques to ISO.
These 100 km values have been calculated mathematically and are only to be used for comparing with dynamic forces and torques to ISO. The drives must not be loaded with these characteristic values as this could damage the axes.

Max. permissible forces and torques for a theoretical service life of 100 km (from a guide perspective only)

Size		32	45	60
$Fy_{max.}$	[N]	1310	3240	13400
$Fz_{max.}$	[N]	1310	3240	13400
$Mx_{max.}$	[Nm]	5	20	107
$My_{max.}$	[Nm]	4	17	117
$Mz_{max.}$	[Nm]	4	17	117

Service life of the motor

The service life of the motor at nominal power is 20000 h.

Data sheet

Sizing example

Application data:

- Payload: 8 kg
- Mounting position: horizontal
- Stroke: 400 mm
- Max. permitted positioning time: 4 s (one direction)

Step 1: Selection of the possible size from the table ➔ page 8

Mechanical data				
Size		32	45	60
Max. payload				
Horizontal	[kg]	2	10	20
Vertical	[kg]	2	5	13

➔ Smallest possible size: ELGS-BS-KF-45

Step 2: Selection of max. speed level v for payload m

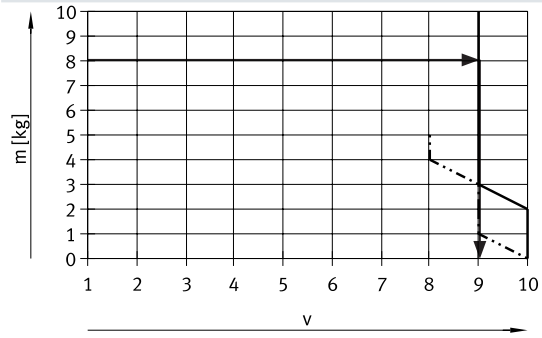

➔ Max. speed level for payload: level 9

Step 3: Reading off the min. positioning time t for stroke l

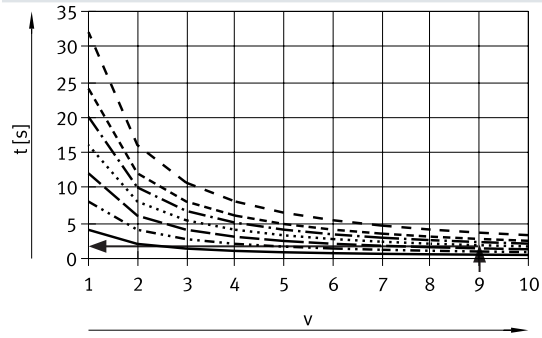

➔ Min. positioning time for 400 mm at level 9: 2 s

Result

The application can be implemented using ELGS-BS-KF-45-400. A minimum positioning time (one direction) of 2 s is achieved. Longer positioning times can be selected at any time using a lower speed level.

Data sheet

Mass m as a function of speed level v

Size 32

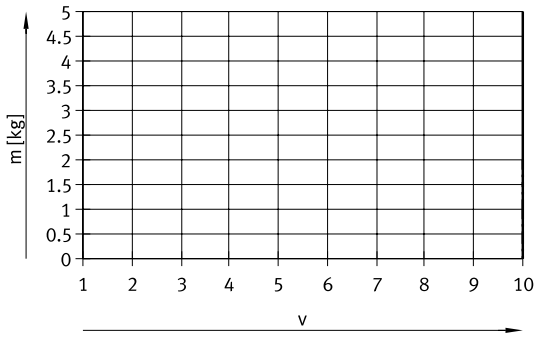

Size 45

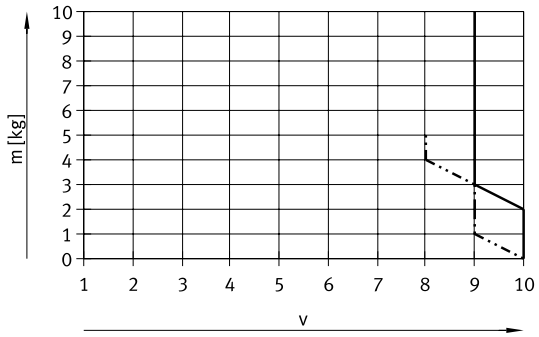

Size 60

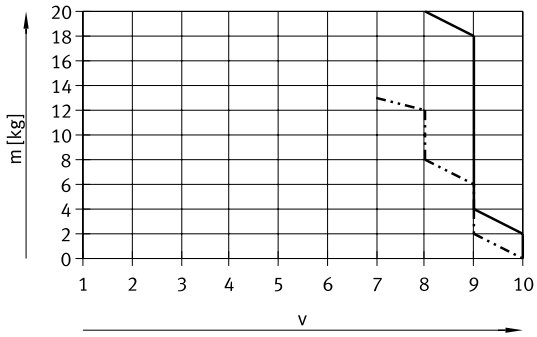

Note:
The lines represent the maximum values. The lower speed levels can be set at any time.

Horizontal
Vertical

Positioning time t as a function of speed level v and stroke l

Size 32

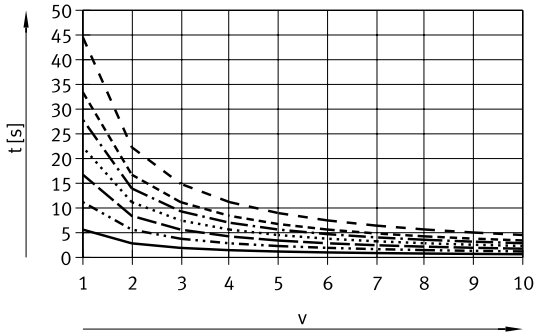

l = 100 mm
l = 200 mm
l = 300 mm
l = 400 mm
l = 500 mm
l = 600 mm
l = 800 mm

Size 45

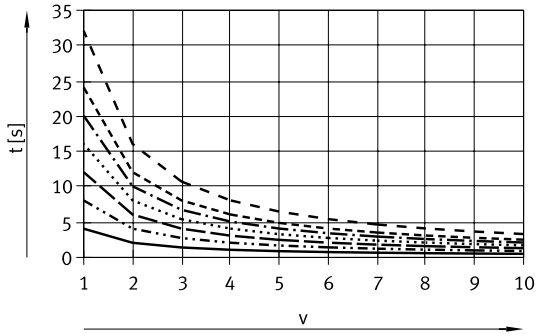

l = 100 mm
l = 200 mm
l = 300 mm
l = 400 mm
l = 500 mm
l = 600 mm
l = 800 mm

Data sheet

Positioning time t as a function of speed level v and stroke l

Size 60

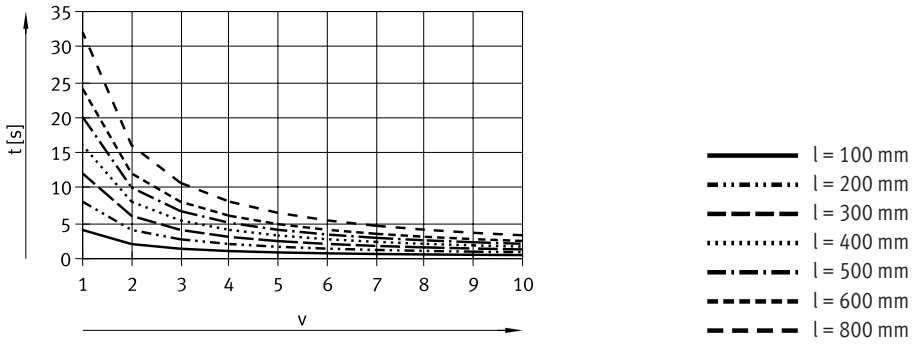

Feed force F as a function of force level F1

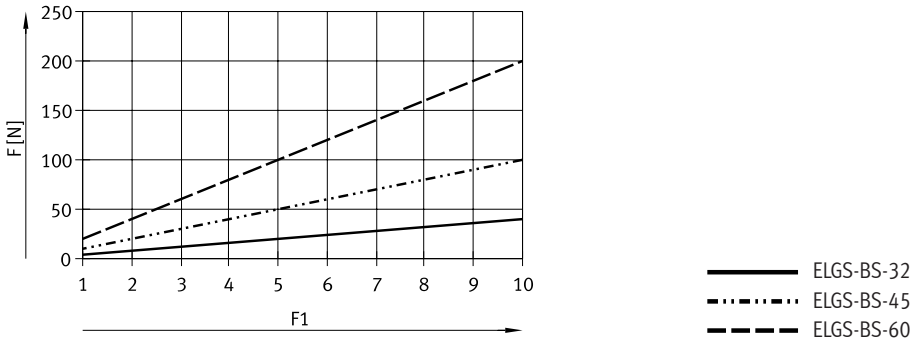

Feed force F as a function of service life l

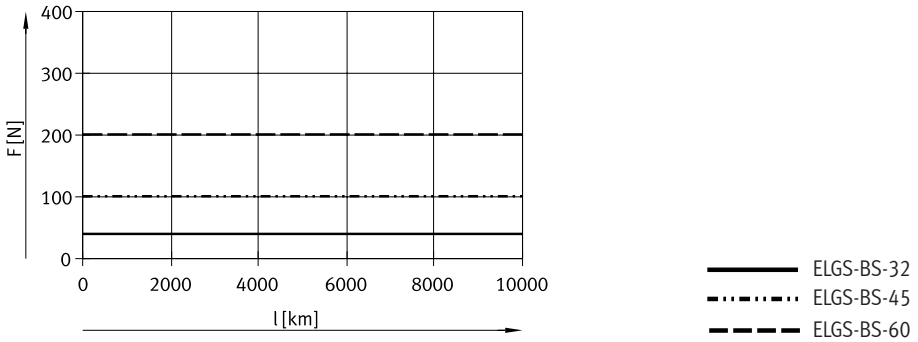

2nd moment of area

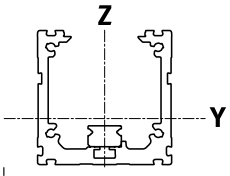

Size		32	45	60
Iy	[mm⁴]	$38x10^3$	$140x10^3$	$441x10^3$
Iz	[mm⁴]	$45x10^3$	$170x10^3$	$542x10^3$

Recommended deflection limits

Adherence to the following deflection limits is recommended so as not to impair the functional performance of the axes. Greater deformation can result in increased friction, greater wear and reduced service life.

Size	Dynamic deflection (moving load)	Static deflection (stationary load)
32 … 60	0.05% of the axis length, max. 0.5 mm	0.1% of the axis length

Data sheet

Dimensions – With motor

Download CAD data ➔ www.festo.com

Size 32/45/60

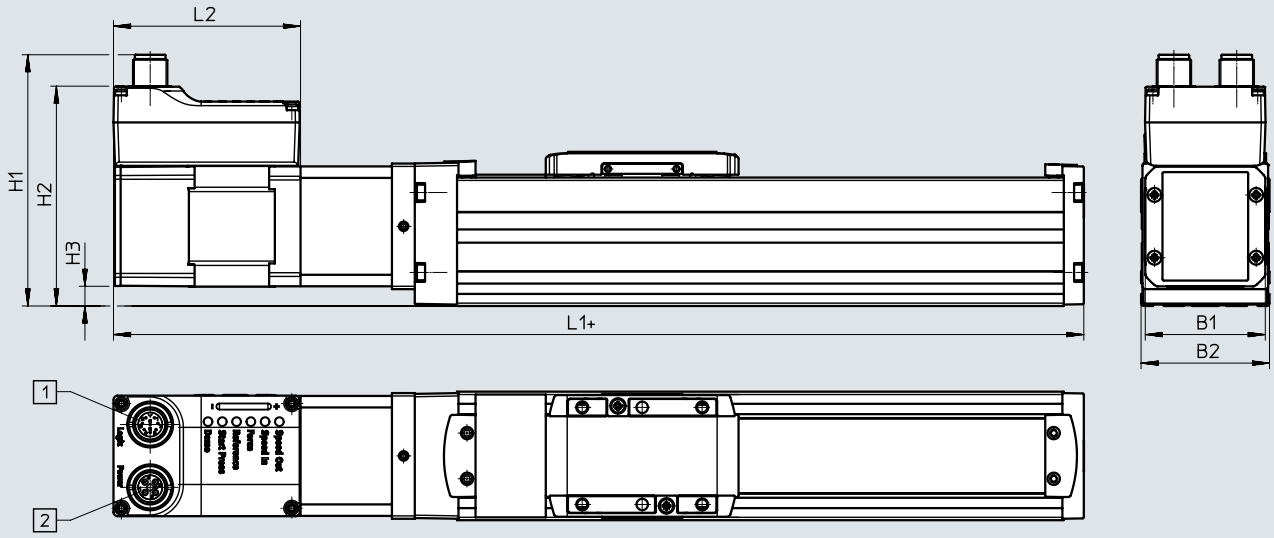

[1] Connection to logic interface
[2] Connection to power supply
\+ = plus stroke length

Size	B1	B2	H1	H2	H3	L1	L2
32	42.3	32	81.2	70	1.2	211	65
45	42.3	45	88	76.8	6.8	240.8	65
60	56.6	60	107.3	96.1	10.5	287	73.5

Data sheet

Dimensions Download CAD data ➔ www.festo.com

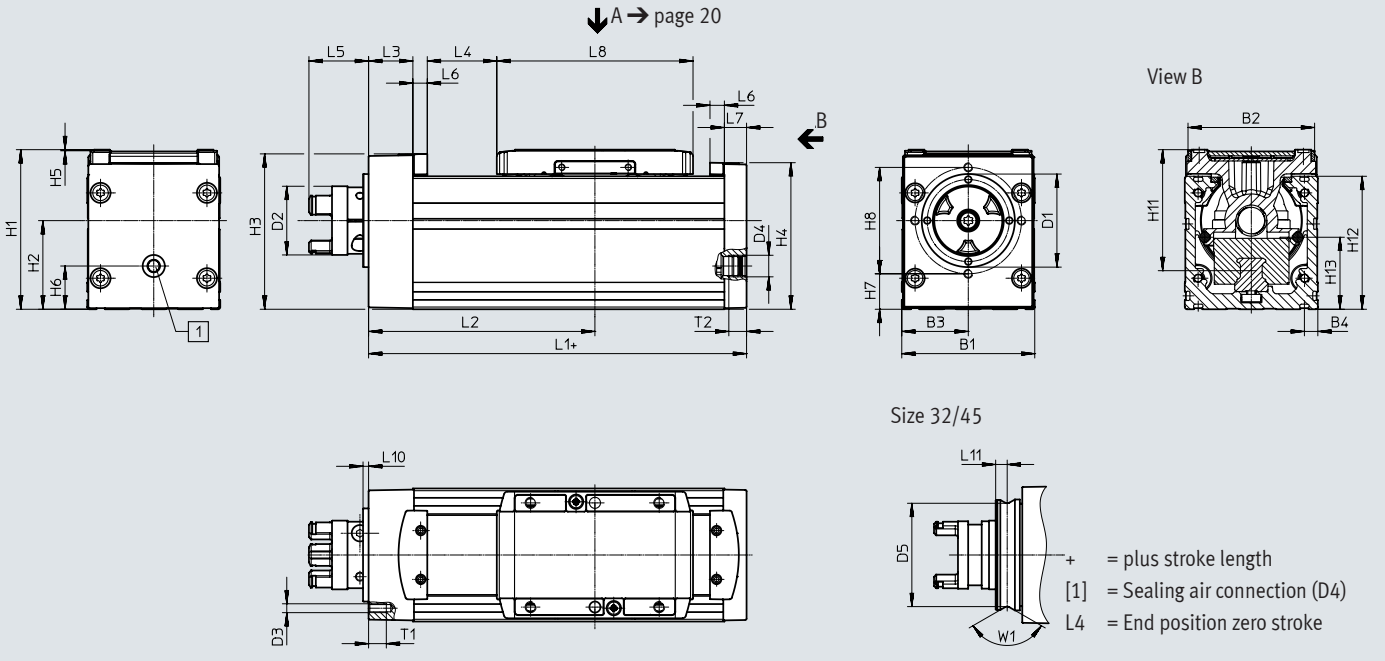

Size	B1	B2	B3	B4	D1 ⌀	D2 ⌀	D3	D4	D5 ⌀	H1	H2
32	32	29.6	16	4.9	25	16.5	–	M5	23	38.5	20
45	45	42.6	22.5	6.1	32	16.5	–	G1/8	29.6	54	27.9
60	60	57.1	30	6.1	42	31	M4	G1/8	–	72	40

Size	H3	H4	H5	H6	H7	H8	H11	H12	H13	L1	L2 Min.
32	36.3	35.6	0.3	8	–	–	31.4	32	13.7	104.5	57.9
45	50.8	49.6	0.5	12.5	–	–	42.8	45	18.5	134.3	79.7
60	70.1	66.1	0.5	19.5	16	48	54.6	60	32.5	170.5	102.1

Size	L3	L4	L5	L6	L7	L8	L10	L11	T1	T2	W1
32	10.5	13.4	19.9	4.5	5	59	6	2.6	–	5.5	120°
45	14.8	24.6	19.9	6.5	7	67.5	6	2.9	–	8	90°
60	20	31.4	26.9	6.5	10	88.5	2.5	–	8	8	–

Data sheet

Dimensions Download CAD data ➔ www.festo.com

Profile

Size 32

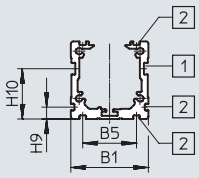

Size 45

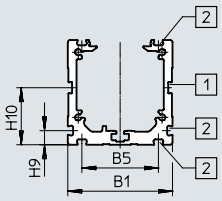

Size 60

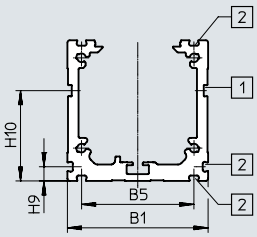

[1] = Slot for sensor bracket
[2] = Mounting slot

Size	B1	B5	H9	H10
32	32	22.2	4.9	20.8
45	45	32.9	6.1	24.5
60	60	47.9	6.1	38.5

Data sheet

Dimensions Download CAD data ➔ www.festo.com

Slide

Size 32

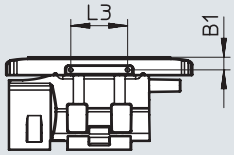

View A

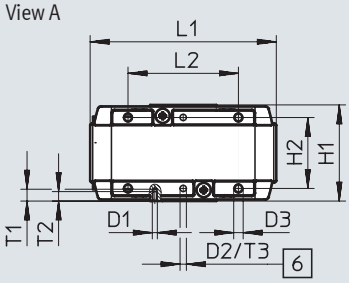

Size 45

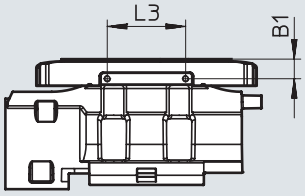

View A

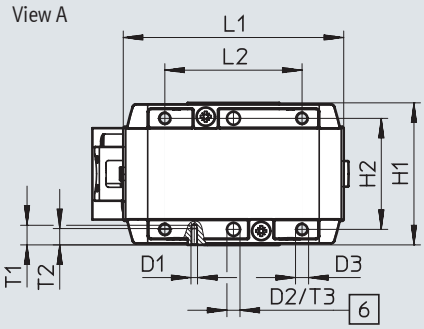

[6] Drill hole for centring pin ZBS

Size	B1 ±0.1	D1	D2 ø H8	D3	H1 ±0.1	H2 ±0.1 For D2 ±0.03
32	4	M1.6	2	M3	30.5	22.5
45	6	M2	4	M4	43.5	34

Size	L1	L2 ±0.1	L3 ±0.1	T1	T2	T3 +0.1	T4[1)]
32	59	35	18	3.8	3	3.1	4 ... 5
45	67.5	42	24	6	5	3.1	6 ... 7.5

1) Recommended screw-in depth

Data sheet

Dimensions Download CAD data ➔ www.festo.com

Slide

Size 60

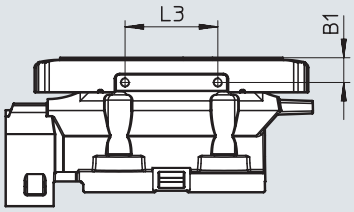

View A

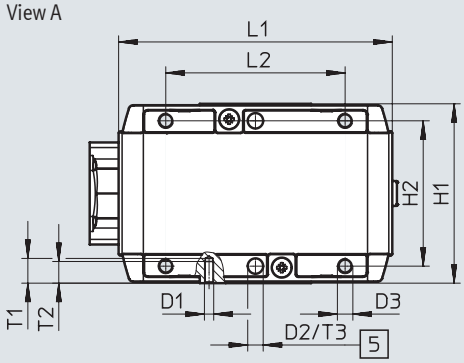

Size	B1 ±0.1	D1	D2 Ø H8	D3	H1 ±0.1	H2 ±0.1 For D2 ±0.03
60	8	M3	5	M5	58	47

Size	L1	L2 ±0.1	L3 ±0.1	T1	T2	T3 +0.1	T4[1)]
60	88.5	58	30	9	7	1.3	8.5 … 10

1) Recommended screw-in depth

Technical data

Ordering data

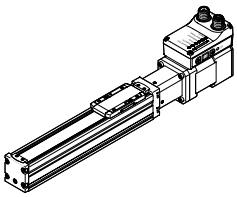

Size	Spindle pitch	Stroke	Part no.	Type
32	8	100	**8083424**	**ELGS-BS-KF-32-100-8P-ST-M-H1-PLK-AA**
		200	**8083425**	**ELGS-BS-KF-32-200-8P-ST-M-H1-PLK-AA**
		300	**8083426**	**ELGS-BS-KF-32-300-8P-ST-M-H1-PLK-AA**
		400	**8083427**	**ELGS-BS-KF-32-400-8P-ST-M-H1-PLK-AA**
		500	**8083428**	**ELGS-BS-KF-32-500-8P-ST-M-H1-PLK-AA**
		600	**8083429**	**ELGS-BS-KF-32-600-8P-ST-M-H1-PLK-AA**
		800	**8083430**	**ELGS-BS-KF-32-800-8P-ST-M-H1-PLK-AA**
45	10	100	**8083470**	**ELGS-BS-KF-45-100-10P-ST-M-H1-PLK-AA**
		200	**8083471**	**ELGS-BS-KF-45-200-10P-ST-M-H1-PLK-AA**
		300	**8083472**	**ELGS-BS-KF-45-300-10P-ST-M-H1-PLK-AA**
		400	**8083473**	**ELGS-BS-KF-45-400-10P-ST-M-H1-PLK-AA**
		500	**8083474**	**ELGS-BS-KF-45-500-10P-ST-M-H1-PLK-AA**
		600	**8083475**	**ELGS-BS-KF-45-600-10P-ST-M-H1-PLK-AA**
		800	**8083476**	**ELGS-BS-KF-45-800-10P-ST-M-H1-PLK-AA**
60	12	100	**8083383**	**ELGS-BS-KF-60-100-12P-ST-M-H1-PLK-AA**
		200	**8083384**	**ELGS-BS-KF-60-200-12P-ST-M-H1-PLK-AA**
		300	**8083385**	**ELGS-BS-KF-60-300-12P-ST-M-H1-PLK-AA**
		400	**8083386**	**ELGS-BS-KF-60-400-12P-ST-M-H1-PLK-AA**
		500	**8083387**	**ELGS-BS-KF-60-500-12P-ST-M-H1-PLK-AA**
		600	**8083388**	**ELGS-BS-KF-60-600-12P-ST-M-H1-PLK-AA**
		800	**8083389**	**ELGS-BS-KF-60-800-12P-ST-M-H1-PLK-AA**

Ordering data – Modular product system

Ordering table Size	32	45	60	Conditions	Code		Enter code
Module no.	8083433	8083493	8083398				
Series	ELGS				**ELGS**		ELGS
Drive system	Ball screw drive				**-BS**		-BS
Guide	Recirculating ball bearing guide				**-KF**		-KF
Size	32	45	60		**-...**		
Stroke [mm]	100, 200, 300, 400, 500, 600, 800	100, 200, 300, 400, 500, 600, 800	100, 200, 300, 400, 500, 600, 800		**-...**		
Spindle pitch [mm]	8P	10P	12P		**-...**		
Motor type	Stepper motor ST				**-ST**		-ST
Controller	Integrated				**-M**		-M
Control panel	Integrated				**-H1**		-H1
Bus protocol/control	NPN and IO-Link				**-NLK**		
	PNP and IO-Link				**-PLK**		
End-position sensing	With integrated end-position sensing				**-AA**		-AA
Cable outlet direction	Standard						
	Underneath				**-D**		
	Rear				**-B**		
	Front				**-F**		
Electrical accessories	None						
	Adapter for operation as IO-Link device				**+L1**		
Operating instructions	With operating instructions						
	Without operating instructions				**DN**		

Accessories

Profile mounting EAHF-L2-...-P-S
Material:
Anodised wrought aluminium alloy
RoHS-compliant

- For mounting the axis on the side of the profile

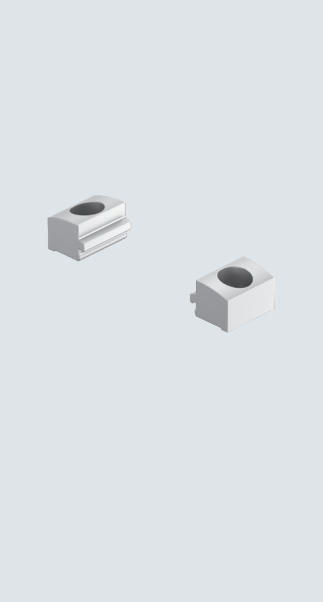

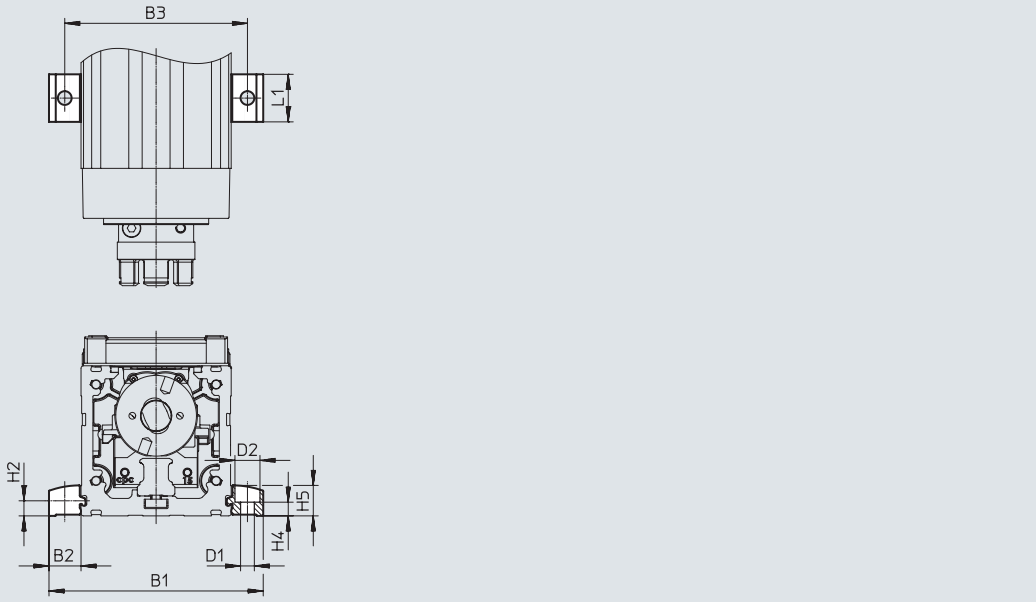

Dimensions and ordering data

For size	B1	B2	B3	D1 ø H13	D2 ø H13	H2
32	51.4	9.7	42	4.5	8	4.9
45	70.6	12.8	58	5.5	10	6.1
60	85.6	12.8	73	5.5	10	6.1

For size	H4 ±0.1	H5	L1	Weight [g]	Part no.	Type
32	4.2	9	19	4	**5183153**	**EAHF-L2-25-P-S**
45	5.5	12.2	19	6	**5184133**	**EAHF-L2-45-P-S**
60	5.5	12.2	19	6	**5184133**	**EAHF-L2-45-P-S**

Accessories

Profile mounting EAHF-L2-...-P
Material:
Anodised wrought aluminium alloy
RoHS-compliant

- For mounting the axis on the side of the profile.
  The profile mounting can be attached to the mounting surface using the drill hole in the centre.

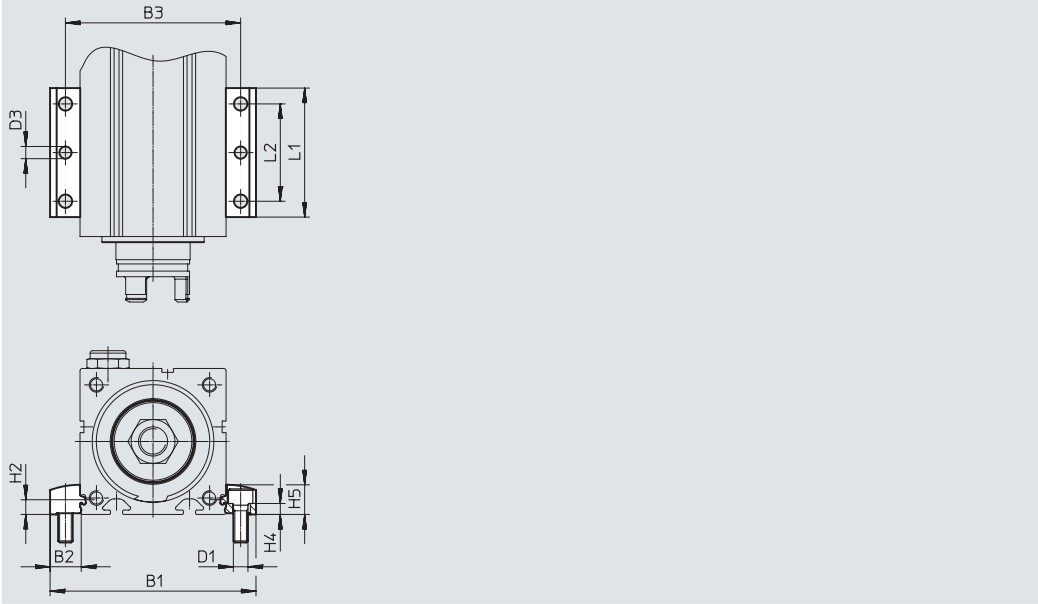

Dimensions and ordering data

For size	B1	B2	B3	D1 ø H13	D2 ø H13	D3 ø	H2
32	51.4	9.7	42	4.5	8	4	4.9
45	70.6	12.8	58	5.5	10	5	6.1
60	85.6	12.8	73	5.5	10	5	6.1

For size	H4 ±0.1	H5	L1	L2	Weight [g]	Part no.	Type
32	4.2	9	53	40	19	**4835684**	**EAHF-L2-25-P**
45	5.5	12.2	53	40	35	**4835728**	**EAHF-L2-45-P**
60	5.5	12.2	53	40	35	**4835728**	**EAHF-L2-45-P**

Accessories

Profile mounting EAHF-L2-...-P-D...
Material:
Anodised wrought aluminium alloy
RoHS-compliant

- For axis/axis mounting without adapter plate
- Mounting option: base axis with one-size-down assembly axis (➔ page 4)

Combination matrix

		[2] Assembly axis ELGC-BS/-TB; ELFC; EGSC-BS			
	Size	25	32	45	60
[1] Base axis ELGC-BS/-TB; ELFC	32	4759753	–	–	–
	45	–	4759748	–	–
	60	–	–	4759739	–

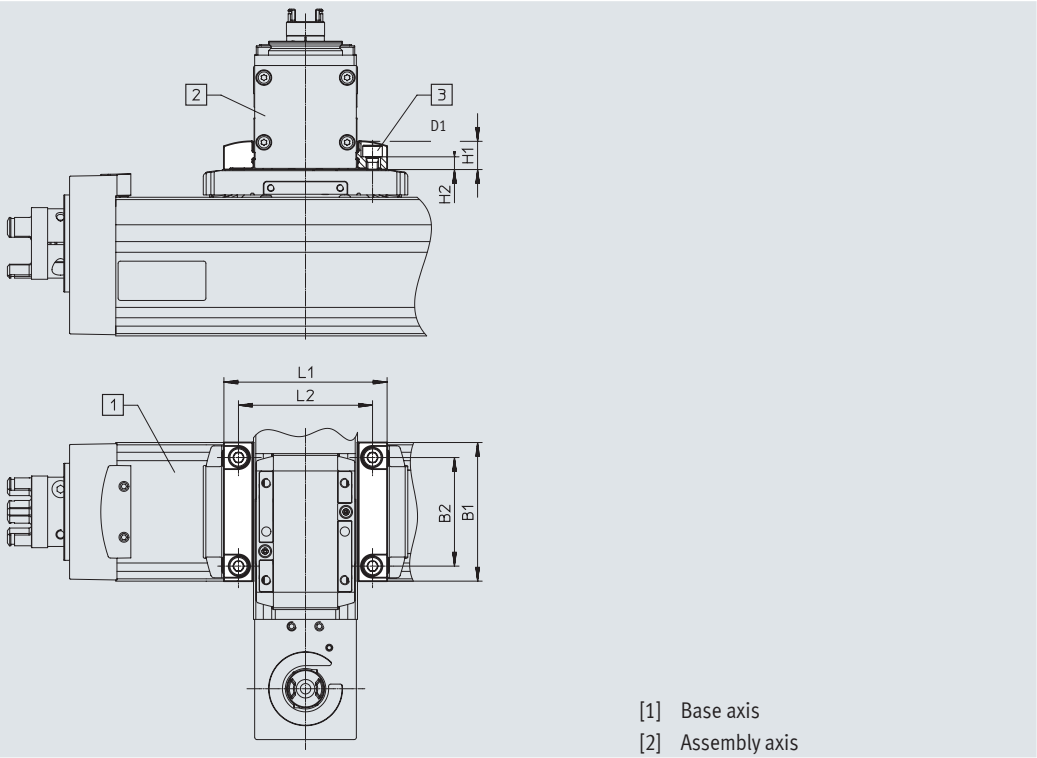

Dimensions and ordering data

For combination (size)	B1	B2	D1	H1
45/32	45	34	M4	9
60/45	60	47	M5	12.2

For combination (size)	H2 ±0.1	L1	L2	Weight [g]	Part no.	Type
45/32	3.7	51.4	42	24	**4759748**	**EAHF-L2-25-P-D2**
60/45	5.5	70.6	58	56	**4759739**	**EAHF-L2-45-P-D3**

Accessories

Adapter kit EHAA-D-L2
Material:
Anodised wrought aluminium alloy
RoHS-compliant

- For axis/axis mounting with adapter plate
- Mounting option: base axis with same size or one-size-down assembly axis (→ page 4)

Combination matrix

		[2] Assembly axis ELGC-BS/-TB; ELFC; EGSC-BS				
	Size	25	32	45	60	80
[1] Base axis ELGC-BS/-TB; ELFC	32	8066713		–	–	–
	45	–	8066714		–	–
	60	–	–	8066715		–

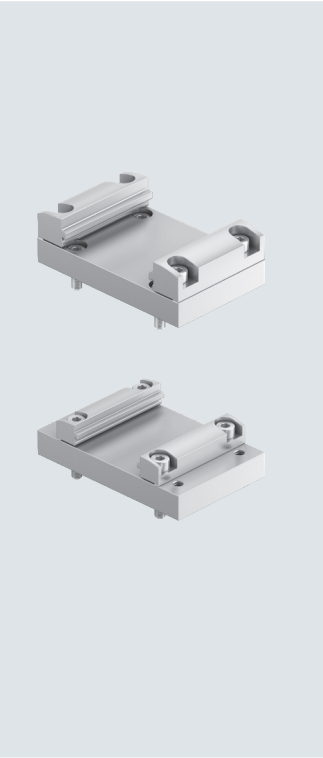

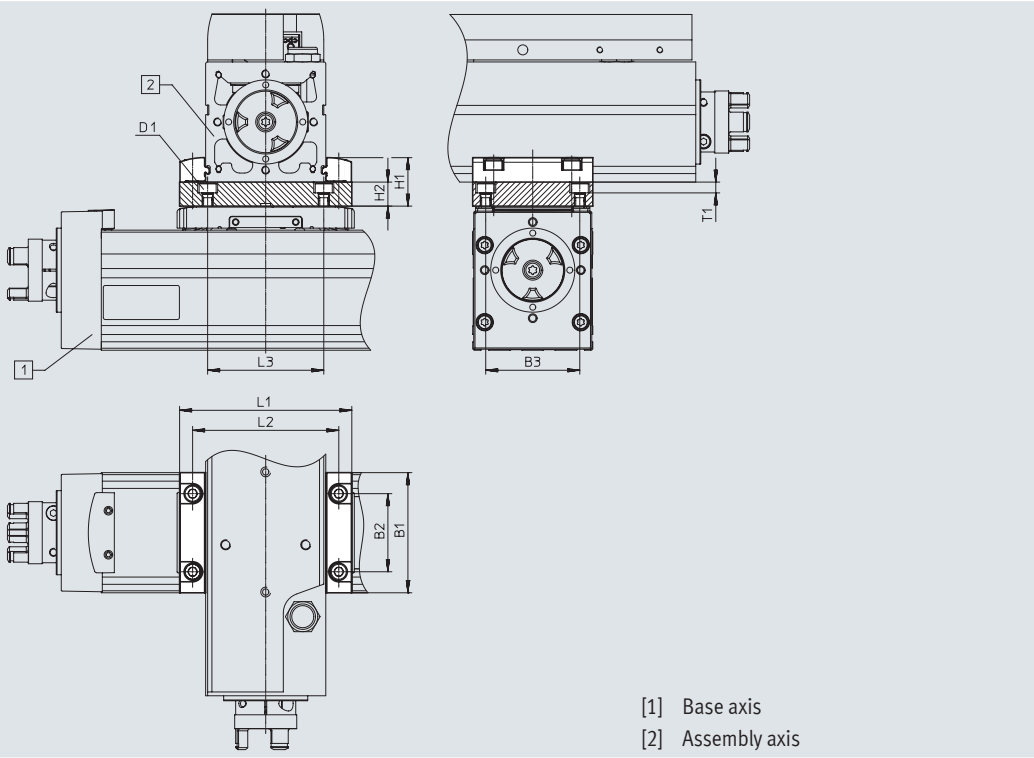

Dimensions and ordering data

For combination (size)	B1	B3 ±0.05	D1	H1	H2	L1	L2	L3	T1	Weight [g]	Part no.	Type
45/32	45	34	M4	19	10	51.4	42	42	5.4	136	**8066714**	**EHAA-D-L2-45-L2-45**
60/45	60	47	M5	24.2	12	70.6	58	58	5.4	205	**8066715**	**EHAA-D-L2-60-L2-60**

For combination (size)	B1	B2	B3 ±0.05	D1	H1	H2	L1	L2	L3	T1	Weight [g]	Part no.	Type
45/45	45	32	34	M4	22.2	10	71	58	42	5.4	136	**8066714**	**EHAA-D-L2-45-L2-45**
60/60	60	39	47	M5	24.2	12	86	73	58	5.4	205	**8066715**	**EHAA-D-L2-60-L2-60**

Accessories

Angle kit EHAA-D-L2-...-AP
Material:
Anodised wrought aluminium alloy
RoHS-compliant

- For mounting one-size-down vertical axes (assembly axes) on base axes with mounting position "slide at top"
  (➔ page 4)

Combination matrix

		[2] Assembly axis ELGC-BS/-TB; ELFC; EGSC-BS			
	Size	25	32	45	60
[1] Base axis ELGC-BS/-TB; ELFC	32	8066717	–	–	–
	45	–	8066718	–	–
	60	–	–	8066719	–

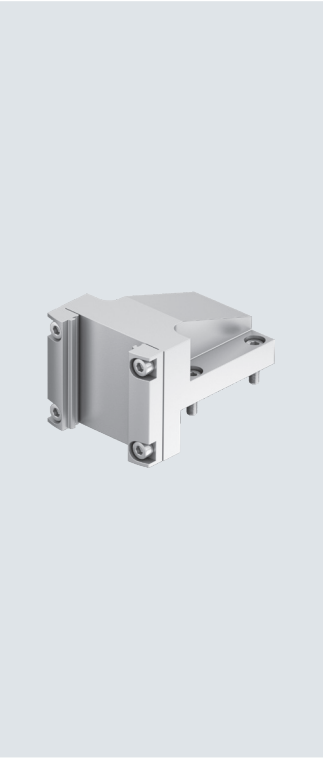

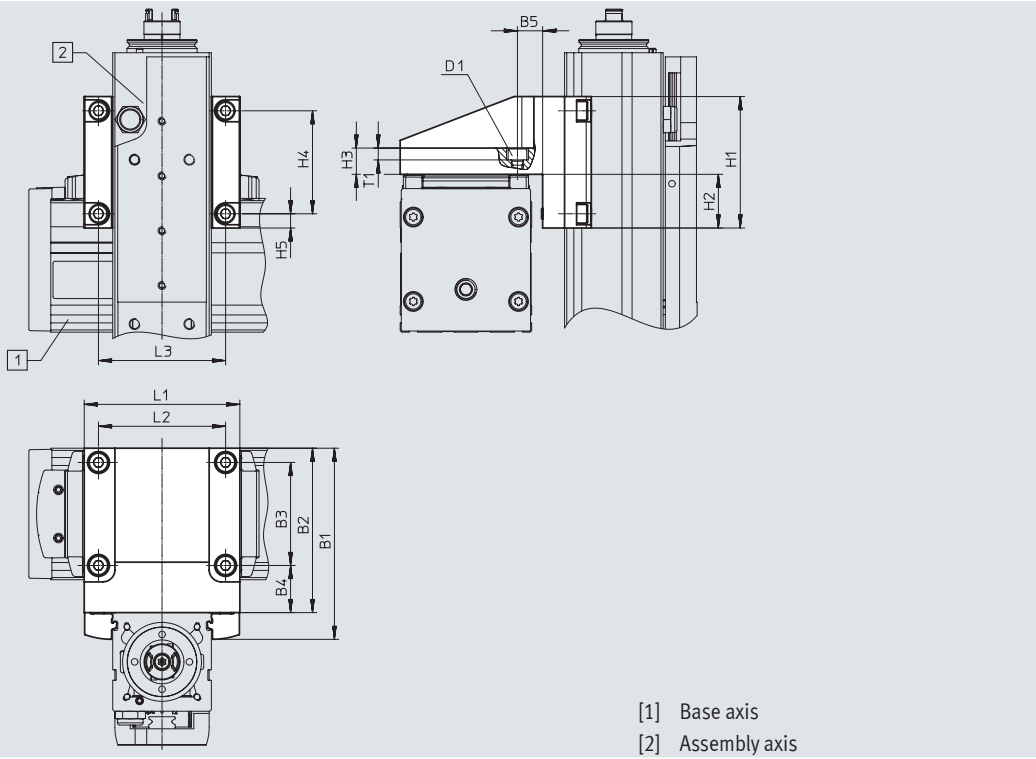

Dimensions and ordering data

For combination (size)	B1	B2	B3	B4	B5	D1	H1	H2	H3	H4
45/32	69	60	34	20.5	11.5	M4	45	17.5	10	34
60/45	87.2	75	47	21.5	11.5	M5	60	24.5	12	47

For combination (size)	H5	L1	L2	L3	T1	Weight [g]	Part no.	Type
45/32	5.5	52	42	42	5.4	222	**8066718**	**EHAA-D-L2-45-L2-32-AP**
60/45	6.5	71	58	58	5.4	433	**8066719**	**EHAA-D-L2-60-L2-45-AP**

Accessories

Switch lug EAPM-L2-SLS
For sensing using inductive proximity switches SIES-8M

Material:
Galvanised steel
RoHS-compliant

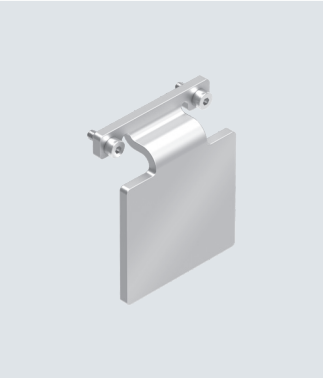

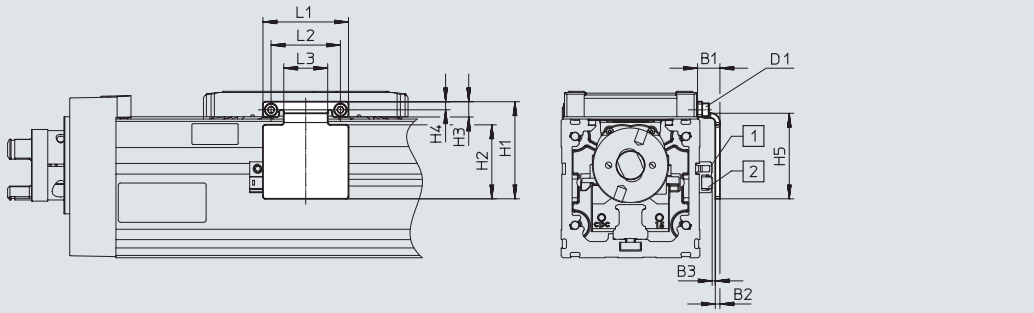

[1] Sensor bracket
[2] Proximity switch

Dimensions and ordering data

For size	B1	B2	B3	D1	H1 ±0.2	H2	H3	H4
32	9.2	2	1.0±0.31	M1.6	27	19	4.3	2.5
45	9.4	2	1.2±0.31	M2	37	28	5.5	3.3
60	9.7	2	1.3±0.31	M3	37	32	6.6	3.5

For size	H5 ±0.2	L1 ±0.2	L2 ±0.15	L3	Weight [g]	Part no.	Type
32	24	22	18	10	10	**8067259**	**EAPM-L2-32-SLS**
45	33	30	24	14	18	**8067260**	**EAPM-L2-45-SLS**
60	37	42	30	19	27	**8067261**	**EAPM-L2-60-SLS**

Sensor bracket EAPM-L2-SH

Material:
Anodised wrought aluminium alloy
RoHS-compliant

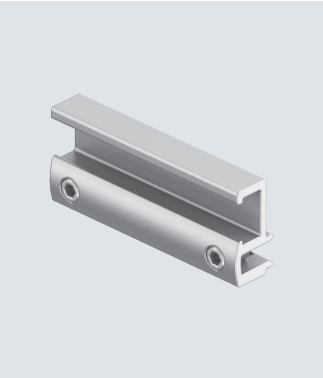

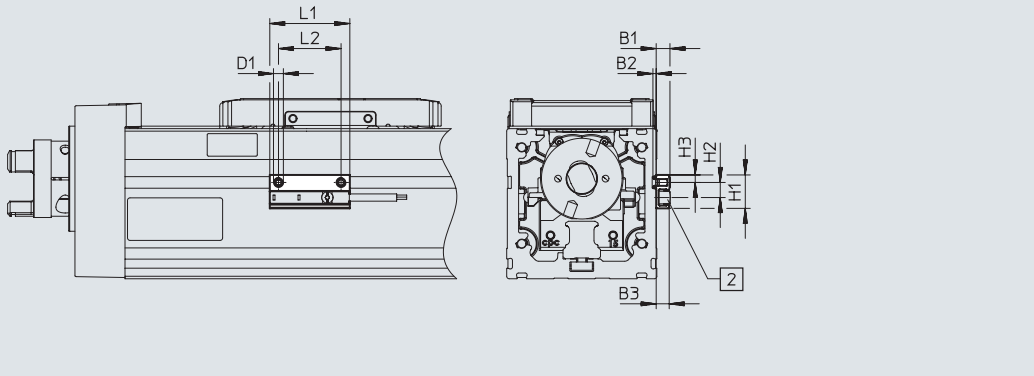

Dimensions and ordering data

For size	B1	B2	D1	H1	H2
32, 45, 60	5.5	1.3	M4	13.4	6

For size	H3	L1	L2	Weight [g]	Part no.	Type
32, 45, 60	3	32	25	4	**4759852**	**EAPM-L2-SH**

Accessories

Ordering data	For size	Description	Part no.	Type	PE[1]
Centring pin ZBS/centring sleeve ZBH					
	32	For slide	**525273**	**ZBS-2**	10
	45		**562959**	**ZBS-4**	
	60		**189652**	**ZBH-5**	
Clamping component EADT					
	32, 45	Tool for retensioning the cover strip	**8065818**	**EADT-S-L5-32**	1
	60		**8058451**	**EADT-S-L5-70**	

1) Packaging unit

Ordering data – proximity switches for T-slot, inductive

Data sheets → Internet: sies

	Type of mounting	Switching output	Electrical connection	Cable length [m]	Part no.	Type
N/O contact						
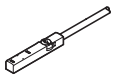	Insertable in the slot from above, flush with the cylinder profile	PNP	Cable, 3-wire	7.5	**551386**	**SIES-8M-PS-24V-K-7,5-OE**
			Plug M8x1, 3-pin	0.3	**551387**	**SIES-8M-PS-24V-K-0,3-M8D**
		NPN	Cable, 3-wire	7.5	**551396**	**SIES-8M-NS-24V-K-7,5-OE**
			Plug M8x1, 3-pin	0.3	**551397**	**SIES-8M-NS-24V-K-0,3-M8D**
N/C contact						
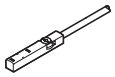	Insertable in the slot from above, flush with the cylinder profile	PNP	Cable, 3-wire	7.5	**551391**	**SIES-8M-PO-24V-K-7,5-OE**
			Plug M8x1, 3-pin	0.3	**551392**	**SIES-8M-PO-24V-K-0,3-M8D**
		NPN	Cable, 3-wire	7.5	**551401**	**SIES-8M-NO-24V-K-7,5-OE**
			Plug M8x1, 3-pin	0.3	**551402**	**SIES-8M-NO-24V-K-0,3-M8D**

Ordering data – Proximity switch for T-slot, magneto-resistive

Data sheets → Internet: smt

	Type of mounting	Switching output	Electrical connection	Cable length [m]	Part no.	Type
N/O contact						
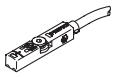	Inserted in the slot from above, flush with the cylinder profile, short design	PNP	Cable, 3-wire	2.5	**574335**	**SMT-8M-A-PS-24V-E-2,5-OE**
			Plug M8x1, 3-pin	0.3	**574334**	**SMT-8M-A-PS-24V-E-0,3-M8D**
N/C contact						
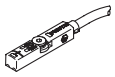	Inserted in the slot from above, flush with the cylinder profile, short design	PNP	Cable, 3-wire	7.5	**574340**	**SMT-8M-A-PO-24V-E-7,5-OE**

Ordering data – Connecting cables

Data sheets → Internet: nebu

	Electrical connection, left	Electrical connection, right	Cable length [m]	Part no.	Type
	Straight socket, M8x1, 3-pin	Cable, open end, 3-wire	2.5	**541333**	**NEBU-M8G3-K-2.5-LE3**
			5	**541334**	**NEBU-M8G3-K-5-LE3**
	Angled socket, M8x1, 3-pin	Cable, open end, 3-wire	2.5	**541338**	**NEBU-M8W3-K-2.5-LE3**
			5	**541341**	**NEBU-M8W3-K-5-LE3**

Note

Proximity switches are optional and only required in order to sense any intermediate positions.

Accessories

Ordering data – Supply cables

Data sheets → Internet: nebl

	Electrical connection, left	Electrical connection, right	Cable length [m]	Part no.	Type
	Angled socket, M12x1, 4-pin	Cable, open end, 4-wire	2	**8080778**	**NEBL-T12W4-E-2-N-LE4**
			5	**8080779**	**NEBL-T12W4-E-5-N-LE4**
			10	**8080780**	**NEBL-T12W4-E-10-N-LE4**
			15	**8080781**	**NEBL-T12W4-E-15-N-LE4**
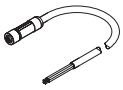	Straight socket, M12x1, 4-pin	Cable, open end, 4-wire	2	**8080790**	**NEBL-T12G4-E-2-N-LE4**
			5	**8080791**	**NEBL-T12G4-E-5-N-LE4**
			10	**8080792**	**NEBL-T12G4-E-10-N-LE4**
			15	**8080793**	**NEBL-T12G4-E-15-N-LE4**

Ordering data – Connecting cables

Data sheets → Internet: nebc

	Electrical connection, left	Electrical connection, right	Cable length [m]	Part no.	Type
	Angled socket, M12x1, 8-pin	Cable, open end, 8-wire	2	**8094476**	**NEBC-M12W8-E-2-N-B-LE8**
			5	**8094478**	**NEBC-M12W8-E-5-N-B-LE8**
			10	**8094481**	**NEBC-M12W8-E-10-N-B-LE8**
			15	**8094479**	**NEBC-M12W8-E-15-N-B-LE8**
		Straight plug, M12x1, 8-pin	2	**8080786**	**NEBC-M12W8-E-2-N-M12G8**
			5	**8080787**	**NEBC-M12W8-E-5-N-M12G8**
			10	**8080788**	**NEBC-M12W8-E-10-N-M12G8**
			15	**8080789**	**NEBC-M12W8-E-15-N-M12G8**
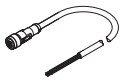	Straight socket, M12x1, 8-pin	Cable, open end, 8-wire	2	**8094480**	**NEBC-M12G8-E-2-N-B-LE8**
			5	**8094477**	**NEBC-M12G8-E-5-N-B-LE8**
			10	**8094482**	**NEBC-M12G8-E-10-N-B-LE8**
			15	**8094475**	**NEBC-M12G8-E-15-N-B-LE8**
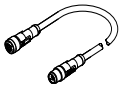		Straight plug, M12x1, 8-pin	2	**8080782**	**NEBC-M12G8-E-2-N-M12G8**
			5	**8080783**	**NEBC-M12G8-E-5-N-M12G8**
			10	**8080784**	**NEBC-M12G8-E-10-N-M12G8**
			15	**8080785**	**NEBC-M12G8-E-15-N-M12G8**

Note

The cables are positioned at a 45° angle to the axis.

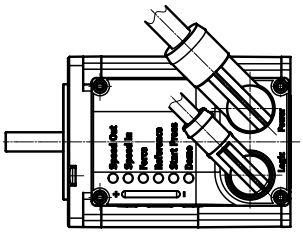

Ordering data – IO-Link master USB

Data sheets → Internet: cdsu

	Description	Cable length [m]	Part no.	Type
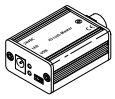	• For using the unit with IO-Link • An external power supply plug is additionally required (not in scope of delivery)	0.3	**8091509**	**CDSU-1**

Ordering data – Adapter

Data sheets → Internet: nefc

	Electrical connection, left	Electrical connection, right	Cable length [m]	Part no.	Type
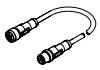	Straight socket, M12x1, 8-pin	• Straight plug, M12x1, 5-pin • Only for use with IO-Link Port Class A Master (recommended)	0.3	**8080777**	**NEFC-M12G8-0.3-M12G5-LK**