Cylinders with clamping unit, standard hole pattern

FESTO

Characteristics

At a glance

Clamping units are generally used for the frictional locking of longitudinally adjustable rods at any position. The piston rod can be clamped by attaching a clamping unit to a pneumatic cylinder. The clamping unit is designed to securely lock the piston rod securely so that the application of external force on the piston rod does not produce any relative motion. The piston rod can be locked at any position in the stroke, as well as in the end positions and in intermediate positions.

- The clamping force is released when compressed air is supplied to the clamping unit
- Static holding force to 8000 N
- The cylinders comply with ISO 15552 (DIN ISO 6431), except in terms of installation length

Selection aid

Cylinder with clamping unit DNCKE Page 6

- For use as a holding device (static application):
  - Holding and clamping in the event of power failure
  - Protection against pressure failure and pressure drop
  - Secures the piston rod at intermediate stops so that process tasks can be carried out
- Wide selection of mounting options

Cylinder with clamping unit DNCKE-S, for safety-related applications Page 9

- Pneumatic braking/holding device for use in safety-related parts of control systems.
  The clamping unit is not a complete safety solution. It can be used as part of a solution.
- For use as a holding device (static application):
  - Holding and clamping in the event of power failure
  - Protection against pressure failure and pressure drop
  - Holding the piston rod at intermediate stops so that process tasks can be carried out
- For use as a braking device (dynamic application):
  - Braking or stopping a movement
  - Interrupting a movement if a danger area is entered
- Holding force of the clamp is greater than the cylinder's max. permissible feed force
- Suitable for use in safety-oriented parts of control systems belonging to category 1 to EN ISO 13849-1 (well-tried component). Additional control measures are required for use in higher categories.
- When used as a braking device, the overtravel must be checked regularly
- Products intended for use in safety-related applications must be selected, sized and arranged in accordance with valid standards and regulations.

Type codes

001	Series	
DNCKE	Cylinder with clamping unit, double-acting, standard hole pattern	

002	Piston diameter	
40	40	
63	63	
100	100	

003	Stroke	
...	10 ... 2000	

004	Cushioning	
PPV	Pneumatic cushioning, adjustable at both ends	

005	Position sensing	
A	For proximity sensor	

006	Certification	
	None	
S	Safety device to Machinery Directive 2006/42/EC	

Peripherals overview

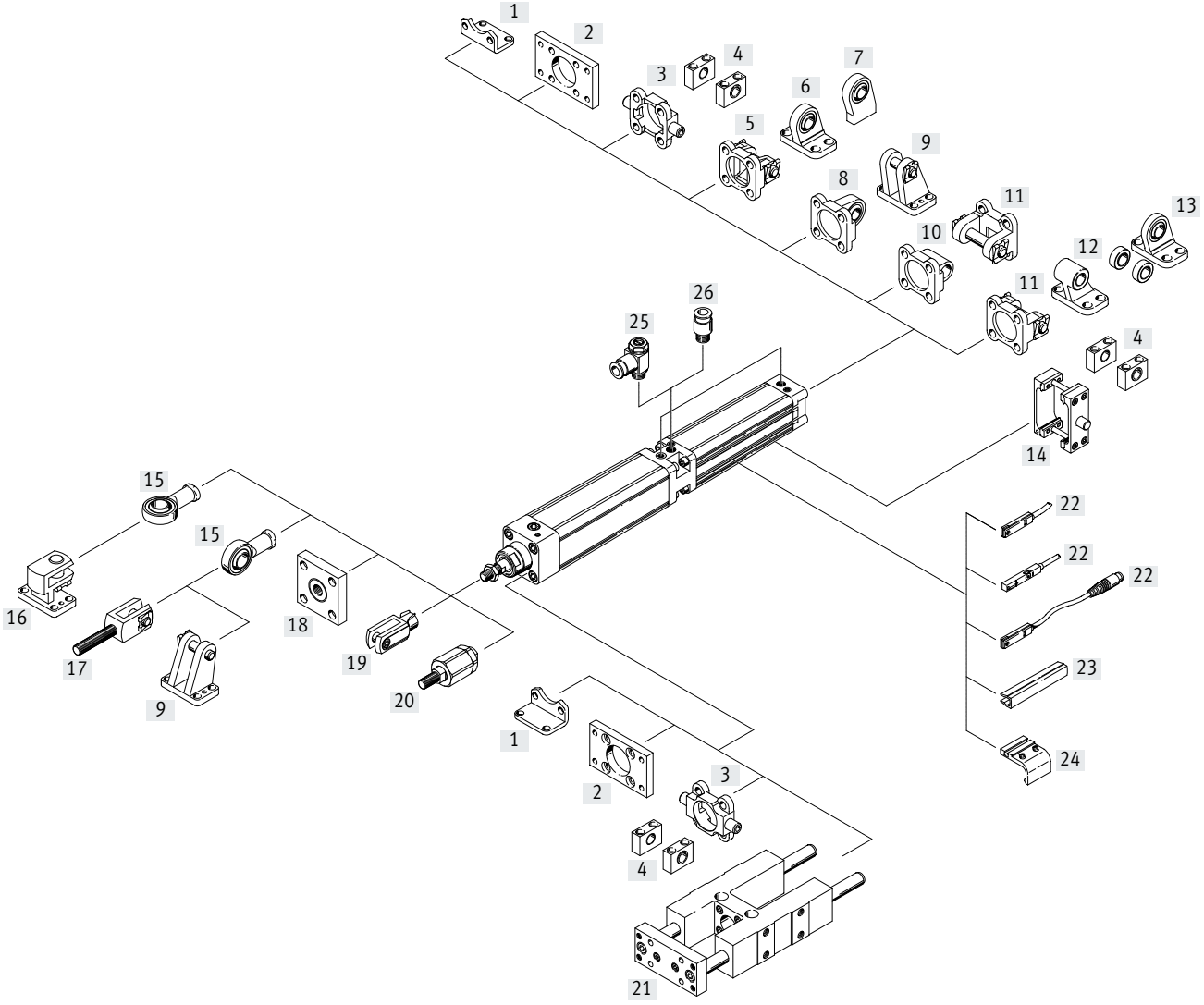

Peripherals overview

Mounting components and accessories		Description	DNCKE	DNCKE-S	→ Page/Internet
[1]	Foot mounting HNC	For bearing or end caps	■	■	14
[2]	Flange mounting FNC	For bearing or end caps	■	■	14
[3]	Trunnion flange ZNCF	For bearing or end caps	■	–	15
[4]	Trunnion support LNZG	For trunnion flange ZNCF	■	–	16
[5]	Swivel flange SNC	For end caps	■	–	16
[6]	Clevis foot LSNG	With spherical bearing	■	–	18
[7]	Clevis foot LSNSG	Weld-on, with spherical bearing	■	–	18
[8]	Swivel flange SNCS	With spherical bearing for end caps	■	–	17
[9]	Clevis foot LBG	For swivel flange SNCS	■	–	18
[10]	Swivel flange SNCL	For end caps	■	–	18
[11]	Swivel flange SNCB	For end caps	■	–	17
[12]	Clevis foot LNG	For swivel flange SNCB	■	–	18
[13]	Clevis foot LSN	With spherical bearing	■	–	18
[14]	Trunnion flange kit DAMT	For mounting anywhere along the cylinder profile barrel	■	–	15
[15]	Rod eye SGS	With spherical bearing	■	–	19
[16]	Right-angle clevis foot LQG	For rod eye SGS	■	–	18
[17]	Rod clevis SGA	With male thread	■	–	19
[18]	Coupling piece KSG	For compensating radial deviations	■	–	19
[19]	Rod clevis SG	Permits a swivelling movement of the cylinder in one plane	■	–	19
[20]	Self-aligning rod coupler FK	For compensating radial and angular deviations	■	■	19
[21]	Guide unit FENG	For protecting standards-based cylinders against rotation at high torque loads	■	■	19
[22]	Proximity switch SME/SMT	Can be integrated in the cylinder profile barrel	■	■	20
[23]	Slot cover ABP-5-S	For protecting the sensor cable and the sensor slots from contamination	■	■	21
[24]	Mounting kit SMB-8-FENG	For attaching proximity switch SMT-8 to cylinders in combination with guide unit FENG	■	■	20
[25]	One-way flow control valve GRLA	To control the speed	■	■	21
[26]	Push-in fitting QS	For connecting compressed air tubing with standard O.D.	■	■	qs

Data sheet

Function

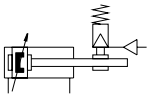

- Diameter
  40, 63, 100 mm
- Stroke length
  10 ... 2000 mm

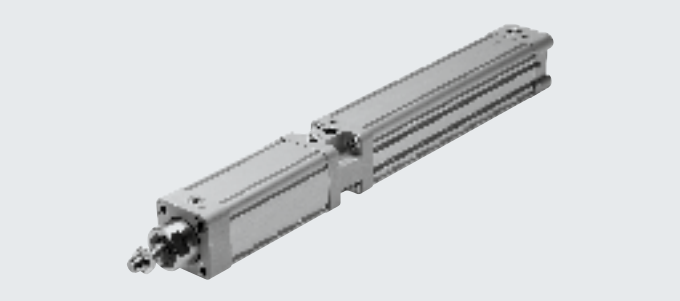

Note
Additional measures are required for use in safety-related applications; in Europe, for example, the standards listed under the EC Machinery Directive must be observed. Without additional measures in accordance with legally specified minimum requirements, the product is not suitable as a safety relevant component in control systems.

General technical data				
Piston diameter		40	63	100
Pneumatic connection	Cylinder	G1/4	G3/8	G1/2
	Clamping unit	G1/8	G1/4	G3/8
Piston rod thread		M12x1.25	M16x1.5	M20x1.5
Design		Piston		
		Piston rod		
		Cylinder barrel		
Cushioning		Adjustable at both ends		
Cushioning length	[mm]	20	22	32
Position sensing		Via proximity switch		
Type of mounting		With female thread		
		With accessories		
Type of clamping with active direction		At both ends		
		Clamping via spring force, released via compressed air		
Mounting position		Any		

Note
This product conforms to ISO 1179-1 and ISO 228-1.

Operating and environmental conditions				
Piston diameter		40	63	100
Operating medium		Compressed air to ISO 8573-1:2010 [7:4:4]		
Note on the operating/pilot medium		Lubricated operation possible (in which case lubricated operation will always be required)		
Operating pressure	[bar]	0.6 ... 10		
Min. release pressure	[bar]	3.8		
Ambient temperature[1)]	[°C]	–20 ... +80		
ATEX		Selected types ➔ www.festo.com		

1) Note operating range of proximity switches.

Weight [g]			
Piston diameter	40	63	100
Basic weight with 0 mm stroke	2340	5485	18160
Additional weight per 10 mm stroke	45	73	110
Moving mass with 0 mm stroke	500	935	2150
Additional mass per 10 mm stroke	16	25	40

Data sheet

Forces [N]			
Piston diameter	40	63	100
Theoretical force at 6 bar, advancing	754	1870	4712
Theoretical force at 6 bar, retracting	633	1682	4418
Static holding force	1300	3200	8000

Note

The specified holding force refers to a static load. If this value is exceeded, slippage may occur. Dynamic forces occurring during operation must not exceed the static holding force if slippage is to be avoided. The clamping unit is backlash-free in the clamped state when varying loads are applied to the piston rod. Lateral loads and bending moments on the round material can impair the function. (Make sure that the load on the round material is only in the direction of movement.)

Control:

The clamping unit may only be released when the forces on the piston have reached equilibrium. Otherwise there is a risk of accidents due to the sudden movement of the piston rod. Blocking off the compressed air supply at both ends (e.g. with a 5/3-way valve) does not provide any safety.

Impact energy [J]			
Piston diameter	40	63	100
Max. impact energy at end positions	0.7	1.3	3

Permissible impact velocity: $v = \sqrt{\frac{2 \cdot E}{m_1 + m_2}}$

Maximum permissible mass: $m_2 = \frac{2 \cdot E}{v^2} - m_1$

v	Permissible impact velocity
E	Max. impact energy
m_1	Moving mass (drive)
m_2	Moving payload

Note

These specifications represent the maximum values that can be achieved. Observe the maximum permissible impact energy.

Materials

Sectional view

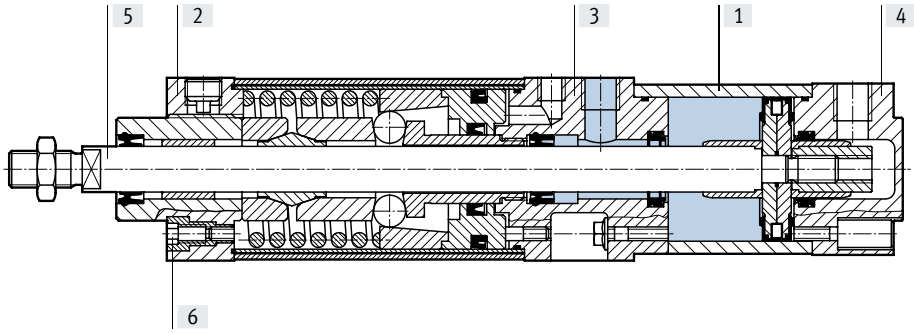

Cylinder		
[1]	Housing	Wrought aluminium alloy
[2]	Bearing cap	Wrought aluminium alloy
[3]	Connection cap	Wrought aluminium alloy
[4]	End cap	Die-cast aluminium
[5]	Piston rod	Tempered steel
[6]	Flange screws	Tempered steel
–	Seals	TPE-U(PU), NBR

Data sheet

Dimensions Download CAD data ➔ www.festo.com

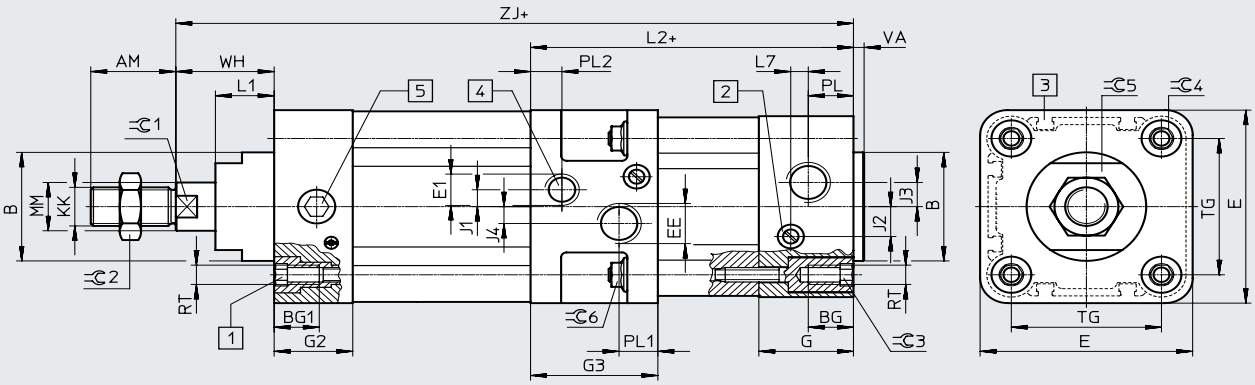

[1] Socket head screw with female thread for mounting components
[2] Adjusting screw for adjustable end-position cushioning
[3] Sensor slot for proximity switch
[4] Connection to release clamping function
[5] Locking screw
+ = plus stroke length

ø [mm]	AM	B ø d11	BG	BG1	E	EE	E1	G	G2	G3	J1
40	24	35	16	15	54	G1/4	G1/8	28.8	22	49.6	2
63	32	45	17	17	80	G3/8	G1/4	34.3	29.5	47.9	7
100	42	55	17	17	126	G1/2	G3/8	38	32.5	46.7	15

ø [mm]	J2	J3	J4	KK	L1	L2	L7	MM ø	PL	PL1	PL2
40	8	6	0	M12x1.25	17.9	114.5	3.6	16	14	21.3	9
63	12.4	10	7	M16x1.5	22.1	121.5	6.6	20	17	14.6	11.8
100	12	10	10	M20x1.5	29.2	131.5	8	25	18.8	16.4	14.4

ø [mm]	RT	TG	VA	WH	ZJ	⌭1	⌭2	⌭3	⌭4	⌭5	⌭6
40	M6	38	4	30	277	13	19	6	6	30	8
63	M8	56.5	4	37	315	17	24	8	8	36	10
100	M10	89	4	51	408	22	30	6	10	41	13

Note: This product conforms to ISO 1179-1 and ISO 228-1.

Ordering data

Piston diameter [mm]	Stroke [mm]	Part no.	Type
40	10 ... 2000	**526482**	**DNCKE-40-...-PPV-A**
63	10 ... 2000	**526483**	**DNCKE-63-...-PPV-A**
100	10 ... 2000	**526484**	**DNCKE-100-...-PPV-A**

Data sheet

Function

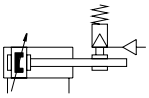

- Ø - Diameter
  40, 63, 100 mm
- l - Stroke length
  10 ... 2000 mm

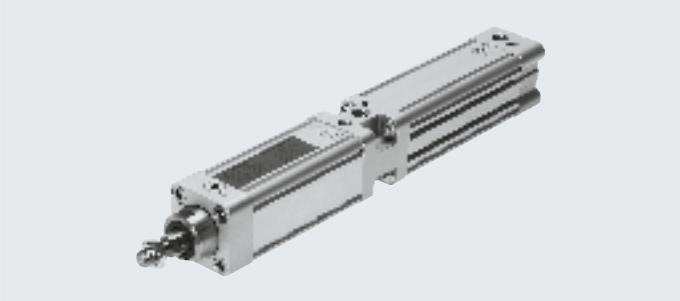

General technical data				
Piston diameter		40	63	100
Pneumatic connection	Cylinder	G1/4	G3/8	G1/2
	Clamping unit	G1/8	G1/4	G3/8
Piston rod thread		M12x1.25	M16x1.5	M20x1.5
Design		Piston		
		Piston rod		
		Cylinder barrel		
Cushioning		Adjustable at both ends		
Cushioning length	[mm]	20	22	32
Position sensing		Via proximity switch		
Type of mounting		With female thread		
		With accessories		
Type of clamping with active direction		At both ends		
		Clamping via spring force, released via compressed air		
Mounting position		Any		
Function		Single-channel to EN ISO 13849-1, category 1		
Safety function		Holding and stopping a movement		

Note: This product conforms to ISO 1179-1 and ISO 228-1.

Operating and environmental conditions				
Piston diameter		40	63	100
Operating medium		Compressed air to ISO 8573-1:2010 [7:4:4]		
Note on the operating/pilot medium		Lubricated operation possible (in which case lubricated operation will always be required)		
Operating pressure	[bar]	0.6 ... 8		
Min. release pressure	[bar]	3.8		
Max. permissible test pressure	[bar]	10		
Ambient temperature[1)]	[°C]	–10 ... +60		

1) Note operating range of proximity switches

Weight [g]			
Piston diameter	40	63	100
Basic weight with 0 mm stroke	2340	5485	18160
Additional weight per 10 mm stroke	45	73	110
Moving mass with 0 mm stroke	500	935	2150
Additional mass per 10 mm stroke	16	25	40

Data sheet

Forces [N]			
Piston diameter	40	63	100
Theoretical force at 6 bar, advancing	754	1870	4712
Theoretical force at 6 bar, retracting	633	1682	4418
Static holding force	1300	3200	8000

Note

The specified holding force refers to a static load. If this value is exceeded, slippage may occur. Dynamic forces occurring during operation must not exceed the static holding force if slippage is to be avoided. The clamping unit is backlash-free in the clamped state when varying loads are applied to the piston rod. Lateral loads and bending moments on the round material can impair the function. (Make sure that the load on the round material is only in the direction of movement.)

Control:

The clamping unit may only be released when the forces on the piston have reached equilibrium. Otherwise there is a risk of accidents due to the sudden movement of the piston rod. Blocking off the compressed air supply at both ends (e.g. with a 5/3-way valve) does not provide any safety.

Data sheet

Theoretical overtravel s as a function of the piston speed v in a vertical mounting position

The overtravel is the distance that the piston rod covers between exhausting of the clamping unit and coming to a standstill. It must be determined by the customer when the machine is being set up. When the clamping unit is used as a braking device, an increase in the overtravel as a function of the stress and the frequency of braking (wear) must be expected.
The clamping unit DNCKE-S can be used in safety-related parts of control systems belonging to category 1 (well-tried component) as defined by EN ISO 13849-1. For use in categories higher than category 1 to EN ISO 13849-1, the overtravel must be achieved even in the event of faults. It is dependent on the ambient conditions and stress, e.g.:

- Operating pressure
- Nominal size of switching valve
- Cable length
- Diameter of the connecting cable to the clamping unit
- Load and speed

The overtravel can be reduced by attaching a quick exhaust valve to the compressed air supply port of the clamping unit.

Ø 40

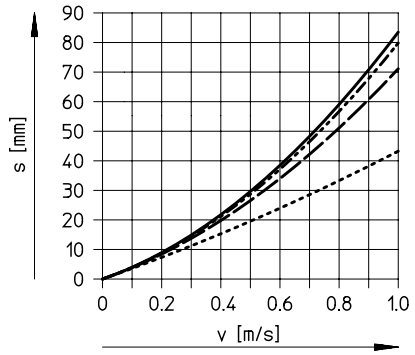

0.6 kg
10 kg
27 kg
42 kg

Ø 63

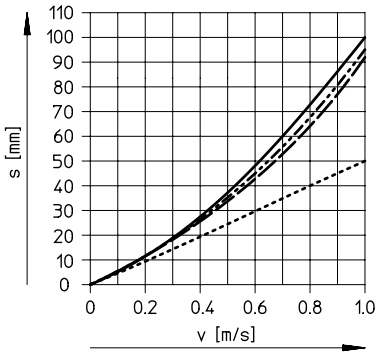

1 kg
22 kg
63 kg
102 kg

Ø 100

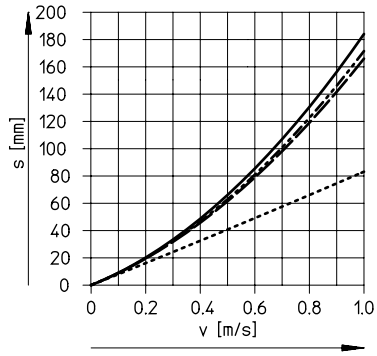

1.5 kg
20 kg
100 kg
200 kg

Data sheet

Impact energy [J] Piston diameter	40	63	100
Max. impact energy at end positions	0.7	1.3	3

Permissible impact velocity: $v = \sqrt{\frac{2 \cdot E}{m_1 + m_2}}$

Maximum permissible mass: $m_2 = \frac{2 \cdot E}{v^2} - m_1$

v	Permissible impact velocity
E	Max. impact energy
m_1	Moving mass (drive)
m_2	Moving payload

Note

These specifications represent the maximum values that can be achieved. Observe the maximum permissible impact energy.

Materials

Sectional view

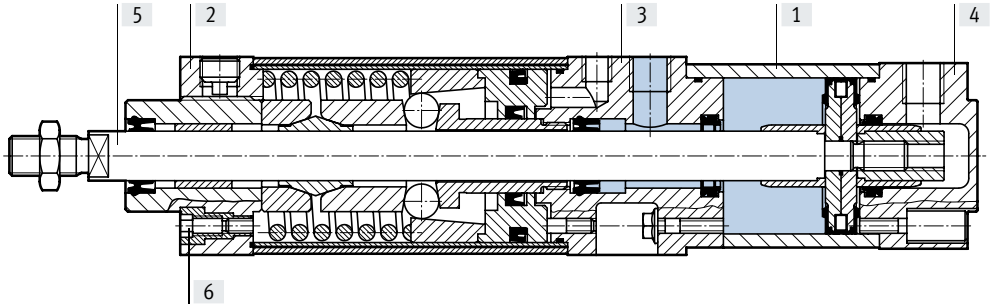

Cylinder		
[1]	Housing	Wrought aluminium alloy
[2]	Bearing cap	Wrought aluminium alloy
[3]	Connection cap	Wrought aluminium alloy
[4]	End cap	Die-cast aluminium
[5]	Piston rod	Tempered steel
[6]	Flange screws	Tempered steel
–	Seals	TPE-U(PU), NBR

Recommendation for mounting

As holding device, horizontal installation

With foot mounting HNC

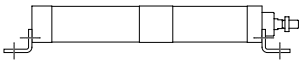

As braking device, vertical installation

With flange mounting FNC (note braking direction)

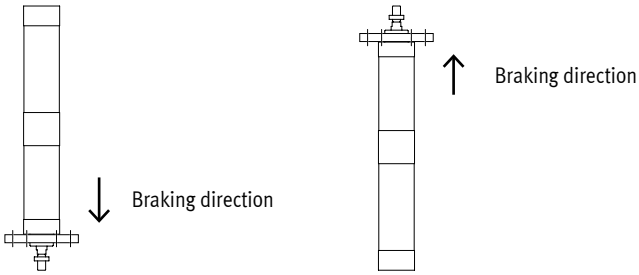

Data sheet

Dimensions Download CAD data ➔ www.festo.com

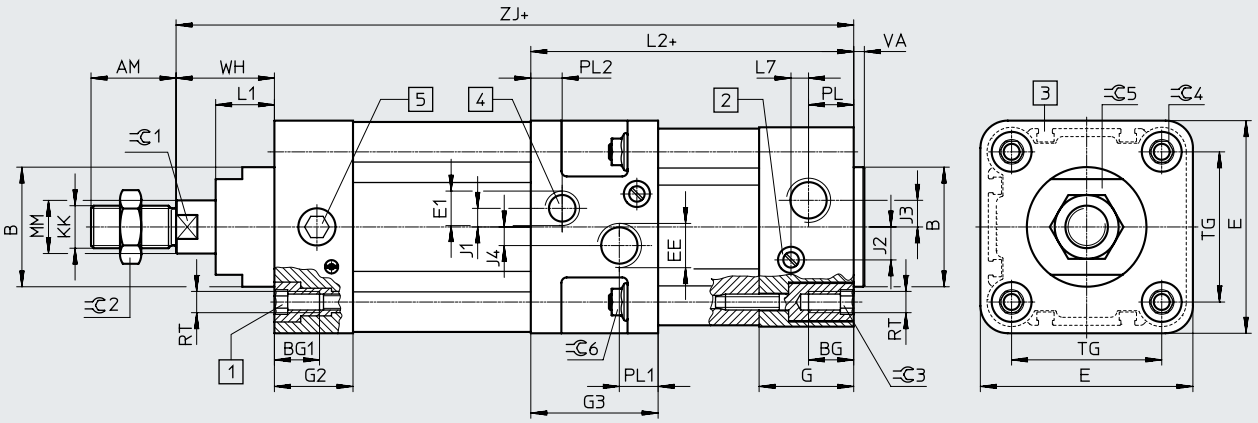

[1] Socket head screw with female thread for mounting components
[2] Adjusting screw for adjustable end-position cushioning
[3] Sensor slot for proximity switch
[4] Connection to release clamping function
[5] Locking screw
+ = plus stroke length

ø [mm]	AM	B ø d11	BG	BG1	E	EE	E1	G	G2	G3	J1
40	24	35	16	15	54	G1/4	G1/8	28.8	22	49.6	2
63	32	45	17	17	80	G3/8	G1/4	34.3	29.5	47.9	7
100	42	55	17	17	126	G1/2	G3/8	38	32.5	46.7	15

ø [mm]	J2	J3	J4	KK	L1	L2	L7	MM ø	PL	PL1	PL2
40	8	6	0	M12x1.25	17.9	114.5	3.6	16	14	21.3	9
63	12.4	10	7	M16x1.5	22.1	121.5	6.6	20	17	14.6	11.8
100	12	10	10	M20x1.5	29.2	131.5	8	25	18.8	16.4	14.4

ø [mm]	RT	TG	VA	WH	ZJ	⌀1	⌀2	⌀3	⌀4	⌀5	⌀6
40	M6	38	4	30	277	13	19	6	6	30	8
63	M8	56.5	4	37	315	17	24	8	8	36	10
100	M10	89	4	51	408	22	30	6	10	41	13

Note: This product conforms to ISO 1179-1 and ISO 228-1.

Ordering data

Piston diameter [mm]	Stroke [mm]	Part no.	Type
40	10 ... 2000	**538239**	**DNCKE-40-...-PPV-A-S**
63	10 ... 2000	**538240**	**DNCKE-63-...-PPV-A-S**
100	10 ... 2000	**538241**	**DNCKE-100-...-PPV-A-S**

Accessories

Foot mounting HNC

Material:
Galvanised steel
Free of copper and PTFE

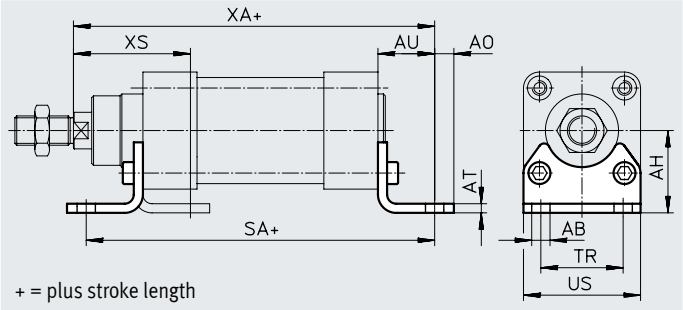

Dimensions and ordering data

For diam. [mm]	AB ø	AH	AO	AT	AU	SA	TR	US	XA	XS	CRC[1]	Weight [g]	Part no.	Type
40	10	36	9	4	28	303	36	54	305	53	2	193	**174370**	**HNC-40**
63	10	50	12.5	5	32	342	50	75	347	63	2	436	**174372**	**HNC-63**
100	14.5	71	17.5	6	41	439	75	110	449	86	2	1009	**174374**	**HNC-100**

1) Corrosion resistance class CRC 2 to Festo standard FN 940070
Moderate corrosion stress. Indoor applications in which condensation can occur. External visible parts with primarily decorative surface requirements which are in direct contact with a normal industrial environment.

Flange mounting FNC

Material:
Galvanised steel
Free of copper and PTFE
RoHS-compliant

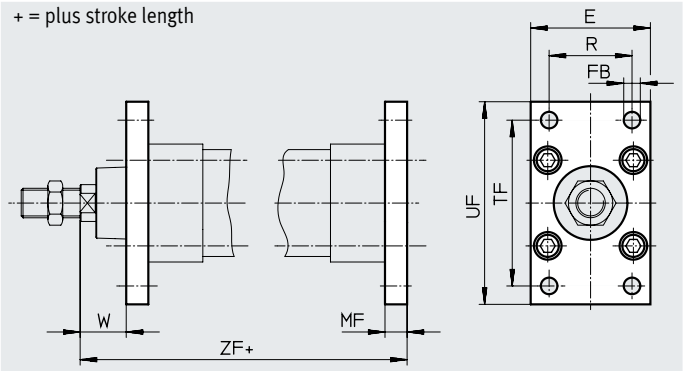

Dimensions and ordering data

For diam. [mm]	E	FB ø H13	MF	R	TF	UF	W	ZF	CRC[1]	Weight [g]	Part no.	Type
40	54	9	10	36	72	90	20	287	1	291	**174377**	**FNC-40**
63	75	9	12	50	100	120	25	327	1	679	**174379**	**FNC-63**
100	110	14	16	75	150	175	35	424	1	2041	**174381**	**FNC-100**

1) Corrosion resistance class CRC 1 to Festo standard FN 940070
Low corrosion stress. Dry internal application or transport and storage protection. Also applies to parts behind coverings, in the non-visible interior area, and parts which are covered in the application (e.g. drive trunnions).

Accessories

Trunnion flange ZNCF

Material:
Stainless steel casting
Free of copper and PTFE
RoHS-compliant

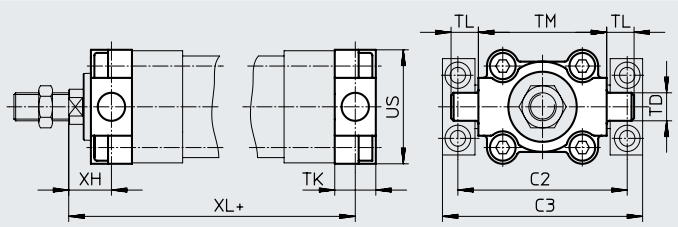

+ = plus stroke length

Dimensions and ordering data

For diam. [mm]	C2	C3	TD ø e9	TK	TL	TM	US	XH	XL	CRC[1]	Weight [g]	Part no.	Type
40	87	105	16	20	16	63	54	20	287	2	285	**174412**	**ZNCF-40**
63	116	136	20	24	20	90	75	25	327	2	687	**174414**	**ZNCF-63**
100	164	189	25	38	25	132	110	32	427	2	2254	**174416**	**ZNCF-100**

1) Corrosion resistance class CRC 2 to Festo standard FN 940070
Moderate corrosion stress. Indoor applications in which condensation can occur. External visible parts with primarily decorative surface requirements which are in direct contact with a normal industrial environment.

Trunnion flange kit DAMT

The kit can be attached at any position along the profile barrel of the cylinder.
Material:
Galvanised steel
Free of copper and PTFE
RoHS-compliant

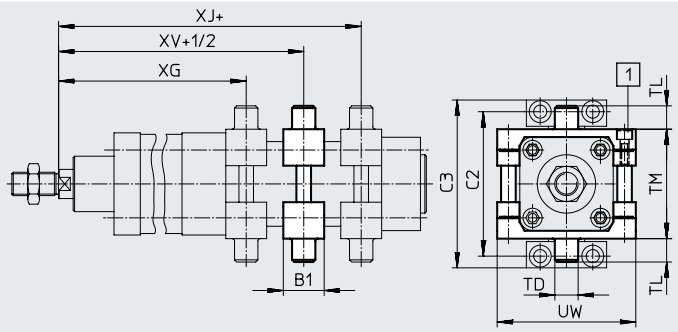

+ = plus stroke length
+1/2 = plus half stroke length
[1] Max. tightening torque

Dimensions and ordering data

For diam. [mm]	B1	C2	C3	TD ø e9	TL	TM	UW
40	32	87	105	16	16	63	75
63	41	116	136	20	20	90	105
100	48	164	189	25	25	132	145

For diam. [mm]	XG	XJ	XV	Max. tightening torque [Nm]	CRC[1]	Weight [g]	Part no.	Type
40	228.1	232.2	230.2	8+1	1	388	**2214899**	**DAMT-V1-40-A**
63	261.9	260.2	261	18+2	1	911	**2214971**	**DAMT-V1-63-A**
100	347.2	346	346.6	28+2	1	2095	**163530**	**DAMT-V1-100-A**

1) Corrosion resistance class CRC 1 to Festo standard FN 940070
Low corrosion stress. Dry internal application or transport and storage protection. Also applies to parts behind coverings, in the non-visible interior area, and parts which are covered in the application (e.g. drive trunnions).

Accessories

Trunnion support LNZG

Material:
Trunnion support: Anodised aluminium
Plain bearing: Plastic
Free of copper and PTFE
RoHS-compliant

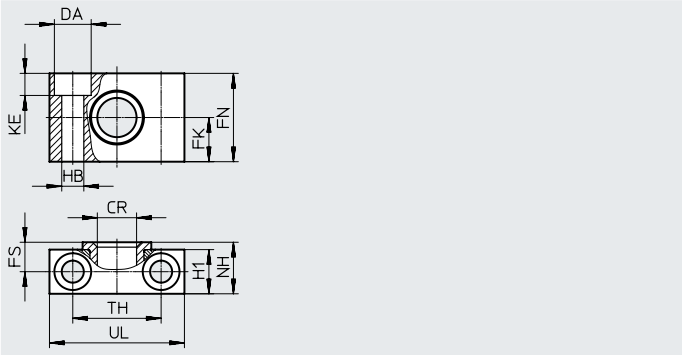

Dimensions and ordering data

For diam. [mm]	CR ø D11	DA ø H13	FK ø ±0.1	FN	FS	H1	HB ø H13	KE	NH	TH ±0.2	UL	CRC[1]	Weight [g]	Part no.	Type
40	16	15	18	36	12	18	9	9	21	36	55	2	129	**32960**	**LNZG-4 0/50**
63	20	18	20	40	13	20	11	11	23	42	65	2	178	**32961**	**LNZG-6 3/80**
100	25	20	25	50	16	24.5	14	13	28.5	50	75	2	306	**32962**	**LNZG-10 0/125**

1) Corrosion resistance class CRC 2 to Festo standard FN 940070
Moderate corrosion stress. Indoor applications in which condensation can occur. External visible parts with primarily decorative surface requirements which are in direct contact with a normal industrial environment.

Swivel flange SNC

Material:
Die-cast aluminium
Free of copper and PTFE
RoHS-compliant

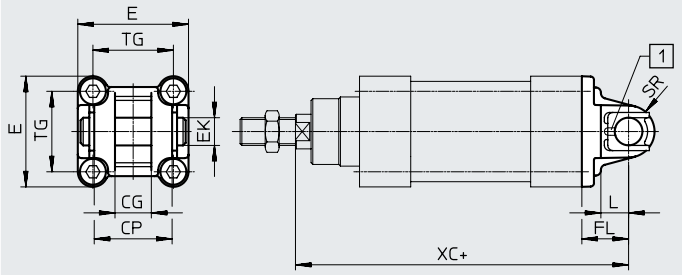

+ = plus stroke length
[1] The pivot pin is secured against rotation with a spring pin

Dimensions and ordering data

For diam. [mm]	CG H14	CP h14	E	EK ø h9	FL ±0.2	L	SR	TG	XC	CRC[1]	Weight [g]	Part no.	Type
40	16	40	$54_{-0.5}$	12	25	16	12	38	302	1	140	**174384**	**SNC-40**
63	21	51	$75_{-0.6}$	16	32	21	16	56.5	347	1	331	**174386**	**SNC-63**
100	25	75	$110_{+0.3/-0.8}$	20	41	27	20	89	449	1	865	**174388**	**SNC-100**

1) Corrosion resistance class CRC 1 to Festo standard FN 940070
Low corrosion stress. Dry internal application or transport and storage protection. Also applies to parts behind coverings, in the non-visible interior area, and parts which are covered in the application (e.g. drive trunnions).

Accessories

Swivel flange SNCB

Material:
Die-cast aluminium
Free of copper and PTFE
RoHS-compliant

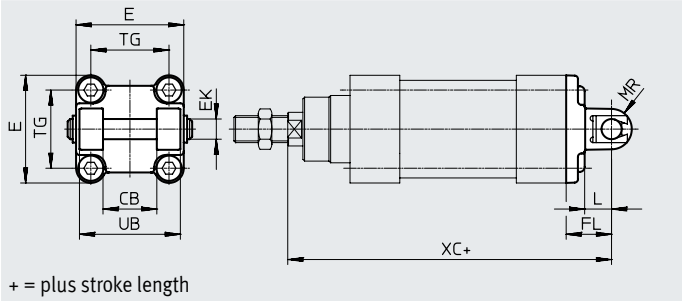

Dimensions and ordering data

For diam. [mm]	CB H14	E	EK ø e8	FL ±0.2	L	MR	TG	UB h14	XC	CRC[1]	Weight [g]	Part no.	Type
40	28	$54_{-0.5}$	12	25	16	12	38	52	302	1	155	**174391**	**SNCB-40**
63	40	$75_{-0.6}$	16	32	21	16	56.5	70	347	1	375	**174393**	**SNCB-63**
100	60	$110_{+0.3/-0.8}$	20	41	27	20	89	110	449	1	1035	**174395**	**SNCB-100**

1) Corrosion resistance class CRC 1 to Festo standard FN 940070
Low corrosion stress. Dry internal application or transport and storage protection. Also applies to parts behind coverings, in the non-visible interior area, and parts which are covered in the application (e.g. drive trunnions).

Swivel flange SNCS

Material:
SNCS 40:
Die-cast aluminium
SNCS 63 ... 100:
Wrought aluminium alloy
Free of copper and PTFE
RoHS-compliant

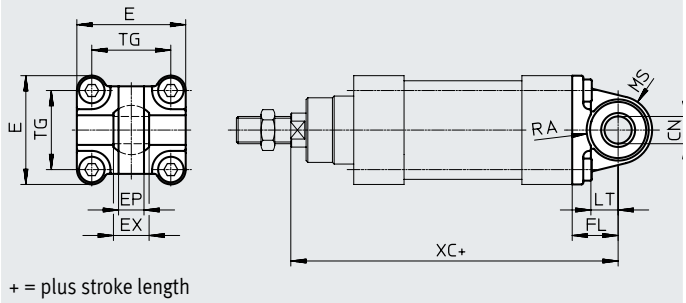

Dimensions and ordering data

For diam. [mm]	CN ø	E	EP ±0.2	EX	FL ±0.2	LT	MS	RA +1	TG	XC	CRC[1]	Weight [g]	Part no.	Type
40	$12^{+0.015}$	$54_{-0.5}$	12	16	25	16	$17^{+0.5}$	17.5	38	302	1	122	**174398**	**SNCS-40**
63	$16^{+0.015}$	74.5±0.5	15	21	32	21	$23_{-0.5}$	23	56.5	347	2	281	**174400**	**SNCS-63**
100	$20^{+0.018}$	109+1/−0.7	18	25	41	27	30±0.5	95	89	449	2	683	**174402**	**SNCS-100**

1) Corrosion resistance class CRC 1 to Festo standard FN 940070
Low corrosion stress. Dry internal application or transport and storage protection. Also applies to parts behind coverings, in the non-visible interior area, and parts which are covered in the application (e.g. drive trunnions).
Corrosion resistance class CRC 2 to Festo standard FN 940070
Moderate corrosion stress. Indoor applications in which condensation can occur. External visible parts with primarily decorative surface requirements which are in direct contact with a normal industrial environment.

Accessories

Swivel flange SNCL

Material:
Die-cast aluminium
Free of copper and PTFE
RoHS-compliant

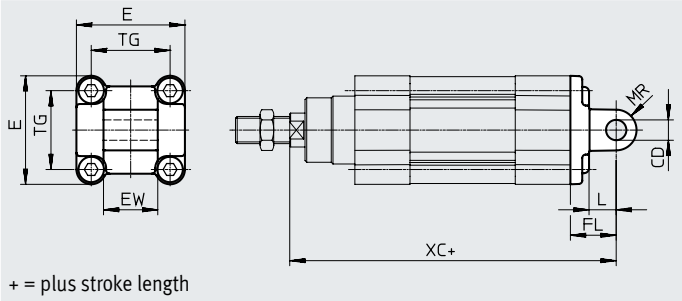

Dimensions and ordering data

For diam. [mm]	CD ⌀ H9	E	EW −0.2/−0.6	FL ±0.2	L	MR	TG	XC	CRC[1]	Weight [g]	Part no.	Type
40	12	$54_{-0.5}$	28	25	16	12	38	302	1	95	**174405**	**SNCL-40**
63	16	$75_{-0.6}$	40	32	21	16	56.5	347	1	225	**174407**	**SNCL-63**
100	20	$110_{+0.3/-0.8}$	60	41	27	20	89	449	1	606	**174409**	**SNCL-100**

1) Corrosion resistance class CRC 1 to Festo standard FN 940070
Low corrosion stress. Dry internal application or transport and storage protection. Also applies to parts behind coverings, in the non-visible interior area, and parts which are covered in the application (e.g. drive trunnions).

Ordering data – Mounting attachments

Data sheets → Internet: clevis foot

Designation	For diam.	Part no.	Type
Clevis foot LNG			
	40	**33891**	**LNG-40**
	63	**33893**	**LNG-63**
	100	**33895**	**LNG-100**
Clevis foot LSNG			
	40	**31741**	**LSNG-40**
	63	**31743**	**LSNG-63**
	100	**31745**	**LSNG-100**
Clevis foot LBG			
	40	**31762**	**LBG-40**
	63	**31764**	**LBG-63**
	100	**31766**	**LBG-100**

Designation	For diam.	Part no.	Type
Clevis foot LSN			
	40	**5562**	**LSN-40**
	63	**5564**	**LSN-63**
	100	**5566**	**LSN-100**
Clevis foot LSNSG			
	40	**31748**	**LSNSG-40**
	63	**31750**	**LSNSG-63**
	100	**31752**	**LSNSG-100**
Right-angle clevis foot LQG			
	40	**31769**	**LQG-40**
	63	**31771**	**LQG-63**
	100	**31773**	**LQG-100**

Accessories

Ordering data – Piston rod attachments

Data sheets → Internet: piston rod attachment

Designation	For diam.	Part no.	Type
Rod eye SGS			
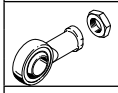	40	**9262**	**SGS-M12x1.25**
	63	**9263**	**SGS-M16x1.5**
	100	**9264**	**SGS-M20x1.5**
Rod clevis SG			
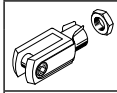	40	**6145**	**SG-M12x1.25**
	63	**6146**	**SG-M16x1.5**
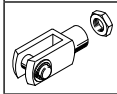	100	**6147**	**SG-M20x1.5**
Coupling piece KSG			
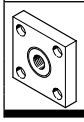	40	**32964**	**KSG-M12x1.25**
	63	**32965**	**KSG-M16x1.5**
	100	**32966**	**KSG-M20x1.5**

Designation	For diam.	Part no.	Type
Rod clevis SGA			
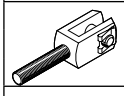	40	**10767**	**SGA-M12x1.25**
	63	**10768**	**SGA-M16x1.5**
	100	**10769**	**SGA-M20x1.5**
Self-aligning rod coupler FK			
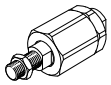	40	**6141**	**FK-M12x1.25**
	63	**6142**	**FK-M16x1.5**
	100	**6143**	**FK-M20x1.5**

Ordering data – Guide units for fixed strokes (recirculating ball bearing guide only)

Data sheets → Internet: feng

	Stroke [mm]	Part no.	Type
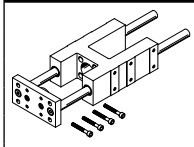	**For diam. 40 mm**		
	10 … 50	**34499**	**FENG-40-50-KF**
	10 … 100	**34500**	**FENG-40-100-KF**
	10 … 160	**34501**	**FENG-40-160-KF**
	10 … 200	**34502**	**FENG-40-200-KF**
	10 … 250	**34503**	**FENG-40-250-KF**
	10 … 320	**34504**	**FENG-40-320-KF**
	10 … 400	**150291**	**FENG-40-400-KF**
	10 … 500	**34505**	**FENG-40-500-KF**
	For diam. 100 mm		
	10 … 50	**34529**	**FENG-100-50-KF**
	10 … 100	**34530**	**FENG-100-100-KF**
	10 … 160	**34531**	**FENG-100-160-KF**
	10 … 200	**34532**	**FENG-100-200-KF**
	10 … 250	**34533**	**FENG-100-250-KF**
	10 … 320	**34534**	**FENG-100-320-KF**
	10 … 400	**34535**	**FENG-100-400-KF**
	10 … 500	**34536**	**FENG-100-500-KF**

Stroke [mm]	Part no.	Type
For diam. 63 mm		
10 … 50	**34513**	**FENG-63-50-KF**
10 … 100	**34514**	**FENG-63-100-KF**
10 … 160	**34515**	**FENG-63-160-KF**
10 … 200	**34516**	**FENG-63-200-KF**
10 … 250	**34517**	**FENG-63-250-KF**
10 … 320	**34518**	**FENG-63-320-KF**
10 … 400	**34519**	**FENG-63-400-KF**
10 … 500	**34520**	**FENG-63-500-KF**

Ordering data – Guide units for variable strokes

Data sheets → Internet: feng

	For diam. [mm]	Stroke [mm]	With recirculating ball bearing guide Part no.	Type	With plain-bearing guide Part no.	Type
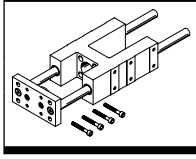	40	10 … 500	**34488**	**FENG-40-…-KF**	**34482**	**FENG-40-…-GF**
	63	10 … 500	**34490**	**FENG-63-…-KF**	**34484**	**FENG-63-…-GF**
	100	10 … 500	**34492**	**FENG-100-…-KF**	**34486**	**FENG-100-…-GF**

Accessories

Ordering data – Mounting kits for proximity switches SMT-8

Data sheets → Internet: smb

	For diam. [mm]	Part no.	Type
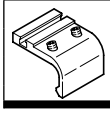	40	**175705**	**SMB-8-FENG-32/40**
	63	**175706**	**SMB-8-FENG-50/63**
	100	**175707**	**SMB-8-FENG-80/100**

Ordering data – Proximity switches for T-slot, magneto-resistive

Data sheets → Internet: smt

	Type of mounting	Switching output	Electrical connection	Cable length [m]	Part no.	Type
N/O contact						
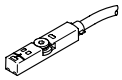	Inserted in the slot from above, flush with the cylinder profile, short design	PNP	Cable, 3-wire	2.5	**574335**	**SMT-8M-A-PS-24V-E-2,5-OE**
			Plug M8x1, 3-pin	0.3	**574334**	**SMT-8M-A-PS-24V-E-0.3-M8D**
			Plug M12x1, 3-pin	0.3	**574337**	**SMT-8M-A-PS-24V-E-0.3-M12**
		NPN	Cable, 3-wire	2.5	**574338**	**SMT-8M-A-NS-24V-E-2,5-OE**
			Plug M8x1, 3-pin	0.3	**574339**	**SMT-8M-A-NS-24V-E-0.3-M8D**
N/C contact						
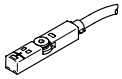	Inserted in the slot from above, flush with the cylinder profile, short design	PNP	Cable, 3-wire	7.5	**574340**	**SMT-8M-A-PO-24V-E-7.5-OE**

Ordering data – Proximity switches for T-slot, magnetic reed

Data sheets → Internet: sme

	Type of mounting	Switching output	Electrical connection	Cable length [m]	Part no.	Type
N/O contact						
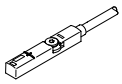	Inserted in the slot from above, flush with the cylinder profile	Contacting	Cable, 3-wire	2.5	**543862**	**SME-8M-DS-24V-K-2,5-OE**
				5.0	**543863**	**SME-8M-DS-24V-K-5.0-OE**
			Cable, 2-wire	2.5	**543872**	**SME-8M-ZS-24V-K-2,5-OE**
			Plug M8x1, 3-pin	0.3	**543861**	**SME-8M-DS-24V-K-0,3-M8D**
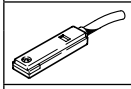	Inserted in the slot lengthwise, flush with the cylinder profile	Contacting	Cable, 3-wire	2.5	**150855**	**SME-8-K-LED-24**
			Plug M8x1, 3-pin	0.3	**150857**	**SME-8-S-LED-24**
N/C contact						
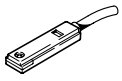	Inserted in the slot lengthwise, flush with the cylinder profile	Contacting	Cable, 3-wire	7.5	**160251**	**SME-8-O-K-LED-24**

Accessories

Ordering data – Connecting cables

Data sheets → Internet: nebu

	Electrical connection, left	Electrical connection, right	Cable length [m]	Part no.	Type
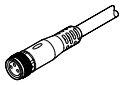	Straight socket, M8x1, 3-pin	Cable, open end, 3-wire	2.5	**541333**	**NEBU-M8G3-K-2.5-LE3**
			5	**541334**	**NEBU-M8G3-K-5-LE3**
	Straight socket, M12x1, 5-pin	Cable, open end, 3-wire	2.5	**541363**	**NEBU-M12G5-K-2.5-LE3**
			5	**541364**	**NEBU-M12G5-K-5-LE3**
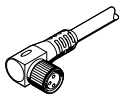	Angled socket, M8x1, 3-pin	Cable, open end, 3-wire	2.5	**541338**	**NEBU-M8W3-K-2.5-LE3**
			5	**541341**	**NEBU-M8W3-K-5-LE3**
	Angled socket, M12x1, 5-pin,	Cable, open end, 3-wire	2.5	**541367**	**NEBU-M12W5-K-2.5-LE3**
			5	**541370**	**NEBU-M12W5-K-5-LE3**

Ordering data – Slot cover for T-slot

	Mounting	Length [m]	Part no.	Type
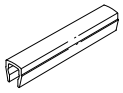	Insertable	2x 0.5	**151680**	**ABP-5-S**

Ordering data – One-way flow control valves

Data sheets → Internet: grla

	Connection Thread	For tubing O.D.	Material	Part no.	Type
	G1/8	3	Metal version	**193142**	**GRLA-1/8-QS-3-D**
		4		**193143**	**GRLA-1/8-QS-4-D**
		6		**193144**	**GRLA-1/8-QS-6-D**
		8		**193145**	**GRLA-1/8-QS-8-D**
	G1/4	6		**193146**	**GRLA-1/4-QS-6-D**
		8		**193147**	**GRLA-1/4-QS-8-D**
		10		**193148**	**GRLA-1/4-QS-10-D**
	G3/8	6		**193149**	**GRLA-3/8-QS-6-D**
		8		**193150**	**GRLA-3/8-QS-8-D**
		10		**193151**	**GRLA-3/8-QS-10-D**
	G1/2	12		**193152**	**GRLA-1/2-QS-12-D**