FESTO

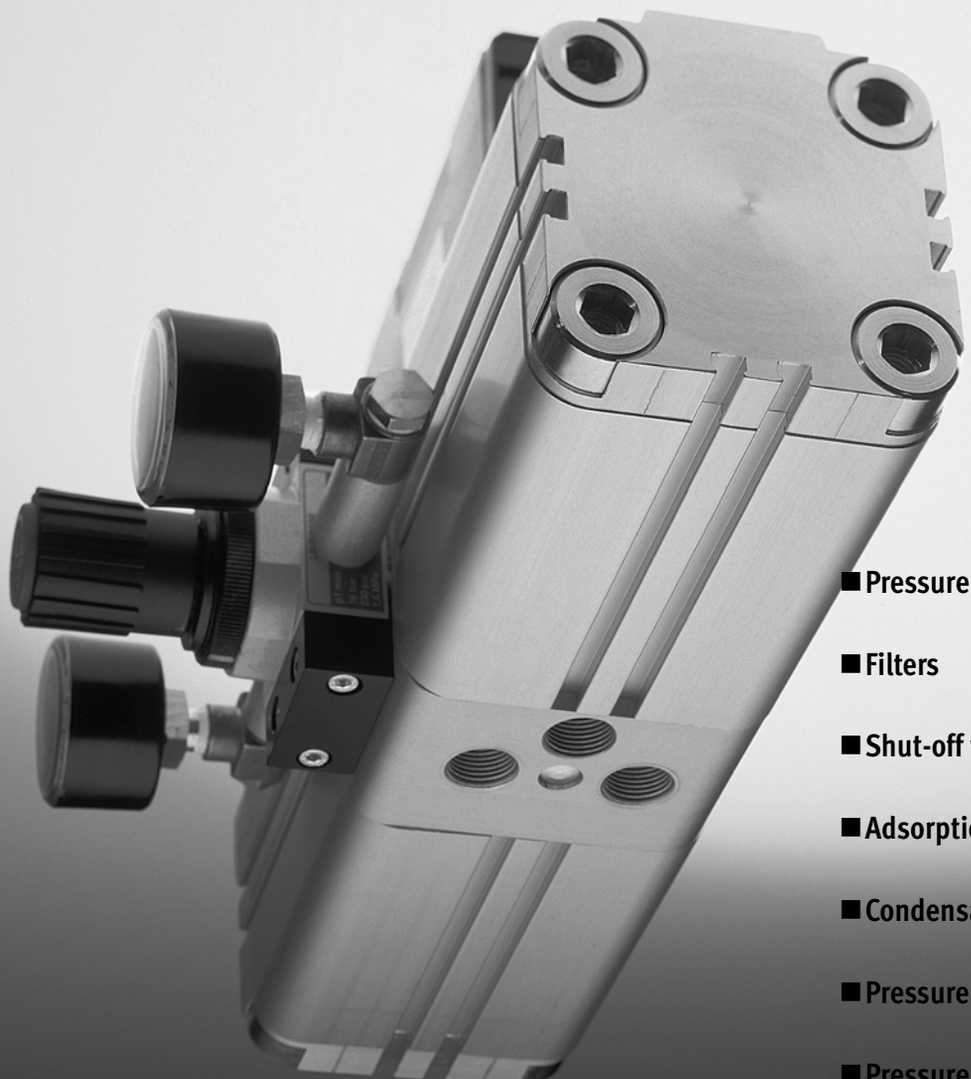

- Pressure regulators
- Filters
- Shut-off valves
- Adsorption dryers
- Condensate drains
- Pressure boosters
- Pressure gauges

Individual devices

Product range overview

FESTO

Type		Pneumatic connection				Pressure regulation range [bar]						Input pressure [bar]				➔ Page
		G⅛	G¼	G⅜	G½	0.05 ... 7	0.05 ... 2.5	0.05 ... 4	0.1 ... 10	0.5 ... 7	0.5 ... 12	1 ... 20	1 ... 12	2 ... 8	2 ... 10	
Pressure regulators **LR**		■	–	–	–	–	–	–	–	■	■	■	–	–	–	3 / 4.1-0
Precision pressure regulators **LRP**		–	■	–	–	■	■	■	■	–	–	–	■	–	–	3 / 4.2-0
Pressure boosters **DPA**	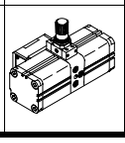	–	–	■	■	–	–	–	–	–	–	–	–	■	■	3 / 4.7-0

Type		Pneumatic connection					Input pressure [bar]		Grade of filtration [µm]		Condensate drain		Supply voltage			➔ Page
		G¼	G⅜	G½	G¾	G1	0 ... 16	4 ... 10.5	0.01	1	manual rotary	fully automatic	24 V DC	110 V AC	230 V AC	
Fine and micro filters **LFMB-H/LFMA-H**		–	–	■	■	■	■	–	■	■	–	■	–	–	–	3 / 4.3-0
Filter combination **LFMBA-H**	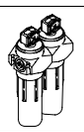	–	–	■	■	■	■	–	■	■	–	■	–	–	–	3 / 4.3-5
Adsorption dryer **LDF**	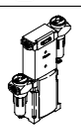	■	–	■	–	–	–	■	–	–	–	–	■	■	■	3 / 4.5-1
Filter silencer **LFU**		■	■	■	–	■	■	–	–	–	■	–	–	–	–	3 / 4.3-11
Shut-off valve **HE-LO**	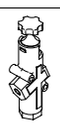	–	■	■	■	■	–	–	–	–	–	–	–	–	–	3 / 4.4-0

Individual devices

Product range overview

FESTO

Type		Pneumatic connection		Operating pressure [bar]			Nominal operating voltage			➔ Page
		G¼	G½	0 … 14	0.8 … 16	4 … 16	24 V DC	110 V AC	230 V AC	
Condensate drain **WA**	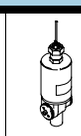	■	–	■	–	■	–	–	–	3 / 4.6-1
Condensate drain **PWEA**		–	■	–	■	–	■	■	■	3 / 4.6-4

Type		Pneumatic connection								Nominal size						Display unit			Red-green range	➔ Page
		M5	R⅛	R¼	G⅛	G¼	QS4	QS6	QS8	15	23	27	40	50	63	bar	MPa	psi		
Pressure gauge DIN EN 837-1 **MA-…-EN**		–	■	■	–	■	–	–	–	–	–	–	■	■	■	■	–	■	–	3 / 4.8-1
Pressure gauge DIN EN 837-1 **MA-…-RG**		–	■	■	–	–	–	–	–	–	–	–	■	■	■	■	■	■	■	3 / 4.8-4
Pressure gauge **MA**		■	■	–	■	■	–	–	–	–	■	■	■	■	■	■	■	■	–	3 / 4.8-6
Precision pressure gauge DIN EN 837-1 **MAP-…-EN**		–	■	–	–	–	–	–	–	–	–	–	■	–	–	■	–	■	–	3 / 4.8-9
Pressure gauge **MA-…-QS**		–	–	–	–	–	■	■	■	■	–	–	–	–	–	■	–	–	–	3 / 4.8-10
Flanged pressure gauge DIN EN 837-1 **FMA-…-EN**		–	–	–	–	■	–	–	–	–	–	–	■	■	■	■	–	■	–	3 / 4.8-11
Flanged pressure gauge **FMA**		–	–	–	–	■	–	–	–	–	–	–	–	–	■	■	–	■	–	3 / 4.8-13
Precision flanged pressure gauge DIN EN 837-1 **FMAP-…-EN**		–	–	–	–	■	–	–	–	–	–	–	–	–	■	■	–	■	–	3 / 4.8-14

Pressure regulators LR/LRS

Peripherals overview and type codes

FESTO

Peripherals overview

Pressure regulator LR	Pressure regulator LRS, lockable

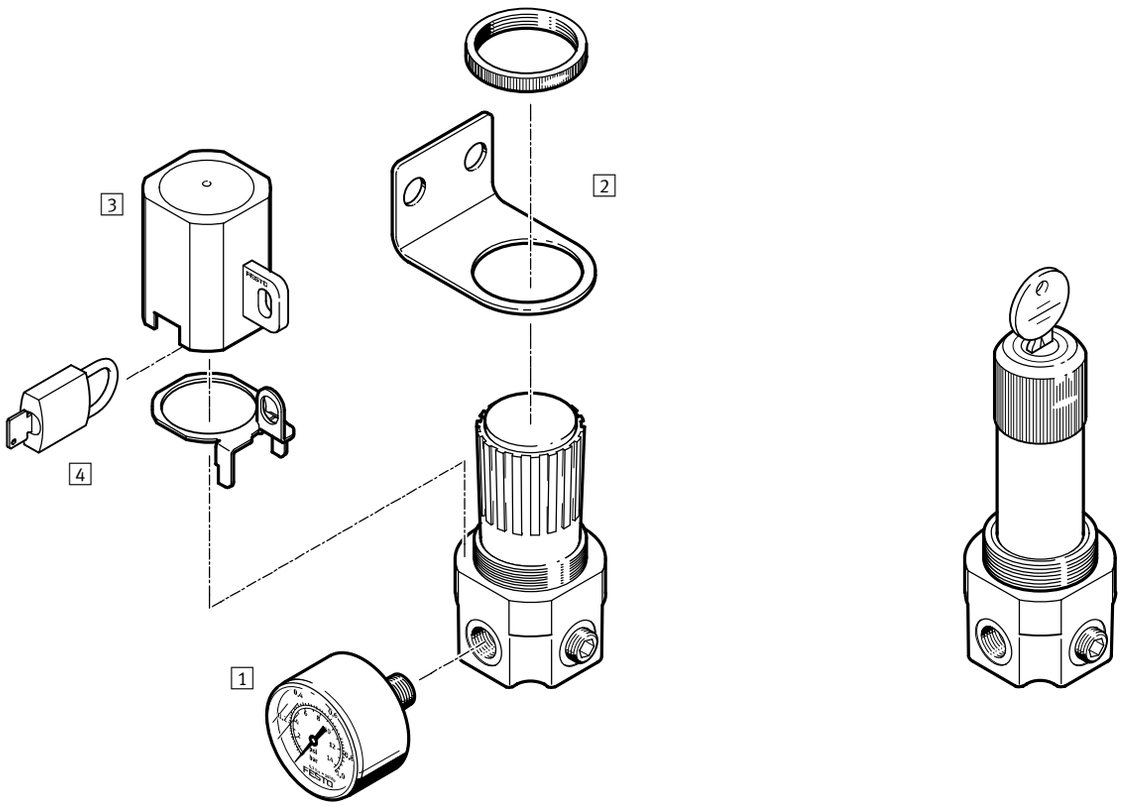

Mounting attachments and accessories	Brief description	➔ Page
1 Pressure gauge MA	The pressure gauges measure pressure in bar and the psi display range or in MPa	3 / 4.8-1
2 Mounting bracket HR-D	For wall mounting	3 / 4.1-5
3 Regulator lock LRVS-G-⅛ with lock plate	Prevents unintentional, and in conjunction with an LRVS padlock, unauthorised adjustment of the rotary knob	3 / 4.1-5
4 Padlock LRVS-D	Accessory for LRVS	3 / 4.1-5

Type codes

LR	–	⅛	–	G	–	7

Service function	
LR	Pressure regulator
LRS	Pressure regulator, lockable

Pneumatic connection	
⅛	Thread G⅛

Version code	
G	Version code

Pressure regulation range	
7	0.5 ... 7 bar
	0.5 ... 12 bar

Pressure regulators LR/LRS

Technical data

FESTO

Function

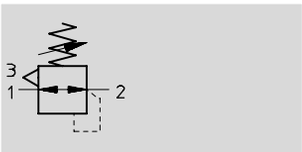

Flow rate
600 ...700 l/min

Temperature range
–10 ... +80 °C

Input pressure
1 ... 20 bar

The pressure regulator is free of paint-wetting impairment substances.

- Larger design (brass housing)
- Good flow rate performance
- Precise diaphragm regulator
- Detenting regulator knob
- Identical mounting backet to D series
- Suitable for input pressures up to p1 = 20 bar
- 2 pressure regulation ranges: 0.5 ... 7 bar and 0.5 ... 12 bar

The pressure regulator maintains an essentially constant working pressure at the regulator outlet, regardless of pressure fluctuations in the compressed air network. The regulated operating pressure can be reduced by means of the built-in secondary exhaust, even without compressed air consumers.

The pressure regulator is available in two design variants:

- LR(S)-⅛-G for standard applications.
- LR(S)-⅛-G-7 for special individual cases, e.g. regulators in the pressure range up to 7 bar. This variant demonstrates optimal flow and control characteristics.

Panel mounting

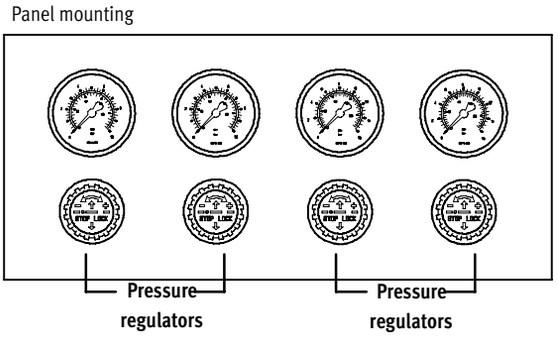

Pressure regulation range
0.5 ... 7 bar

Pressure regulation range
0.5 ... 12 bar

General technical data			
Type		LR(S)-⅛-G	LR(S)-⅛-G-7
Pneumatic connection		G⅛	
Operating medium		Filtered compressed air, lubricated or unlubricated (grade of filtration ≤40 µm)	
Design		Input pressure compensated diaphragm pressure regulator with secondary exhaust	
Type of mounting		Via accessories	
		Front panel mounting, installation hole ∅ 36.5 mm	
Mounting position		Any	
Max. hysteresis	[bar]	0.2	
Input pressure	[bar]	1 ... 20	
Pressure regulation range	[bar]	0.5 ... 12	0.5 ... 7

Standard nominal flow rate[1] qnN [l/min]	
Pressure regulation range 0.5 ... 7 bar	700
Pressure regulation range 0.5 ... 12 bar	600

1) With 10 bar input pressure, 6 bar working pressure and Δp = 1 bar.

Pressure regulators LR/LRS

Technical data

Ambient conditions		
Ambient temperature	[°C]	–10 ... +80
Corrosion resistance	CRC[1)]	2

1) Corrosion resistance class 2 according to Festo standard 940 070
Components requiring moderate corrosion resistance. Externally visible parts with primarily decorative surface requirements which are in direct contact with a surrounding industrial atmosphere or media such as cooling or lubricating agents.

Weights [g]		
	LR	LRS
Pressure regulator	320	420

Materials

Sectional view

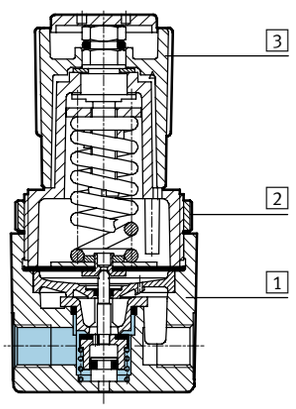

Pressure regulator		
1	Housing	Brass
2	Knurled nut	Aluminium
3	Rotary knob	LR: Polyacetate
		LRS: Aluminium
–	Seals	Nitrile rubber

Primary pressure compensation –
Primary pressure p1 as a function of output pressure p2

LR(S)-⅛-G(-7)

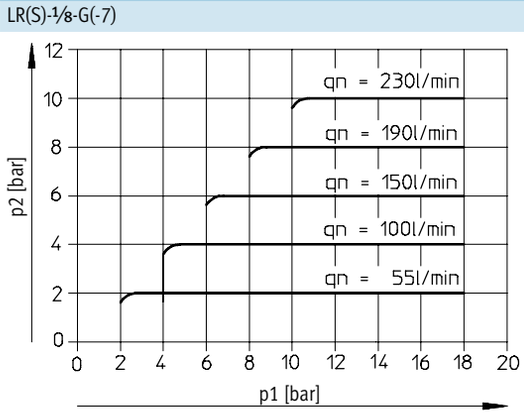

Secondary venting –
Output pressure p2 as a function of standard flow rate qn

LR(S)-⅛-G(-7)

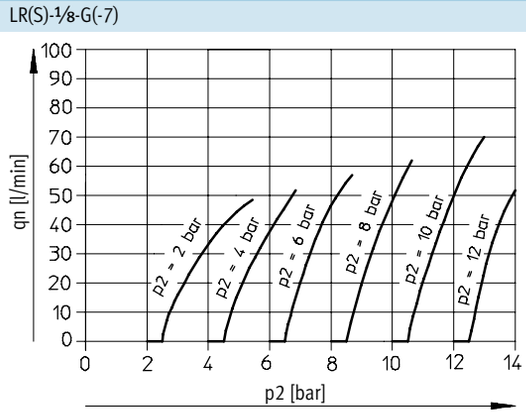

FESTO

Standard flow rate qn as a function of the output pressure p2

LR(S)-⅛-G

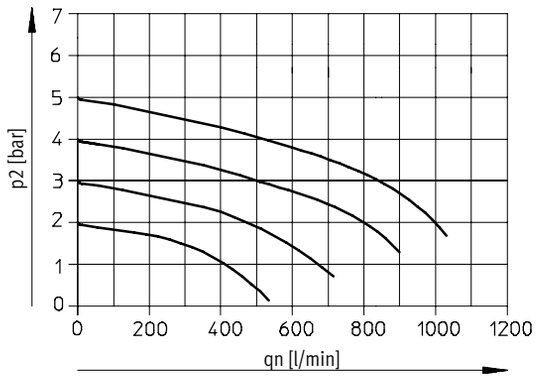

Primary pressure p1 = 7 bar

LR(S)-⅛-G-7

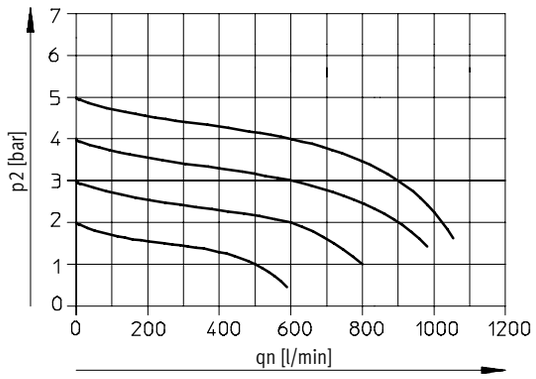

Primary pressure p1 = 7 bar

LR(S)-⅛-G

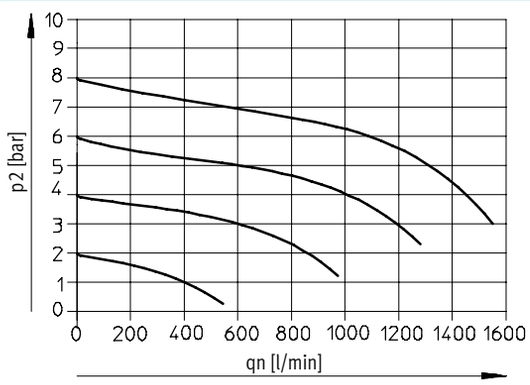

Primary pressure p1 = 10 bar

LR(S)-⅛-G-7

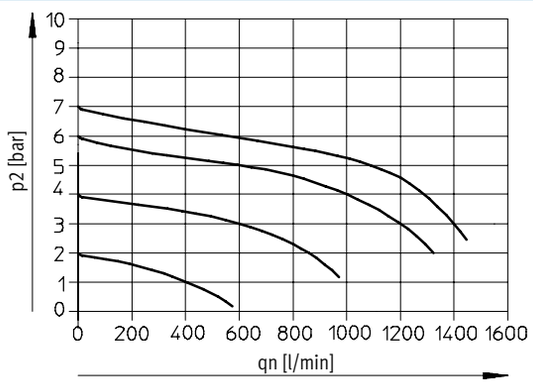

Primary pressure p1 = 10 bar

LR(S)-⅛-G

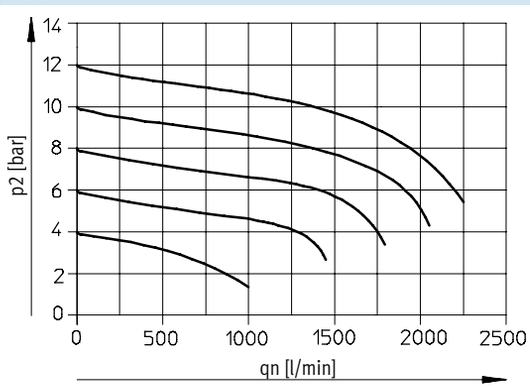

Primary pressure p1 = 14 bar

LR(S)-⅛-G-7

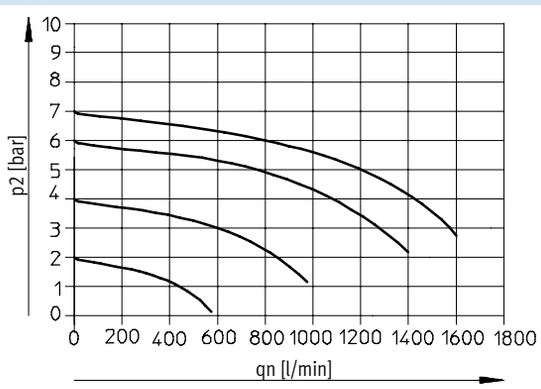

Primary pressure p1 = 14 bar

Pressure regulators LR/LRS

Technical data

FESTO

Dimensions Download CAD data ➔ **www.festo.com/en/engineering**

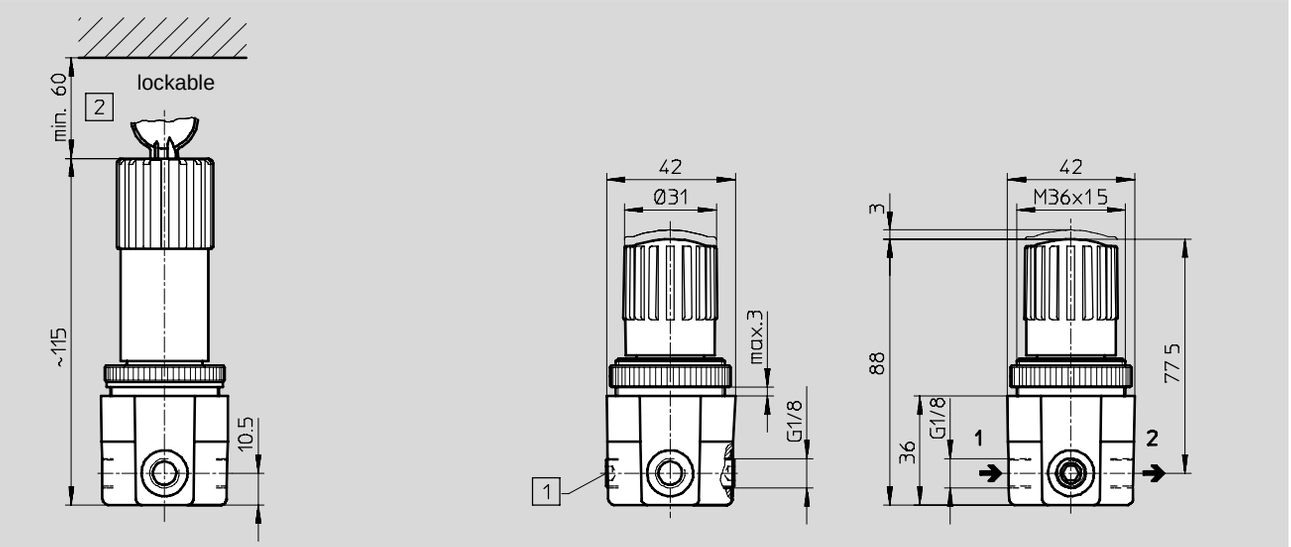

1 Second pressure gauge connection

2 Installation dimensions

➔ Flow direction

Ordering data				
Connection	Pressure regulation range 0.5 ... 7 bar		Pressure regulation range 0.5 ... 12 bar	
	Part No.	Type	Part No.	Type
G⅛	**159 506**	**LR-⅛-G-7**	**159 505**	**LR-⅛-G**
lockable				
G⅛	**194 695**	**LRS-⅛-G-7**	**194 694**	**LRS-⅛-G**

FESTO

Mounting bracket HR-D
for wall mounting

Material:
Galvanised steel

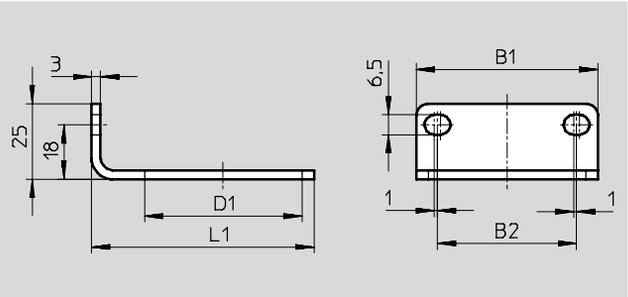

Ordering data						
Type	B1	B2	D1 ∅	L1	Part No.	Type
Mounting bracket	42	28	36	57.5	**164 936**	**HR-D-MINI**

Regulator lock LRVS

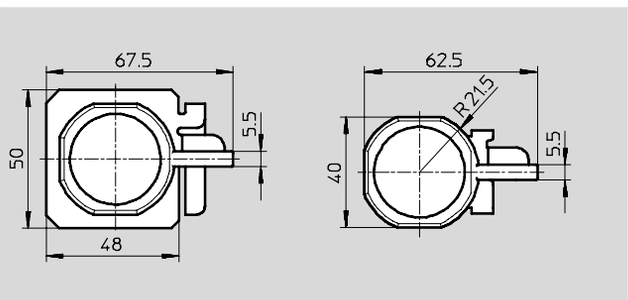

Ordering data				
	Connection	Weight [g]	Part No.	Type
Regulator lock	G⅛	36	**196 080**	**LRVS-G-⅛**

Padlock LRVS-D

Material:
Housing: Brass

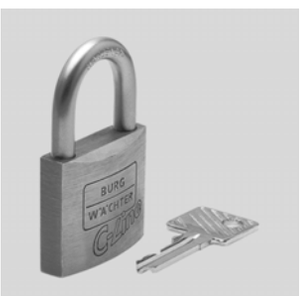

Ordering data			
	Weight [g]	Part No.	Type
Padlock	120	**193 786**	**LRVS-D**

Core Range

Precision pressure regulators LRP/LRPS

Peripherals overview and type codes

FESTO

Peripherals overview

Precision pressure regulator LRP	Precision pressure regulator LRPS, lockable

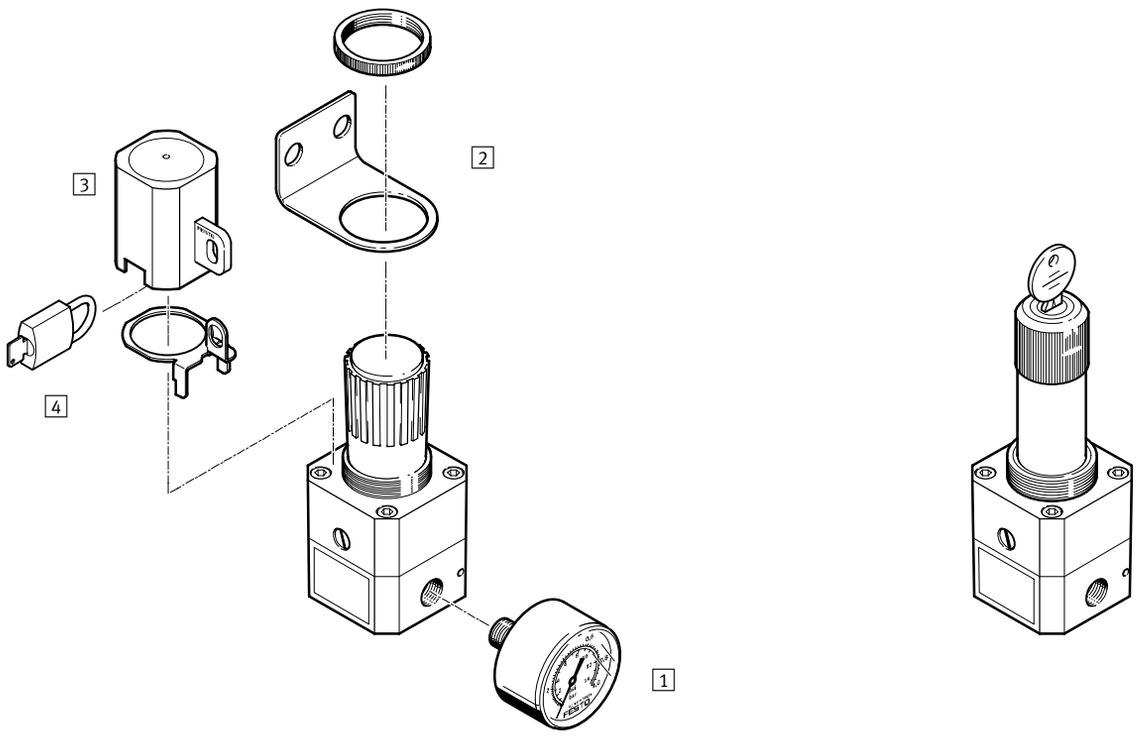

Mounting attachments and accessories	Brief description	➔ Page
1 Pressure gauge MAP	The pressure gauges measure pressure in bar and the psi display range	3 / 4.8-9
2 Mounting bracket HR-¼-P	For wall mounting	3 / 4.2-5
3 Regulator lock with lock plate LRVS-LRP-¼	Prevents unintentional, and in conjunction with an LRVS padlock, unauthorised adjustment of the rotary knob	3 / 4.2-5
4 Padlock LRVS-D	Accessory for LRVS	3 / 4.2-5

Type codes

LRP – ¼ – 0.7

Service function	
LRP	Precision pressure regulator
LRPS	Precision pressure regulator, lockable

Pneumatic connection	
¼	Thread G¼

Pressure regulation range	
0.7	0.05 ... 0.7 bar
2.5	0.05 ... 2.5 bar
4	0.05 ... 4 bar
10	0.1 ... 10 bar

Precision pressure regulators LRP/LRPS

Technical data

Function

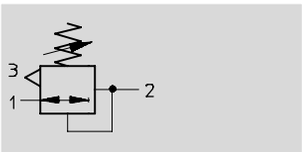

Flow rate
800 … 2 300 l/min

Temperature range
–10 … +60 °C

Input pressure
1 … 12 bar

The precision pressure regulator controls operating pressure (secondary side) with a diaphragm pilot control, which acts upon the main seat and thus achieves improved regulating characteristics.

- Precision pressure adjustment possible both in static and dynamic applications
- Pressure hysteresis of < 0.02 bar for flow rate characteristic curve
- Good response characteristics during rapid modification of input pressure and flow rate
- Input pressure fluctuations are almost entirely compensated

General technical data					
Type LRP/LRPS-¼-…		0,7	2,5	4	10
Pneumatic connection		G¼			
Operating medium		Compressed air, filtered, unlubricated, grade of filtration ≤ 40 µm			
Design		Pilot-actuated precision diaphragm regulating valve			
Type of mounting		Via accessories			
		Panel mounting			
		In-line installation			
Mounting position		Any			
Max. hysteresis	[mbar]	20			
Input pressure 1	[bar]	1 … 12			
Pressure regulation range	[bar]	0.05 … 0.7	0.05 … 2.5	0.05 … 4	0.1 … 10
Pressure indication		G⅛ prepared			

Standard nominal flow rate[1] qnN [l/min]					
Type LRP/LRPS-¼-…		0,7	2,5	4	10
Standard nominal flow rate	[l/min]	800	1 800	2 000	2 300

1) measured at p1 = 12 bar, Δp2 = 100 mbar

Ambient conditions		
Ambient temperature	[°C]	–10 … +60
Temperature of medium	[°C]	–10 … +60

Precision pressure regulators LRP/LRPS

Technical data

Weights [g]		
Type	LRP	LRPS
Precision pressure regulator	380	470

Materials

Sectional view

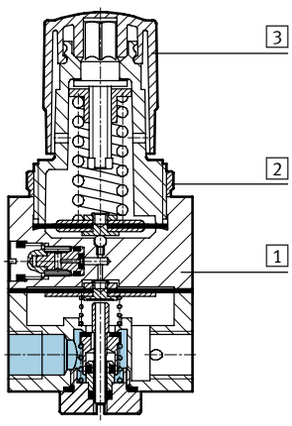

Precision pressure regulator		LRP	LRPS
1	Housing	Aluminium	
2	Knurled nut	Polycarbonate/polyamide	
3	Rotary knob	Polyacetate	Aluminium
–	Seals	Nitrile rubber	

Standard flow rate qn as a function of the output pressure p2

LRP/LRPS-¼ -0.7

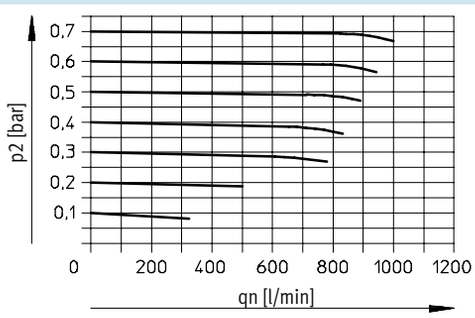

LRP/LRPS-¼ -2.5

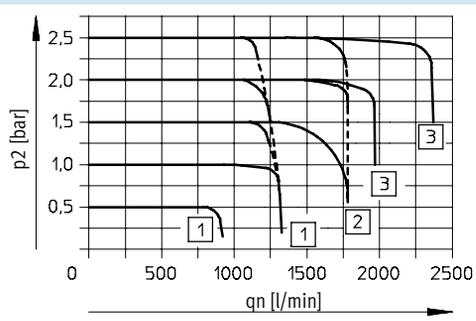

LRP/LRPS-¼ -4

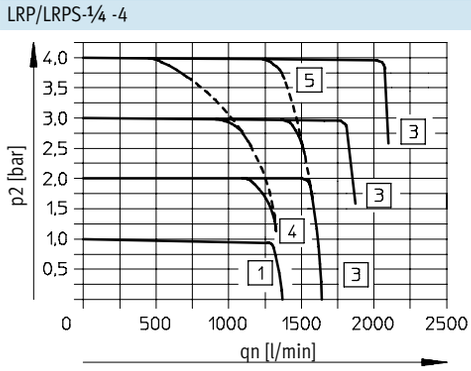

LRP/LRPS-¼ -10

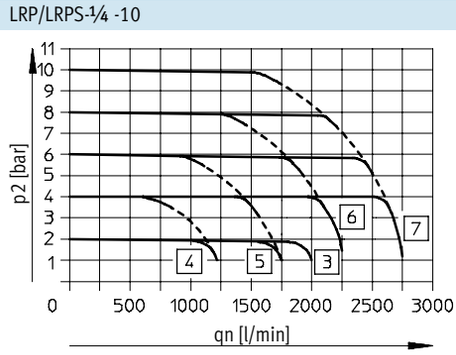

1 Input pressure p1 = 5 ... 12 bar
2 Input pressure p1 = 7 ... 12 bar
3 Input pressure p1 = 10 ... 12 bar
4 Input pressure p1 = 5 bar
5 Input pressure p1 = 7 bar
6 Input pressure p1 = 10 bar
7 Input pressure p1 = 12 bar

FESTO

Internal air consumption qn as a function of supply pressure p1

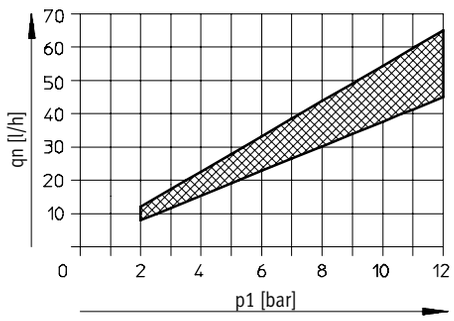

Standard flow rate qn as a function of output excess pressure p2

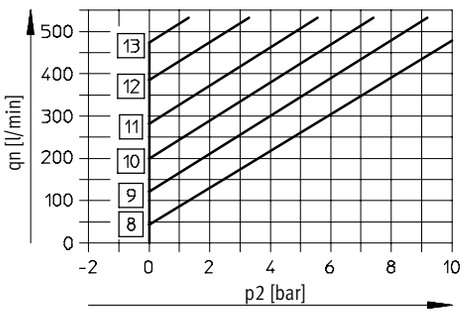

8 Output excess pressure p2 = 0.7 bar
9 Output excess pressure p2 = 2 bar
10 Output excess pressure p2 = 4 bar

11 Output excess pressure p2 = 6 bar
12 Output excess pressure p2 = 8 bar
13 Output excess pressure p2 = 10 bar

Primary pressure p1 = 10 bar

Output pressure p2 as a function of input pressure p1

Primary pressure dependence qn = 35 l/min

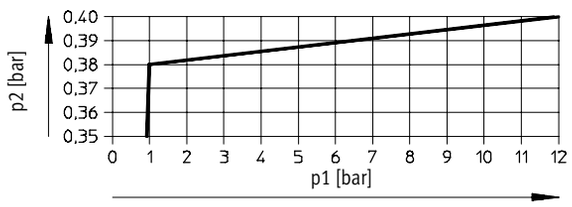

Primary pressure dependence qn = 220 l/min

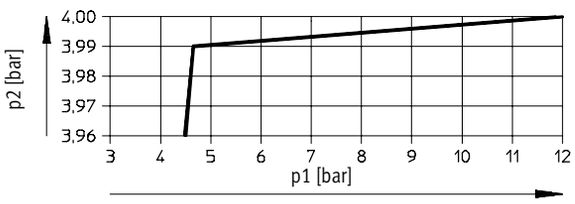

Primary pressure dependence qn = 55 l/min

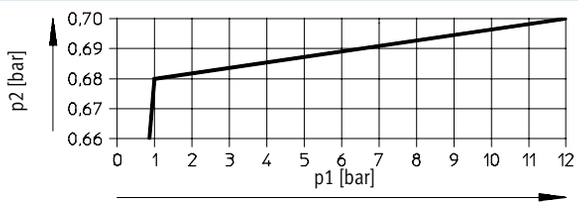

Primary pressure dependence qn = 340 l/min

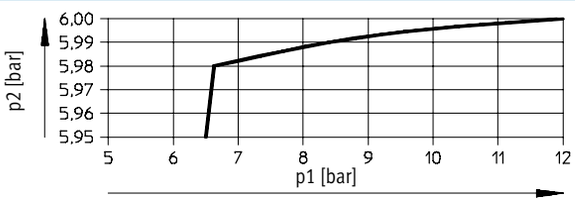

Primary pressure dependence qn = 120 l/min

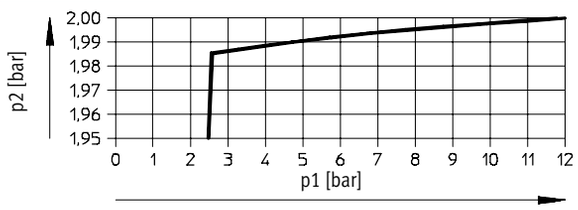

Primary pressure dependence qn = 420 l/min

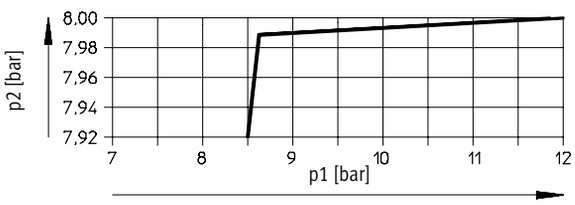

Precision pressure regulators LRP/LRPS

Technical data

FESTO

Dimensions Download CAD data ➔ **www.festo.com/en/engineering**

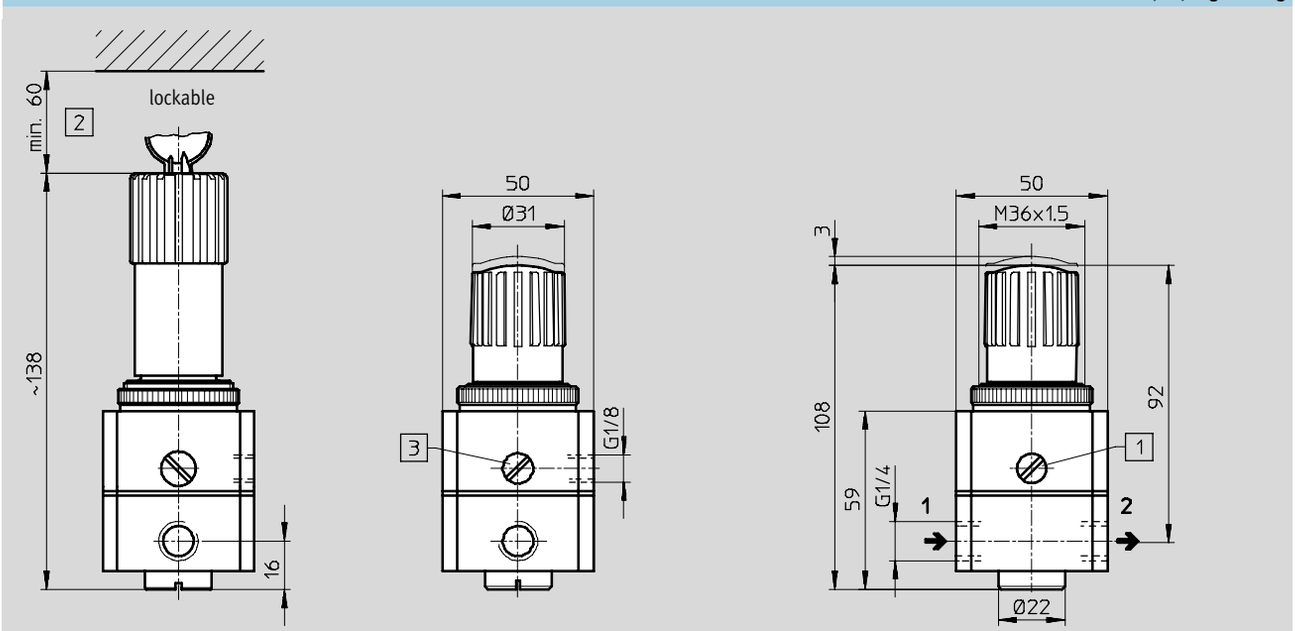

1 Pressure gauge connection 2 Installation dimensions 3 Filter throttle ➔ Flow direction

Ordering data				
Pressure regulation range [bar]	Precision pressure regulator LRP		Precision pressure regulator, lockable LRPS	
	Part No.	Type	Part No.	Type
0.05 ... 0.7	**159 500**	**LRP-¼-0,7**	**194 690**	**LRPS-¼-0,7**
0.05 ... 2.5	**162 834**	**LRP-¼-2,5**	**194 691**	**LRPS-¼-2,5**
0.05 ... 4	**159 501**	**LRP-¼-4**	**194 692**	**LRPS-¼-4**
0.1 ... 10	**159 502**	**LRP-¼-10**	**194 693**	**LRPS-¼-10**

Core Range

19.Mounting bracket HR
for wall mounting

Material:
Galvanised steel

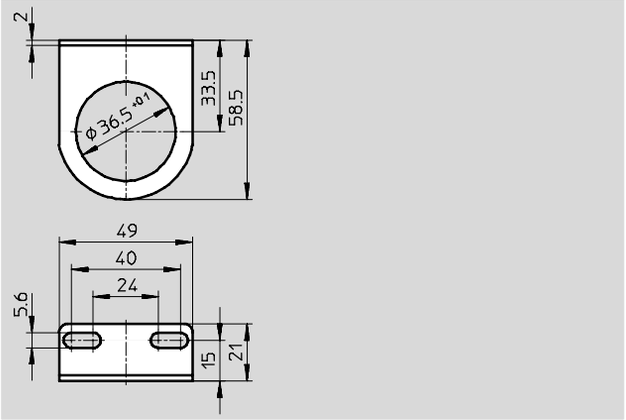

Ordering data		
	Part No.	Type
Mounting bracket	**159 503**	**HR-¼-P**

20.Regulator lock LRVS-LRP

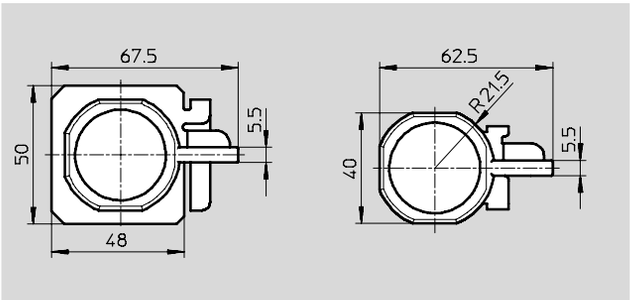

Ordering data				
	Connection	Weight [g]	Part No.	Type
Regulator lock	G¼	36	**193 785**	**LRVS-LRP-¼**

21.Padlock LRVS-D

Material:
Housing: Brass

Ordering data			
	Weight [g]	Part No.	Type
Padlock	120	**193 786**	**LRVS-D**

Core Range

Fine and micro filters, LFMB-H/LFMA-H, H series

Peripherals overview and type codes

FESTO

Peripherals overview

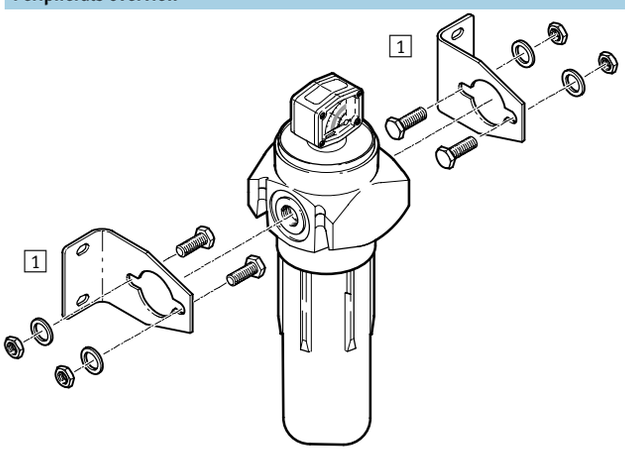

Mounting attachments and accessories	Brief description	➔ Page
1 Mounting bracket (2 pcs.) LFMM	The fine and micro filters are mounted on the wall using mounting brackets LFMM	3 / 4.3-9

Type codes

LFMB – ½ – H – A

Service function	
LFMA	Micro filter
LFMB	Fine filter

Pneumatic connection	
½	Thread G½
¾	Thread G¾
1	Thread G1

Series	
H	Series

Condensate drain	
A	Fully automatic

Fine and micro filters, LFMB-H/LFMA-H, H series

Technical data

FESTO

Function

Flow rate
1,100 ... 5,200 l/min

Temperature range
–10 ... +60 °C

Input pressure
0 ... 16 bar

Various industries require fine or micro-filtered air: chemicals, pharmaceuticals, process technology, food industry, etc. Festo fine and micro filters clean compressed air almost completely of any remaining minute water and oil droplets, together with any dirt particles.

- Robust die-cast design
- Very high flow rates
- All filter units with automatic condensate drain and differential pressure gauge for displaying filter pollution
- Fine and micro-filters fulfil stringent air quality requirements in accordance with ISO 8573-1
- Easy replacement of filter components
- Resistant to mineral and synthetic lubricants

Fine filter function

Compressed air flows through a filter cartridge made of borosilicate fibre-glass, from the inside to the outside. As the compressed air flows through the fibre tissues, large particles are prevented from passing the filtration bed by simple inertia, or are collected by collision with the fibres.

Separation of fine and very fine oil vapour particles and solid impurities down to 0.01 micron results from an extremely fine filter tissue. The smallest particles collect on the fibres where they form larger droplets (coalescing effect), which run off due to gravity.

The flow rate recommended for each filter must be observed in order to prevent the oil-water emulsion which has accumulated in the foam jacket from being drawn in by the compressed air. Compressed air should be pre-filtered to 5 µm where fine filters and micro-filters are used.

General technical data							
Type		Micro filters LFMA			Fine filters LFMB		
Pneumatic connection		G½	G¾	G1	G½	G¾	G1
Design		Fibre filter					
Type of mounting		In-line installation					
		Via accessories					
Mounting position		Vertical ±5°					
Operating medium		Compressed air, filtered, grade of filtration 1 µm			Compressed air, filtered, grade of filtration 5 µm		
Grade of filtration	[µm]	0.01			1		
Residual oil content	[mg/m³]	≤0.01			≤0.5		
Filter efficiency	[%]	99.9999					
Input pressure	[bar]	0 ... 16					
Air purity classes per ISO 8573-1							
Particulate		1			2		
Atomised oil		2			3		

Note: This product conforms with the ISO 1179-1 standard and the ISO 228-1 standard.

Fine and micro filters, LFMB-H/LFMA-H, H series

Technical data

Standard nominal flow rate[1] qnN [l/min]			
Connection	G½	G¾	G1
Micro filters LFMA	1,100	2,000	3,400
Fine filters LFMB	1,600	3,300	5,200

1) With 6 bar input pressure and Δp = 0.07 bar.

Ambient conditions		
Ambient temperature	[°C]	−10 ... +60
Corrosion resistance	CRC[1]	2

1) Corrosion resistance class 2 according to Festo standard 940 070
Components requiring moderate corrosion resistance. Externally visible parts with primarily decorative surface requirements which are in direct contact with a surrounding industrial atmosphere or media such as cooling or lubricating agents.

Weights [g]			
	G½	G¾	G1
Micro filters LFMA	1,100	2,800	3,200
Fine filters LFMB	1,100	2,800	3,200

Materials

Sectional view

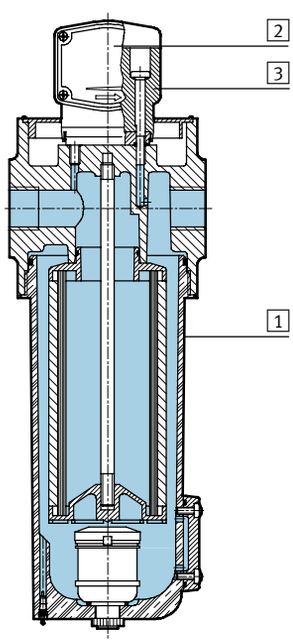

Fine and micro filters		
1	Housing/bowl	Die-cast zinc
2	Pressure gauge sight glass	Polymethylmethacrylate
3	Pressure gauge housing	Polyamide
–	Seals	Nitrile rubber

FESTO

Standard flow rate qn as a function of the output pressure Δp1-2

LFMA-½-H-A

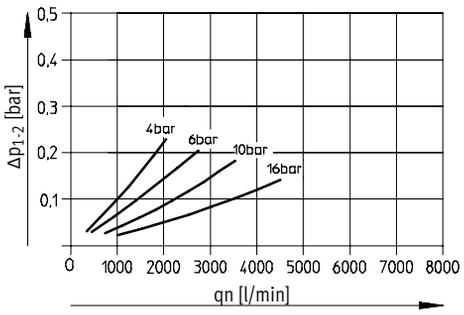

LFMB-½-H-A

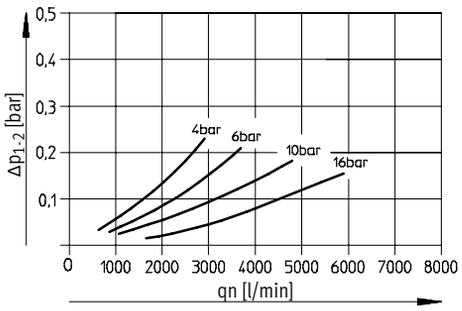

LFMA-¾-H-A

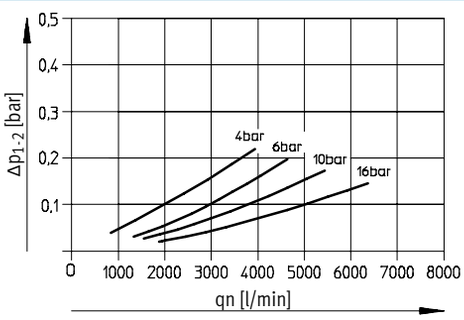

LFMB-¾-H-A

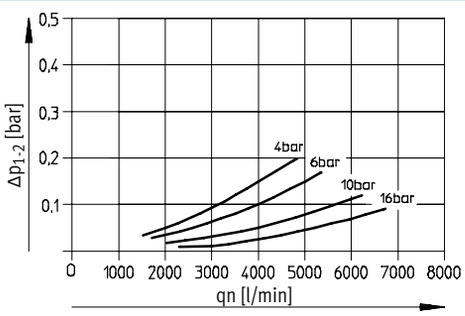

LFMA-1-H-A

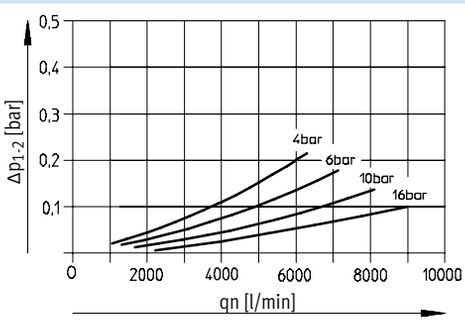

LFMB-1-H-A

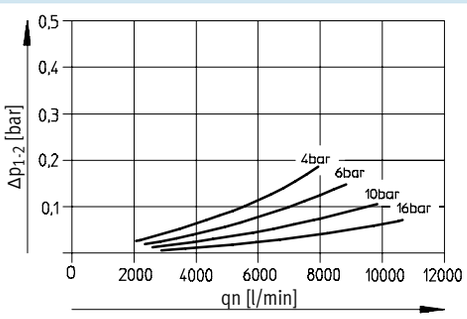

Fine and micro filters, LFMB-H/LFMA-H, H series

Technical data

FESTO

Dimensions Download CAD data ➔ **www.festo.com/en/engineering**

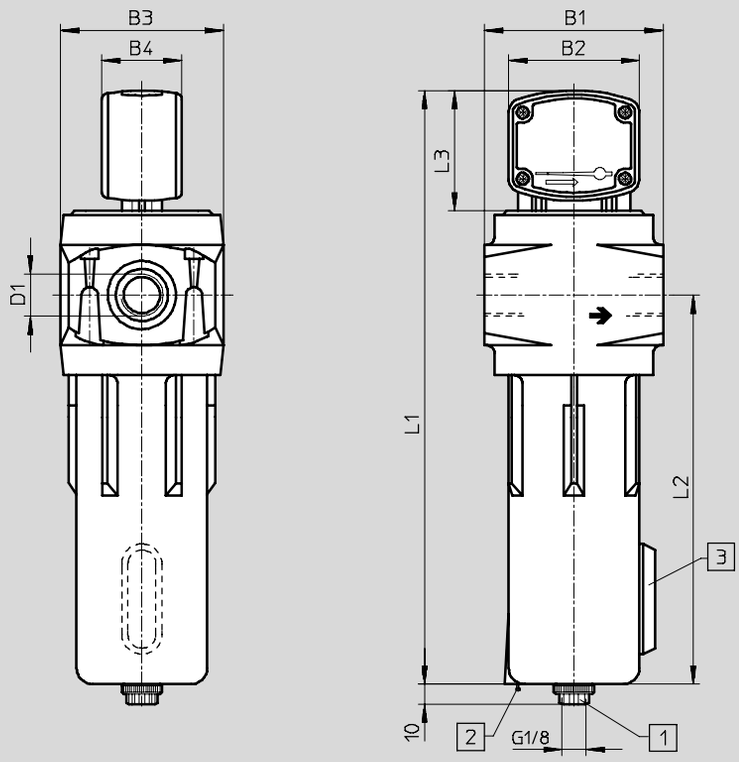

1 Fully automatic condensate drain (tightening torque 1 Nm)
2 Pressure relief valve
3 Sight glass for condensate level
➔ Flow direction

Type	B1	B2	B3	B4	D1	L1	L2	L3
LFMA-½-H-A	89	65	81	39	G½	294	194	60
LFMB-½-H-A								
LFMA-¾-H-A	120		112		G¾	366	251	
LFMB-¾-H-A								
LFMA-1-H-A	120		112		G1	466	351	
LFMB-1-H-A								

Ordering data

Connection	Grade of filtration 1 µm		Grade of filtration 0.01 µm	
	Part No.	Type	Part No.	Type
G½	**162 818**	**LFMB-½-H-A**	**162 815**	**LFMA-½-H-A**
G¾	**162 819**	**LFMB-¾-H-A**	**162 816**	**LFMA-¾-H-A**
G1	**162 820**	**LFMB-1-H-A**	**162 817**	**LFMA-1-H-A**

Filter combinations LFMBA-H, H series

Peripherals overview

FESTO

Peripherals overview

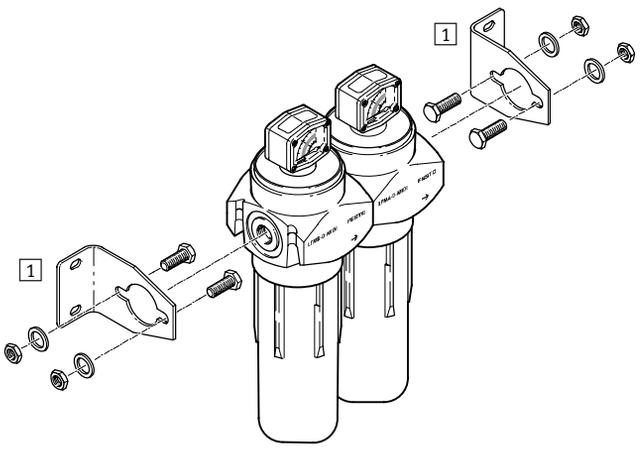

Mounting attachments and accessories	Brief description	➔ Page
1 Mounting bracket (2 pcs.) LFMM	The filter combination is attached to the wall by means of the mounting brackets LFMM	3 / 4.3-9

Type codes

LFMBA – ½ – H – A

Service function	
LFMBA	Filter combination

Pneumatic connection	
½	Thread G½
¾	Thread G¾
1	Thread G1

Series	
H	Series

Condensate drain	
A	Fully automatic

Filter combinations LFMBA-H, H series

Technical data

Function

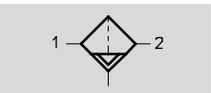

Flow rate
800 … 2,600 l/min

Temperature range
–10 … +60 °C

Input pressure
0 … 16 bar

Various industries require fine or micro-filtered air: chemicals, pharmaceuticals, process technology, food industry, etc. Festo fine and micro filters clean compressed air almost completely of any remaining minute water and oil droplets, together with any dirt particles.

- Available as pre-assembled filter combination
- Very high flow rates
- All filter units with automatic condensate drain and differential pressure gauge for displaying filter pollution
- Fine and micro-filters fulfil stringent air quality requirements in accordance with ISO 8573-1
- Easy to replace filter components
- Resistant to mineral and synthetic lubricants

General technical data				
Type		Filter combination LFMBA		
Pneumatic connection		G½	G¾	G1
Design		Fibre filter		
Type of mounting		In-line installation		
		Via accessories		
Mounting position		Vertical ±5°		
Grade of filtration	[µm]	0.01		
Residual oil content	[mg/m³]	≤0.01		
Filter efficiency	[%]	99.9999		
Input pressure	[bar]	0 … 16		
Air purity classes per ISO 8573-1				
Particulate		1		
Atomised oil		2		

Standard nominal flow rate[1] qnN [l/min]			
Connection	G½	G¾	G1
LFMBA-…-H-A	800	1,400	2,600

1) With 6 bar input pressure and Δp = 0.07 bar.

Ambient conditions				
Variant		G½	G¾	G1
Ambient temperature	[°C]	–10 … +60		
Corrosion resistance	CRC[1]	2		

1) Corrosion resistance class 2 according to Festo standard 940 070
Components requiring moderate corrosion resistance. Externally visible parts with primarily decorative surface requirements which are in direct contact with a surrounding industrial atmosphere or media such as cooling or lubricating agents.

Note: This product conforms with the ISO 1179-1 standard and the ISO 228-1 standard.

Filter combinations LFMBA-H, H series

Technical data

Weights [g]			
	G½	G¾	G1
LFMBA-...	2,300	5,700	6,500

Materials

Sectional view

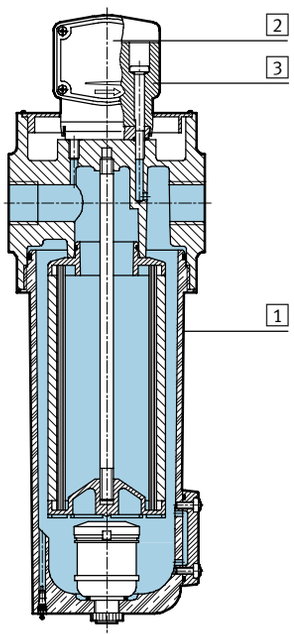

Fine and micro filters		
1	Housing/bowl	Die-cast zinc
2	Pressure gauge sight glass	Polymethylmethacrylate
3	Pressure gauge housing	Polyamide
–	Seals	Nitrile rubber

Standard flow rate qn as a function of the output pressure Δp1-2

LFMBA-½-H-A

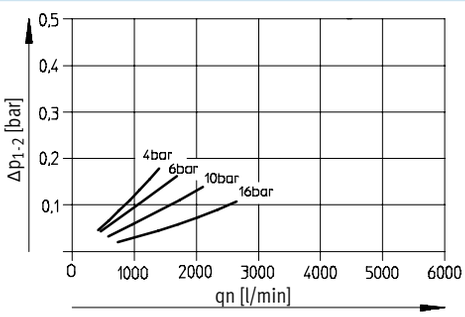

LFMBA-¾-H-A

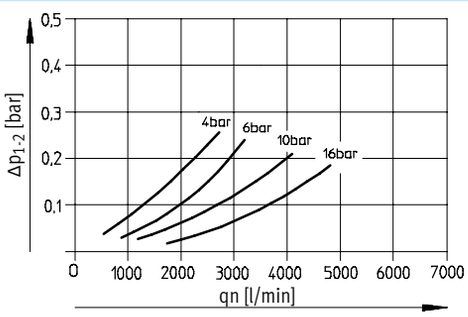

LFMBA-1-H-A

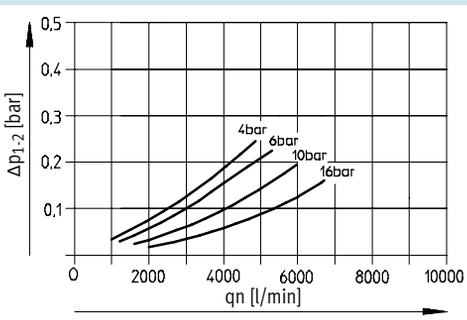

Filter combinations LFMBA-H, H series

Technical data

FESTO

Dimensions Download CAD data ➔ **www.festo.com/en/engineering**

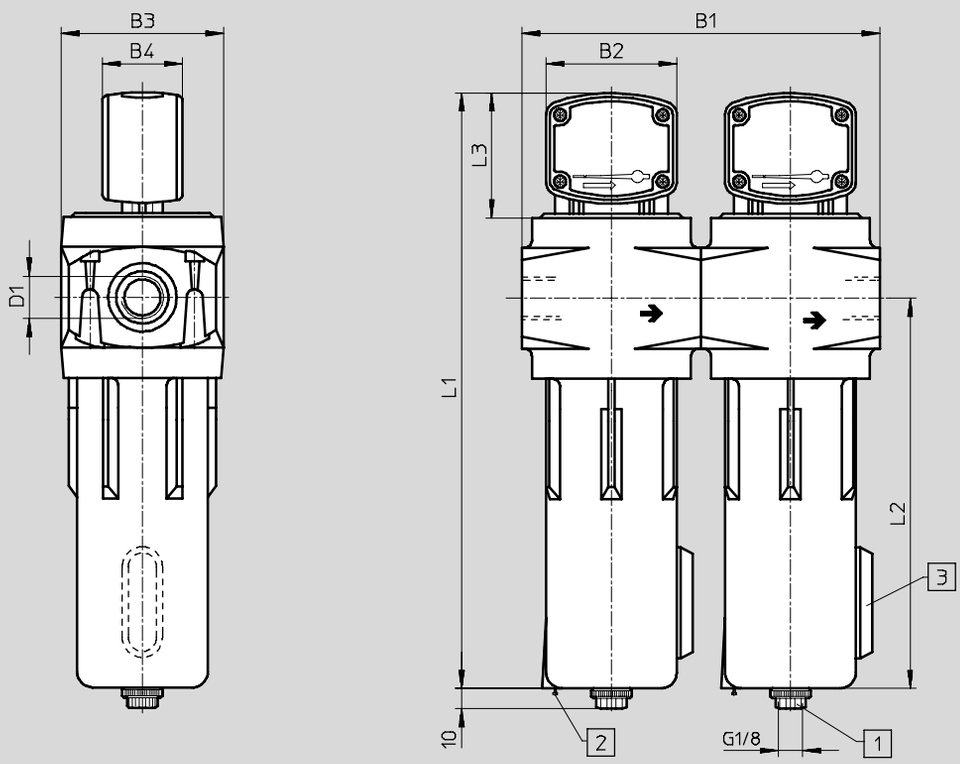

1 Fully automatic condensate drain (tightening torque 1 Nm)
2 Pressure relief valve
3 Sight glass for condensate level
➔ Flow direction

Type	B1	B2	B3	B4	D1	L1	L2	L3
LFMBA-½-H-A	178	65	81	39	G½	294	194	60
LFMBA-¾-H-A	240		112		G¾	366	251	
LFMBA-1-H-A	240		112		G1	466	351	

Note: This product conforms with the ISO 1179-1 standard and the ISO 228-1 standard.

Ordering data

Connection	Part No.	Type
G½	**162 821**	**LFMBA-½-H-A**
G¾	**162 822**	**LFMBA-¾-H-A**
G1	**162 823**	**LFMBA-1-H-A**

32.Mounting bracket LFMM

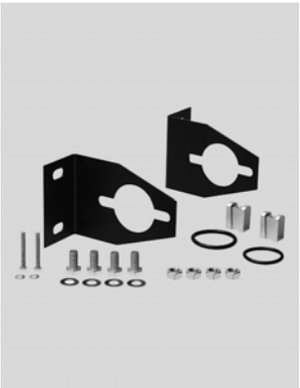

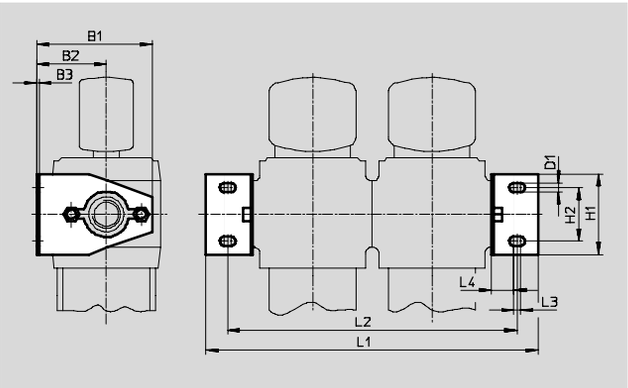

Ordering data														
Connection							LFMB/A		LFMBA				Part No.	Type
	B1	B2	B3	D1	H1	H2	L1	L2	L1	L2	L3	L4		
G½	86	52	1.6	7	60	40	159	127	248	216	5	16.5	**162 830**	**LFMM-½-H**
G¾, G1	116	68	2	9	80	60	200	157	320	277	5	16	**162 831**	**LFMM-¾-1-H**

33.Connection piece LFMV
for connecting two filters

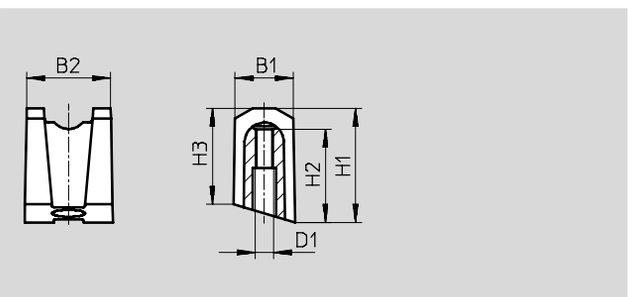

Ordering data								
Connection	B1	B2	D1	H1	H2	H3	Part No.	Type
G½	9.75	14	M3x0.5	19	15.5	16	**162 832**	**LFMV-½-H**
G¾, G1	12.5	20	M4	29	26	25.5	**162 833**	**LFMV-¾-1-H**

FESTO

35.Filter cartridge LFMBP/LFMAP

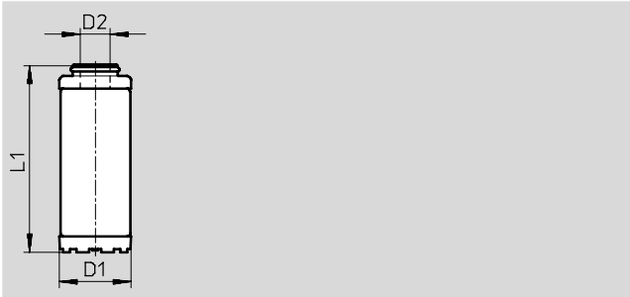

Ordering data					
Connection	D1 ∅	D2 ∅	L1	Part No.	Type
For fine filter					
G¼	35	6.75	74	**185 689**	**LFMBP-¼-H**
G½	48	21.7	126	**162 827**	**LFMBP-½-H**
G¾	72	33	168.8	**162 828**	**LFMBP-¾-H**
G1	72	33	268.8	**162 829**	**LFMBP-1-H**
For micro filter					
G¼	35	6.75	74	**185 688**	**LFMAP-¼-H**
G½	48	21.7	126	**162 824**	**LFMAP-½-H**
G¾	72	33	168.8	**162 825**	**LFMAP-¾-H**
G1	72	33	268.8	**162 826**	**LFMAP-1-H**

Filter silencers LFU

Technical data

FESTO

Function

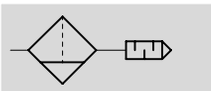

Flow rate
4,000 … 12,500 l/min

Temperature range
–10 … +100 °C

Input pressure
0 … 16 bar

All exhaust air from pneumatic control systems is cleaned by the filter silencer.
Exhaust air is discharged into the atmosphere via a fine filter cartridge (degree of filtration: >99.99%).
At the same time, exhaust noise is greatly reduced. Condensate is collected in the lower plastic bowl and can be discharged via the condensate drain.

- Exhaust air is up to 99.99% free of oil and other contaminants.
- Condensate drain, manual rotary.
- The silencer reduces exhaust noise regardless of frequency.

General technical data					
Size		G¼	G⅜	G½	G1
Pneumatic connection		G¼	G⅜	G½	G1
Mounting position		Vertical ±5°			
Flow rate[1)]	[l/min]	≥4,000	≥4,700	≤6,000	≤12,500
Input pressure	[bar]	0 … 16			
Noise reduction[1)]		Reduction of 40 db(A)		>40 db(A)	

1) At 6 bar with respect to atmosphere.
Note: This product conforms with the ISO 1179-1 standard and the ISO 228-1 standard.

Ambient conditions			
Ambient temperature	[°C]	–10 … +60	0 … +100
Corrosion resistance	CRC[1)]	2	

1) Corrosion resistance class 2 according to Festo standard 940 070
Components requiring moderate corrosion resistance. Externally visible parts with primarily decorative surface requirements which are in direct contact with a surrounding industrial atmosphere or media such as cooling or lubricating agents.

Weights [g]				
Size	G¼	G⅜	G½	G1
Filter silencer	190	190	570	1,010

Filter silencers LFU

Technical data

FESTO

Materials

Sectional view

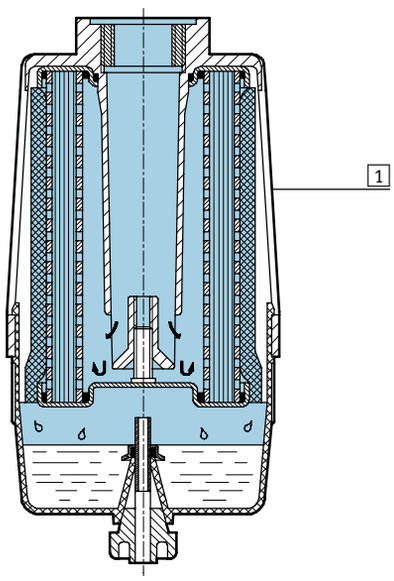

Filter silencer	
1 Housing	Polypropylen
Note on material	Free of copper and PTFE

Dimensions and ordering data

Download CAD data ➔ **www.festo.com/en/engineering**

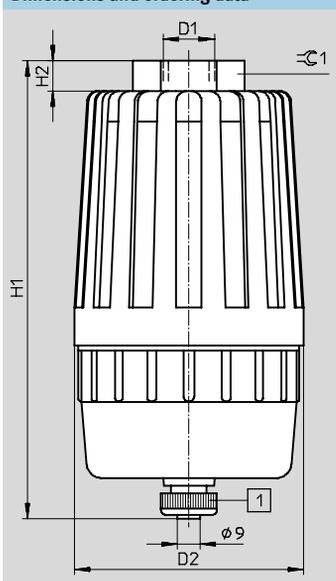

1 Condensate drain, manual rotary

Connection	D1	D2	H1	H2	1	Part No.	Type	
G¼	G¼	77	131	7	26	**539 132**	**LFU-¼**	New
G⅜	G⅜	77	131	7	26	**539 133**	**LFU-⅜**	New
G½	G½	90	180	12	41	**10 494**	**LFU-½**	
G1	G1	100	252	15	50	**10 495**	**LFU-1**	

Note: This product conforms with the ISO 1179-1 standard and the ISO 228-1 standard.

Filter silencers LFU

Accessories

FESTO

Filter cartridge LFPU

Note on material:
Free of copper and PTFE

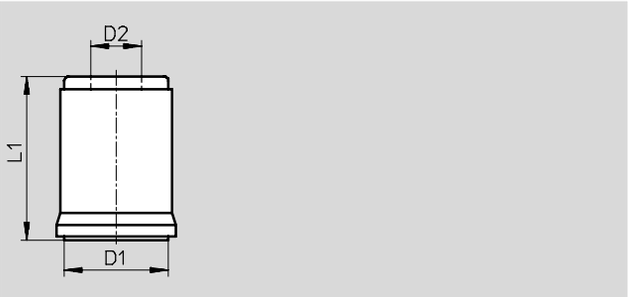

Dimensions and ordering data					
For connection	D1 ∅	D2 ∅	L1	Part No.	Type
G¼,⅜	60	28	69	**539134**	**LFPU-¼-⅜** New
G½	70	34.8	110	**10 496**	**LFPU-½**
G1	82	42.8	180	**10 497**	**LFPU-1**

Shut-off valve HE-LO, to safety standard

Technical data

FESTO

Function

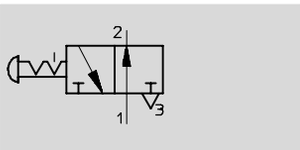

Flow rate
5,200 ... 12,000 l/min

Temperature range
–10 ... +60 °C

Operating pressure
1 ... 10 bar

Note
The shut-off valve may not be used as an emergency stop valve.

For units that require a pneumatic shut-off in order to carry out maintenance or repair work, for example.

The valve is installed into the air supply line and fulfils requirements set forth by OSHA 29 CFR 147, “Controlling Dangerous Energy Sources”, issued by the United States Department of Labor.

Function:
The valve is used for shutting off the compressed air supply, while simultaneously exhausting systems which are powered using compressed air.
Flow from port 1 to port 2 is blocked when the actuator knob is pressed, and flow from port 2 to port 3 is opened.

The largest exhaust flow rate is achieved by keeping the actuating knob in the actuated position until the connected system is completely exhausted.
The valve can be locked in the closed position using a padlock.
This ensures that a decommissioned system (e.g. during maintenance work) cannot be pressurised without authorisation.

General technical data					
Type		HE-G3/8-LO	HE-G1/2-LO	HE-G3/4-LO	HE-G1-LO
Design		Manually actuated 3/2-way valve with piston slide			
Type of mounting		Screwed into piping 2 through holes in housing with ∅ 8 mm for wall mounting			
Mounting position		Any, but make sure there is easy access to the actuating knob			
Connection	1, 2	G3/8	G1/2	G3/4	G1
(Female thread)	3	G1			
Operating pressure	[bar]	1 ... 10			

Standard nominal flow rate[1] qnN [l/min]				
Connection	G3/8	G1/2	G3/4	G1
1 → 2	5,200	6,200	8,000	10,000
2 → 3	12,000			

1) Measured at primary pressure pl = 6 bar and Δp = 1 bar.

Ambient conditions		
Ambient temperature	[°C]	–10 ... +60
Corrosion resistance	CRC[1]	3

1) Corrosion resistance class 3 according to Festo standard 940 070
Components requiring higher corrosion resistance. External visible parts in direct contact with industrial atmospheres or media such as solvents and cleaning agents, with a predominantly functional requirement for the surface.

Weights [g]				
	G3/8	G1/2	G3/4	G1
HE-...-LO	1,100		1,000	

Note: This product conforms with the ISO 1179-1 standard and the ISO 228-1 standard.

Shut-off valve HE-LO, to safety standard

Technical data

FESTO

Materials

Sectional view

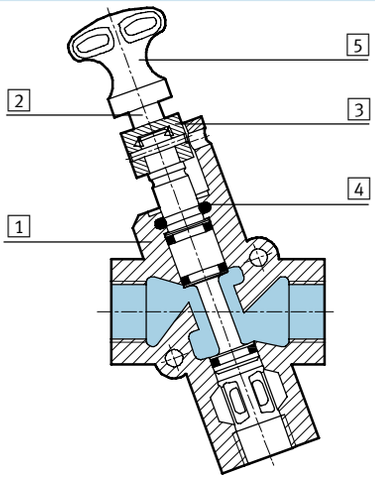

Shut-off valve		
1	Housing	Die-cast aluminium
2	Piston spool	Aluminium
3	Guide	Polyetrafluorethylene
4	O-ring	Polyurethane
5	Actuating knob	Die-cast aluminium
–	Seals	Nitrile rubber

Dimensions

Download CAD data ➔ **www.festo.com/en/engineering**

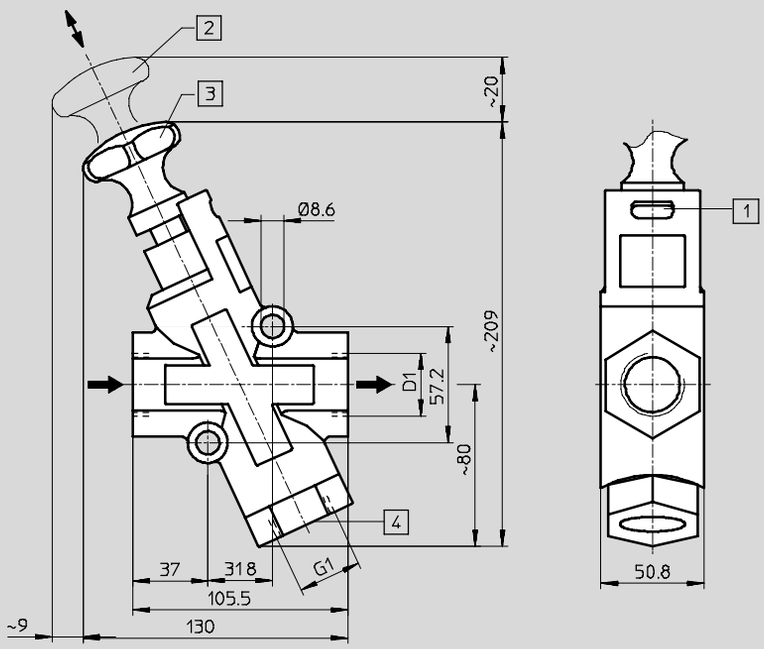

1 Slot for padlock
2 Actuating knob open
3 Actuating knob locked
4 Threaded connection, e.g. for silencer

➔ Flow direction

Type	D1
HE-G3/8-LO	G3/8
HE-G1/2-LO	G1/2
HE-G3/4-LO	G3/4
HE-G1-LO	G1

Note: This product conforms with the ISO 1179-1 standard and the ISO 228-1 standard.

Ordering data

Connection	Part No.	Type
G3/8	**197 133**	**HE-G3/8-LO**
G1/2	**197 134**	**HE-G1/2-LO**
G3/4	**197 135**	**HE-G3/4-LO**
G1	**197 136**	**HE-G1-LO**

43.Padlock LRVS-D
for shut-off valve

Material:
Housing: Brass

Ordering data			
	Weight [g]	Part No.	Type
Padlock	120	**193 786**	**LRVS-D**

Adsorption dryer LDF

Features

Small unit – big effect

Cold-regenerating adsorption dryer with defined pressure dew point and high flow rate for decentralised compressed air drying.
The LDF adsorption dryer effectively prevents corrosion, wear, excessive product wastage, frequent maintenance and damage to sensitive machinery.

- The solution for dry and clean compressed air
- Greater service life of pneumatic components
- Pressure dew point –40 °C, (–70 °C on request)
- Additional filtering of oil and particulate
- Produced for decentralised compressed air drying
- High flow rate performance up to 1,600 l/min
- Low energy consumption and noise levels
- In combination with a prefilter and secondary filter, this achieves air purity class 2.2.1 or 2.1.1 to DIN ISO 8573-1 at the outlet.
- Of particular interest for printed circuit production, optical industries, foil production, dental technology, drying and transportation of powder materials, paint systems, drying and cleaning precision parts, food industry and pharmaceuticals.

Decentralised drying

Partial drying is already started in the after-cooler. Actual drying can be centralised in the compressor room or decentralised as required with the consuming devices using compact Festo LDF-H-... adsorption dryers. Decentralised drying is advantageous because only the actually required amount of dry air is prepared. Pressure dew points of less than 0 °C always require the utilisation of adsorption dryers.

Constant air quality

The drying granulate is introduced into the dryer in such a way as to ensure even and compact filling.

Adsorption dryer LDF

Key features and type code

FESTO

Reduces energy costs	Reduced service costs		Complete drying package
The dryers have a low differential pressure.	The dryer granulate has a long service life (approx. 15,000 operating hours). When refilling the dryer, the Festo	filling funnel must be used to ensure that the filling density in the chambers is optimal.	These dryers are fitted as standard with coalescing filters.

Function

The airflow is filtered in the inlet filter (oil would considerably reduce the granulate service life). The adsorption dryer consists of two chambers filled with drying agent. Moist compressed air flows through the two chambers alternately, and the water from the air accumulates on the surface of the drying agent. After a predetermined period of time, the flow of air is switched to the other chamber and a portion of the dried air is used to regenerate the drying agent in the first chamber. The drying agent has a service life of several years. The standard LDF dryers achieve a pressure dew point of –40 °C (air purity class 2.2.1 to DIN ISO 8573-1 at the outlet).

An appropriate drying agent is used with dryers which have a pressure dew point of up to –70 °C (air purity class 2.1.1 to DIN ISO 8573-1 at the outlet) (upon request). The pressure dew point should be about 10 °C less than the anticipated ambient temperature. The application area for the adsorption dryer is decentralised compressed air preparation. The purge air requirement at the optimal operating point (6 bar/35 °C) is approx. 22%. If the dryer is used under different operating conditions, the input air/purge air ratio may change as the purge air consumption is only dependent on the input air and not on the used output flow rate.

Important

The supplied inlet filter, a 0.01 µm micro filter, provides clean operating air. It protects the drying agents from contaminating dirt and oil particles.

The outlet filter, a 1 µm fine filter, removes any drying agent particles. The inlet filter cannot remove gaseous components, such as water and oil vapour, from the air. However, this is achieved by the highly porous drying granulate. It is for this reason that the LDF-H dryer achieves the highest air quality class for particles and oil.

Type codes

LDF	–	H1	–	¼	–	24

Basic function

LDF	Adsorption dryer

Differential pressure [mbar]

H1	50
H2	150
H3	500
H4	250
H5	350
H6	600
H7	900

Pneumatic connection

¼	Thread G¼
½	G½ thread

Voltage

24	24 V DC
110	110 V AC
230	230 V AC

Adsorption dryer LDF

Technical data

FESTO

Function

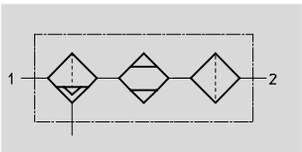

Flow rate
26 … 1,600 l/min

Temperature range
2 … 50 °C

Input pressure
4 … 10.5 bar

General technical data								
		H1	H2	H3	H4	H5	H6	H7
Pneumatic connection		G¼			G½			
Operating medium		Compressed air, filtered, unlubricated						
Design		Cold regenerating compressed air adsorption dryer						
Type of mounting		Through-hole						
Mounting position		Vertical ±5°						
Pressure dew point	[°C]	–40 (–70 on request)						
Differential pressure	[mbar]	50	150	500	250	350	600	900
Input pressure	[bar]	4 … 10.5						
Air purity class at the outlet		2.2.1 to DIN ISO 8573-1 (2.1.1 to DIN ISO 8573-1 upon request)						
Electrical data								
Electrical connection		With plug socket to DIN 43 650 type A (MSSD-C ➔ Volume 2)			With screw terminals			
Power consumption	DC	2.5 W			5 W			
	AC	50 Hz: 5 VA			110 V: 0.27 A			
		60 Hz: 3.7 VA			230 V: 0.12 A			
Protection against polarity reversal		At 24 V DC						
CE symbol		EU directive 89/336/EEC Electromagnetic compatibility (all types)						
		73/23/EEC Low voltage (all types except LDF-...-24)						
Protection class		IP65 to DIN 40 050						

Ambient conditions								
Variant		H1	H2	H3	H4	H5	H6	H7
Media temperature	[°C]	2 … 50						
Ambient temperature	[°C]	2 … 50						
Storage temperature	[°C]	–20 … +60						
Corrosion resistance	CRC[1)]	1						

1) Corrosion resistance class 1 according to Festo standard 940 070
Components requiring low corrosion resistance. Transport and storage protection. Parts that do not have primarily decorative surface requirements, e.g. in internal areas that are not visible or behind covers.

Weights [g]							
	H1	H2	H3	H4	H5	H6	H7
Adsorption dryer	5,400	6,500	9,200	24,700	30,200	35,700	41,200

Adsorption dryer LDF

Technical data

Note

Please do not use the average consumption values as your guide when setting up the dryer, instead use

a) the inlet pressure of the dryer
b) the peak value for the flow rate
c) the maximum permissible inlet temperature.

The adsorption dryers are designed for continuous operation. Pulsed or intermittent operation can lead to the premature aging of and/or damage to the drying agent and thus to the failure of the dryer.

If the adsorption dryer LDF is nonetheless to be used in pulsed or intermittent mode the use of buffer reservoirs, through which the compressed air flows, is recommended. Depending on the application these can be mounted before and/or after the dryer.

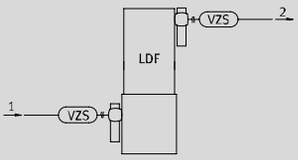

The pressure reservoirs may not be connected on one side only:

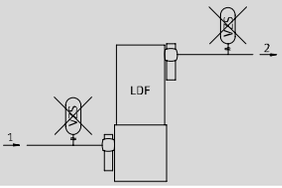

Standard nominal flow rate qnN [Nl/min] at pressure dew point –40 °C							
Type	Temperature of medium	Input pressure [bar]					
		4	5	6	7	8	10
LDF-H1	20 °C	25.9	40.1	57.4	65.6	73.8	90.1
	35 °C	25.2	39.1	57.8	66.1	74.3	90.8
LDF-H2	20 °C	51.7	80.2	114.8	131.2	147.6	180.3
	35 °C	50.4	78.2	115.7	132.1	148.6	181.6
LDF-H3	20 °C	111.9	173.6	248.8	284.3	319.8	390.7
	35 °C	109.1	169.3	250.6	286.4	322.1	393.6
LDF-H4	20 °C	207.8	322.3	461.5	527.2	593.0	724.6
	35 °C	202.7	314.4	464.8	531.1	597.4	729.9
LDF-H5	20 °C	273.8	424.8	607.7	694.3	781.0	954.2
	35 °C	267.1	414.3	612.1	699.4	786.7	961.2
LDF-H6	20 °C	359.7	558.0	799.2	913.1	1,027.1	1,255.0
	35 °C	350.9	544.3	805.0	919.8	1,034.6	1,264.1
LDF-H7	20 °C	456.1	707.5	1,013.0	1,157.4	1,301.9	1,590.7
	35 °C	444.9	690.1	1,020.4	1,165.9	1,311.3	1,602.3

Adsorption dryer LDF

Technical data

Dimensions Download CAD data ➔ **www.festo.com/en/engineering**

LDF-H1 ... H3 LDF-H4 ... H7

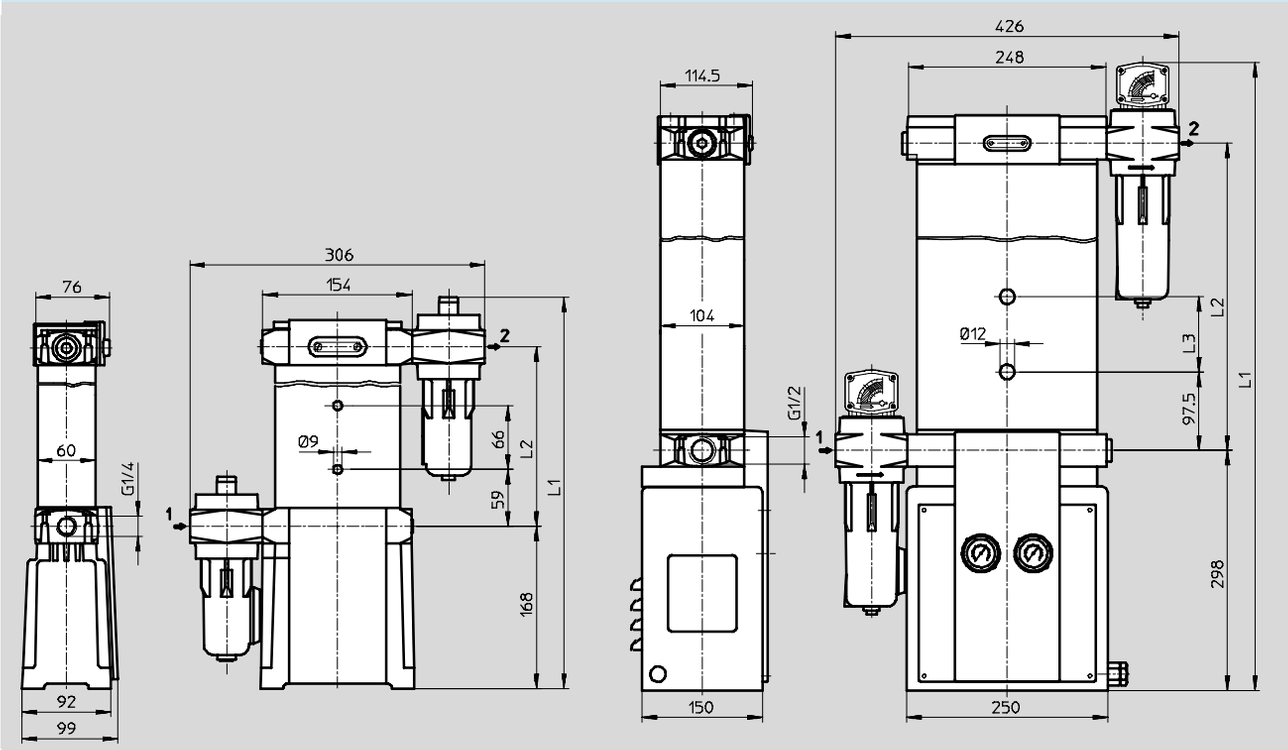

Type	L1	L2	L3
H1	403	186	–
H2	498	281	–
H3	738	521	–
H4	780	382	93.5
H5	946	548	176.5
H6	1,111	713	259
H7	1,176	778	341.5

Ordering data

Type	Connection	24 V DC		110 V AC		230 V AC	
		Part No.	Type	Part No.	Type	Part No.	Type
H1	G¼	**178 516**	**LDF-H1-G¼-24**[1)]	**178 517**	**LDF-H1-G¼-110**[1)]	**178 518**	**LDF-H1-G¼-230**[1)]
H2		**178 519**	**LDF-H2-G¼-24**[1)]	**178 520**	**LDF-H2-G¼-110**[1)]	**178 521**	**LDF-H2-G¼-230**[1)]
H3		**178 522**	**LDF-H3-G¼-24**[1)]	**178 523**	**LDF-H3-G¼-110**[1)]	**178 524**	**LDF-H3-G¼-230**[1)]
H4	G½	**178 525**	**LDF-H4-G½**	–		–	
H5		**178 528**	**LDF-H5-G½**	–		–	
H6		**178 531**	**LDF-H6-G½**	–		–	
H7		**178 534**	**LDF-H7-G½**	–		–	

1) Free of copper, PTFE and silicone

49.Adsorption dryer LDF

Accessories

50.Drying agent LDF-TM

Drying agent:
Aluminium oxide

Ordering data									
Weight	Dryer type (volume required)							Part No.	Type
[g]	H1	H2	H3	H4	H5	H6	H7		
1,000	1	1	2	–	2	–	2	**538 661**	**LDF-TM-H1-H7-1KG**
4,000	–	–	–	1	1	2	2	**538 662**	**LDF-TM-H1-H7-4KG**

51.Funnel LDF-FS

Ordering data		
Type	Part No.	Type
H1 ... H3	**538 668**	**LDF-FS-H1-H3**
H4 ... H7	**538 669**	**LDF-FS-H4-H7**

52.Seal range LDF-DS

Ordering data		
Type	Part No.	Type
H1 ... H3	**538 670**	**LDF-DS-H1-H3**
H4 ... H7	**538 671**	**LDF-DS-H4-H7**

53.Filter cartridge LFMBP/LFMAP

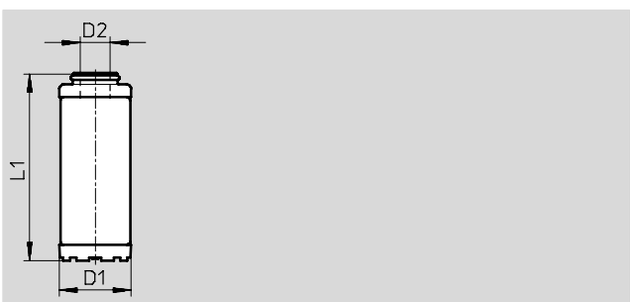

Ordering data							
Dryer type	Connection	Grade of filtration [µm]	D1 ∅	D2 ∅	L1	Part No.	Type
For inlet filter							
H1 ... H3	G¼	0.01	35	6.75	74	**185 688**	**LFMAP-¼-H**
H4 ... H7	G½	0.01	48	21.7	126	**162 824**	**LFMAP-½-H**
For outlet filter							
H1 ... H3	G¼	1	35	6.75	74	**185 689**	**LFMBP-¼-H**
H4 ... H7	G½	1	48	21.7	126	**162 827**	**LFMBP-½-H**

Condensate drain WA

Technical data

Function

Temperature range
0 ... +60 °C

Input pressure
0 ... 16 bar

Note

In order to close, the automatic condensate drain type WA-2 requires a flow rate of 125 l/min; this sets in at approx. 1.5 bar.

For attachment to service units and compressed air networks/systems. Condensate present in the compressed air is separated in suitable filters. The condensate that accumulates must be emptied from time to time, as otherwise it would be drawn in and could lead to faults in the downstream elements. The devices shown perform this task automatically.

They contain a float which opens when a certain condensate level is achieved. The accumulated condensate is then emptied.
With an additional, installed manual override, condensate emptying can also be performed manually.

- Automatic emptying after the max. fill level has been reached
- Automatic emptying after the operating pressure p < 0.5 bar is switched off
- Manual actuation during operation is possible

General technical data		
Type	WA-1-B	WA-2
Pneumatic connection	M9	M9
Condensate drain connection	G¼	PK-4
Design	External, mechanically-operated, fully automatic condensate drain valve	
Operating medium	Water	
Type of mounting	In-line installation	
Mounting position	Vertical, ±10°	Vertical, ±5°
Input pressure [bar]	4 ... 16	0 ... 14
Valve function	2/2-way single solenoid valve, closed	2/2-way single solenoid valve, open
Manual override facility	Pushing	

Ambient conditions		
Type	WA-1-B	WA-2
Ambient temperature [°C]	0 ... +60	0 ... +50
Temperature of medium [°C]	0 ... +60	0 ... +50
Corrosion resistance CRC[1)]	2	

1) Corrosion resistance class 2 according to Festo standard 940 070
Components requiring moderate corrosion resistance. Externally visible parts with primarily decorative surface requirements which are in direct contact with a surrounding industrial atmosphere or media such as cooling or lubricating agents.

Weights [g]		
	WA-1-B	WA-2
Condensate drain	210	92

Condensate drain WA

Technical data

Materials

Sectional view

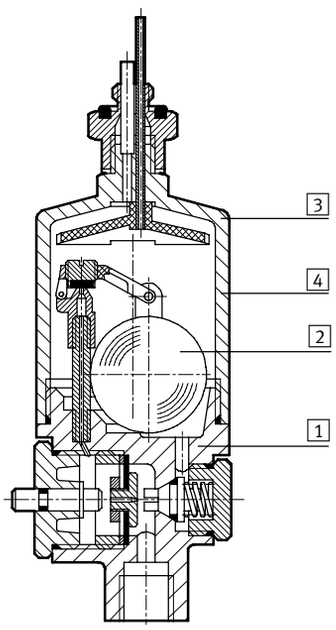

Condensate drain	WA-1-B	WA-2
1 Housing	Brass	Brass
2 Float	Polypropylene	Polyacetate
3 Cover	Polyamide	Wrought aluminium alloy
4 Bowl	–	Polycarbonate
– Seals	Nitrile rubber	Nitrile rubber

Actuating force F for manual actuation as a function of supply pressure p

WA-1-B

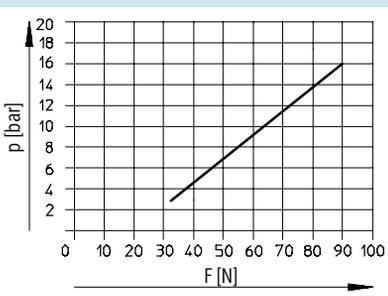

Primary pressure p1 = 7 bar

WA-2

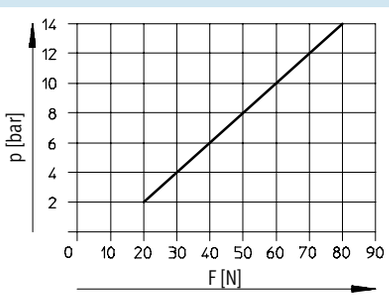

Primary pressure p1 = 7 bar

Max. possible condensate flow rate Q as a function of input pressure p

WA-2

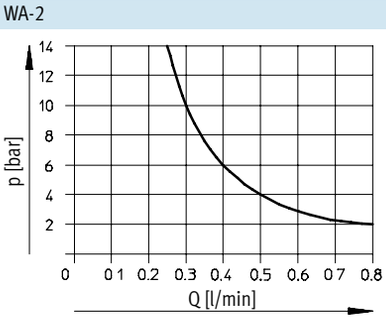

Primary pressure p1 = 7 bar

Condensate drain WA

Technical data

FESTO

Dimensions

WA-1-B

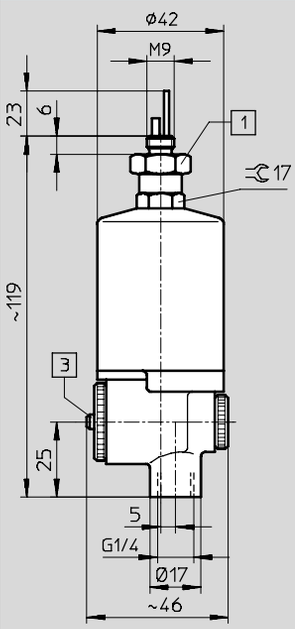

WA-2

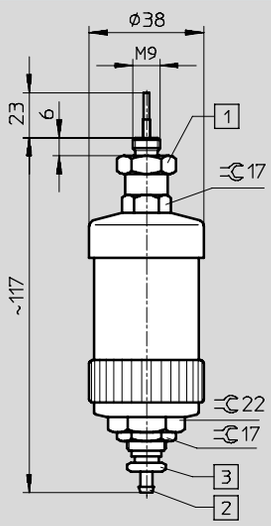

1 Adapter SW17

2 Barbed fitting for plastic tubing type PCN-4

3 Manual override facility

Ordering data

Type	Part No.	Type
WA-1-B	**158 497**	**WA-1-B**
WA-2	**152 810**	**WA-2**

Condensate drain PWEA

Technical data

FESTO

Function

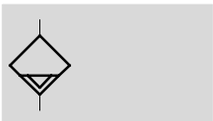

Temperature range
+1 ... +60 °C

Operating pressure
0.8 ... 16.0 bar

Condensate passes through the port in the bottom of the filter bowl into the attached condensate drain valve, where it is collected in a reservoir. A capacitive sensor detects once the maximum filling level is reached. The condensate escapes into the atmosphere via the opening diaphragm valve through the discharge line. The diaphragm valve closes again after a specified response time. A residual amount of condensate remains in the reservoir so that no compressed air can escape into the discharge line.

- Fully automatic condensate drain with integrated electrical control system
- Interface for communicating with master control device
- Reliable thanks to contactless capacitive sensor
- Can be used with service units or simply in piping systems
- Operated via touch-sensitive keys or electrical interface
- Ready status and switching status indicated via LEDs and electrical interface

General technical data					
		PWEA-AP-3D	PWEA-AC-6A	PWEA-AC-7A	PWEA-AC-3D
Pneumatic connection		G½			
Condensate drain connection		PK-8			
Design		Fully automatic condensate drain valve with electrical control interface			
Operating medium		Compressed air			
Type of mounting		In-line installation			
Mounting position		Vertical ±5°			
Operating pressure	[bar]	0.8 ... 16.0			
Valve function		3/2-way single solenoid valve, closed			
Manual override facility		Pushing			
Electrical					
Nominal operating voltage	[V DC]	24	–	–	24
	[V AC]	–	110	230	–
Electrical connection		M12x1 plug, 5-pin	Cable conduit fitting Pg9		
Nominal power of condensate drain	[W]	2			
Alarm output		Contacting			
Protection class (IEC 60529)		IP65			
Electrical protection class		III	II	II	III

Ambient conditions		
Ambient temperature	[°C]	+1 ... +60
Temperature of medium	[°C]	+1 ... +60
Corrosion resistance class	CRC[1)]	2

1) Corrosion resistance class 2 according to Festo standard 940 070
Components requiring moderate corrosion resistance. Externally visible parts with primarily decorative surface requirements which are in direct contact with a normal industrial environment or media such as coolants or lubricating agents.

Condensate drain PWEA

Technical data

FESTO

Materials	
Housing	Plastic
Condensate reservoir	Wrought aluminium alloy
Seals	Nitrile rubber, fluorocarbon rubber
Note on materials	Free of copper, PTFE and silicone

Weight [g]	
PWEA	700

Dimensions

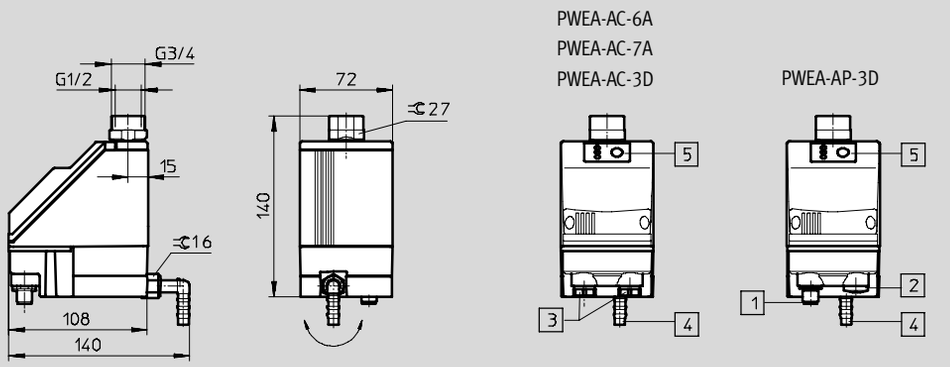

1 M12x1 plug, 5-pin for SIM-M12-5GD-...
2 Plug screw
3 Cable conduit fitting Pg9
4 Connection 360° rotatable for plastic tubing PUN-H-12x2-...
5 Touch-sensitive keypad with LED display

Ordering data

Part No.	Type
538 678	**PWEA-AP-3D**
538 679	**PWEA-AC-6A**
538 680	**PWEA-AC-7A**
538 681	**PWEA-AC-3D**

Pressure boosters DPA

Peripherals overview and type codes

FESTO

Peripherals overview

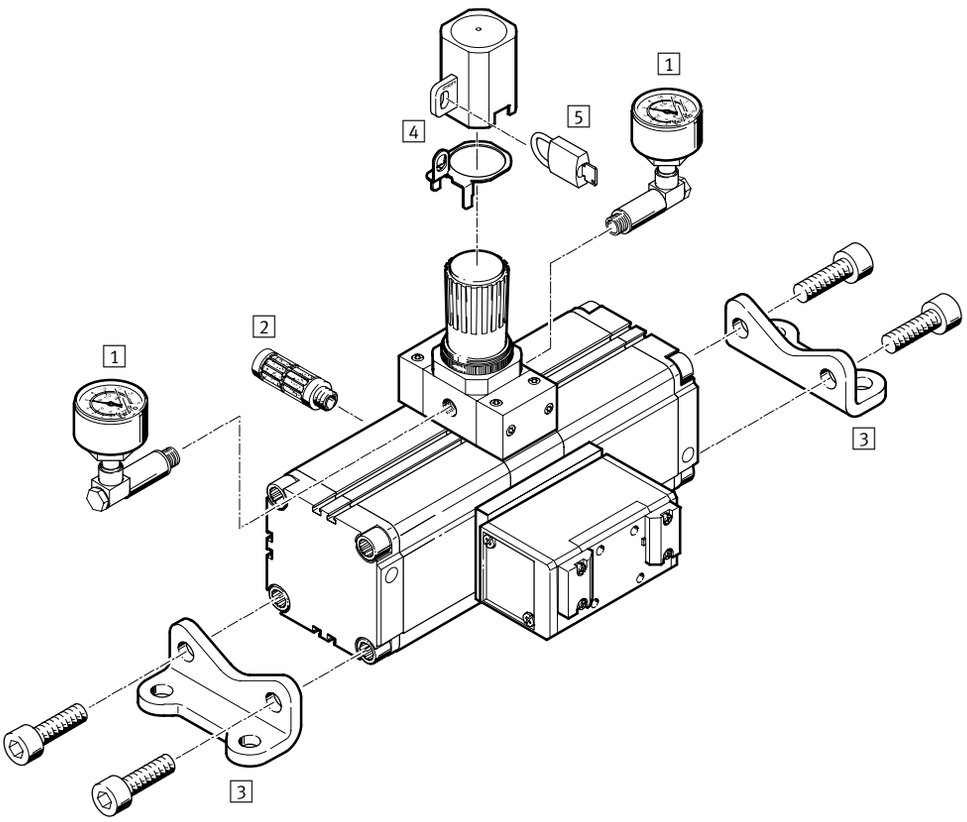

Mounting attachments and accessories	Brief description	➔ Page
1 Pressure gauge set MA-SET	The pressure gauge set is used to monitor the input and high pressure	3 / 4.7-5
2 Silencers U	The silencers are provided to reduce noise at the valve exhaust port	3 / 4.7-5
3 Foot mounting HUA	The pressure booster can be attached to other machine parts by means of the two foot mountings	3 / 4.7-5
4 Regulator lock LRVS with lock plate	Prevents unintentional, and in conjunction with an LRVS padlock, unauthorised adjustment of the rotary knob	3 / 4.7-6
5 Padlock LRVS-D	Accessory for LRVS	3 / 4.7-6

Type codes

DPA	–	63	–	16

Basic function	
DPA	Pressure boosters

Piston ∅ [mm]	
63	
100	

Output pressure [bar]	
10	4 … 10
16	4 … 16

Pressure boosters DPA

Technical data

Function

Temperature range
+5 ... +60 °C

Input pressure
2 ... 10 bar

Note

Pressure boosters do not replace a compressor, but are intended for the occasional boosting of compressed air.

Note

The regulator is supplied with a non-compressed regulator spring. After the input pressure is applied, the regulator spring is pretensioned by turning the regulating knob until the desired output pressure is achieved. A pressure gauge is strongly recommended to monitor the output pressure. The regulator setting can be secured against unauthorised adjustment by means of a regulator lock.

The pressure booster is a twin-piston pressure intensifier that can compress air.
When the DPA is pressurised with compressed air, integrated directional control and non-return valves automatically facilitate pressure build-up on the secondary side up to twice the normal operating pressure, depending on the flow rate.
The air supply to both drive pistons is controlled by a pneumatic directional control valve, which reverses automatically when the stroke end-position is reached.
The output pressure is freely selectable; it lies between the system pressure and the maximum double value.

The reference value is set using a manually operated regulator, which supplies compressed air to the working pistons on the secondary side and ensures stable operation of the booster.
The booster starts automatically when the system pressure is applied and the desired output pressure has not yet been reached.
When the output pressure is reached, it stops operating automatically but restarts if the pressure drops again.

All benefits at a glance
- Any mounting position
- Long service life
- Compact construction and good design
- Mounting option with components from the ADVU standard range
- Minimal loss of volume with valve activation
- Short filling times

General technical data					
Type		DPA-63-10	DPA-100-10	DPA-63-16	DPA-100-16
Pneumatic connection		G⅜	G½	G⅜	G½
Operating medium		Compressed air, filtered, unlubricated, grade of filtration 5µm			
Design		Twin-piston pressure intensifier			
Mounting position		Any			
Input pressure p1	[bar]	2 ... 8		2 ... 10	
Output pressure p2	[bar]	4 ... 10[1)]		4 ... 16[1)]	
Pressure indicator		G⅛ prepared	G¼ prepared	G⅛ prepared	G¼ prepared

1) The differential pressure between the input and output pressure must be at least 2 bar.
Note: This product conforms with the ISO 1179-1 standard and the ISO 228-1 standard.

Ambient conditions		
Ambient temperature	[°C]	+5 ... +60
Corrosion resistance	CRC[1)]	2

1) Corrosion resistance class 2 according to Festo standard 940 070
Components requiring moderate corrosion resistance. Externally visible parts with primarily decorative surface requirements which are in direct contact with a surrounding industrial atmosphere or media such as cooling or lubricating agents.

Pressure boosters DPA

Technical data

Weights [g]				
	DPA-63-10	DPA-100-10	DPA-63-16	DPA-100-16
Pressure boosters	6,000	13,000	6,000	13,000

Recommended tubing		
	For input pressure	For output pressure
DPA-63	PAN-16x2	PAN-12x1,75
DPA-100	P-19 PAN-16x2	PAN-16x2

Materials

Sectional view

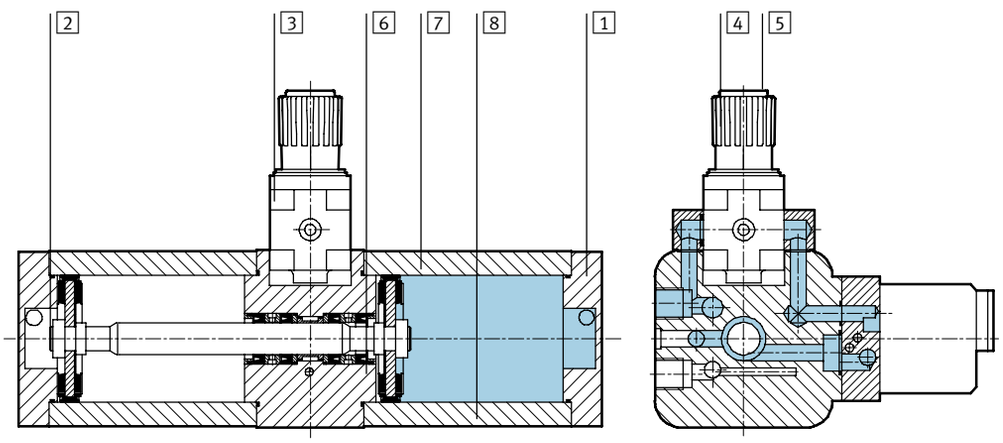

Pressure boosters		
1	Plug cap	Aluminium
2	Round nut	Galvanised steel
3	Valves	Die-cast aluminium, polyacetate
4	Rotary knob	Acetal
5	Protective cover	Acrylic butadiene styrene
6	Centre bit	Aluminium
7	Housing	Die-cast zinc
8	Cylinder barrel	Aluminium
–	Seals, regulator	Nitrile rubber
–	Seals, valve	Nitrile rubber

Flow rate at input q_{in} and flow rate at output q_{out} as a function of output pressure p_{out}

DPA-63

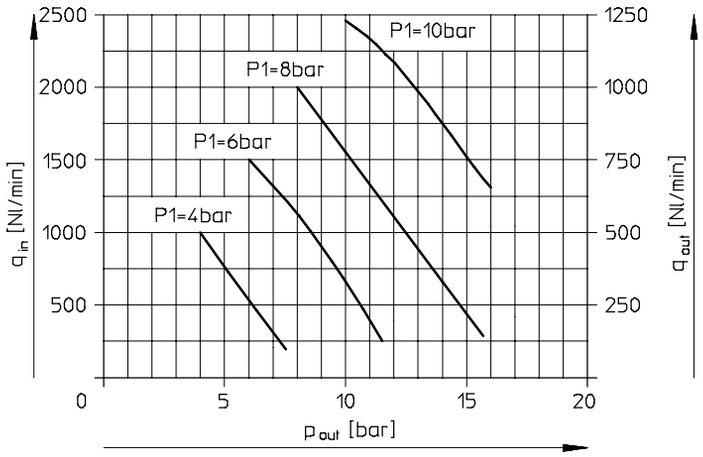

DPA-100

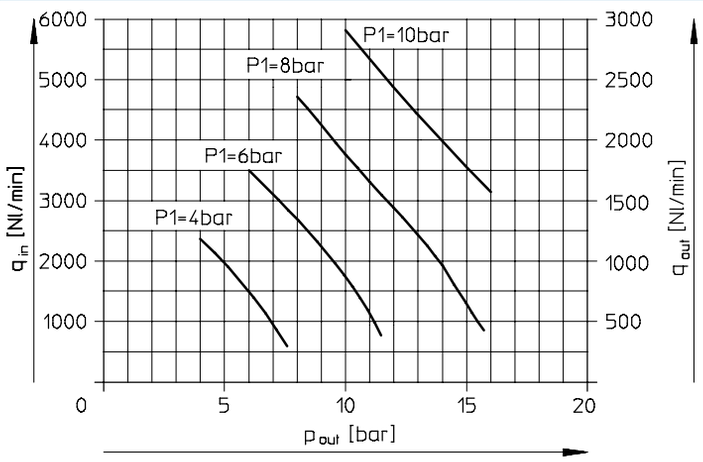

FESTO

Dimensions

Download CAD data ➔ **www.festo.com/en/engineering**

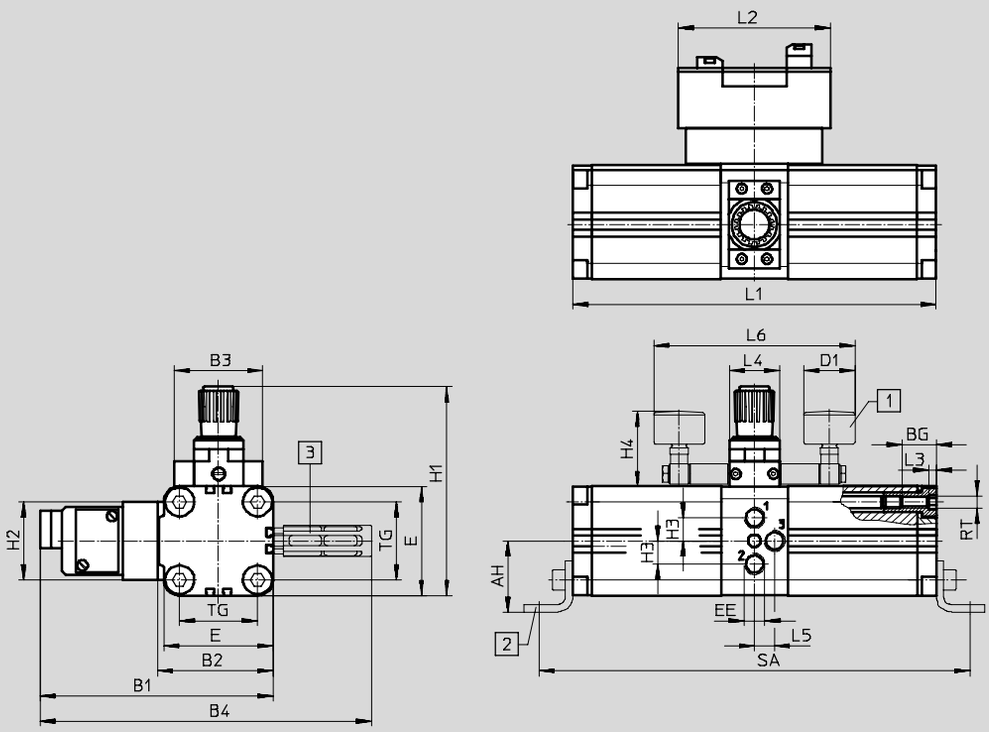

1 Pressure gauge set 2 Foot mounting HUA 3 Silencer U

Type	AH	B1	B2	B3	B4	BG	D1 ∅	E	EE	H1	H2
DPA-63-10	56.5	187	92.5	70	266	25	41	88	G3/8	169	62
DPA-63-16											
DPA-100-10	81	244	133	102	352	30		128	G1/2	244	71
DPA-100-16											

Type	H3	H4	L1	L2	L3	L4	L5	L6	RT	TG	SA
DPA-63-10	17.5	60	289	122	6	40	19	161	M10	62	343
DPA-63-16											
DPA-100-10	27	73	367	145.5		55	11	175		103	433
DPA-100-16											

Note: This product conforms with the ISO 1179-1 standard and the ISO 228-1 standard.

Ordering data

Size	Output pressure 4 ... 10 bar Part No.	Type	Output pressure 4 ... 16 bar Part No.	Type
63	**184 518**	**DPA-63-10**	**193 392**	**DPA-63-16**
100	**184 519**	**DPA-100-10**	**188 399**	**DPA-100-16**

FESTO

Foot mounting HUA

Material:
Galvanised steel
Free of copper, PTFE and silicone

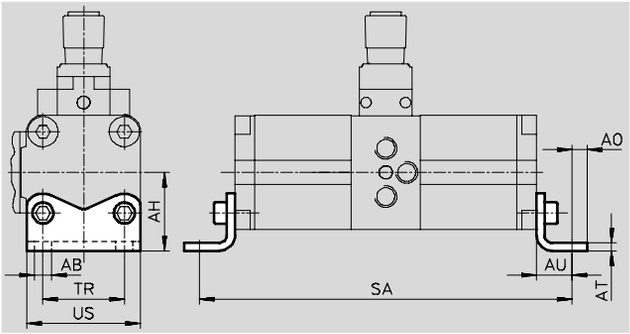

Ordering data										
Size	AB ∅	AH	AO	AT	AU	SA	TR	US	Part No.	Type
63	11	56.5	11.75	6	27	343	62	85.5	**157 315**	**HUA-63**
100	13.5	81	11.75	8	33	433	103	126.5	**157 317**	**HUA-100**

Pressure gauge set DPA-MA
If the pressure gauge scale is to be specifically aligned, PTFE sealing tape must be used instead of the included sealing rings.

Material:
Housing: Acrylic butadiene styrene
Window shield: Polystyrene
Connection piece: Brass

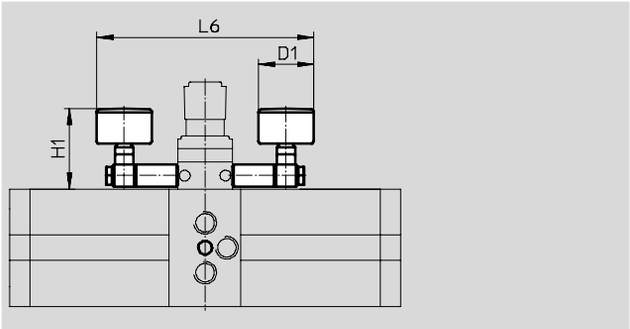

Ordering data					
Size	D1 ∅	H1	L6	Part No.	Type
63-10	41	60	161	**526 096**	**DPA-63-10-MA-SET**
63-16				**526 097**	**DPA-63-16-MA-SET**
100-10	41	73	175	**526 098**	**DPA-100-10-MA-SET**
100-16				**526 099**	**DPA-100-16-MA-SET**

Silencer U

Material:
Housing: Die-cast aluminium
Insert: Polyethylene
Free of copper, PTFE and silicone

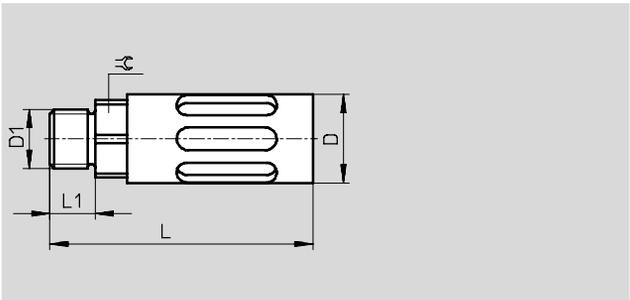

Ordering data							
Connection	D	D1	L	L1	⬡	Part No.	Type
G⅜	25	G⅜	88.5	10.5	19	**6843**	**U-⅜-B**
G½	28	G½	120	14	24	**6844**	**U-½-B**

Core Range

FESTO

Regulator lock LRVS

Material:
Cap: Polyacetate
Lock plate: Steel
Knurled nut: Aluminium

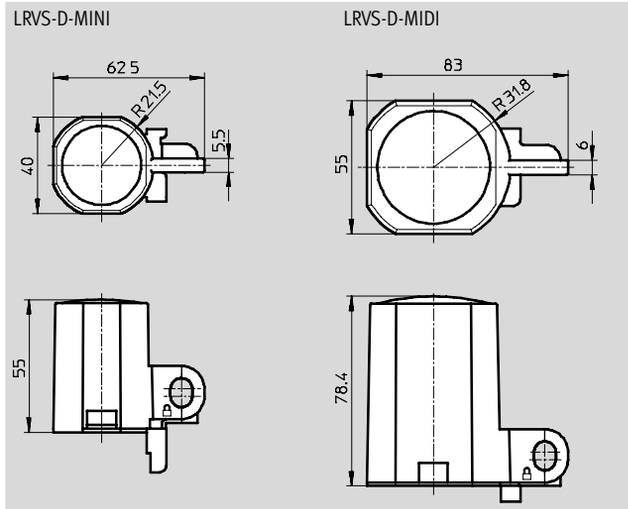

Ordering data			
Size	Weight [g]	Part No.	Type
63	40	**193 781**	**LRVS-D-MINI[1)]**
100	60	**193 782**	**LRVS-D-MIDI[1)]**

1) Free of copper, PTFE and silicone

Padlock LRVS-D

Material:
Housing: Brass

Ordering data			
	Weight [g]	Part No.	Type
Padlock	120	**193 786**	**LRVS-D**

Pressure gauge MA, DIN EN 837-1

Technical data

Function

Temperature range
−20 ... +60 °C

Technical data			
Nominal size	40	50	63
Pneumatic connection	R⅛, G¼, R¼	G¼	G¼
Operating medium	Liquid media		
	Gaseous media		
	Not permitted: Oxygen		
	Not permitted: Acetylene		
Design	Bourdon tube pressure gauge		
Conforms to	DIN EN 837-1		
Type of mounting	Can be screwed in		
Connection position	Centre, rear side		
Ambient temperature [°C]	−20 ... +60		
Accuracy of measurement, class	2.5		
Factor, continuous load	0.75		
Factor, intermittent load	0.66		
Protection class	IP43		
For MS series service units	MS4/MS6	–	–
Materials	Housing: Acrylic butadiene styrene		
	Window shield: Polystyrene		
	Threaded plug: Brass		
Weight [g]	60	70	80

Indicating range				
[bar]	[psi]	40	50	63
0 ... 1	0 ... 14.5	–	–	■
0 ... 2.5	0 ... 36	–	■	■
0 ... 6	0 ... 87	■	–	–
0 ... 10	0 ... 145	■	■	■
0 ... 16	0 ... 232	■	■	■
0 ... 25	0 ... 360	■	–	–

FESTO

Dimensions Download CAD data ➔ **www.festo.com/en/engineering**

MA-40 R¼

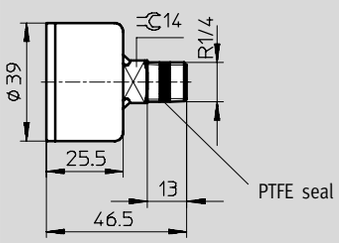

MA-40 R⅛

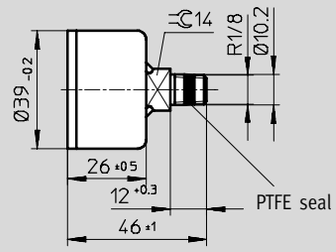

MA-40 G¼

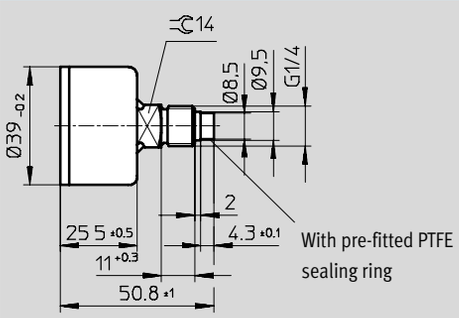

MA-50/63 G¼

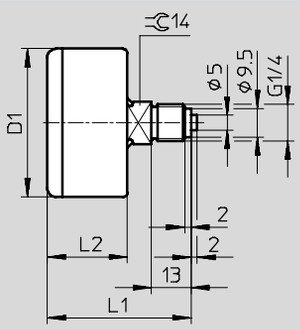

Type	D1 ∅	L1	L2
MA-50	49	47.5	26.5
MA-63	61.5	48.5	27.5

Pressure gauge MA, DIN EN 837-1

Technical data

FESTO

Ordering data					
Nominal size	Pneumatic connection	Indicating range [bar]	Indicating range [psi]	Part No.	Type
40	R⅛	0 … 10	0 … 145	**162 835**	**MA-40-10-⅛-EN**
		0 … 16	0 … 232	**162 836**	**MA-40-16-⅛-EN**
		0 … 25	0 … 360	**526 167**	**MA-40-25-⅛-EN**
40	G¼	0 … 6	0 … 87	**183 899**	**MA-40-6-G¼-EN**
		0 … 10	0 … 145	**183 900**	**MA-40-10-G¼-EN**
		0 … 16	0 … 232	**183 901**	**MA-40-16-G¼-EN**
		0 … 25	0 … 360	**183 902**	**MA-40-25-G¼-EN**
40	R¼	0 … 6	0 … 87	**187 078**	**MA-40-6-R¼-EN**
		0 … 10	0 … 145	**187 079**	**MA-40-10-R¼-EN**
		0 … 16	0 … 232	**187 080**	**MA-40-16-R¼-EN**
		0 … 25	0 … 360	**187 081**	**MA-40-25-R¼-EN**
50	G¼	0 … 2.5	0 … 36	**162 837**	**MA-50-2,5-¼-EN**
		0 … 10	0 … 145	**162 838**	**MA-50-10-¼-EN**
		0 … 16	0 … 232	**162 839**	**MA-50-16-¼-EN**
63	G¼	0 … 1	0 … 14.5	**162 844**	**MA-63-1-¼-EN**
		0 … 2.5	0 … 36	**162 845**	**MA-63-2,5-¼-EN**
		0 … 10	0 … 145	**162 840**	**MA-63-10-¼-EN**
		0 … 16	0 … 232	**162 841**	**MA-63-16-¼-EN**

Core Range

Pressure gauge MA, DIN EN 837-1, with red-green range

Technical data

FESTO

Function

Temperature range
–20 ... +60 °C

The adjustable red-green range provides additional safety when monitoring compressed air.

With the two red segments above the pressure gauge scale along with the printed green segment it is possible to individually limit the desired pressure range.

This coloured demarcation enables you to recognise immediately whether or not the pressure is in the permitted tolerance range.

Technical data			
Nominal size	40	50	63
Pneumatic connection	R⅛	R¼	R¼
Operating medium	Liquid media		
	Gaseous media		
	Not permitted: Oxygen		
	Not permitted: Acetylene		
Design	Bourdon tube pressure gauge		
Type of mounting	Can be screwed in		
Connection position	Centre, rear side		
Ambient temperature [°C]	–20 ... +60		
Accuracy of measurement, class	2.5		
Factor, continuous load	0.75		
Factor, intermittent load	0.66		
Protection class	IP43		
Materials	Housing: Acrylic butadiene styrene		
	Window shield: Polystyrene		
Weight [g]	62	76	88

Indicating range			
Nominal size	40	50	63
[bar]			
0 ... 2.5	–	■	■
0 ... 10	■	■	■
0 ... 16	■	■	■
[MPa]			
0 ... 0.25	–	–	■
0 ... 1	■	■	■
0 ... 1.6	■	■	■
[psi]			
0 ... 36	–	■	■
0 ... 145	■	■	■
0 ... 232	■	■	■

Pressure gauge MA, DIN EN 837-1, with red-green range

Technical data

FESTO

Dimensions Download CAD data ➔ **www.festo.com/en/engineering**

MA-...-E-RG

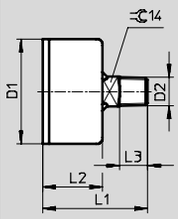

Type	D1 ∅ ±0.5	D2	L1 ±1	L2 ±0.5	L3
MA-40-...-E-RG	39	R⅛	46	28	10
MA-50-...-E-RG	49	R¼	49	28	13
MA-63-...-E-RG	61.5	R¼	50.5	29.5	13

Ordering data

Nominal size	Pneumatic connection	Indicating range	Part No.	Type
Display unit [bar]				
40	R⅛	0 ... 10	**525 725**	**MA-40-10-R⅛-E-RG**
		0 ... 16	**525 726**	**MA-40-16-R⅛-E-RG**
50	R¼	0 ... 2.5	**525 727**	**MA-50-2,5-R¼-E-RG**
		0 ... 10	**525 728**	**MA-50-10-R¼-E-RG**
		0 ... 16	**525 729**	**MA-50-16-R¼-E-RG**
63	R¼	0 ... 2.5	**525 730**	**MA-63-2,5-R¼-E-RG**
		0 ... 10	**525 731**	**MA-63-10-R¼-E-RG**
		0 ... 16	**525 732**	**MA-63-16-R¼-E-RG**
Display unit [MPa]				
40	R⅛	0 ... 1	**526 778**	**MA-40-1,0-R⅛-MPA-E-RG**
		0 ... 1.6	**526 779**	**MA-40-1,6-R⅛-MPA-E-RG**
50	R¼	0 ... 0.25	**526 780**	**MA-50-0,25-R¼-MPA-E-RG**
		0 ... 1	**526 781**	**MA-50-1,0-R¼-MPA-E-RG**
		0 ... 1.6	**526 782**	**MA-50-1,6-R¼-MPA-E-RG**
63	R¼	0 ... 0.25	**526 783**	**MA-63-0,25-R¼-MPA-E-RG**
		0 ... 1	**526 784**	**MA-63-1,0-R¼-MPA-E-RG**
		0 ... 1.6	**526 785**	**MA-63-1,6-R¼-MPA-E-RG**
Display unit [psi]				
40	R⅛	0 ... 145	**526 786**	**MA-40-145-R⅛-PSI-E-RG**
		0 ... 232	**526 787**	**MA-40-232-R⅛-PSI-E-RG**
50	R¼	0 ...36	**526 788**	**MA-50-36-R¼-PSI-E-RG**
		0 ... 145	**526 789**	**MA-50-145-R¼-PSI-E-RG**
		0 ... 232	**526 790**	**MA-50-232-R¼-PSI-E-RG**
63	R¼	0 ... 36	**526 791**	**MA-63-36-R¼-PSI-E-RG**
		0 ... 145	**526 792**	**MA-63-145-R¼-PSI-E-RG**
		0 ... 232	**526 793**	**MA-63-232-R¼-PSI-E-RG**

Pressure gauge MA

Technical data

FESTO

Function

Temperature range
−20 ... +60 °C

Technical data					
Nominal size	23	27	40	50	63
Pneumatic connection	R⅛	M5	G⅛	G¼	G¼
Operating medium	–	Liquid media			
	Gaseous media				
	Not permitted: Oxygen				
	Not permitted: Acetylene				
Design	Bourdon tube pressure gauge				
Type of mounting	Can be screwed in				
Connection position	Centre, rear side				
Ambient temperature [°C]	−40 ... +60	0 ... +60	−20 ... +60		
Accuracy of measurement, class	–	4	2.5		
Factor, continuous load	–	0.75			
Factor, intermittent load	–	0.66			
Protection class	–	IP43			
For D series service units	–	MICRO	MINI	MIDI/MAXI	–
Materials	Housing: Acrylic butadiene styrene	Housing: Plastic	Housing: Acrylic butadiene styrene		
	Sight glass: Polystyrene	Sight glass: Plastic	Sight glass: Polystyrene		
	Threaded plug: Brass	Threaded plug: Brass	Threaded plug: Brass		
Weight [g]	16	11	70	70	70

Indicating range						
Nominal size		23	27	40	50	63
[bar]	[psi]					
0 ... 6	0 ... 87	■	–	–	–	–
0 ... 10	0 ... 145	■	–	■	■	–
0 ... 16	0 ... 232	■	–	■	■	–
0 ... 20	0 ... 290	■	–	–	–	–
0 ... 25	0 ... 360	■	–	–	–	■
[bar]						
0 ... 10		–	■	–	–	–
[MPa]						
0 ... 0.6		–	–	–	–	–
0 ... 1		–	■	■	■	–
0 ... 1.6		–	–	■	■	–
0 ... 2.5		–	–	■		–
[psi]						
0 ... 160		–	■	–	–	–

Pressure gauge MA

Technical data

FESTO

Dimensions Download CAD data ➔ **www.festo.com/en/engineering**

Nominal size 23

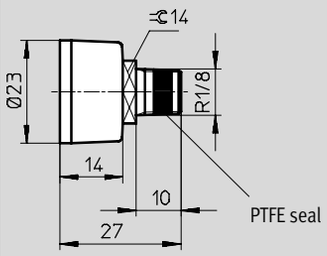

Nominal size 27

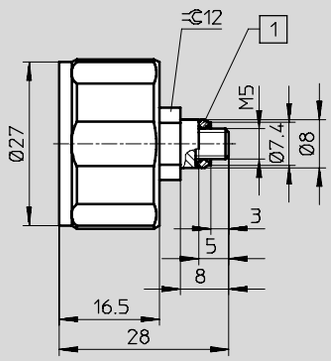

1 With pre-fitted aluminium sealing ring

Nominal size 40

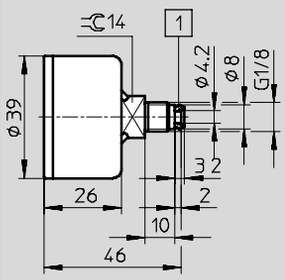

1 With pre-fitted aluminium sealing ring

Nominal size 50

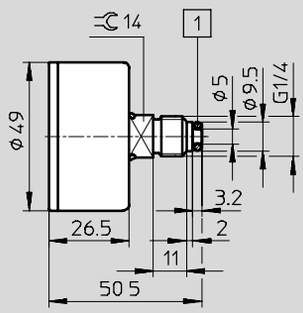

1 With pre-fitted aluminium sealing ring

Nominal size 63

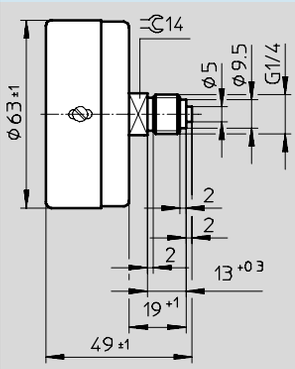

Pressure gauge MA

Technical data

Ordering data					
Nominal size	Pneumatic connection	Indicating range		Part No.	Type
		[bar]	[psi]		
23	R⅛	0 … 6	0 … 87	**183 896**	**MA-23-6-R⅛**
		0 … 10	0 … 145	**183 897**	**MA-23-10-R⅛**
		0 … 16	0 … 232	**183 898**	**MA-23-16-R⅛**
		0 … 20	0 … 290	**537 916**	**MA-23-20-R⅛**
40	G⅛	0 … 10	0 … 145	**359 874**	**MA-40-10-⅛**
		0 … 16	0 … 232	**345 395**	**MA-40-16-⅛**
50	G¼	0 … 10	0 … 145	**359 873**	**MA-50-10-¼**
		0 … 16	0 … 232	**356 759**	**MA-50-16-¼**
63	G¼	0 … 25	0 … 360	**7 169**	**MA-63-0,25**

Ordering data				
Nominal size	Pneumatic connection	Indicating range	Part No.	Type
Display unit [bar]				
27	M5	0 … 10	**526 323**	**MA-27-10-M5**
Display unit [MPa]				
27	M5	0 … 1	**526 324**	**MA-27-1,0-M5-MPA**
40	G¼	0 … 0.6	**184 285**	**MA-40-0,6-G¼-MPA**
		0 … 1	**184 286**	**MA-40-1,0-G¼-MPA**
		0 … 1.6	**184 287**	**MA-40-1,6-G¼-MPA**
		0 … 2.5	**184 288**	**MA-40-2,5-G¼-MPA**
40	G⅛	0 … 1	**192 732**	**MA-40-1-G⅛-MPA**
		0 … 1.6	**192 733**	**MA-40-1,6-G⅛-MPA**
50	G¼	0 … 1	**192 734**	**MA-50-1-G¼-MPA**
		0 … 1.6	**192 735**	**MA-50-1,6-G¼-MPA**
Display unit [psi]				
27	M5	0 … 160	**527 405**	**MA-27-160-M5-PSI**

Precision pressure gauge MAP, DIN EN 837-1

Technical data

Function

Temperature range
−20 ... +60 °C

Technical data					
Nominal size		40			
Pneumatic connection		R⅛			
Operating medium		Liquid media			
		Gaseous media			
		Not permitted: Oxygen			
		Not permitted: Acetylene			
Design		Bourdon tube pressure gauge			
Indicating range	[bar]	0 ... 1	0 ... 4	0 ... 6	0 ... 16
	[psi]	0 ... 14.5	0 ... 58	0 ... 87	0 ... 232
Conforms to		DIN EN 837-1			
Type of mounting		Can be screwed in			
Connection position		Centre, rear side			
Ambient temperature	[°C]	−20 ... +60			
Accuracy of measurement, class		1.6			
Factor, continuous load		0.75			
Factor, intermittent load		0.66			
Protection class		IP43			
Materials		Housing: Acrylic butadiene styrene			
		Sight glass: Polystyrene			
		Threaded plug: Brass			
Weight	[g]	60			

Dimensions Download CAD data ➔ **www.festo.com/en/engineering**

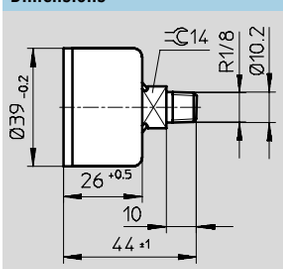

Ordering data					
Nominal size	Pneumatic connection	Indicating range [bar]	Indicating range [psi]	Part No.	Type
40	R⅛	0 ... 1	0 ... 14.5	**161 126**	**MAP-40-1-⅛-EN**
		0 ... 4	0 ... 58	**162 842**	**MAP-40-4-⅛-EN**
		0 ... 6	0 ... 87	**161 127**	**MAP-40-6-⅛-EN**
		0 ... 16	0 ... 232	**161 128**	**MAP-40-16-⅛-EN**

Core Range

Pressure gauge MA-QS

Technical data

Function

Temperature range
0 ... +60 °C

Technical data				
Nominal size		15		
Pneumatic connection		QS4	QS6	QS8
Operating medium		Filtered compressed air, lubricated or unlubricated		
Design		Bourdon tube pressure gauge without measuring mechanism		
Indicating range	[bar]	0 ... 10		
Type of mounting		Can be screwed in		
Connection position		Centre, rear side		
Ambient temperature	[°C]	0 ... +60		
Factor, continuous load		0.75		
Materials		Housing: Nickel plated steel		
Weight	[g]	8	10	13

Dimensions

Download CAD data ➔ **www.festo.com/en/engineering**

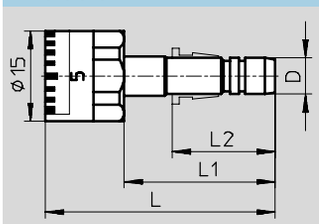

Dimensions and ordering data							
Nominal size D	Indicating range [bar]	Pneumatic connection	L	L1	L2	Part No.	Type
15	0 ... 10	QS4	36	23	15	**153 383**	**MA-15-10-QS-4**
		QS6	38	25	17	**153 384**	**MA-15-10-QS-6**
		QS8	34	21	18.5	**153 385**	**MA-15-10-QS-8**

Flanged pressure gauge FMA, DIN EN 837-1

Technical data

Function

Temperature range
−20 ... +60 °C

Technical data			
Nominal size	40	50	63
Pneumatic connection	G¼		
Operating medium	Liquid media		
	Gaseous media		
	Not permitted: Oxygen		
	Not permitted: Acetylene		
Design	Bourdon tube pressure gauge		
Conforms to	DIN EN 837-1		
Type of mounting	Panel mounting		
Connection position	Centre, rear side		
Ambient temperature [°C]	−20 ... +60		
Accuracy of measurement, class	2.5		
Factor, continuous load	0.75		
Factor, intermittent load	0.66		
Protection class	IP43		
Materials	Housing: Polystyrene		
	Sight glass: Styrene acrylonitrile copolymer		
	Threaded plug: Brass		
Weight [g]	80	100	120

Indicating range				
[bar]	[psi]	Nominal size		
		40	50	63
0 ... 2.5	0 ... 36	–	■	■
0 ... 10	0 ... 145	■	■	■
0 ... 16	0 ... 232	■	■	■

Flanged pressure gauge FMA, DIN EN 837-1

Technical data

FESTO

Dimensions Download CAD data ➔ **www.festo.com/en/engineering**

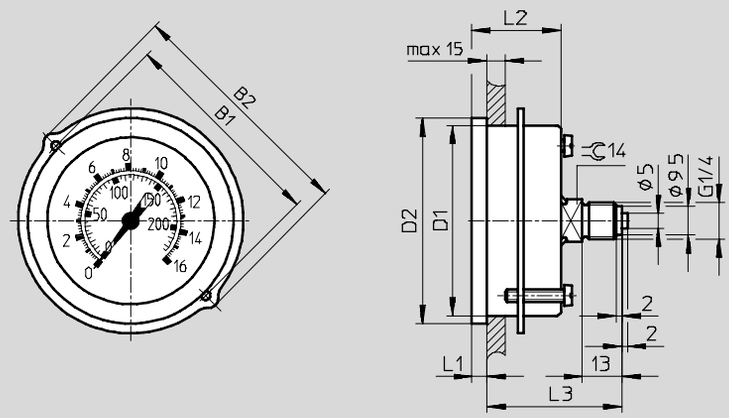

Type	B1	B2	D1 ∅	D2 ∅	L1	L2	L3
FMA-40	48	56	40	45	4.5	26.5	43
FMA-50	57	66	49.5	54	4.5	26.8	43.3
FMA-63	70	79	63	68	4.8	29.5	42.5

Ordering data

Nominal size	Pneumatic connection	Indicating range [bar]	Indicating range [psi]	Part No.	Type
40	G¼	0 … 10	0 … 145	**159 596**	**FMA-40-10-¼-EN**
		0 … 16	0 … 232	**159 597**	**FMA-40-16-¼-EN**
50	G¼	0 … 2.5	0 … 36	**159 598**	**FMA-50-2,5-¼-EN**
		0 … 10	0 … 145	**159 599**	**FMA-50-10-¼-EN**
		0 … 16	0 … 232	**159 600**	**FMA-50-16-¼-EN**
63	G¼	0 … 2.5	0 … 36	**159 601**	**FMA-63-2,5-¼-EN**
		0 … 10	0 … 145	**159 602**	**FMA-63-10-¼-EN**
		0 … 16	0 … 232	**159 603**	**FMA-63-16-¼-EN**

Flanged pressure gauge FMA

Technical data

Function

Temperature range
−10 ... +60 °C

Technical data		
Nominal size		63
Pneumatic connection		G¼
Operating medium		Gaseous media
Design		Aneroid pressure gauge
Indicating range	[bar]	0 ... 0.25
Indicating range	[psi]	0 ... 3.6
Type of mounting		Panel mounting
Connection position		Centre, rear side
Ambient temperature	[°C]	−10 ... +60
Accuracy of measurement, class		2.5
Factor, continuous load		0.75
Factor, intermittent load		0.66
Protection class		IP43
Materials		Housing: Steel
		Sight glass: Polymethylmethacrylate
		Threaded plug: Brass
Weight	[g]	240

Dimensions Download CAD data ➔ **www.festo.com/en/engineering**

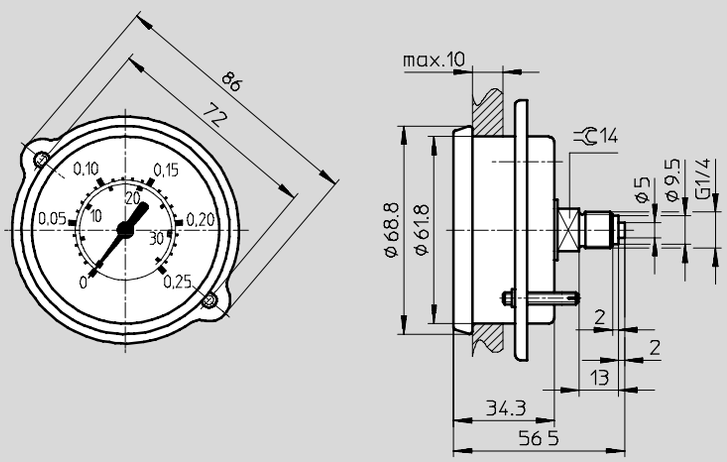

Ordering data					
Nominal size	Pneumatic connection	Indicating range [bar]	Indicating range [psi]	Part No.	Type
63	G¼	0 ... 0.25	0 ... 3.6	**225 783**	**FMA-63-0,25-C**

Precision pressure gauge FMAP, DIN EN 837-1

Technical data

FESTO

Function

Temperature range
–20 ... +60 °C

Technical data					
Nominal size		63			
Pneumatic connection		G¼			
Operating medium		Liquid media			
		Gaseous media			
		Not permitted: Oxygen			
		Not permitted: Acetylene			
Design		Bourdon tube pressure gauge			
Indicating range	[bar]	0 ... 1	0 ... 4	0 ... 6	0 ... 16
	[psi]	0 ... 14.5	0 ... 58	0 ... 87	0 ... 232
Conforms to		DIN EN 837-1			
Type of mounting		Panel mounting			
Connection position		Centre, rear side			
Ambient temperature	[°C]	–20 ... +60			
Accuracy of measurement, class		1.0			
Factor, continuous load		0.75			
Factor, intermittent load		0.66			
Protection class		IP43			
Materials		Housing: Polystyrene			
		Sight glass: Styrene acrylonitrile copolymer			
		Threaded plug: Brass			
Weight	[g]	120			

Dimensions Download CAD data ➔ **www.festo.com/en/engineering**

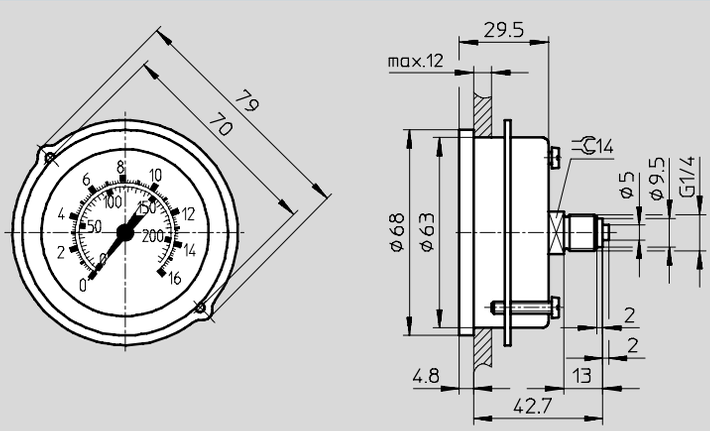

Ordering data					
Nominal size	Pneumatic connection	Indicating range [bar]	Indicating range [psi]	Part No.	Type
63	G¼	0 ... 1	0 ... 14.5	**161 129**	**FMAP-63-1-¼-EN**
		0 ... 4	0 ... 58	**162 843**	**FMAP-63-4-¼-EN**
		0 ... 6	0 ... 87	**161 130**	**FMAP-63-6-¼-EN**
		0 ... 16	0 ... 232	**161 131**	**FMAP-63-16-¼-EN**

Product Range and Company Overview

A Complete Suite of Automation Services

Our experienced engineers provide complete support at every stage of your development process, including: conceptualization, analysis, engineering, design, assembly, documentation, validation, and production.

Custom Automation Components
Complete custom engineered solutions

Custom Control Cabinets
Comprehensive engineering support and on-site services

Complete Systems
Shipment, stocking and storage services

The Broadest Range of Automation Components

With a comprehensive line of more than 30,000 automation components, Festo is capable of solving the most complex automation requirements.

Electromechanical
Electromechanical actuators, motors, controllers & drives

Pneumatics
Pneumatic linear and rotary actuators, valves, and air supply

PLCs and I/O Devices
PLC's, operator interfaces, sensors and I/O devices

Supporting Advanced Automation... As No One Else Can!
Festo is a leading global manufacturer of pneumatic and electromechanical systems, components and controls for industrial automation, with more than 12,000 employees in 56 national headquarters serving more than 180 countries. For more than 80 years, Festo has continuously elevated the state of manufacturing with innovations and optimized motion control solutions that deliver higher performing, more profitable automated manufacturing and processing equipment. Our dedication to the advancement of automation extends beyond technology to the education and development of current and future automation and robotics designers with simulation tools, teaching programs, and on-site services.

Quality Assurance, ISO 9001 and ISO 14001 Certifications

Festo Corporation is committed to supply all Festo products and services that will meet or exceed our customers' requirements in product quality, delivery, customer service and satisfaction.

To meet this commitment, we strive to ensure a consistent, integrated, and systematic approach to management that will meet or exceed the requirements of the ISO 9001 standard for Quality Management and the ISO 14001 standard for Environmental Management.

9001: CERTCC5-16248-2006-AQ-ESN-TGA
ISO 9001
ISO 14001
DNV
Certified Company
14001: CERTCC5-16248A-2006-AQ-ESN-TGA

© Copyright 2008, Festo Corporation. While every effort is made to ensure that all dimensions and specifications are correct, Festo cannot guarantee that publications are completely free of any error, in particular typing or printing errors. Accordingly, Festo cannot be held responsible for the same. For Liability and Warranty conditions, refer to our "Terms and Conditions of Sale", available from your local Festo office. All rights reserved. No part of this publication may be reproduced, distributed, or transmitted in any form or by any means, electronic, mechanical, photocopying or otherwise, without the prior written permission of Festo. All technical data subject to change according to technical update.

FSC
Printed on recycled paper at New Horizon Graphic, Inc., FSC certified as an environmentally friendly printing plant.

Festo North America

United States

Customer Resource Center
502 Earth City Expy., Suite 125
Earth City, MO 63045

For ordering assistance, or to find
your nearest Festo Distributor,
Call: 1.800.99.FESTO
Fax: 1.800.96.FESTO
Email: customer.service@us.festo.com

For technical support,
Call: 1.866.GO.FESTO
Fax: 1.800.96.FESTO
Email: product.support@us.festo.com

Headquarters
Festo Corporation
395 Moreland Road
P.O. Box 18023
Hauppauge, NY 11788
www.festo.com/us

Sales Offices

Appleton
N. 922 Tower View Drive, Suite N
Greenville, WI 54942

Boston
120 Presidential Way, Suite 330
Woburn, MA 01801

Chicago
1441 East Business Center Drive
Mt. Prospect, IL 60056

Dallas
1825 Lakeway Drive, Suite 600
Lewisville, TX 75057

Detroit - Automotive Engineering Center
2601 Cambridge Court, Suite 320
Auburn Hills, MI 48326

New York
395 Moreland Road
Hauppauge, NY 11788

Silicon Valley
4935 Southfront Road, Suite F
Livermore, CA 94550

Design and Manufacturing Operations

East: 395 Moreland Road, Hauppauge, NY 11788

Central: 1441 East Business Center Drive, Mt. Prospect, IL 60056

West: 4935 Southfront Road, Suite F, Livermore, CA 94550

Mexico

Headquarters
Festo Pneumatic, S.A.
Av. Ceylán 3, Col. Tequesquinahuac
54020 Tlalnepantla, Edo. de México
Call: 011 52 [55] 53 21 66 00
Fax: 011 52 [55] 53 21 66 65
Email: festo.mexico@mx.festo.com
www.festo.com/mx

Canada

Headquarters
Festo Inc.
5300 Explorer Drive
Mississauga, Ontario L4W 5G4
Call: 1.905.624.9000
Fax: 1.905.624.9001
Email: info.ca@ca.festo.com
www.festo.com/ca

Festo Worldwide

Argentina Australia Austria Belarus Belgium Brazil Bulgaria Canada Chile China Colombia Croatia Czech Republic Denmark Estonia Finland France Germany Great Britain Greece Hong Kong Hungary India Indonesia Iran Ireland Israel Italy Japan Latvia Lithuania Malaysia Mexico Netherlands New Zealand Norway Peru Philippines Poland Romania Russia Serbia Singapore Slovakia Slovenia South Africa South Korea Spain Sweden Switzerland Taiwan Thailand Turkey Ukraine United States Venezuela

www.festo.com