Cylinders with holding brake DFLC/G

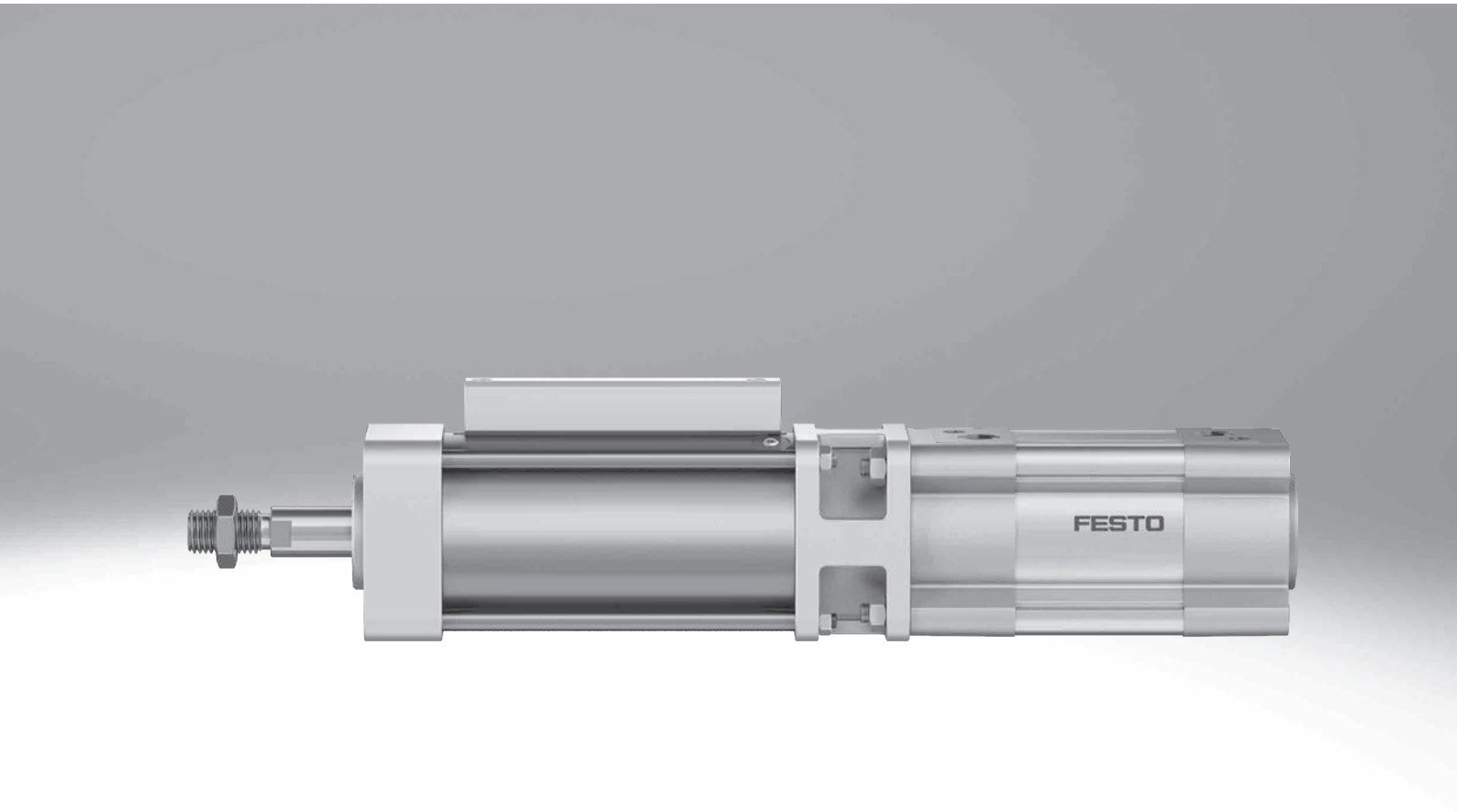

Characteristics

At a glance

Holding brakes are generally used to dynamically brake a movement or to prevent round rods of different lengths from starting up at any position. The double-acting cylinders with holding brake DFLC/G can brake or clamp the piston rod. During clamping, the piston rod is securely locked so that the application of external force does not produce any relative motion. A rod can be locked at any position along the stroke, whether in the end positions or the intermediate positions. This provides protection in the event of a pressure failure and secures the piston rod during intermediate stops for process operations.

- The clamping force is released when compressed air is supplied to the holding brake
- Static holding force up to 17000 N
- The cylinders with holding brake are based on ISO 15552 (previously also VDMA 24562, ISO 6431, NF E49 003.1, UNI 10290)

Note

The cylinders with holding brake DFLC/G-...-S are a safety device as defined in the Machinery Directive 2006/42/EC and have been tested and certified to relevant standards. Additional information is available at www.festo.com/sp → Certificates.

The cylinders with holding brake DFLC/G-...-EX4-S are suitable for use in ATEX zones in "static holding" mode.

Possible safety functions:

- Holding function: retaining the piston rod by clamping with frictional locking
- Emergency braking function: stopping the movement of the piston rod by clamping with frictional locking

The safety functions are triggered by switching off the compressed air supply or by the failure of the compressed air supply.

Cushioning

[PPV] Pneumatic cushioning adjustable at both ends

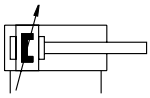

- The drive is fitted with pneumatic end-position cushioning, which can be adapted by the operator for maximum performance according to the moved mass and speed.
- Very powerful

Position sensing

[A] Via proximity switch

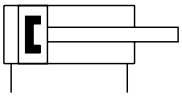

- For monitoring the switching status of the holding brake

Corrosion protection

[R3] High corrosion protection

- Protects the drive against corrosion

EU certification

[EX4] II 2GD

- ATEX category for gas II 2G
- ATEX category for dust II 2D
- Type of ignition protection for gas Ex h IIC T4 Gb
- Type of ignition protection for dust Ex h IIIC T120°C Db
- Explosion-proof ambient temperature −20 ≤ Ta ≤ +60

Certification

[S] Safety device

- To Machinery Directive 2006/42/EC

Type codes

001	Series	
DFLC	Cylinder with holding brake	

002	Piston diameter	
40	40	
63	63	
100	100	

003	Stroke	
...	10 ... 2000	

004	Cushioning	
PPV	Pneumatic cushioning, adjustable at both ends	

005	Position sensing	
A	For proximity sensor	

006	Corrosion protection	
	Standard	
R3	High corrosion protection	

007	EU certification	
	None	
EX4	II 2GD	

008	Certification	
S	Safety component to Machinery Directive 2006/42/EC	

Peripherals overview

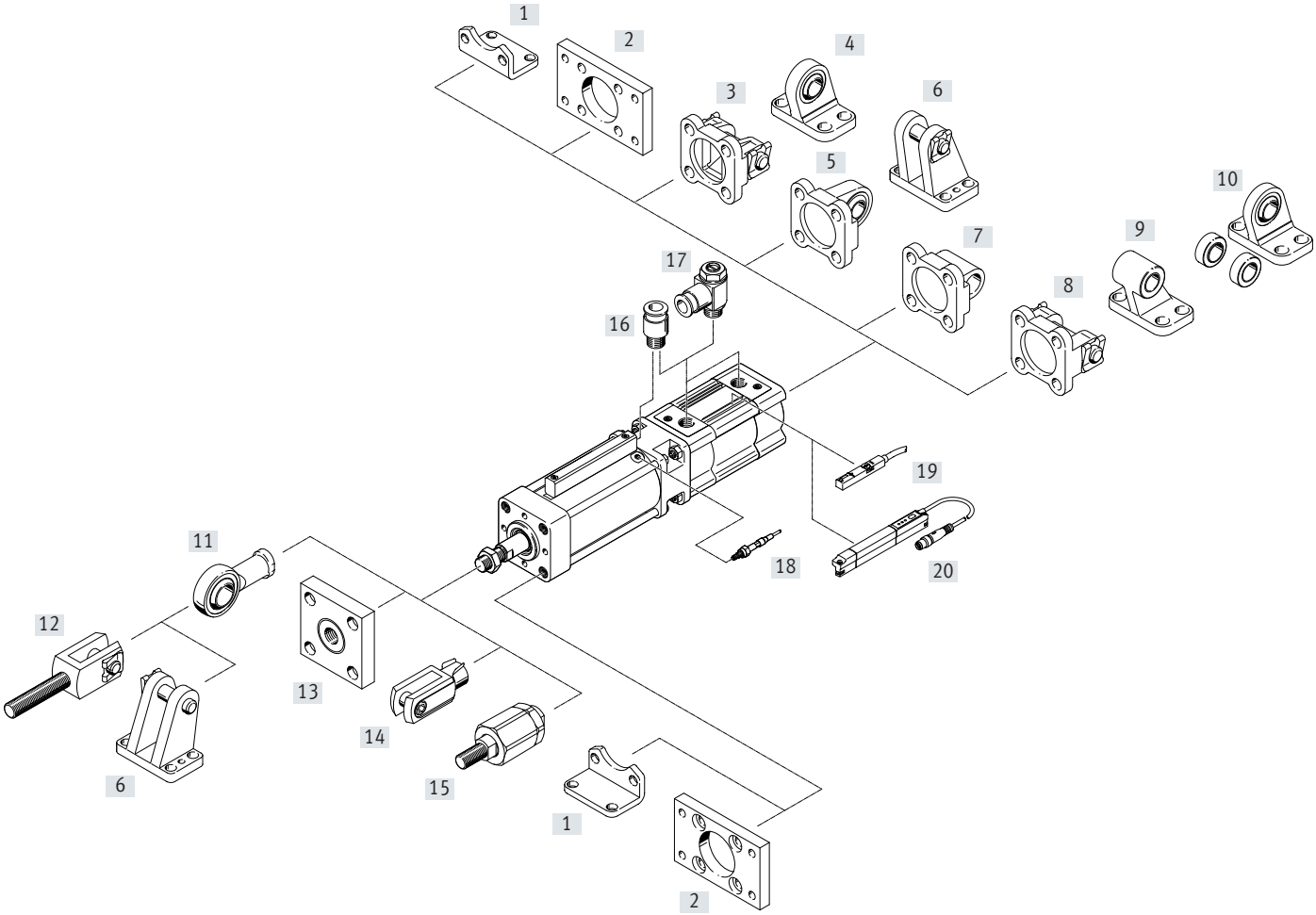

Peripherals overview

Accessories	Type/order code	Description	→ Page/Internet
[1]	Foot mounting HNC/CRHNC	For bearing or end caps	22
[2]	Flange mounting FNC/CRFNG	• For bearing or end caps • Suitable for emergency stop applications/dynamic braking	23
[3]	Swivel flange SNC	For end caps	25
[4]	Clevis foot LSNG	Weld-on, with spherical bearing	31
[5]	Swivel flange SNCS/SNCS-...-R3	With spherical bearing for end caps	26
[6]	Clevis foot LBG/LBG-...-R3	–	31
[7]	Swivel flange SNCL	For end caps	27
[8]	Swivel flange SNCB/SNCB-...-R3	For end caps	28
[9]	Clevis foot LNG/CRLNG	–	31
[10]	Clevis foot LSN	With spherical bearing	31
[11]	Rod eye SGS/CRSGS	With spherical bearing	32
[12]	Rod clevis SGA	With male thread	32
[13]	Coupling piece KSG	For compensating radial deviations	32
[14]	Rod clevis SG/CRSG	Permits a swivelling movement of the cylinder in one plane	32
[15]	Self-aligning rod coupler FK, CRFK	For compensating radial and angular deviations	32
[16]	Push-in fitting QS	For connecting compressed air tubing with standard O.D.	qs
[17]	One-way flow control valve GRLA	For speed regulation	35
[18]	Sensor kit DADG	• Inductive sensor kit for status sensing of the clamping function • Not included in scope of delivery	33
[19]	Proximity switch SMT-8M-A	• For sensing the piston position • Not included in scope of delivery	34
[20]	Position transmitter SDAT-MHS	• Continuously senses the position of the piston • Has an analogue output • Not included in scope of delivery	35

Note

Only flange mounting FNC/CRFNG is permissible for emergency stop applications/dynamic braking.
Additional accessories for this application are available on request.

Data sheet

Function

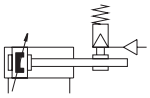

- Ø - Diameter
  40 ... 100 mm
- | - Stroke length
  10 ... 2000 mm

General technical data				
Piston diameter		40	63	100
Design		Piston		
		Piston rod		
		Profile barrel		
Variants		Piston rod at one end		
Mode of operation		Double-acting		
Pneumatic connection				
Cylinder		G1/4	G3/8	G1/2
Holding brake		G1/8	G1/8	G3/8
Piston rod thread		M12x1.25	M16x1.5	M20x1.5
Piston rod end		Male thread		
Cushioning		Pneumatic cushioning adjustable at both ends		
Cushioning length	[mm]	19	22	31
Position sensing		Via proximity switch		
Type of mounting		Via female thread		
		With accessories		
Type of clamping with active direction		At both ends		
		Clamping via spring force, released via compressed air		
Mounting position		Any		

Operating and environmental conditions				
Piston diameter		40	63	100
Cylinder				
Operating pressure	[bar]	0.6 ... 8		
Holding brake				
Min. release pressure	[bar]	3.8		
Max. permissible test pressure	[bar]	8		
Operating medium		Compressed air to ISO 8573-1:2010 [7:4:4]		
Note on operating/ pilot medium		Operation with lubricated medium not possible		
Ambient temperature[1)]	[°C]	–20 ... +80		–10 ... +80
Corrosion resistance class CRC[2)]				
[ ] Standard		1		
[R3] High corrosion protection		3		

1) Note operating range of proximity switches.
2) Corrosion resistance class CRC 1 to Festo standard FN 940070
Low corrosion stress. Dry internal application or transport and storage protection. Also applies to parts behind coverings, in the non-visible interior area, and parts which are covered in the application (e.g. drive trunnions).
Corrosion resistance class CRC 3 to Festo standard FN 940070
High corrosion stress. Outdoor exposure under moderate corrosive conditions. Externally visible parts with primarily functional surface requirements which are in direct contact with a normal industrial environment.

Data sheet

Safety characteristics			
Piston diameter	40	63	100
Conforms to standard	This product is based on ISO 15552 (previously also VDMA 24562, ISO 6431, NF E49 003.1, UNI 10290)		
Safety function	Holding and stopping a movement		
Performance Level (PL)	Stopping, holding, blocking a movement/category 1, Performance Level c		
Certification	German Technical Control Board (TÜV)		
Certificate issuing authority	German Technical Control Board (TÜV) CA 697		
CE marking[1)] (see declaration of conformity)	To EU Machinery Directive		

1) For information about the area of use, see the EC declaration of conformity at: www.festo.com/sp → Certificates.
If the devices are subject to usage restrictions in residential, commercial or light-industrial environments, further measures for the reduction of the emitted interference may be necessary.

ATEX			
Piston diameter	40	63	100
ATEX category for gas	II 2G		
Type of ignition protection for gas	Ex h IIC T4 Gb		
ATEX category for dust	II 2D		
Type of ignition protection for dust	Ex h IIIC T120°C Db		
Explosion-proof ambient temperature [°C]	−20 ≤ Ta ≤ +60		

Weight [g]			
Piston diameter	40	63	100
Basic weight with 0 mm stroke	2930	6185	19120
Additional weight per 10 mm stroke	37	62	101
Moving mass with 0 mm stroke	502	955	1940
Additional moving mass per 10 mm stroke	16	25	40

Forces [N]			
Piston diameter	40	63	100
Theoretical force at 6 bar, advancing	754	1870	4712
Theoretical force at 6 bar, retracting	633	1682	4418
Static holding force	1350	3300	8200

Note

The specified holding force refers to a static load. If this value is exceeded, slippage may occur. Dynamic forces occurring during operation must not exceed the static holding force if slippage is to be avoided. The holding brake is backlash-free in the clamped condition when varying loads are applied to the piston rod.

Lateral loads and bending moments on the piston rod can impair the function. (Make sure that the load on the piston rod is only in the direction of movement.)

Actuation:
The holding brake may only be released when the forces on the piston rod have reached equilibrium. Otherwise there is a risk of accidents due to the sudden movement of the piston rod. Blocking off the compressed air supply at both ends (e.g. with a 5/3-way valve) does not provide any safety.

Data sheet

Load mass m as a function of piston speed v_0

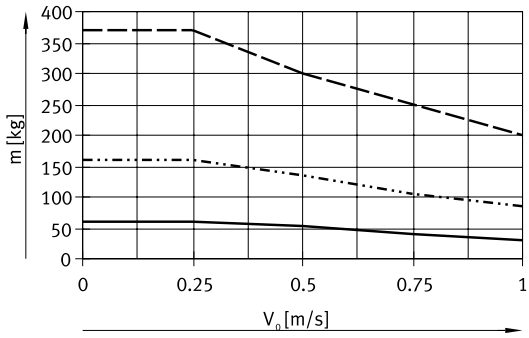

DFLC-100
DFLC-63
DFLC-40

Stopping distance sk_0 as a function of piston speed v_0

Ø 40

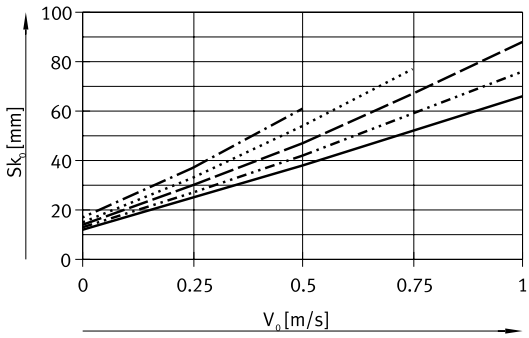

50 kg
40 kg
30 kg
20 kg
10 kg

Ø 63

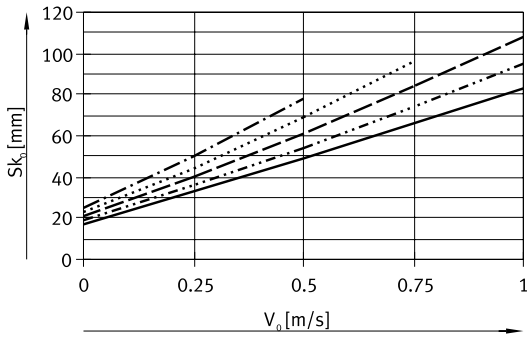

125 kg
100 kg
75 kg
50 kg
25 kg

Ø 100

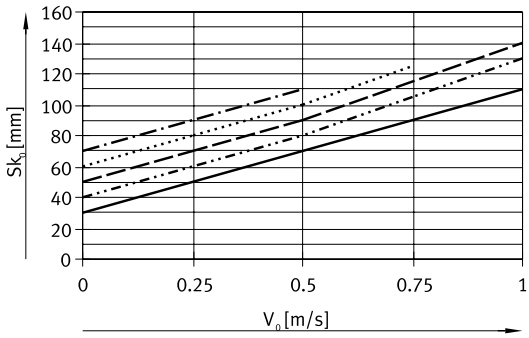

300 kg
250 kg
200 kg
150 kg
100 kg

Note

All data in the graphs is intended exclusively for the purposes of preselection when configuring the emergency braking function and must be checked mathematically and in practice prior to commissioning. Additional information is available at www.festo.com/sp ➔ User documentation.

Data sheet

Materials

Sectional view

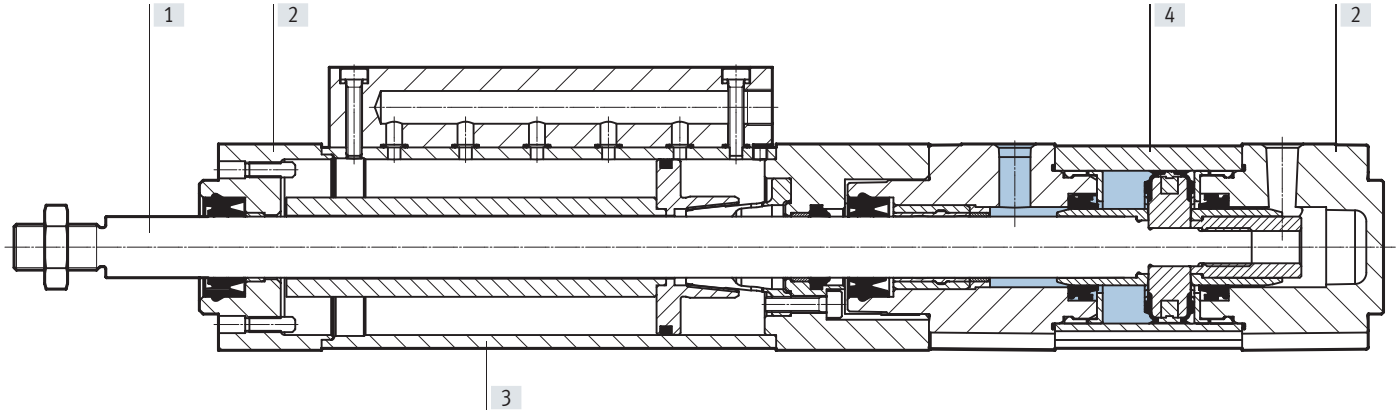

Cylinder with holding brake		
[1]	Piston rod	Hard-chrome-plated steel
[2]	Cover	Die-cast aluminium
		Wrought aluminium alloy
[3]	Housing	Steel
[4]	Cylinder barrel	Smooth-anodised wrought aluminium alloy
–	Seals	NBR
		TPE-U(PU)
–	Note on materials	RoHS-compliant

Data sheet

Dimensions Download CAD data ➔ www.festo.com

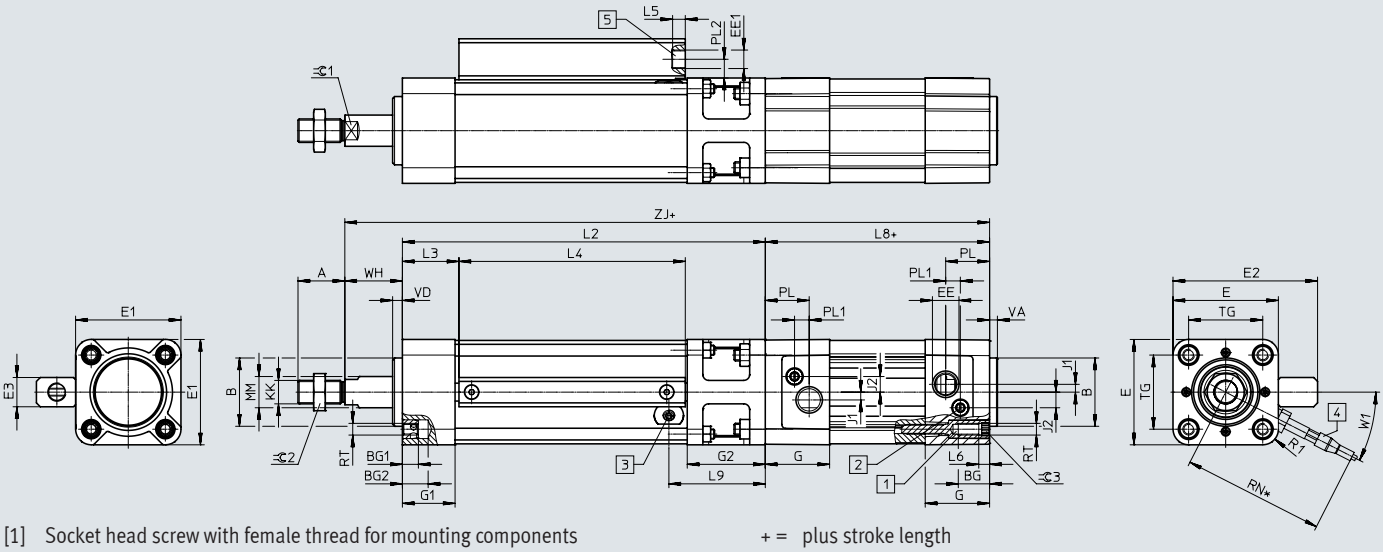

[1] Socket head screw with female thread for mounting components
[2] Adjusting screw for adjustable end-position cushioning
[3] Position for proximity switch (thread M6x0.75)
[4] Sensor kit DADG-D-F8
[5] Connection to release clamping function

+ = plus stroke length
* = installation space for sensor kit DADG-D-F8

Data sheet

⌀ [mm]	A -0.5	B ⌀ d11	BG min.	BG1	BG2	E ±0.8	E1 +0.5	E2 ±1	E3	EE
40	24	35	16	8	13.2	54	54	74.1	15	G1/4
63	32	45	16	9	14.8	78	75	98.1	15	G3/8
100	40	55	17	10	14.8	124	110	152.1	22	G1/2

⌀ [mm]	EE1	G	G1	G2	J1	J2	KK	L2 ±1	L3	L4
40	G1/8	33	27	40	4	8	M12x1.25	186	29	116
63	G1/8	40.5	30	44	6.25	12.75	M16x1.5	210	38.4	122.5
100	G3/8	48	35	54	10	13.5	M20x1.5	255	47.1	148.5

⌀ [mm]	L5	L6	L8+ ±0.4	L9	MM ⌀	PL	PL1	PL2	R1	RN
40	6.5	5.5	105	49.4	16	22.5	7.5	9.6	R8	98
63	6.5	6	121	53.6	20	27.5	9	9.6	R10	100
100	8	–	138	65.3	25	31.5	7.5	13.6	R15	120

⌀ [mm]	RT	TG ±0.3	VA -0.2	VD ±0.2	W1	WH +3.2/-1	ZJ+ +2.6/-0.4	=⊂1	=⊂2	=⊂3
40	M6	38	4	5	27°	28.7	319.7	13	19	6
63	M8	56.5	4	5	20°	35.9	366.9	17	24	8
100	M10	89	4	5	20°	49.3	442.3	22	30	6

Ordering data – Modular product system

Ordering table

Size		40	63	100	Conditions	Code		Enter code
Module no.		8073331	8073332	8073333				
Function		Cylinder with holding brake, double-acting				**DFLC**		DFLC
Piston diameter	[mm]	40	63	100		**–...**		
Stroke	[mm]	10 ... 2000				**–...**		
Cushioning		Pneumatic cushioning, adjustable at both ends				**–PPV**		–PPV
Position sensing		Via proximity switch				**A**		A
Corrosion protection		Standard						
		High corrosion protection				**–R3**		
EU certification		None						
		II 2GD				**–EX4**		
Certification		Safety device to Machinery Directive 2006/42/EC				**–S**		–S

Type codes

001	Series	
DFLG	Cylinder with holding brake	

002	Piston diameter	
160	160	

003	Stroke	
...	10 ... 2000	

004	Cushioning	
PPV	Pneumatic cushioning, adjustable at both ends	

005	Position sensing	
A	For proximity sensor	

006	Corrosion protection	
	Standard	
R3	High corrosion protection	

007	EU certification	
	None	
EX4	II 2GD	

008	Certification	
S	Safety component to Machinery Directive 2006/42/EC	

Peripherals overview

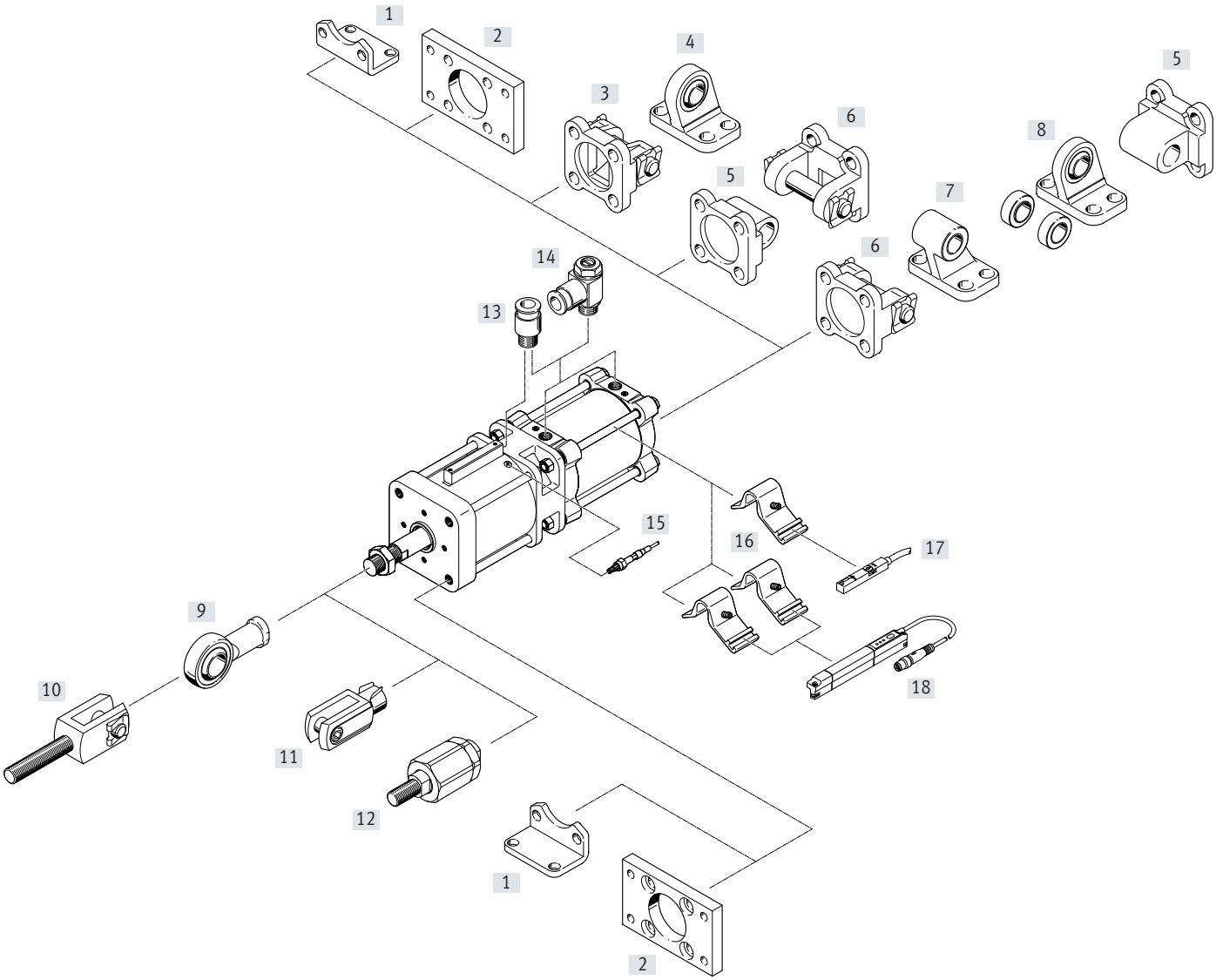

Peripherals overview

Accessories			
	Type/order code	Description	→ Page/Internet
[1]	Foot mounting HNG	For bearing and end caps, corresponds to MS1 to ISO 15552	22
[2]	Flange mounting FNG	• For bearing or end caps, corresponds to MF1/MF2 to ISO 15552 • Suitable for emergency stop applications/dynamic braking	24
[3]	Swivel flange SNG	For end caps	29
[4]	Clevis foot LSNG	With spherical bearing	31
[5]	Swivel flange SNGL	For end caps, corresponds to MP2 to ISO 15552	29
[6]	Swivel flange SNGB	For end caps, corresponds to MP2 to ISO 15552	30
[7]	Clevis foot LN	For swivel flange SNGB	31
[8]	Clevis foot LSN	With spherical bearing	31
[9]	Rod eye SGS	With spherical bearing	32
[10]	Rod clevis SGA	Suitable for spherical mounting of cylinders in conjunction with rod eye SGS	32
[11]	Rod clevis SG	Permits a swivelling movement of the cylinder in one plane	32
[12]	Self-aligning rod coupler FK	For compensating radial and angular deviations	32
[13]	Push-in fitting QS	For connecting compressed air tubing with standard O.D.	qs
[14]	One-way flow control valve GRLA	For speed regulation	35
[15]	Sensor kit DADG	• Inductive sensor kit for status sensing of the clamping function • Not included in scope of delivery	33
[16]	Sensor mounting DASP	For proximity switch SME-8M-A and position transmitter SDAT-MHS	35
[17]	Proximity switch SMT-8M-A	• For sensing the piston position • Can be integrated in the cylinder profile barrel • Not included in scope of delivery	34
[18]	Position transmitter SDAT-MHS	• Continuously senses the position of the piston • Has an analogue output • Can be integrated in the cylinder profile barrel • 2 sensor mountings DASP are required for mounting • Not included in scope of delivery	35

Note

Only flange mounting FNG is permissible for emergency stop applications/dynamic braking.

Additional accessories for this application are available on request.

Data sheet

Function

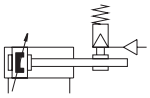

- Ø - Diameter
  160 mm
- | - Stroke length
  10 ... 2000 mm

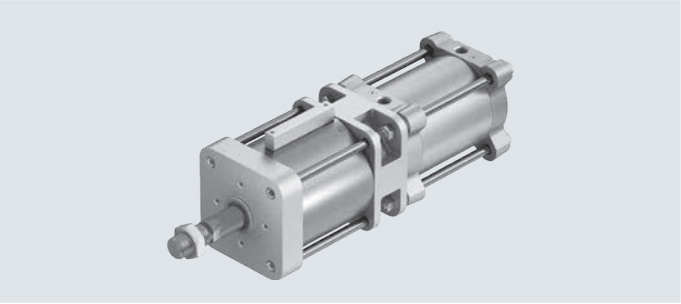

General technical data		
Piston diameter		160
Design		Piston
		Piston rod
		Profile barrel
Variants		Piston rod at one end
Mode of operation		Double-acting
Pneumatic connection		
Cylinder		G3/4
Holding brake		G3/8
Piston rod thread		M36x2
Piston rod end		Male thread
Cushioning		Pneumatic cushioning adjustable at both ends
Cushioning length	[mm]	48
Position sensing		Via proximity switch
Type of mounting		Via female thread
		With accessories
Type of clamping with active direction		At both ends
		Clamping via spring force, released via compressed air
Mounting position		Any

Operating and environmental conditions		
Piston diameter		160
Cylinder		
Operating pressure	[bar]	0.6 ... 8
Holding brake		
Min. release pressure	[bar]	3.8
Max. permissible test pressure	[bar]	8
Operating medium		Compressed air to ISO 8573-1:2010 [7:4:4]
Note on operating/ pilot medium		Operation with lubricated medium not possible
Ambient temperature[1)]	[°C]	–20 ... +80
Corrosion resistance class CRC[2)]		
[ ] Standard		1
[R3] High corrosion protection		3

1) Note operating range of proximity switches.
2) Corrosion resistance class CRC 1 to Festo standard FN 940070
Low corrosion stress. Dry internal application or transport and storage protection. Also applies to parts behind coverings, in the non-visible interior area, and parts which are covered in the application (e.g. drive trunnions).
Corrosion resistance class CRC 3 to Festo standard FN 940070
High corrosion stress. Outdoor exposure under moderate corrosive conditions. Externally visible parts with primarily functional surface requirements which are in direct contact with a normal industrial environment.

Data sheet

Safety characteristics	
Piston diameter	160
Conforms to standard	This product is based on ISO 15552 (previously also VDMA 24562, ISO 6431, NF E49 003.1, UNI 10290)
Safety function	Holding and stopping a movement
Performance Level (PL)	Stopping, holding, blocking a movement/category 1, Performance Level c
Certification	German Technical Control Board (TÜV)
Certificate issuing authority	German Technical Control Board (TÜV) CA 697
CE marking[1] (see declaration of conformity)	To EU Machinery Directive

1) For information about the area of use, see the EC declaration of conformity at: www.festo.com/sp → Certificates.
If the devices are subject to usage restrictions in residential, commercial or light-industrial environments, further measures for the reduction of the emitted interference may be necessary.

ATEX	
Piston diameter	160
ATEX category for gas	II 2G
Type of ignition protection for gas	Ex h IIC T4 Gb
ATEX category for dust	II 2D
Type of ignition protection for dust	Ex h IIIC T120°C Db
Explosion-proof ambient temperature [°C]	−20 ≤ Ta ≤ +60

Weight [g]	
Piston diameter	160
Basic weight with 0 mm stroke	49660
Additional weight per 10 mm stroke	208
Moving mass with 0 mm stroke	7085
Additional moving mass per 10 mm stroke	97

Forces [N]	
Piston diameter	160
Theoretical force at 6 bar, advancing	12064
Theoretical force at 6 bar, retracting	11310
Static holding force	17000

Note

The specified holding force refers to a static load. If this value is exceeded, slippage may occur. Dynamic forces occurring during operation must not exceed the static holding force if slippage is to be avoided. The holding brake is backlash-free in the clamped condition when varying loads are applied to the piston rod.

Lateral loads and bending moments on the piston rod can impair the function. (Make sure that the load on the piston rod is only in the direction of movement.)

Actuation:
The holding brake may only be released when the forces on the piston rod have reached equilibrium. Otherwise there is a risk of accidents due to the sudden movement of the piston rod. Blocking off the compressed air supply at both ends (e.g. with a 5/3-way valve) does not provide any safety.

Data sheet

Load mass m as a function of piston speed v_0

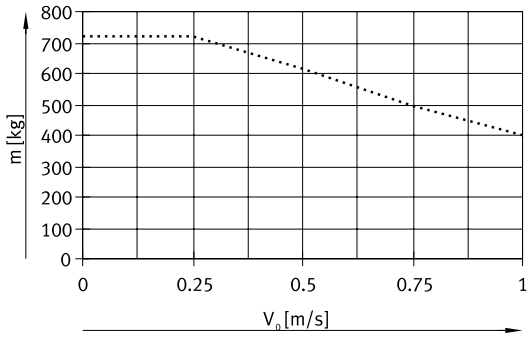

DFLG-160

Stopping distance sk_0 as a function of piston speed v_0

Ø 160

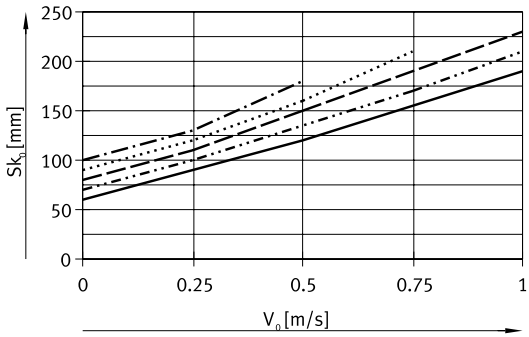

700 kg
600 kg
500 kg
400 kg
300 kg

Note

All data in the graphs is intended exclusively for the purposes of preselection when configuring the emergency braking function and must be checked mathematically and in practice prior to commissioning. Additional information is available at www.festo.com/sp ➔ User documentation.

Data sheet

Materials

Sectional view

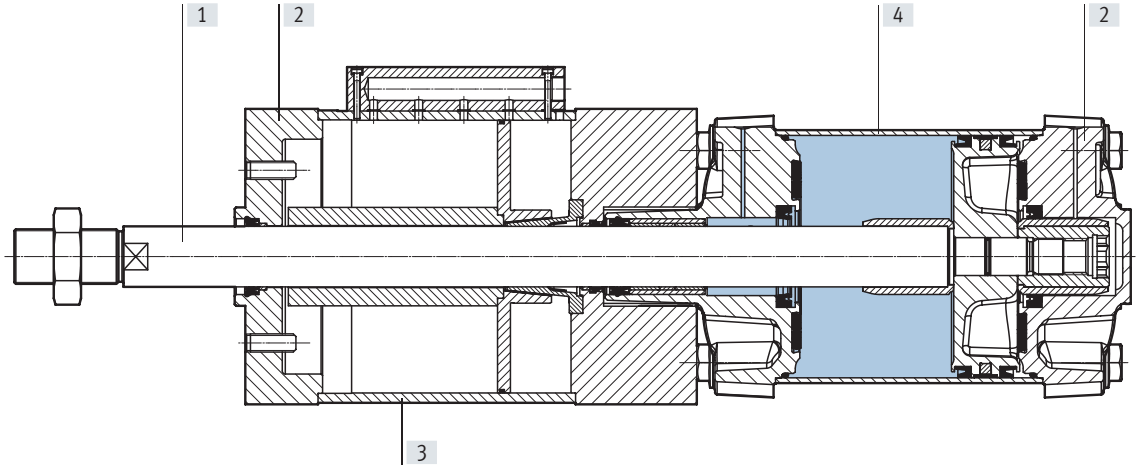

Cylinder with holding brake		
[1]	Piston rod	Hard-chrome-plated steel
[2]	Cover	Die-cast aluminium
		Wrought aluminium alloy
[3]	Housing	Steel
[4]	Cylinder barrel	Smooth-anodised wrought aluminium alloy
–	Seals	NBR
		TPE-U(PU)
–	Note on materials	RoHS-compliant

Data sheet

Dimensions Download CAD data ➔ www.festo.com

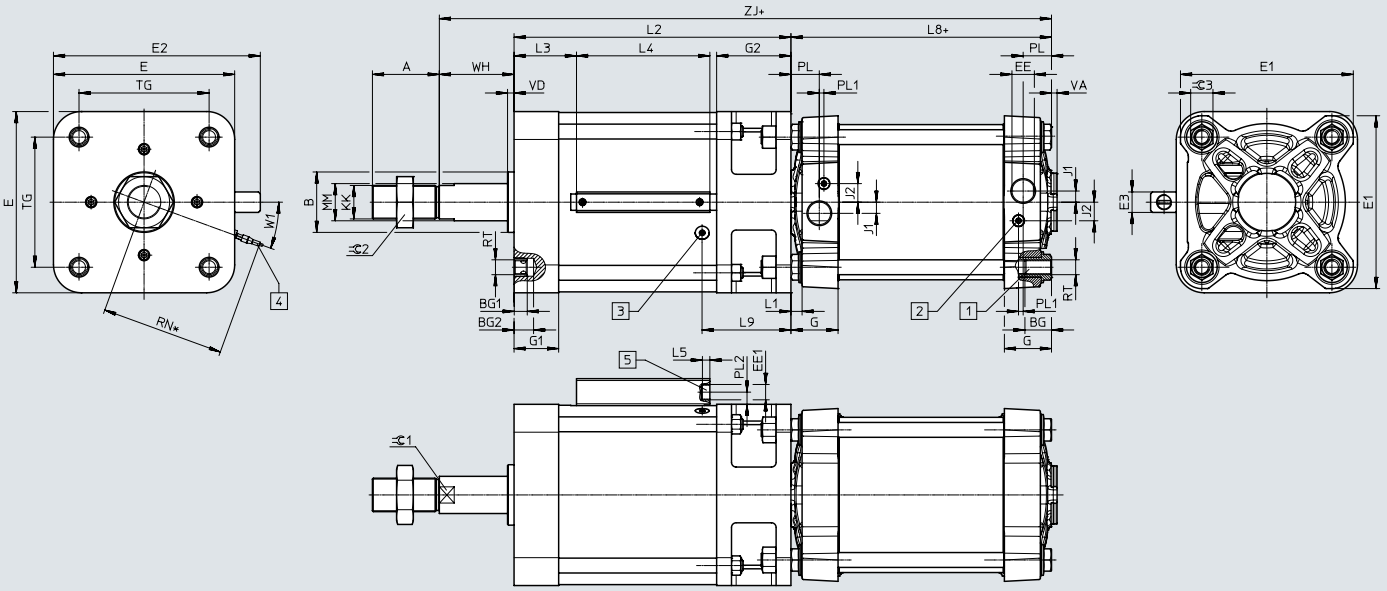

[1] Socket head screw with female thread for mounting components
[2] Adjusting screw for adjustable end-position cushioning
[3] Position for proximity switch (thread M6x0.75)
[4] Sensor kit DADG-D-F8
[5] Connection to release clamping function

+ = plus stroke length
* = installation space for sensor kit DADG-D-F8

ø [mm]	A -0.5	B ø d11	BG min.	BG1	BG2	E ±0.8	E1 ±0.9	E2 ±1	E3	EE
160	72	65	24	14	21	195	186	222.6	22	G3/4

ø [mm]	EE1	G	G1	G2	J1	J2	KK	L1	L2 ±1	L3
160	G3/8	50.7	48	80	12	20	M36x2	12	298	67.2

ø [mm]	L4	L5	L8+ ±1	L9	MM ø	PL	PL1	PL2	R	RN
160	143.5	8	180	95.5	40	31	5	13.1	R30	155

ø [mm]	RT	TG ±1.1	VA -1	VD ±0.2	W1	WH +2.3/-2.3	ZJ+ +2.3/-2.3	⌯1	⌯2	⌯3
160	M16	140	6	7	20°	80	558	36	55	24

Ordering data – Modular product system

Ordering table

Size		160	Conditions	Code		Enter code
Module no.		8073334				
Function		Cylinder with holding brake, double-acting		**DFLG**		DFLG
Piston diameter	[mm]	160		**–160**		–160
Stroke	[mm]	10 ... 2000		**–...**		
Cushioning		Pneumatic cushioning, adjustable at both ends		**–PPV**		–PPV
Position sensing		Via proximity switch		**A**		A
Corrosion protection		Standard				
		High corrosion protection		**–R3**		
EU certification		None				
		II 2GD		**–EX4**		
Certification		Safety device to Machinery Directive 2006/42/EC		**–S**		–S

Accessories

Foot mounting HNC/CRHNC
for DFLC

Material:
HNC: galvanised steel
CRHNC: high-alloy steel
Free of copper and PTFE

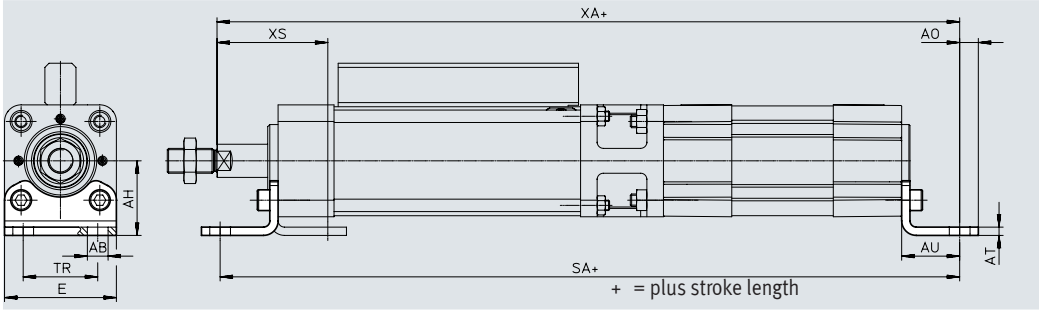

Dimensions and ordering data

For diam. [mm]	AB ⌀	AH	AO	AT	AU	E	SA	TR	XA	XS
40	10	36	9	4	28	54	347	36	347.7	56.7
63	10	50	12.5	5	32	75	395	50	398.9	67.9
100	14.5	71	17.5	6	41	110	475	75	483.3	90.3

For diam.	Basic type				Corrosion-resistant			
[mm]	CRC[1]	Weight [g]	Part no.	Type[2]	CRC[1]	Weight [g]	Part no.	Type[2]
40	2	193	**174370**	**HNC-40**	4	188	**176938**	**CRHNC-40**
63	2	436	**174372**	**HNC-63**	4	424	**176940**	**CRHNC-63**
100	2	1009	**174374**	**HNC-100**	4	990	**176942**	**CRHNC-100**

1) Corrosion resistance class CRC 2 to Festo standard FN 940070
Moderate corrosion stress. Indoor applications in which condensation can occur. External visible parts with primarily decorative surface requirements which are in direct contact with a normal industrial environment.
Corrosion resistance class CRC 4 to Festo standard FN 940070
Particularly high corrosion stress. Outdoor exposure under extreme corrosive conditions. Parts exposed to aggressive media, e.g. in the chemical or food industries. Such applications may need to be safeguarded by special tests (→ also FN 940082), using appropriate media.
2) Suitable for ATEX

Foot mounting HNG
for DFLG

Material:
Galvanised steel
Free of copper and PTFE

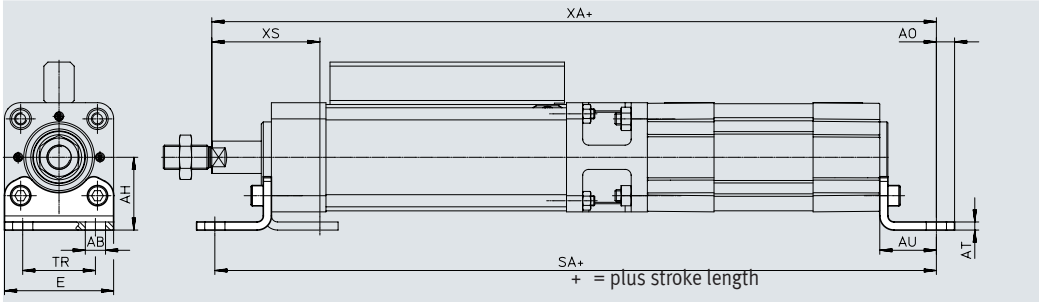

Dimensions and ordering data

For diam. [mm]	AB ⌀	AH	AO	AT	AU	E	SA	TR	XA	XS	CRC[1]	Weight [g]	Part no.	Type[2]
160	18.5	115	20	10	60	169	598	115	618	140	2	3931	**34476**	**HNG-160**

1) Corrosion resistance class CRC 2 to Festo standard FN 940070
Moderate corrosion stress. Indoor applications in which condensation can occur. External visible parts with primarily decorative surface requirements which are in direct contact with a normal industrial environment.
2) Suitable for ATEX

Accessories

Flange mounting FNC/CRFNG
for DFLC

Suitable for
emergency stop applications/
dynamic braking

Material:
FNC: galvanised steel
CRFNG: high-alloy steel
Free of copper and PTFE
RoHS-compliant

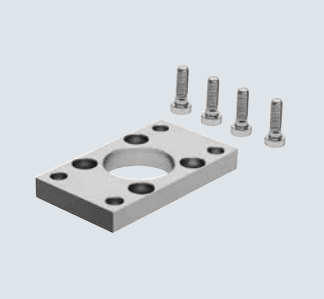

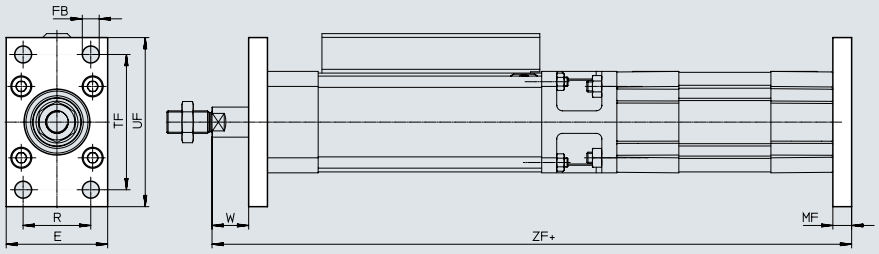

+ = plus stroke length

Dimensions and ordering data

For diam. [mm]	E	FB ø H13	MF	R	TF	UF	W	ZF
40	54	9	10	36	72	90	18.7	329.7
63	75	9	12	50	100	120	23.9	378.9
100	110	14	16	75	150	175	33.3	458.3

For diam. [mm]	Basic type				Corrosion-resistant			
	CRC[1]	Weight [g]	Part no.	Type[2]	CRC[1]	Weight [g]	Part no.	Type[2]
40	1	291	**174377**	**FNC-40**	4	291	**161847**	**CRFNG-40**
63	1	679	**174379**	**FNC-63**	4	680	**161849**	**CRFNG-63**
100	1	2041	**174381**	**FNC-100**	4	2054	**161851**	**CRFNG-100**

1) Corrosion resistance class CRC 1 to Festo standard FN 940070
Low corrosion stress. Dry internal application or transport and storage protection. Also applies to parts behind coverings, in the non-visible interior area, and parts which are covered in the application (e.g. drive trunnions).
Corrosion resistance class CRC 4 to Festo standard FN 940070
Particularly high corrosion stress. Outdoor exposure under extreme corrosive conditions. Parts exposed to aggressive media, e.g. in the chemical or food industries. Such applications may need to be safeguarded by special tests (→ also FN 940082), using appropriate media.
2) Suitable for ATEX

Accessories

Flange mounting FNG
for DFLG

Suitable for
emergency stop applications/
dynamic braking

Material:
Painted spheroidal graphite cast iron
Free of copper and PTFE
RoHS-compliant

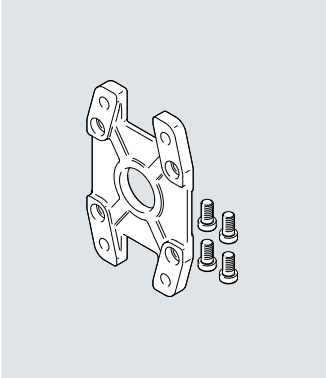

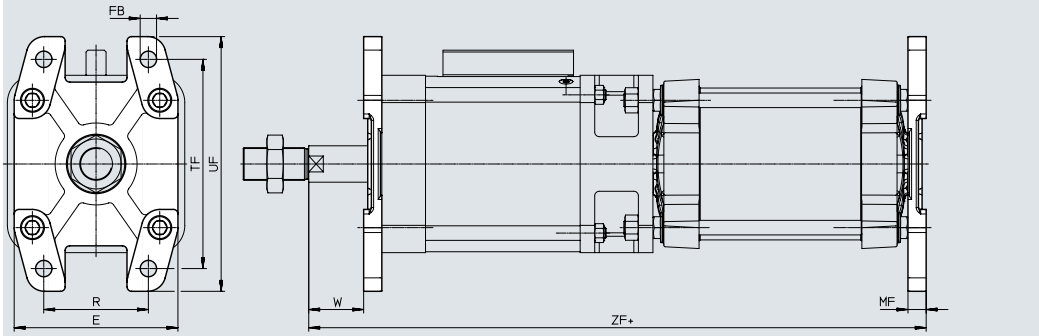

+ = plus stroke length

Dimensions and ordering data

For diam. [mm]	E	FB ⌀ H13	MF	R	TF	UF	W	ZF	CRC[1]	Weight [g]	Part no.	Type[2]
160	180	18	20	115	230	280	60	578	1	3550	**34478**	**FNG-160**

1) Corrosion resistance class CRC 1 to Festo standard FN 940070
Low corrosion stress. Dry internal application or transport and storage protection. Also applies to parts behind coverings, in the non-visible interior area, and parts which are covered in the application (e.g. drive trunnions).
2) Suitable for ATEX

Accessories

Swivel flange SNC
for DFLC

Material:
Die-cast aluminium
Free of copper and PTFE
RoHS-compliant

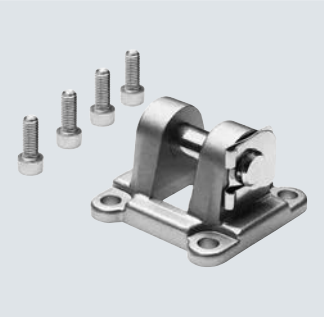

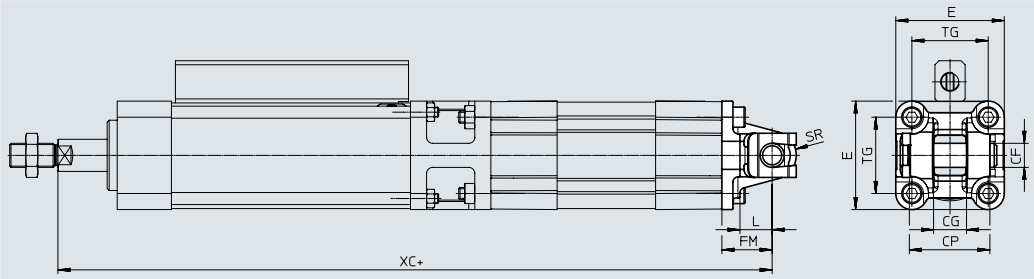

+ = plus stroke length

Dimensions and ordering data

For diam. [mm]	CF ø E7/h9	CG H14	CP h14	E	FM ±0.2	L	SR
40	12	16	40	$54_{-0.5}$	25	16	12
63	16	21	51	$75_{-0.6}$	32	21	16
100	20	25	75	$110_{+0.3/-0.8}$	41	27	20

For diam. [mm]	TG	XC	CRC[1)]	Weight [g]	Part no.	Type[2)]
40	38	344.7	1	140	**174384**	**SNC-40**
63	56.5	398.9	1	331	**174386**	**SNC-63**
100	89	483.3	1	865	**174388**	**SNC-100**

1) Corrosion resistance class CRC 1 to Festo standard FN 940070
Low corrosion stress. Dry internal application or transport and storage protection. Also applies to parts behind coverings, in the non-visible interior area, and parts which are covered in the application (e.g. drive trunnions).
2) Suitable for ATEX

Accessories

Swivel flange
SNCS/SNCS-...-R3
for DFLC

Material:
SNCS 40: die-cast aluminium
SNCS 63 ... 100:
Wrought aluminium alloy
SNCS-...-R3 100:
Wrought aluminium alloy with protective coating
RoHS-compliant

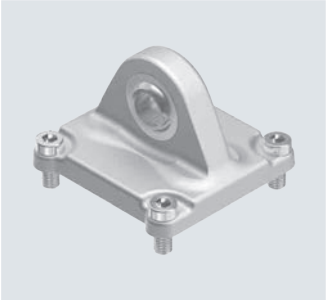

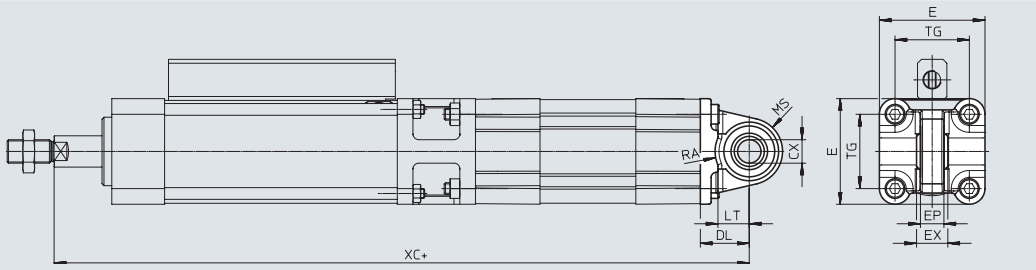

+ = plus stroke length

Dimensions and ordering data

For diam. [mm]	CX	CX [CRSNCS]	CX [SNCS-...-R3]	DL ±0.2	E	E [CRSNCS]	E [SNCS-...-R3]	EP ±0.2
40	$12_{+0.015}$	$12_{+0.018/-0.04}$	–	25	$54_{-0.5}$	$54_{-0.5}$	–	12
63	$16_{+0.015}$	$16_{+0.018/-0.14}$	–	32	$74.5_{\pm0.5}$	$75_{-0.6}$	–	15
100	$20_{+0.018}$	–	$20_{+0.021/-0.04}$	41	$109_{+1/-0.7}$	–	$109_{+1/-0.7}$	18

Dimensions and ordering data

For diam. [mm]	EX	LT	MS	MS [CRSNCS]	MS [SNCS-...-R3]	RA +1	RA [CRSNCS] +1	RA [SNCS-...-R3] +1	TG	XC
40	16	16	$17_{+0.5}$	$17_{+0.5}$	–	17.5	17.5	–	38	344.7
63	21	21	$23_{-0.5}$	$22_{+0.5}$	–	23	23	–	56.5	398.9
100	25	27	$30_{\pm0.5}$	–	$30_{\pm0.5}$	95	–	100	89	483.3

For diam. [mm]	Basic type CRC[1)]	Basic type Weight [g]	Basic type Part no.	Basic type Type	High corrosion protection CRC[1)]	High corrosion protection Weight [g]	High corrosion protection Part no.	High corrosion protection Type
40	1	122	**174398**	**SNCS-40**	4	239	**2895921**	**CRSNCS-40**
63	2	281	**174400**	**SNCS-63**	4	576	**2895923**	**CRSNCS-63**
100	2	683	**174402**	**SNCS-100**	3	684	**2895925**	**SNCS-100-R3**

1) Corrosion resistance class CRC 1 to Festo standard FN 940070
Low corrosion stress. Dry internal application or transport and storage protection. Also applies to parts behind coverings, in the non-visible interior area, and parts which are covered in the application (e.g. drive trunnions).
Corrosion resistance class CRC 2 to Festo standard FN 940070
Moderate corrosion stress. Indoor applications in which condensation can occur. External visible parts with primarily decorative surface requirements which are in direct contact with a normal industrial environment.
Corrosion resistance class CRC 3 to Festo standard FN 940070
High corrosion stress. Outdoor exposure under moderate corrosive conditions. Externally visible parts with primarily functional surface requirements which are in direct contact with a normal industrial environment.
Corrosion resistance class CRC 4 to Festo standard FN 940070
Particularly high corrosion stress. Outdoor exposure under extreme corrosive conditions. Parts exposed to aggressive media, e.g. in the chemical or food industries. Such applications may need to be safeguarded by special tests (→ also FN 940082), using appropriate media.

Accessories

Swivel flange SNCL
for DFLC

Material:
Die-cast aluminium
Free of copper and PTFE
RoHS-compliant

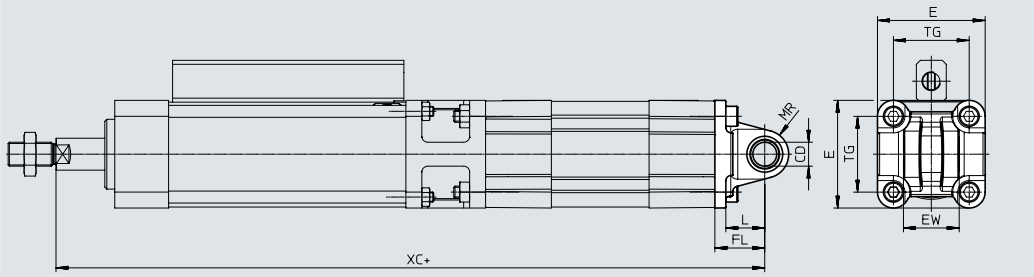

+ = plus stroke length

Dimensions and ordering data

For diam. [mm]	CD ⌀ H10	E	EW -0.2 -0.6	FL ±0.2	L	MR
40	12	$54_{-0.5}$	28	25	16	12
63	16	$75_{-0.6}$	40	32	21	16
100	60	41	27	20	89	483.3

For diam. [mm]	TG	XC	CRC[1)]	Weight [g]	Part no.	Type
40	38	344.7	1	95	**174405**	**SNCL-40**
63	56.5	398.9	1	225	**174407**	**SNCL-63**
100	89	483.3	1	606	**174409**	**SNCL-100**

1) Corrosion resistance class CRC 1 to Festo standard FN 940070
Low corrosion stress. Dry internal application or transport and storage protection. Also applies to parts behind coverings, in the non-visible interior area, and parts which are covered in the application (e.g. drive trunnions).

Accessories

Swivel flange
SNCB/SNCB-...-R3
for DFLC

Material:
SNCB: die-cast aluminium
SNCB-...-R3: die-cast aluminium with protective coating
Free of copper and PTFE
RoHS-compliant

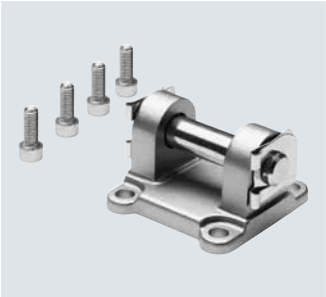

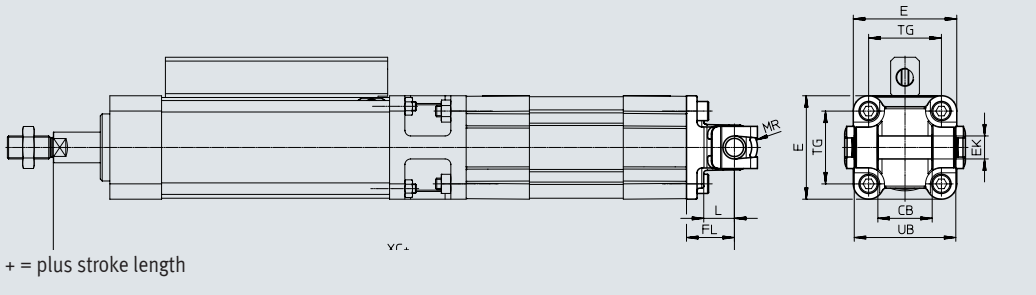

Dimensions and ordering data

For diam. [mm]	CB H14	E	EK ⌀ H10/e8	FL ±0.2	L	MR −0.5	TG	UB h14	XC
40	28	$54_{-0.5}$	12	25	16	12	38	52	344.7
63	40	$75_{-0.6}$	16	32	21	16	56.5	70	398.9
100	60	$110_{+0.3/-0.8}$	20	41	27	20	89	110	483.3

For diam.	Basic type				R3 – High corrosion protection			
[mm]	CRC[1)]	Weight [g]	Part no.	Type	CRC[1)]	Weight [g]	Part no.	Type
40	1	155	**174391**	**SNCB-40**	3	151	**176945**	**SNCB-40-R3**
63	1	375	**174393**	**SNCB-63**	3	371	**176947**	**SNCB-63-R3**
100	1	1035	**174395**	**SNCB-100**	3	986	**176949**	**SNCB-100-R3**

1) Corrosion resistance class CRC 1 to Festo standard FN 940070
Low corrosion stress. Dry internal application or transport and storage protection. Also applies to parts behind coverings, in the non-visible interior area, and parts which are covered in the application (e.g. drive trunnions).
Corrosion resistance class CRC 3 to Festo standard FN 940070
High corrosion stress. Outdoor exposure under moderate corrosive conditions. Externally visible parts with primarily functional surface requirements which are in direct contact with a normal industrial environment.

Accessories

Swivel flange SNG
for DFLG

Material:
Die-cast aluminium
Free of copper and PTFE
RoHS-compliant

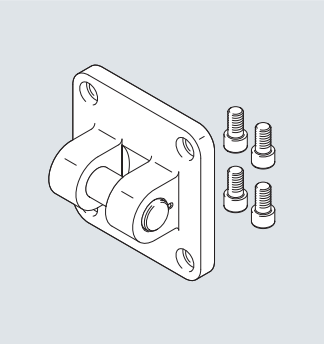

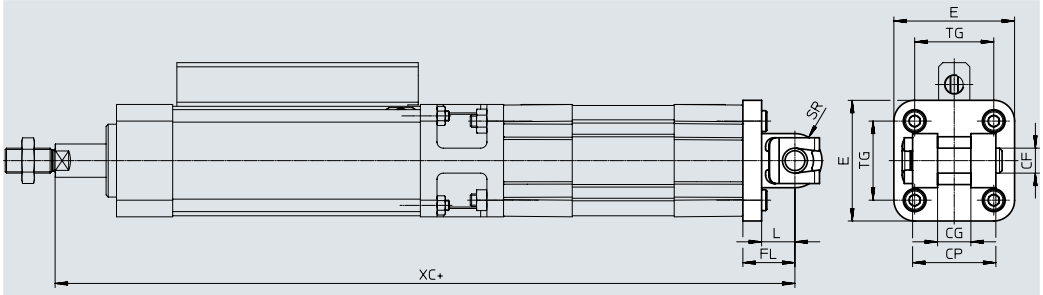

+ = plus stroke length

Dimensions and ordering data

For diam. [mm]	CF F7/h9	CG H14	CP d12	E max.	FL ±0.2	L	SR max.	TG	XC	CRC[1]	Weight [g]	Part no.	Type
160	35	43	122	186	55	35	32	$140_{\pm 0.3}$	613	2	3577	**152597**	**SNG-160**

1) Corrosion resistance class CRC 2 to Festo standard FN 940070
Moderate corrosion stress. Indoor applications in which condensation can occur. External visible parts with primarily decorative surface requirements which are in direct contact with a normal industrial environment.

Swivel flange SNGL
for DFLG

Material:
Die-cast aluminium
Free of copper and PTFE

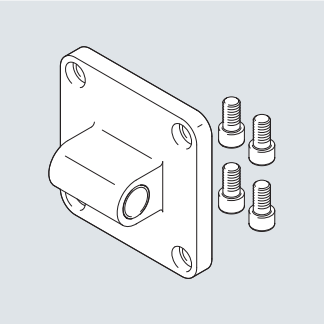

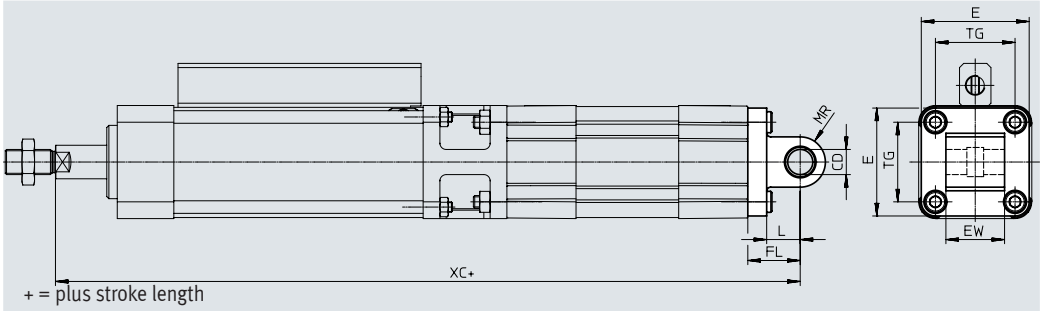

+ = plus stroke length

Dimensions and ordering data

For diam. [mm]	CD ø H9	EW	E ±0.5	FL ±0.2	L	MR	TG	XC	CRC[1]	Weight [g]	Part no.	Type
160	30	$90_{-0.5/-1.2}$	179.5	55	35	25	140	613	2	2358	**151534**	**SNGL-160**

1) Corrosion resistance class CRC 2 to Festo standard FN 940070
Moderate corrosion stress. Indoor applications in which condensation can occur. External visible parts with primarily decorative surface requirements which are in direct contact with a normal industrial environment.

Accessories

Swivel flange SNGB
for DFLG

Material:
Die-cast aluminium
Free of copper and PTFE
RoHS-compliant

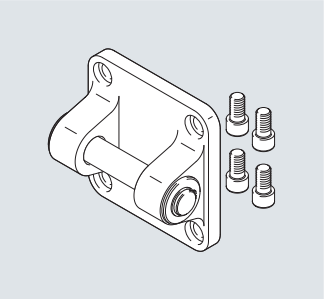

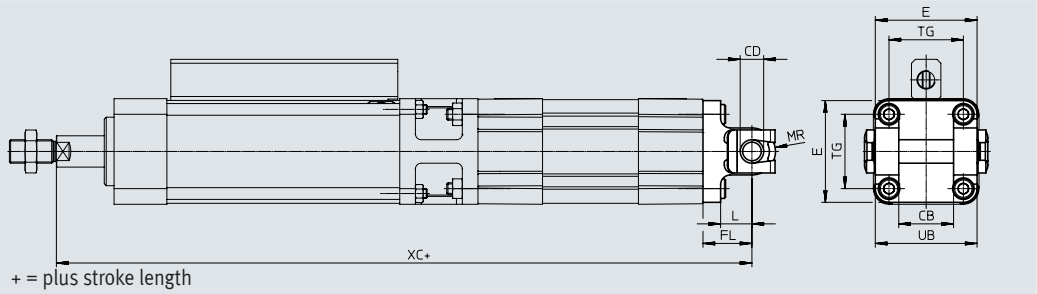

+ = plus stroke length

Dimensions and ordering data

For diam.	CB	CD	E	FL	L	MR	TG	UB	XC	CRC[1]	Weight	Part no.	Type
		⌀											
[mm]	H14	E10	±0.5	±0.2				h14			[g]		
160	90	30	179.5	55	35	25	$140_{\pm 0.3}$	170	613	2	3445	**34547**	**SNGB-160**

1) Corrosion resistance class CRC 2 to Festo standard FN 940070
Moderate corrosion stress. Indoor applications in which condensation can occur. External visible parts with primarily decorative surface requirements which are in direct contact with a normal industrial environment.

Accessories

Ordering data – Mounting attachments

Data sheets → Internet: clevis foot

Designation	For diam.	Part no.	Type
Clevis foot LN/LNG			
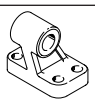	40	**33891**	**LNG-40**
	63	**33893**	**LNG-63**
	100	**33895**	**LNG-100**
	160	**9037**	**LN-160**
Clevis foot LSNG			
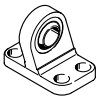	40	**31741**	**LSNG-40**
	63	**31743**	**LSNG-63**
	100	**31745**	**LSNG-100**
	160	**152599**	**LSNG-160**

Designation	For diam.	Part no.	Type
Clevis foot LBG[1] for DFLC			
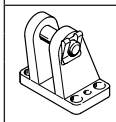	40	**31762**	**LBG-40**
	63	**31764**	**LBG-63**
	100	**31766**	**LBG-100**
Clevis foot LSN			
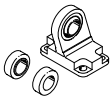	40	**5562**	**LSN-40**
	63	**5564**	**LSN-63**
	100	**5566**	**LSN-100**
	160	**6988**	**LSN-160**

1) Suitable for ATEX

Ordering data – Mounting components, corrosion-resistant

Data sheets → Internet: crlng

Designation	For diam.	Part no.	Type
Clevis foot CRLNG for DFLC			
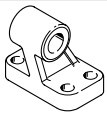	40	**161841**	**CRLNG-40**
	63	**161843**	**CRLNG-63**
	100	**161845**	**CRLNG-100**

Ordering data – Mounting components, high corrosion protection

Data sheets → Internet: lbg

Designation	For diam.	Part no.	Type[1]
Clevis foot LBG-R3 for DFLC			
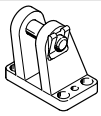	40	**2078792**	**LBG-40-R3**
	63	**2078795**	**LBG-63-R3**
	100	**2078799**	**LBG-100-R3**

1) Suitable for ATEX

Accessories

Ordering data – Piston rod attachments

Data sheets → Internet: piston rod attachment

Designation	For diam.	Part no.	Type
Rod eye SGS			
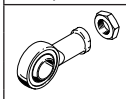	40	**9262**	**SGS-M12x1.25**
	63	**9263**	**SGS-M16x1.5**
	100	**9264**	**SGS-M20x1.5**
	160	**10775**	**SGS-M36x2**
Rod clevis SG[1]			
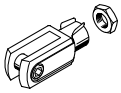	40	**6145**	**SG-M12x1.25**
	63	**6146**	**SG-M16x1.5**
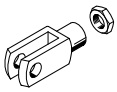	100	**6147**	**SG-M20x1.5**
	160	**9581**	**SG-M36x2**
Coupling piece KSG[1] for DFLC			
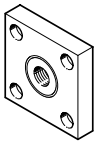	40	**32964**	**KSG-M12x1.25**
	63	**32965**	**KSG-M16x1.5**
	100	**32966**	**KSG-M20x1.5**

Designation	For diam.	Part no.	Type
Rod clevis SGA[1]			
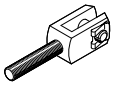	40	**10767**	**SGA-M12x1.25**
	63	**10768**	**SGA-M16x1.5**
	100	**10769**	**SGA-M20x1.5**
	160	**10771**	**SGA-M36x2**
Self-aligning rod coupler FK[1]			
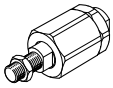	40	**6141**	**FK-M12x1.25**
	63	**6142**	**FK-M16x1.5**
	100	**6143**	**FK-M20x1.5**
	160	**10746**	**FK-M36x2**

1) Suitable for ATEX

Ordering data – Piston-rod attachments, corrosion-resistant

Data sheets → Internet: piston rod attachment

Designation	For diam.	Part no.	Type
Rod eye CRSGS for DFLC			
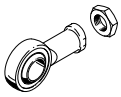	40	**195583**	**CRSGS-M12x1.25**
	63	**195584**	**CRSGS-M16x1.5**
	100	**195585**	**CRSGS-M20x1.5**
Self-aligning rod coupler CRFK[1] for DFLC			
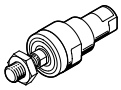	40	**2305779**	**CRFK-M12x1.25**
	63	**2490673**	**CRFK-M16x1.5**
	100	**2545677**	**CRFK-M20x1.5**

Designation	For diam.	Part no.	Type
Rod clevis CRSG[1] for DFLC			
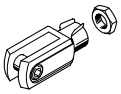	40	**13570**	**CRSG-M12x1.25**
	63	**13571**	**CRSG-M16x1.5**
	100	**13572**	**CRSG-M20x1.5**

1) Suitable for ATEX

Accessories

Proximity switches DADG

General technical data				
For diam.		40; 63	100	160
Size		M4		
Type of mounting		Screwed on		
Type of installation		Flush		
Housing material		Steel		
Cable sheath material		TPE-U(PUR)		
Note on materials		Contains paint-wetting impairment substances		
		RoHS-compliant		
Product weight	[g]	26	30	32
Conforms to standard		EN 60947-5-2		
Certification		RCM compliance mark		
		c UL us (OL)		
CE marking (see declaration of conformity)		To EU EMC Directive		
Degree of protection		IP67		

Operating and environmental conditions				
For diam.		40; 63	100	160
Switching output		PNP		
Switching element function		N/O contact		
Electrical connection 1, connection type		Cable		
Electrical connection 1, connection technology		Open end		
Electrical connection 1, number of pins/wires		3		
Cable length	[m]	2		
Operating voltage range DC	[V]	10 ... 30		
Max. switching frequency		5000 Hz		
Max. switching frequency DC		5000 Hz		
Max. output current	[mA]	100		
No-load supply current	[mA]	≤ 10		
Voltage drop	[V]	2		
Residual ripple	[%]	10		
Reverse polarity protection		For all electrical connections		
Short circuit current rating		Pulsed		
Rated operating distance	[mm]	0.6		
Assured operating distance	[mm]	0.64		
Reduction factors		Aluminium = 0.55		
		Stainless steel St 18/8 = 0.8		
		Copper = 0.5		
		Brass = 0.65		
		Steel St 37 = 1.0		
Repetition accuracy	[mm]	0.01		
Ambient temperature	[°C]	–25 ... +70		

Ordering data

Data sheets → Internet: dadg

	For diam.	Part no.	Type
	40; 63	**8072857**	**DADG-D-F8-16/20**
	100	**8072858**	**DADG-D-F8-25**
	160	**8072859**	**DADG-D-F8-40**

Accessories

Ordering data – Proximity switches for T-slot, magneto-resistive

Data sheets → Internet: smt

	Type of mounting	Switching output	Electrical connection	Cable length [m]	Part no.	Type
N/O contact						
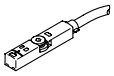	Insertable in the slot from above, flush with cylinder profile, short design	PNP	Cable, 3-wire	2.5	**574335**	**SMT-8M-A-PS-24V-E-2.5-OE**
			Plug M8x1, 3-pin	0.3	**574334**	**SMT-8M-A-PS-24V-E-0.3-M8D**
		NPN	Cable, 3-wire	2.5	**574338**	**SMT-8M-A-NS-24V-E-2.5-OE**
			Plug M8x1, 3-pin	0.3	**574339**	**SMT-8M-A-NS-24V-E-0.3-M8D**
		Non-contact-ing	Plug, 2-wire	5	**574341**	**SMT-8M-A-ZS-24V-E-5.0-OE-EX2**
N/C contact						
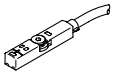	Insertable in the slot from above, flush with cylinder profile, short design	PNP	Cable, 3-wire	7.5	**574340**	**SMT-8M-A-PO-24V-E-7.5-OE**

Ordering data – Connecting cables

Data sheets → Internet: nebu

	Electrical connection, left	Electrical connection, right	Cable length [m]	Part no.	Type
	Straight socket, M8x1, 3-pin	Cable, open end, 3-wire	2.5	**541333**	**NEBU-M8G3-K-2.5-LE3**
			5	**541334**	**NEBU-M8G3-K-5-LE3**
	Angled socket, M8x1, 4-pin	Cable, open end, 3-wire	2.5	**541338**	**NEBU-M8W3-K-2.5-LE3**
			5	**541341**	**NEBU-M8W3-K-5-LE3**

Accessories

Position transmitter

The position transmitter continuously senses the position of the piston.
It has an analogue output with an output signal in proportion to the piston position.

Ordering data – Position transmitter for T-slot

Data sheets → Internet: sdat

	Position measuring range	Analogue output [mA]	Type of mounting	Electrical connection	Cable length [m]	Part no.	Type
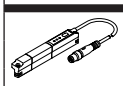	0 ... 50	4 ... 20	Insertable in the slot from above	Plug M8x1, 4-pin, in-line	0.3	**1531265**	**SDAT-MHS-M50-1L-SA-E-0.3-M8**
	0 ... 80					**1531266**	**SDAT-MHS-M80-1L-SA-E-0.3-M8**
	0 ... 100					**1531267**	**SDAT-MHS-M100-1L-SA-E-0.3-M8**
	0 ... 125					**1531268**	**SDAT-MHS-M125-1L-SA-E-0.3-M8**
	0 ... 160					**1531269**	**SDAT-MHS-M160-1L-SA-E-0.3-M8**

Ordering data – Sensor bracket for proximity switch SMT-8M and position transmitter SMAT-8M
for DFLG

Data sheets → Internet: dasp

	For diam.	Materials	Part no.	Type
	160	Rail: anodised wrought aluminium alloy Screws: high-alloy stainless steel	**1553813**	**DASP-M4-160-A**

Ordering data – Connecting cables

Data sheets → Internet: nebu

	Electrical connection, left	Electrical connection, right	Cable length [m]	Part no.	Type
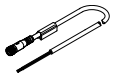	Straight socket, M8x1, 4-pin	Cable, open end, 4-wire	2.5	**541342**	**NEBU-M8G4-K-2.5-LE4**
			5	**541343**	**NEBU-M8G4-K-5-LE4**
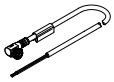	Angled socket, M8x1, 4-pin	Cable, open end, 4-wire	2.5	**541344**	**NEBU-M8W4-K-2.5-LE4**
			5	**541345**	**NEBU-M8W4-K-5-LE4**

Ordering data – One-way flow control valves

Data sheets → Internet: grla

	Connection		Material	Part no.	Type
	Thread	For tubing O.D.			
For exhaust air					
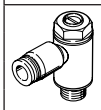	G1/8	4	Metal version	**193143**	**GRLA-1/8-QS-4-D**
		6		**193144**	**GRLA-1/8-QS-6-D**
		8		**193145**	**GRLA-1/8-QS-8-D**
	G1/4	6		**193146**	**GRLA-1/4-QS-6-D**
		8		**193147**	**GRLA-1/4-QS-8-D**
		10		**193148**	**GRLA-1/4QS-10-D**
	G3/8	6		**193149**	**GRLA-3/8-QS-6-D**
		8		**193150**	**GRLA-3/8-QS-8-D**
		10		**193151**	**GRLA-3/8-QS-10-D**
	G1/2	12		**193152**	**GRLA-1/2-QS-12-D**

Festo - Your Partner in Automation

1 Festo Inc.

5300 Explorer Drive
Mississauga, ON L4W 5G4
Canada

Festo Customer Interaction Center
Tel: 1 877 463 3786
Fax: 1 877 393 3786
Email: customer.service.ca@festo.com

2 Festo Pneumatic

Av. Ceylán 3,
Col. Tequesquináhuac
54020 Tlalnepantla,
Estado de México

Multinational Contact Center
01 800 337 8669

ventas.mexico@festo.com

3 Festo Corporation

1377 Motor Parkway
Suite 310
Islandia, NY 11749

4 Regional Service Center

7777 Columbia Road
Mason, OH 45040

Festo Customer Interaction Center
1 800 993 3786
1 800 963 3786
customer.service.us@festo.com

Connect with us

www.festo.com/socialmedia

www.festo.com

Subject to change