Mini slide units EGSS-BS

This product is also available as a modular mechanical system
Mini slide EGSC-BS

Key features

At a glance
Plug and work with the Simplified Motion Series

The simplicity of pneumatics is now combined for the first time with the advantages of electric automation thanks to the Simplified Motion Series.
These integrated drives are the perfect solution for all users who are looking for an electric alternative for very simple movement and positioning tasks between two mechanical end positions, but don't want the commissioning process for traditional electric drive systems that can often be quite complex.

IO-Link

There is no need for any software since operation is simply based on the "plug and work" principle. Digital I/O (DIO) and IO-Link are always automatically included – a product with two types of control as standard.

Integrated

The integrated electronics in the drive are at the core of the Simplified Motion Series.

Simple

For commissioning, simply set all relevant parameters directly on the drive:
- Speed and force
- Reference end position and cushioning
- Manual operation

Standardised

Electrical connection via M12 plug design
- Power (4-pin): power supply for the motor
- Logic (8-pin): control signal, sensor signal and power for the integrated electronics

Connected

Use of extended functions via IO-Link:
- Motion parameters can be set remotely
- Copy and backup function for transferring parameters
- Read function for extended process parameters

The functions of the Simplified Motion Series

Basic profile for movement between two end positions:
with speed control

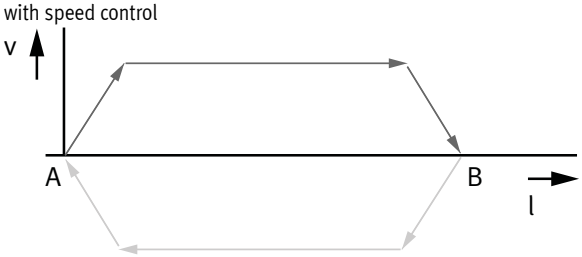

Extended motion profile for simplified press-fitting and clamping functions:
with speed and force control

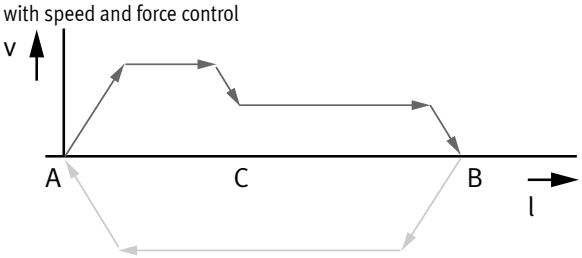

- These drives are designed for simple movements between two end positions.
- Proximity switches are required in order to implement any intermediate positions.

The products in the Simplified Motion Series

Spindle axis unit
ELGS-BS-KF

Mini slide unit
EGSS-BS-KF

Electric cylinder unit
EPCS

Toothed belt axis unit
ELGS-TB-KF

Toothed belt axis unit
ELGE

Rotary drive unit
ERMS

Key features

At a glance

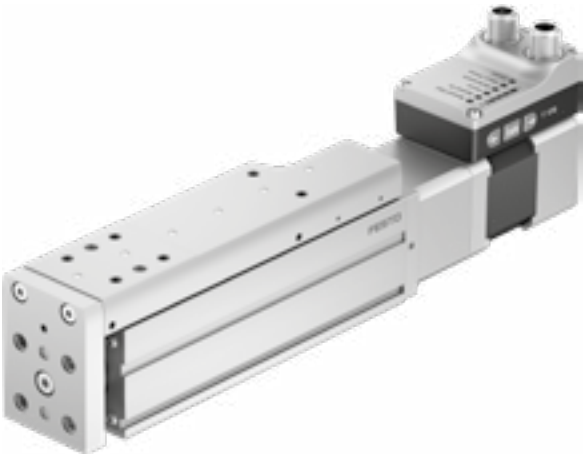

- Without external servo drive: all the necessary electronic components are combined in the integrated drive
- Two control options integrated as standard: digital I/O and IO-Link
- Complete solution for simple movements between two mechanical end positions
- Simplified commissioning: all parameters can be manually set directly on the drive
- No special expertise required for commissioning
- End position feedback similar to that of a conventional proximity switch is integrated as standard
- Very high-quality ball screw drive with minimal internal friction
- Rigid, high load-bearing and precise linear guide for absorbing lateral forces and for increased protection against rotation

Modular and flexible with motor, motor mounting kit and servo drive

This product is also available as a modular mechanical system as spindle axis EGSC-BS:

When to compact dimensions and optimised installation space are important, e.g. in assembly systems, test and inspection systems, small parts handling, the electronics industry and desktop applications. Either as an individual axis or as a handling system.

- Compact: optimum ratio of installation space to working space
- Unique: "one-size-down" mounting system
- Modular: individual combinations with motor, motor mounting kit and servo drive
- Flexible: wide range of mounting options for optimum machine integration

Typical handling systems

For applications where compact dimensions are essential, the axes ELGC can be combined into very space-saving handling systems that are suitable for assembly systems, test and inspection systems, small parts handling, the electronics industry and desktop applications. The very compact linear axes ELGC, mini slide EGSC and electric cylinder EPCC offer an optimal ratio between installation space and working space. They feature a common system approach and platform architecture and the connections are largely adapterless.

Cantilever system

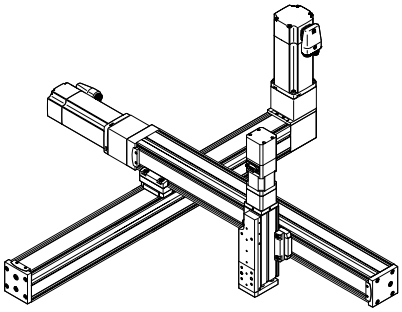

Planar surface gantry

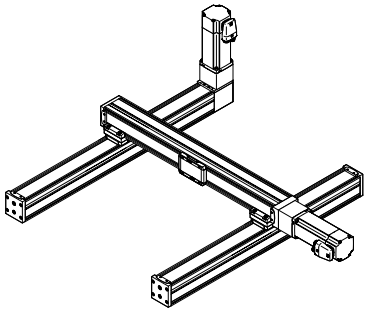

Three-dimensional gantry

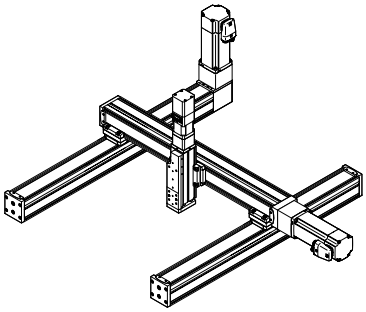

Key features

Matrix showing combinations between axis ELGC/ELGS-TB, ELGC/ELGS-BS, mini slide EGSC/EGSS-BS, electric cylinder EPCC/EPCS-BS and guide axis ELFC

Mounting options with profile mounting and via angle kit

		Assembly axis ELGC-BS/-TB; ELFC; EGSC-BS; EPCC-BS; ELGS-BS/-TB; EGSS-BS, EPCS-BS			
	Size	25	32	45	60
Base axis ELGC-BS/-TB; ELFC; ELGS-BS/-TB	32	■	–	–	–
	45	–	■	–	–
	60	–	–	■	–
	80	–	–	–	■

With profile mounting EAHF-L2-...-P-D...

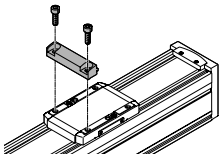

- Mounting option: base axis with one-size-down assembly axis

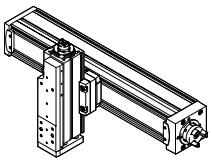

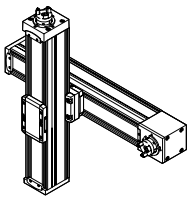

With angle kit EHAA-D-L2-...-AP

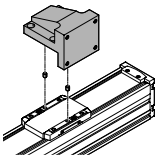

- Mounting option: base axis rotated through 90° with one-size-down assembly axis

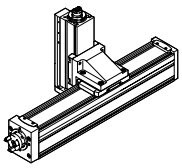

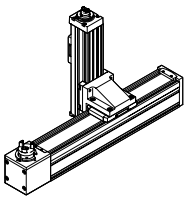

Matrix showing combinations between axis ELGC/ELGS-TB, ELGC/ELGS-BS, mini slide EGSC/EGSS-BS, electric cylinder EPCC/EPCS-BS and guide axis ELFC

Assembly options with adapter kit or direct mounting

		Assembly axis ELGC-BS/-TB; ELFC; EGSC-BS; EPCC-BS; ELGS-BS/-TB; EGSS-BS, EPCS-BS				
	Size	25	32	45	60	80
Base axis ELGC-BS/-TB; ELFC; ELGS-BS/-TB	32	■		–	–	–
	45	–	■		–	–
	60	–	–	■		–
	80	–	–	–	■	

		Assembly axis EGSC-BS; EGSS-BS			
	Size	25	32	45	60
Base axis EGSC-BS; EGSS-BS	25	■	–	–	–
	32	–	■	–	–
	45	–	–	■	–
	60	–	–	–	■

With adapter kit EHAA-D-L2

- Mounting option: base axis with the same size assembly axis
- Mounting option: base axis with height adjustment for one-size-down assembly axis
- When motors are mounted using parallel kits, this may lead to interfering contours. In this case, the adapter plate is required for height compensation

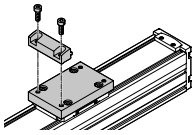

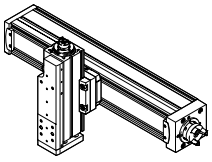

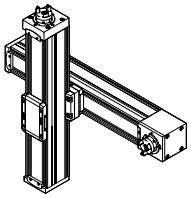

With direct mounting

- Mounting option: base axis with the same size assembly axis

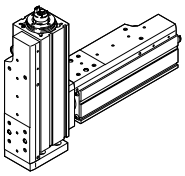

Type codes

001	Series	
EGSS	Electric slide drive	

002	Drive system	
BS	Ball screw drive	

003	Guide	
KF	Recirculating ball bearing guide	

004	Size	
32	32	
45	45	
60	60	

005	Stroke	
25	25	
50	50	
75	75	
100	100	
125	125	
150	150	
200	200	

006	Spindle pitch	
8P	8 mm	
10P	10 mm	
12P	12 mm	

007	Motor type	
ST	Stepper motor ST	

009	Controller	
M	Integrated	

010	Control panel	
H1	Integrated	

011	Bus protocol/activation	
PLK	PNP and IO-Link®	
NLK	NPN and IO-Link®	

013	End-position sensing	
AA	With integrated end-position sensing	

014	Cable outlet direction	
	Standard	
D	Underneath	
L	Left	
R	Right	

015	Electrical accessories	
	None	
L1	Adapter for operation as IO-Link® device	

016	Operating instructions	
	With operating instructions	
DN	No operating instructions	

Peripherals overview

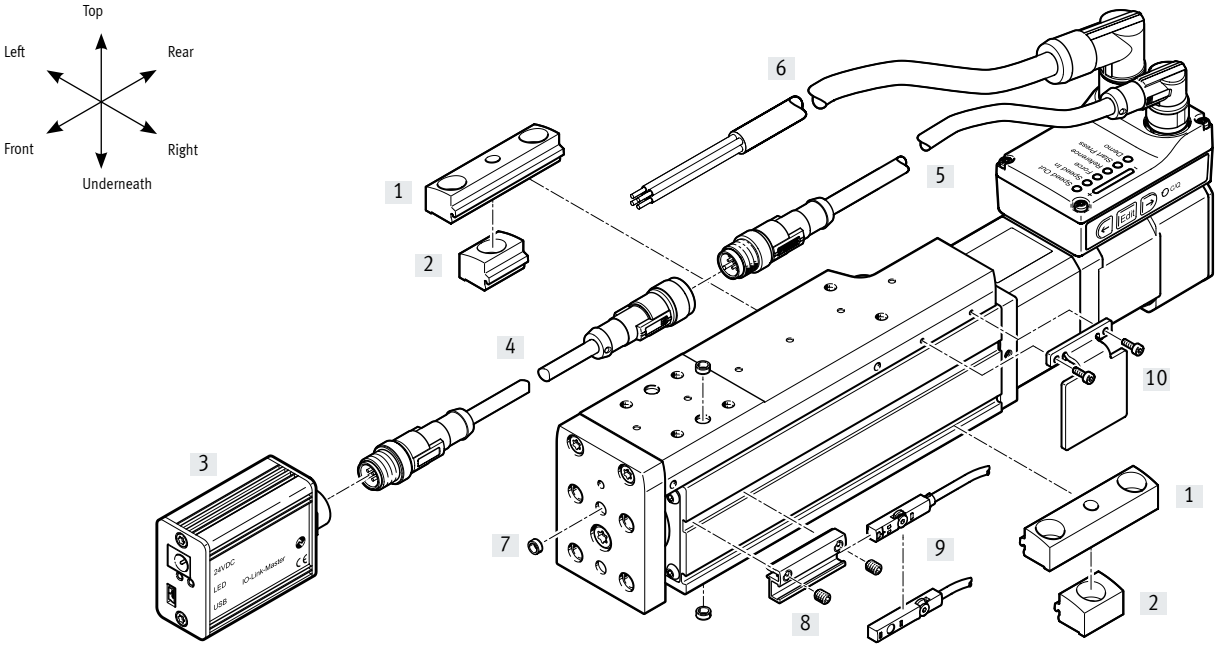

Motor attachment variants

Standard	[D] Underneath	[L] Left	[R] Right

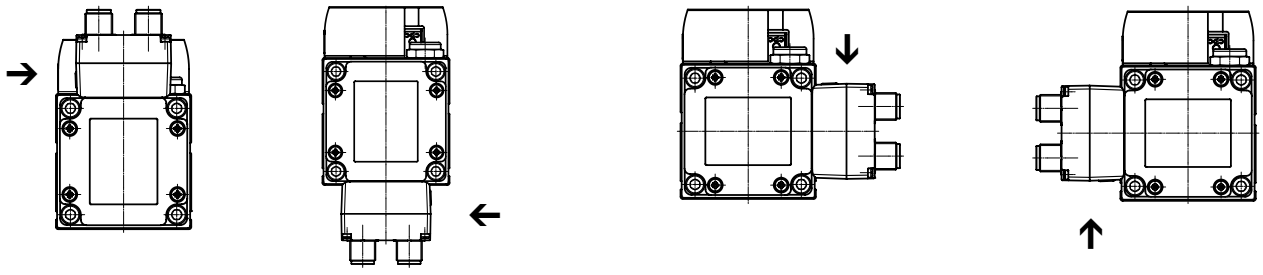

Control elements

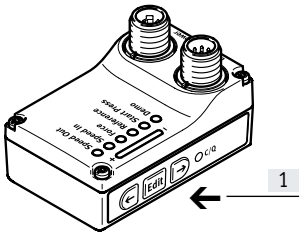

[1] Pushbutton actuators for parameterisation and control

Peripherals overview

Accessories			
	Type/order code	Description	→ Page/Internet
[1]	Profile mounting EAHF-L2-...-P	For mounting the axis on the side of the profile. The profile mounting can be attached to the mounting surface using the drill hole in the centre	22
[2]	Profile mounting EAHF-L2-...-P-S	For mounting the axis on the side of the profile	23
[3]	IO-Link master USB CDSU-1	For straightforward use of the mini slide unit via IO-Link	26
[4]	Adapter NEFC-M12G8	Connection between the motor and the and IO-Link master	26
[5]	Connecting cable NEBC-M12	For connection to a controller	27
[6]	Supply cable NEBL-T12	For connecting load and logic supply	26
[7]	Centring pin/sleeve ZBS, ZBH	For centring loads and attachments	25
[8]	Sensor bracket[1)] EAPM-L2	For mounting the proximity switches on the axis. The proximity switches can only be mounted using the sensor bracket	24
[9]	Proximity switch[1)] SIES-8M	Inductive proximity switch, for T-slot	25
	Proximity switch[1)] SMT-8M	Magnetic proximity switch, for T-slot	25
[10]	Switch lug[1)] EAPM-...-SLS	For sensing the slide position in conjunction with inductive proximity switches SIES-8M	24

1) Proximity switches are optional and only required in order to sense any intermediate positions.

Data sheet

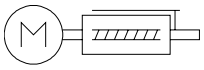

- Ø - Size
  32 ... 60
- l - Stroke length
  25 ... 200 mm

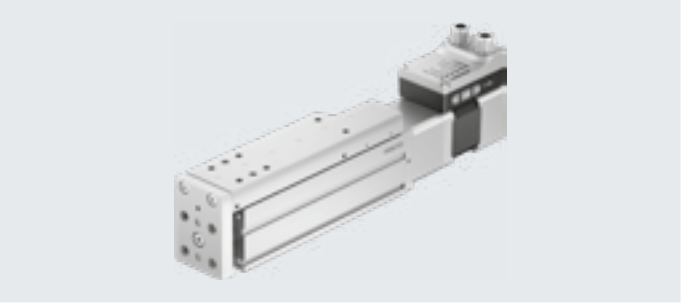

General technical data				
Size		32	45	60
Design		Electric mini slide with ball screw drive and integrated drive		
Motor type		Stepper motor		
Guide		Recirculating ball bearing guide		
Mounting position		Any		
Working stroke	[mm]	25, 50, 75, 100	25, 50, 75, 100, 125, 150	50, 75, 100, 125, 150, 200
Stroke reserve	[mm]	0		
Additional functions		Integrated end-position sensing		
		User interface		
Display		LED		
Homing		Positive fixed stop block		
		Negative fixed stop block		
Type of mounting		With female thread		
		With accessories		
		With centring pin, centring sleeve		
Max. line length				
Inputs/outputs	[m]	15		
IO-Link operation	[m]	20		

Mechanical data				
Size		32	45	60
Max. payload				
Horizontal	[kg]	2	6	10
Vertical	[kg]	2	6	10
Max. feed force F_x	[N]	60	120	250
Max. radial force[1)]	[N]	140	340	420
Max. speed	[m/s]	0.19	0.25	0.24
Speed press	[m/s]	0.01		
Max. acceleration	[m/s²]	5		
Repetition accuracy	[mm]	±0.015		
Reversing backlash	[µm]	150		
Position sensing		For proximity switch		
		Via IO-Link		

1) At the drive shaft

Data sheet

Spindle				
Size		32	45	60
Diameter	[mm]	8	10	12
Pitch	[mm/rev.]	8	10	12

Electrical data				
Size		32	45	60
Motor				
Nominal voltage DC	[V]	24 (±15%)		
Nominal current	[A]	3	3	5.3
Max. current consumption (load)	[A]	3	3	5.3
Max. current consumption (logic)	[mA]	300		
Encoder				
Rotor position encoder		Absolute encoder, single turn		
Rotor position encoder measuring principle		Magnetic		
Rotor position encoder resolution	[bit]	16		

Interfaces				
Size		32	45	60
Parameterisation interface				
IO-Link		Yes		
User interface		Yes		
Digital inputs				
Number		2		
Switching logic		PNP		
		NPN		
Properties		Not galvanically isolated		
		Configurable		
Specification		Based on IEC 61131-2, type 1		
Working area	[V]	24		
Digital outputs				
Number		2		
Switching logic		PNP		
		NPN		
Rotor position encoder		Absolute encoder, single turn		
Properties		Not galvanically isolated		
		Configurable		
Max. current	[mA]	100		

Data sheet

Technical data – IO-Link				
Size		32	45	60
SIO-mode support		Yes		
Communication mode		COM3 (230.4 kBaud)		
Connection technology		Plug		
Port class		A		
Number of ports		1		
Process data width OUT	[bytes]	2		
Process data content OUT	[bit]	1 (Move in)		
	[bit]	1 (Move out)		
	[bit]	1 (Quit Error)		
Process data width IN	[bytes]	2		
Process data content IN	[bit]	1 (State Device)		
	[bit]	1 (State Move)		
	[bit]	1 (State in)		
	[bit]	1 (State out)		
Service data contents IN	[bit]	32 (Force)		
	[bit]	32 (Position)		
	[bit]	32 (Speed)		
Minimum cycle time	[ms]	1		
Data memory required	[Kilobyte]	0.5		
Protocol version		Device V 1.1		

Operating and environmental conditions				
Size		32	45	60
Insulation class		B		
Ambient temperature	[°C]	0 ... +50		
Storage temperature	[°C]	–20 ... +60		
Note on ambient temperature		Above an ambient temperature of 30°C, the power must be reduced by 2% per K		
Relative humidity	[%]	0 ... 90		
Protection class		III		
Degree of protection		IP40		
Duty cycle	[%]	100		
CE marking		To EU EMC Directive		
		To EU RoHS Directive		
KC mark		KC-EMV		
Certification		RCM compliance mark		
Vibration resistance		Transport application check with severity level 1 to FN 942017-4 and EN 61800-2 and EN 61800-5-1		
Shock resistance		Shock test with severity level 1 to FN 942017-5 and EN 61800-2		
Maintenance interval		Life-time lubrication		

Weight				
Size		32	45	60
Basic weight with 0 mm stroke	[g]	924	1238	2735
Additional weight per 10 mm stroke	[g]	30	63	95
Moving mass at 0 mm stroke	[g]	149	212	675
Additional moving mass per 10 mm stroke	[g]	12	30	40

Data sheet

Materials

Sectional view

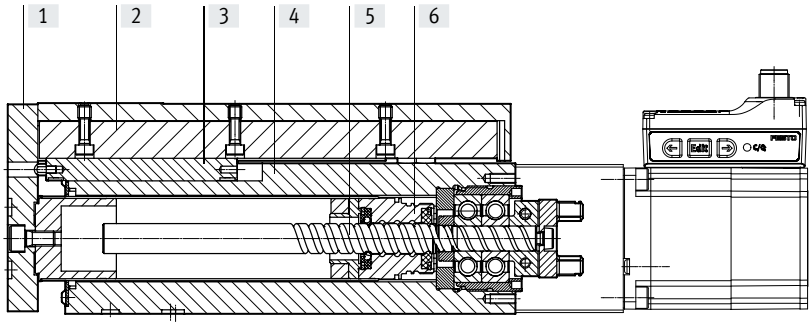

Axis		
[1]	Yoke plate	Anodised wrought aluminium alloy
[2]	Slide	Anodised wrought aluminium alloy
[3]	Guide rail	Rolled steel
[4]	Housing	Anodised wrought aluminium alloy
[5]	Spindle	Rolled steel
[6]	Spindle nut	Rolled steel
	Note on materials	RoHS-compliant
		Contains paint-wetting impairment substances

Pin allocation

Power supply

Plug
M12x1, 4-pin, T-coded to EN 61076-2-111

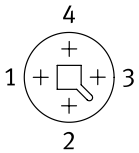

Pin	Function
1	Power supply (24 V DC)
2	Reference potential, power supply (GND)
3	Reserved, do not connect
4	Functional earth (FE)

Logic interface

Plug
M12x1, 8-pin, A-coded to EN 61076-2-101

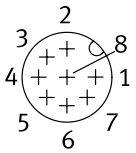

When used with digital I/O

Pin	Function
1	Logic power supply (24 V DC)
2	Digital output 1 (State "In")
3	Digital output 2 (State "Out")
4	Reference potential, logic power supply (GND)
5	Digital input 1 (Move "In")
6	Digital input 2 (Move "Out")
7	Reserved, do not connect
8	Reference potential, logic power supply (GND)

When used with I/O-Link

Pin	Function
1	L+ IO-Link power supply (24 V DC)
2	Reserved, do not connect
3	C/Q communication with the IO-Link master
4	L – Reference potential, IO-Link power supply (0 V)
5	Reserved, do not connect
6	Reserved, do not connect
7	Reserved, do not connect
8	L – Reference potential, IO-Link power supply (0 V)

Data sheet

Dynamic characteristic load values

The indicated forces and torques refer to the centre of the guide.
These values must not be exceeded during dynamic operation.

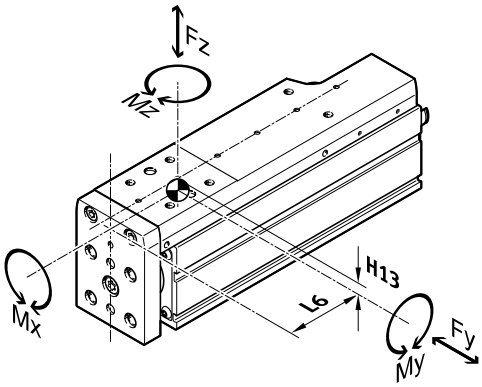

Distance from the centre of the guide				
Size		32	45	60
Dimension H13	[mm]	7.9	10.2	15.9
Dimension L6[1)]	[mm]	31.8	37.3	53.4

1) The dimension relates to the retracted position of the slide. In the advanced position, the dimension must be extended accordingly.

Max. permissible forces and torques for the bearing calculation, for a service life of 5 x 10^6 cycles and max. stroke				
Size		32	45	60
$Fy_{max.}$	[N]	991	1314	4937
$Fz_{max.}$	[N]	991	1314	4937
$Mx_{max.}$	[Nm]	3.4	8.1	20
$My_{max.}$	[Nm]	3.2	7	30
$Mz_{max.}$	[Nm]	3.2	7	30

Basic load ratings				
Size		32	45	60
Dynamic				
Ball screw drive	[N]	2000	3200	4600
Linear guide	[N]	2135	3240	13400
Fixed bearing	[N]	3795	7413	13321
Static				
Ball screw drive	[N]	3700	5900	8500
Linear guide	[N]	3880	5630	26900
Fixed bearing	[N]	1792	3966	7000

Note

For a guide system to have a service life of 5 x 10^6 cycles, the load comparison factor must have a value of fv ≤ 1, based on the maximum permissible forces and torques for a service life of 5 x 10^6 cycles.
This formula can be used to calculate a guide value.
The engineering software "PositioningDrives" is available for more precise calculations ➔ www.festo.com

If the axis is subjected to two or more of the indicated forces and torques simultaneously, the following equation must be satisfied in addition to the indicated maximum loads:

Calculating the load comparison factor:

$$f_v = \frac{|F_{y1}|}{F_{y2}} + \frac{|F_{z1}|}{F_{z2}} + \frac{|M_{x1}|}{M_{x2}} + \frac{|M_{y1}|}{M_{y2}} + \frac{|M_{z1}|}{M_{z2}} \leq 1$$

F_1/M_1 = dynamic value
F_2/M_2 = maximum value

Data sheet

Calculating the service life

The service life of the guide depends on the load. To be able to make a statement as to the service life of the guide, the graph below plots the load comparison factor fv against the service life.

These values are only theoretical. You must consult your local Festo contact for a load comparison factor fv greater than 1.

Load comparison factor fv as a function of service life l

Example:
A user wants to move an x kg load. Using the formula (→ page 12) gives a value of 1.5 for the load comparison factor fv. According to the graph, the guide has a service life of approx. 1.5x 10^6 cycles. Reducing the acceleration reduces the My and Mz values. A load comparison factor fv of 1 now gives a service life of 5 x 10^6 cycles.

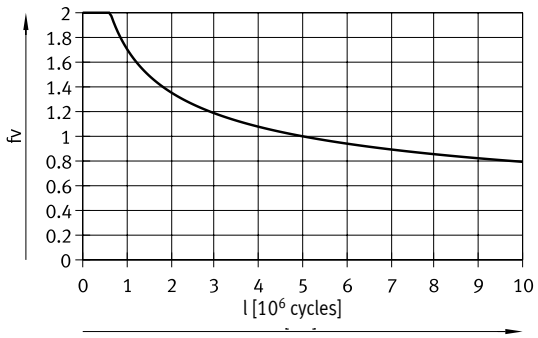

Comparison of the characteristic load values for 5 x 10^6 cycles with dynamic forces and torques of recirculating ball bearing guides

The characteristic load values of bearing guides are standardised to ISO and JIS using dynamic and static forces and torques. These forces and torques are based on an expected service life of the guide system of 100 km according to ISO or 50 km according to JIS.
As the characteristic load values are dependent on the service life, the maximum permissible forces and torques for a 5000 km service life cannot be compared with the dynamic forces and torques of bearing guides to ISO/JIS.

To make it easier to compare the guide capacity of mini slides EGSC with bearing guides, the table below lists the theoretically permissible forces and torques for a calculated service life of 100 km. This corresponds to the dynamic forces and torques to ISO.
These 100 km values have been calculated mathematically and are only to be used for comparing with dynamic forces and torques to ISO. The drives must not be loaded with these characteristic values as this could damage the axes.

Max. permissible forces and torques for a theoretical service life of 100 km (from a guide perspective only)
Application: mass m on the slide

Size		25	32	45	60
$Fy_{max.}$	[N]	1310	2135	3240	13400
$Fz_{max.}$	[N]	1310	2135	3240	13400
$Mx_{max.}$	[Nm]	5	10	20	107
$My_{max.}$	[Nm]	4	7	17	117
$Mz_{max.}$	[Nm]	4	7	17	117

Service life of the motor

The service life of the motor at nominal power is 20000 h.

Data sheet

Sizing example

Application data:

- Payload: 4 kg
- Mounting position: vertical
- Stroke: 100 mm
- Max. permitted positioning time: 1 s (one direction)

Step 1: Selection of the smallest possible size from the table ➔ page 8

Mechanical data				
Size		32	45	60
Max. payload				
Horizontal	[kg]	2	6	10
Vertical	[kg]	2	6	10

➔ Smallest possible size: EGSS-BS-KF-45

Step 2: Selection of max. speed level v for payload m

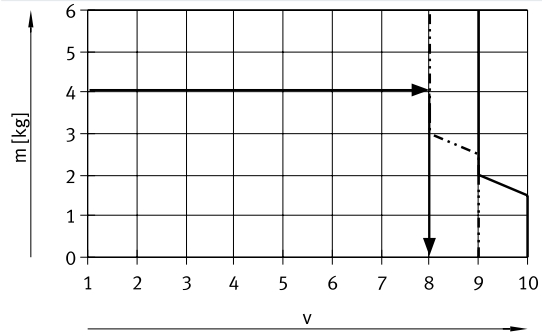

➔ Max. speed level for payload: level 8

Step 3: Reading off the min. positioning time t for stroke l

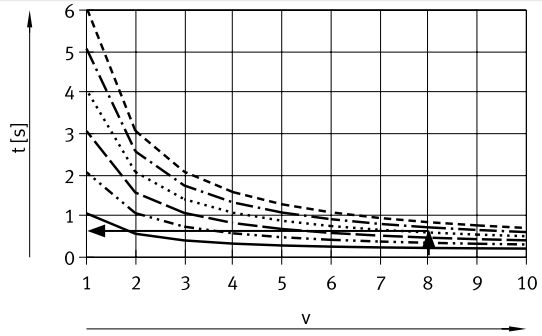

➔ Min. positioning time for 100 mm at level 8: 0.6 s

Result

The application can be implemented using EGSS-BS-KF-45-100. A minimum positioning time (one direction) of 0.6 s is achieved. Longer positioning times can be selected at any time using a lower speed level.

Mass m as a function of speed level v

Size 32

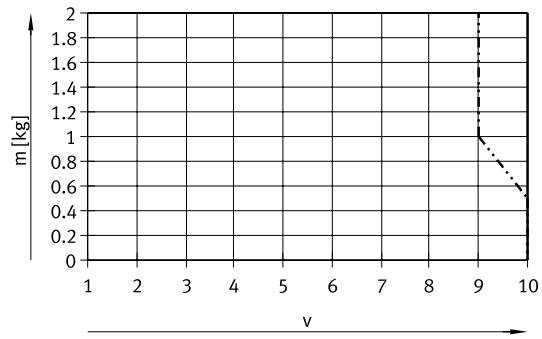

Size 45

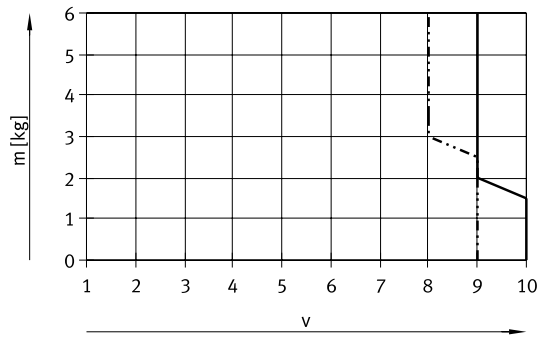

Horizontal
Vertical

Data sheet

Mass m as a function of speed level v

Size 60

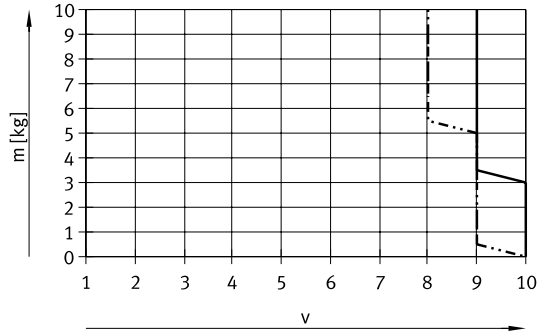

Note:
The lines represent the maximum values. The lower speed levels can be set at any time.

Horizontal
Vertical

Positioning time t as a function of speed level v and stroke l

Size 32

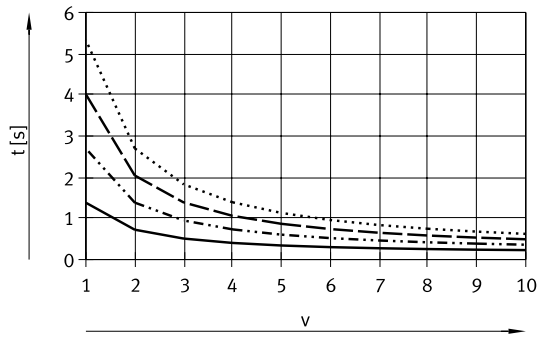

l = 25 mm
l = 50 mm
l = 75 mm
l = 100 mm

Size 45

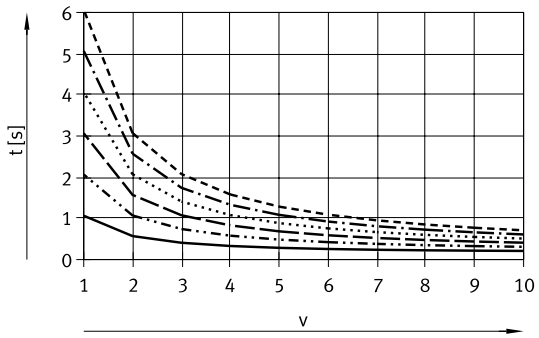

l = 25 mm
l = 50 mm
l = 75 mm
l = 100 mm
l = 125 mm
l = 150 mm

Size 60

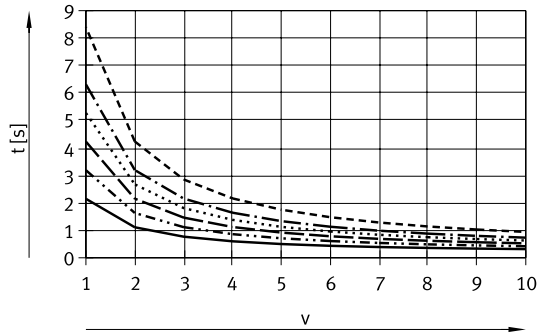

l = 50 mm
l = 75 mm
l = 100 mm
l = 125 mm
l = 150 mm
l = 200 mm

Data sheet

Feed force F as a function of force level F1

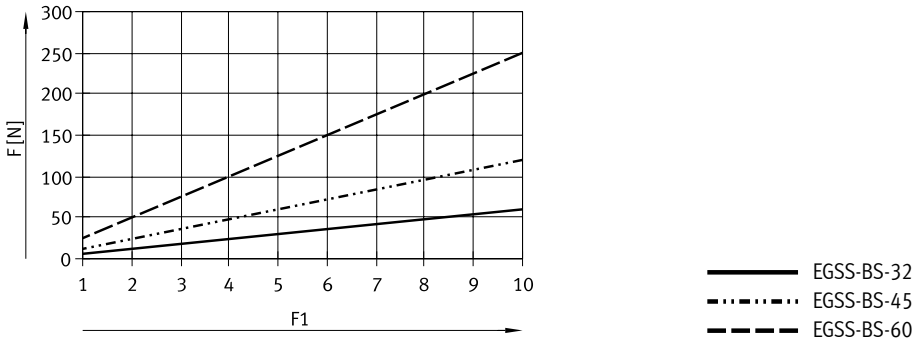

Feed force F as a function of service life l

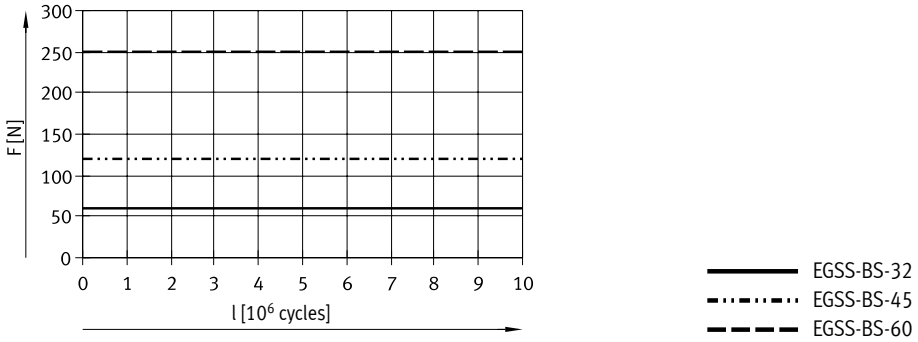

Deflection f of the guide rail as a function of stroke l

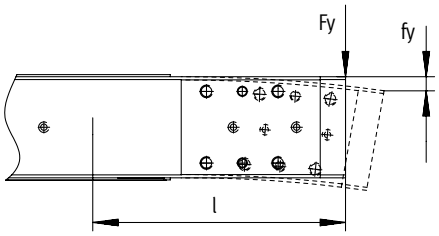

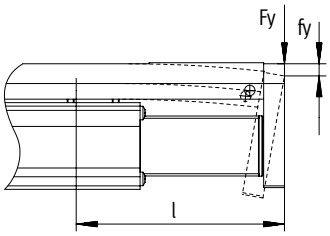

Fy/Fz at which the characteristic curves were determined

EGSS-BS-32: 10 N

EGSS-BS-45: 10 N

EGSS-BS-60: 10 N

Deflection fy

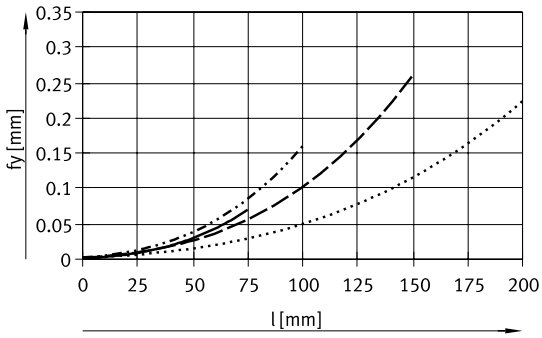

Deflection fz

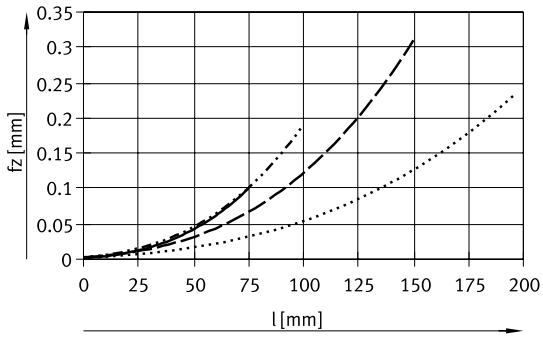

EGSS-BS-32
EGSS-BS-45
EGSS-BS-60

Data sheet

Dimensions – With motor

Download CAD data ➔ www.festo.com

Size 32/45/60

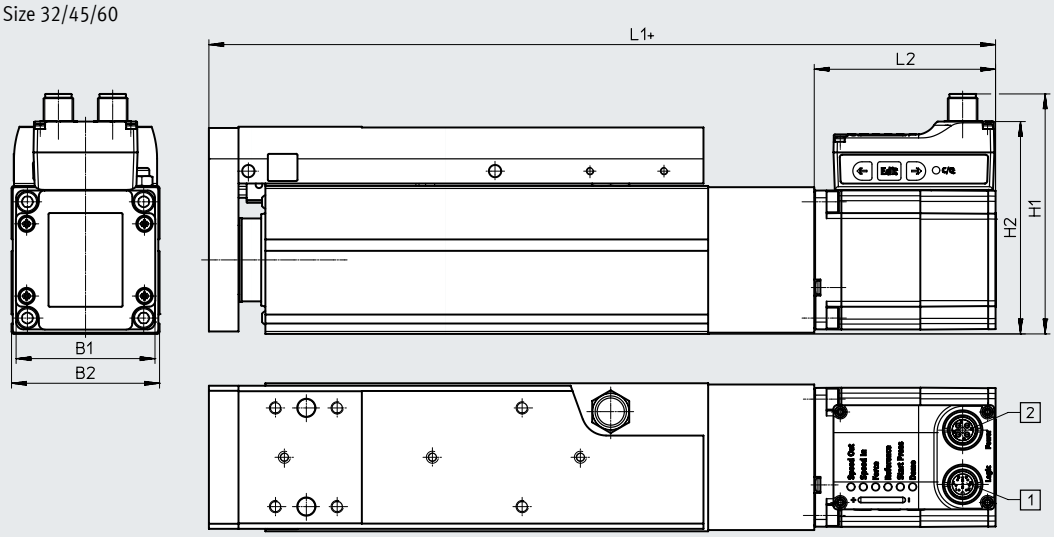

[1] Connection to logic interface
[2] Connection to power supply
+ = plus stroke length

Size	L1	L2	H1	H2	B1	B2
32	168.5	65	81.1	69.9	42.3	32
45	180.3	65	82.6	71.4	42.3	45
60	218.9	73.5	97.3	86.1	56.6	60

Data sheet

Dimensions – Mechanical system

Download CAD data ➔ www.festo.com

Size 32/45

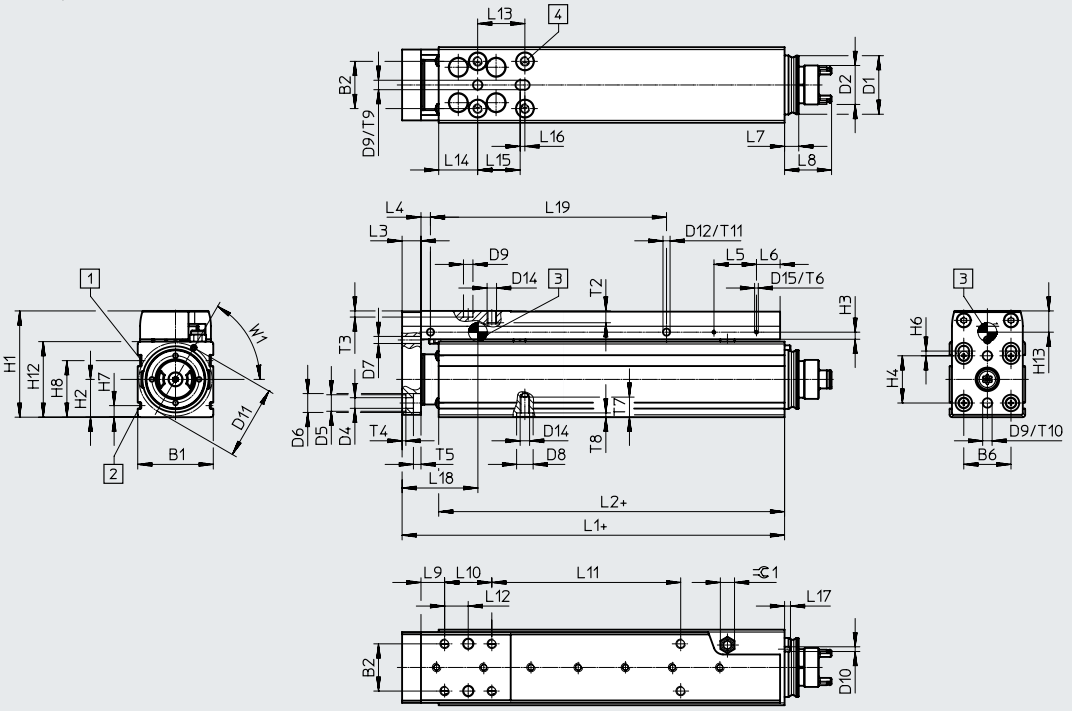

[1] Slot for sensor bracket
[2] Mounting slot
[3] Guide centre
[4] Mounting thread sealed on delivery

Size 60

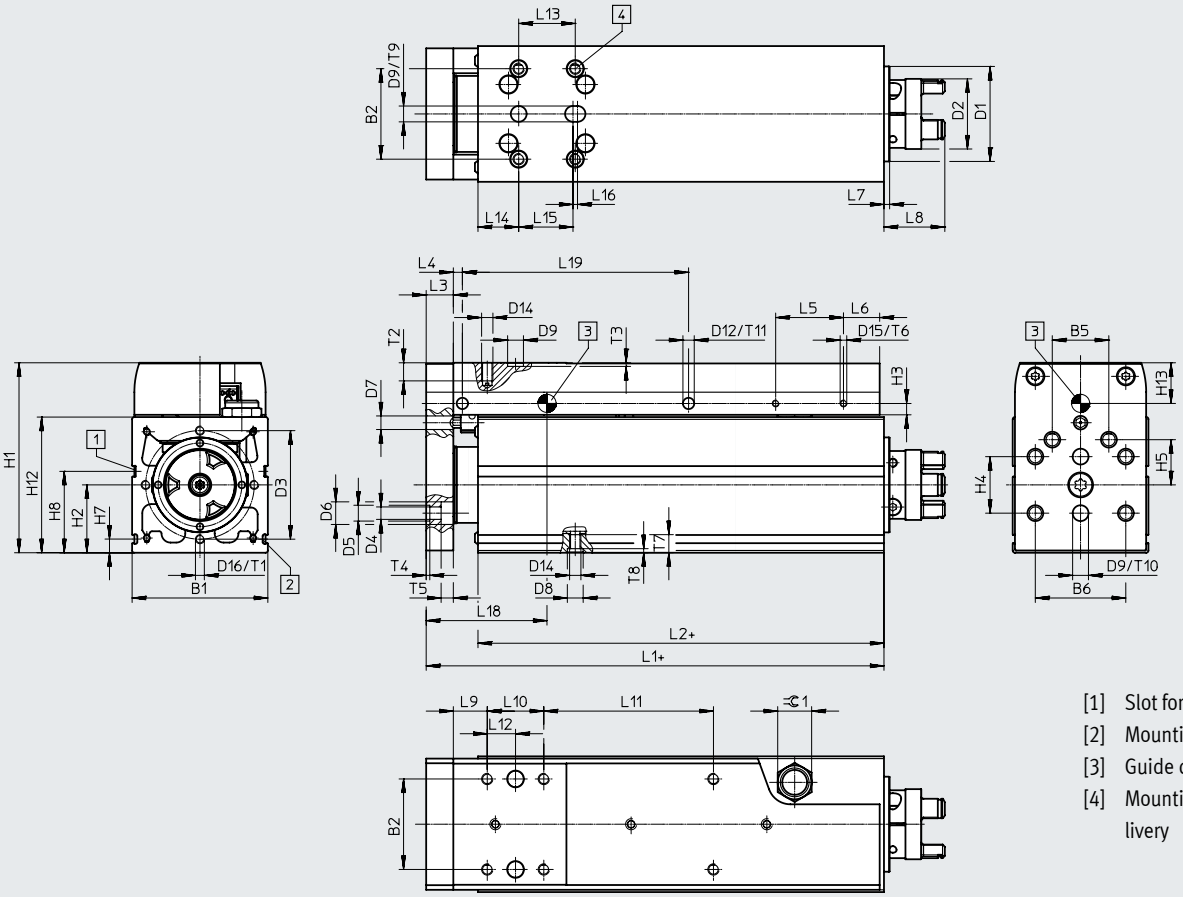

[1] Slot for sensor bracket
[2] Mounting slot
[3] Guide centre
[4] Mounting thread sealed on delivery

Data sheet

Size	B1 ±0.15	B2	B5	B6	D1 Ø	D2 Ø	D3 Ø	D4 Ø H13	D5 Ø H7	D6 Ø H13	D7 Ø	D8 Ø H7	D9 Ø H8	D10 Ø	D11 Ø
32	32	20	–	20	25	16.5	–	4.5	7	8	3	7	4	2	31
45	45	25	–	25	32	16.5	–	5.5	7	10	3	7	5	3	41
60	60	40	25	40	42	31	48	5.5	7	10	6	7	7	–	–

Size	D12 Ø	D13	D14	D15	D16	H1	H2	H3	H4	H5	H6	H7	H8	H12 ±0.15	H13
32	3	–	M4	M1.6	–	45	16	3	20	–	2	4.9	24	32	8.4
45	3	–	M5	M2	–	60.5	22.5	3	25	–	–	6.1	28.5	45	10.7
60	5	M4	M5	M3	M4	84	30	5	25	20	–	6.1	36	60	16.4

Size	L1	L2	L3 +0.2	L4	L5 ±0.1	L6	L7	L8	L9	L10	L12	L13	L14	L15	L16
32	62	46.5	8	4	18	10	6	19.9	10	20	10	20	16.5	18	2
45	73.8	54.5	10	4	24	12	6	19.9	15	25	12.5	25	17.5	24	2
60	102.4	79.5	12	4	30	16	2.5	26.9	15	25	12.5	25	30	24	2

Size	L17	L18	T1	T2	T3 +0.1	T4 +0.1	T5	T6	T7	T8 +0.1	T9 +0.1	T10 +0.1	T11 −0.2	W1	⌯ 1
32	2.5	31.8	–	5	2.6	1.6	3.2	1.5	8.5	1.8	2.6	2.6	1.5	60°	6
45	2	37.3	–	6	1.3	1.6	5.4	4	7	1.8	1.3	1.3	5	60°	12
60	–	53.4	10	8	1.6	1.6	5.4	6	8	1.8	1.6	1.6	5	–	15

Size	Stroke [mm]	L19	L11
32	25	25	0
	50	50	30
	75	75	55
	100	100	80
45	25	25	0
	50	50	25
	75	75	50
	100	100	75
	125	125	100
	150	150	125
60	50	50	25
	75	75	50
	100	100	75
	125	125	100
	150	150	125
	200	200	175

Ordering data

Ordering data

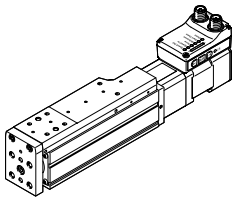

Size	Spindle pitch	Stroke	Part no.	Type
32	8	25	**8083801**	**EGSS-BS-KF-32-25-8P-ST-M-H1-PLK-AA**
		50	**8083802**	**EGSS-BS-KF-32-50-8P-ST-M-H1-PLK-AA**
		75	**8083803**	**EGSS-BS-KF-32-75-8P-ST-M-H1-PLK-AA**
		100	**8083804**	**EGSS-BS-KF-32-100-8P-ST-M-H1-PLK-AA**
45	10	25	**8083814**	**EGSS-BS-KF-45-25-10P-ST-M-H1-PLK-AA**
		50	**8083815**	**EGSS-BS-KF-45-50-10P-ST-M-H1-PLK-AA**
		75	**8083816**	**EGSS-BS-KF-45-75-10P-ST-M-H1-PLK-AA**
		100	**8083817**	**EGSS-BS-KF-45-100-10P-ST-M-H1-PLK-AA**
		125	**8083818**	**EGSS-BS-KF-45-125-10P-ST-M-H1-PLK-AA**
		150	**8083819**	**EGSS-BS-KF-45-150-10P-ST-M-H1-PLK-AA**
60	12	50	**8083716**	**EGSS-BS-KF-60-50-12P-ST-M-H1-PLK-AA**
		75	**8083717**	**EGSS-BS-KF-60-75-12P-ST-M-H1-PLK-AA**
		100	**8083718**	**EGSS-BS-KF-60-100-12P-ST-M-H1-PLK-AA**
		125	**8083719**	**EGSS-BS-KF-60-125-12P-ST-M-H1-PLK-AA**
		150	**8083720**	**EGSS-BS-KF-60-150-12P-ST-M-H1-PLK-AA**
		200	**8083721**	**EGSS-BS-KF-60-200-12P-ST-M-H1-PLK-AA**

Ordering data – Modular product system

Ordering table Size	32	45	60	Conditions	Code		Enter code
Module no.	8083800	8083813	8083713				
Series	EGSS				**EGSS**		EGSS
Drive system	Ball screw drive				**-BS**		-BS
Guide	Recirculating ball bearing guide				**-KF**		-KF
Size	32	45	60		**-...**		
Stroke [mm]	25, 50, 75, 100	25, 50, 75, 100, 125, 150	50, 75, 100, 125, 150, 200		**-...**		
Spindle pitch [mm]	8P	10P	12P		**-...**		
Motor type	Stepper motor ST				**-ST**		-ST
Controller	Integrated				**-M**		-M
Control panel	Integrated				**-H1**		-H1
Bus protocol/control	NPN and IO-Link				**-NLK**		
	PNP and IO-Link				**-PLK**		
End-position sensing	With integrated end-position sensing				**-AA**		-AA
Cable outlet direction	Standard						
	Left				**-L**		
	Underneath				**-D**		
	Right				**-R**		
Electrical accessories	None						
	Adapter for operation as IO-Link device				**+L1**		
Operating instructions	With operating instructions						
	Without operating instructions				**DN**		

Accessories

Profile mounting EAHF-L2-...-P-S
Material:
Anodised wrought aluminium alloy
RoHS-compliant

- For mounting the slide on the side of the profile

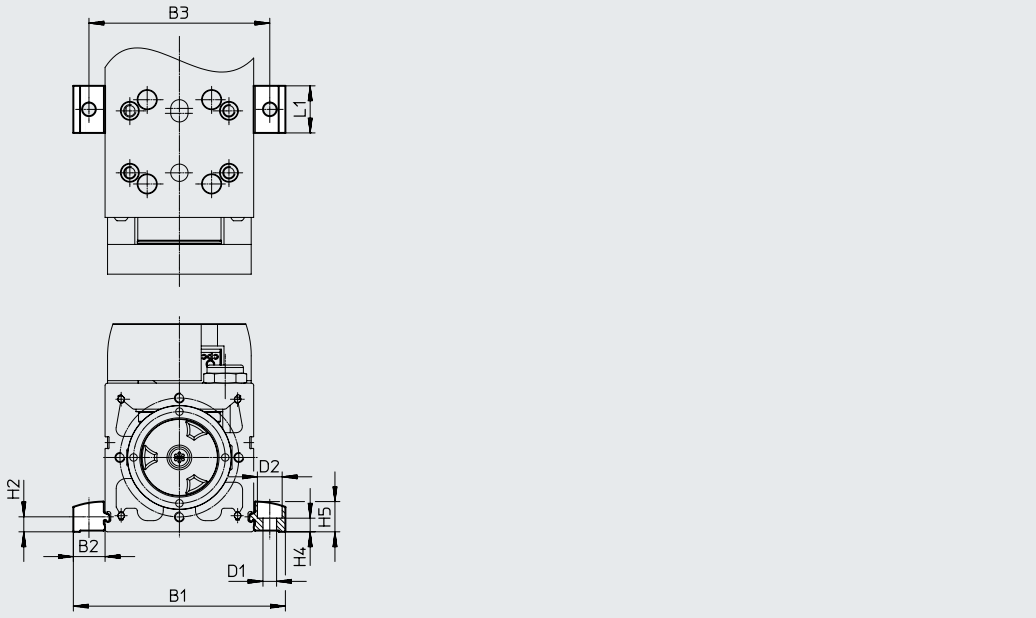

Dimensions and ordering data

For size	B1	B2	B3	D1 ø H13	D2 ø H13	H2
32	51.4	9.7	42	4.5	8	4.9
45	70.6	12.8	58	5.5	10	6.1
60	85.6	12.8	73	5.5	10	6.1

For size	H4 ±0.1	H5	L1	Weight [g]	Part no.	Type
32	4.2	9	19	4	**5183153**	**EAHF-L2-25-P-S**
45	5.5	12.2	19	6	**5184133**	**EAHF-L2-45-P-S**
60	5.5	12.2	19	6	**5184133**	**EAHF-L2-45-P-S**

Accessories

Profile mounting EAHF-L2-...-P
Material:
Anodised wrought aluminium alloy
RoHS-compliant

- For mounting the slide on the side of the profile.
  The profile mounting can be attached to the mounting surface using the drill hole in the centre

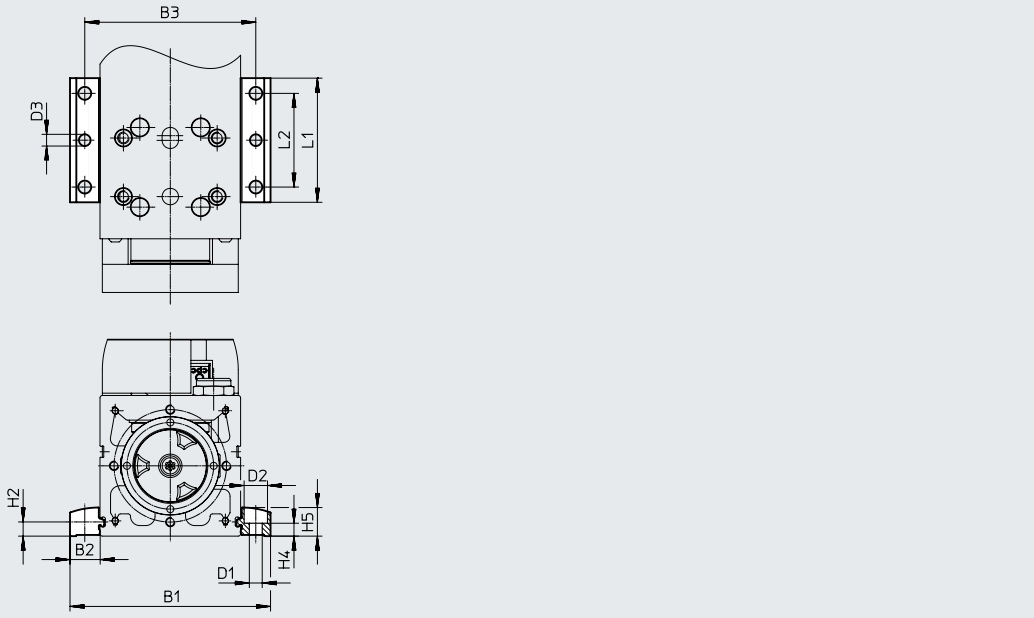

Dimensions and ordering data

For size	B1	B2	B3	D1 Ø H13	D2 Ø H13	D3 Ø	H2
32	51.4	9.7	42	4.5	8	4	4.9
45	70.6	12.8	58	5.5	10	5	6.1
60	85.6	12.8	73	5.5	10	5	6.1

For size	H4 ±0.1	H5	L1	L2	Weight [g]	Part no.	Type
32	4.2	9	53	40	19	**4835684**	**EAHF-L2-25-P**
45	5.5	12.2	53	40	35	**4835728**	**EAHF-L2-45-P**
60	5.5	12.2	53	40	35	**4835728**	**EAHF-L2-45-P**

Accessories

Switch lug EAPM-...-SLS
For sensing using inductive proximity switches SIES-8M

Material:
Galvanised steel
RoHS-compliant

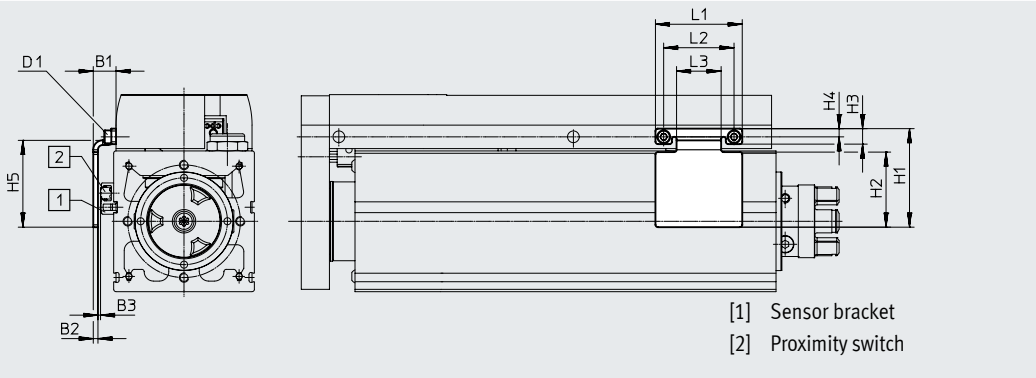

Dimensions and ordering data

For size	B1	B2	B3	D1	H1	H2	H3	H4
32	9.2	2	1.0±0.26	M1.6	27	19	4.3	2.5
45	9.4	2	0.7±0.26	M2	37	28	5.5	3.3
60	9.7	2	0.7±0.31	M3	42	32	6.6	3.5

For size	H5	L1	L2	L3	Weight [g]	Part no.	Type
32	24	22	18	10	10	**8067259**	**EAPM-L2-32-SLS**
45	33	30	24	14	18	**8067260**	**EAPM-L2-45-SLS**
60	37	37	30	19	27	**8067261**	**EAPM-L2-60-SLS**

Sensor bracket EAPM-L2

Material:
Anodised wrought aluminium alloy
RoHS-compliant

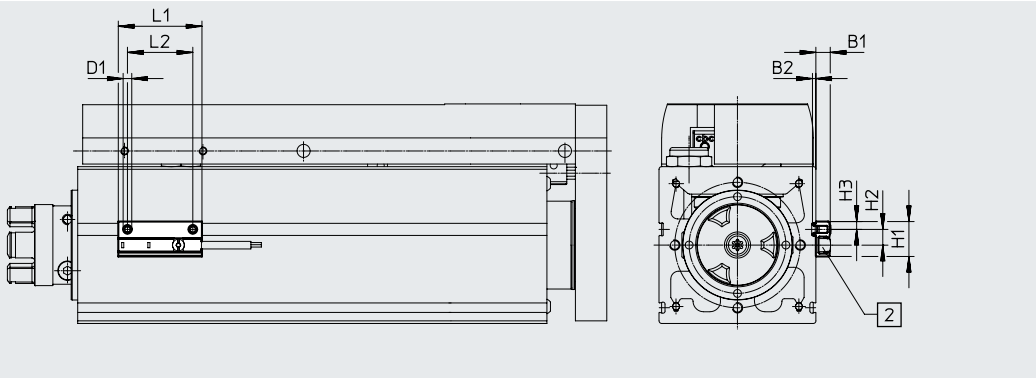

Dimensions and ordering data

For size	B1	B2	D1	H1	H2
32, 45, 60	5.5	1.3	M4	13.4	6

For size	H3	L1	L2	Weight [g]	Part no.	Type
32, 45, 60	3	32	25	4	**4759852**	**EAPM-L2-SH**

Accessories

Ordering data – Centring sleeves

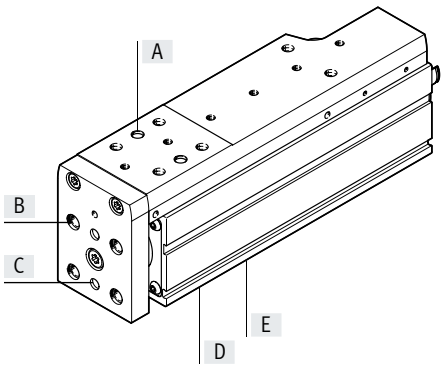

For size	Position	Part no.	Type	PE[1)]
32	A	562959	ZBS-4	10
	B	186717	ZBH-7	
	C	562959	ZBS-4	
	D	186717	ZBH-7	
	E	562959	ZBS-4	
45	A	189652	ZBH-5	
	B	186717	ZBH-7	
	C	189652	ZBH-5	
	D	186717	ZBH-7	
	E	189652	ZBH-5	
60	A	186717	ZBH-7	
	B	186717	ZBH-7	
	C	186717	ZBH-7	
	D	186717	ZBH-7	
	E	186717	ZBH-7	

1) Packaging unit

Ordering data – Push-in fitting for sealing air connection

For size	Part no.	Type
32	133003	QSM-M5-3-I-R
	133004	QSM-M5-4-I-R
45	186266	QSM-G1/8-4-I
	186267	QSM-G1/8-6-I
60	186108	QS-G1/4-6-I
	186110	QS-G1/4-8-I

Ordering data – Proximity switches for T-slot, inductive

Data sheets → Internet: sies

	Type of mounting	Switching output	Electrical connection	Cable length [m]	Part no.	Type
N/O contact						
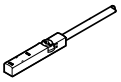	Insertable in the slot from above, flush with the cylinder profile	PNP	Cable, 3-wire	7.5	551386	SIES-8M-PS-24V-K-7,5-OE
			Plug M8x1, 3-pin	0.3	551387	SIES-8M-PS-24V-K-0,3-M8D
		NPN	Cable, 3-wire	7.5	551396	SIES-8M-NS-24V-K-7,5-OE
			Plug M8x1, 3-pin	0.3	551397	SIES-8M-NS-24V-K-0,3-M8D
N/C contact						
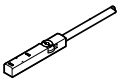	Insertable in the slot from above, flush with the cylinder profile	PNP	Cable, 3-wire	7.5	551391	SIES-8M-PO-24V-K-7,5-OE
			Plug M8x1, 3-pin	0.3	551392	SIES-8M-PO-24V-K-0,3-M8D
		NPN	Cable, 3-wire	7.5	551401	SIES-8M-NO-24V-K-7,5-OE
			Plug M8x1, 3-pin	0.3	551402	SIES-8M-NO-24V-K-0,3-M8D

Accessories

Ordering data – Proximity switch for T-slot, magneto-resistive

Data sheets → Internet: smt

	Type of mounting	Switching output	Electrical connection	Cable length [m]	Part no.	Type
N/O contact						
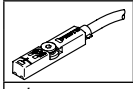	Inserted in the slot from above, flush with the cylinder profile, short design	PNP	Cable, 3-wire	2.5	**574335**	**SMT-8M-A-PS-24V-E-2,5-OE**
			Plug M8x1, 3-pin	0.3	**574334**	**SMT-8M-A-PS-24V-E-0,3-M8D**
N/C contact						
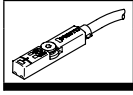	Inserted in the slot from above, flush with the cylinder profile, short design	PNP	Cable, 3-wire	7.5	**574340**	**SMT-8M-A-PO-24V-E-7,5-OE**

Ordering data – Connecting cables

Data sheets → Internet: nebu

	Electrical connection, left	Electrical connection, right	Cable length [m]	Part no.	Type
	Straight socket, M8x1, 3-pin	Cable, open end, 3-wire	2.5	**541333**	**NEBU-M8G3-K-2.5-LE3**
			5	**541334**	**NEBU-M8G3-K-5-LE3**
	Angled socket, M8x1, 3-pin	Cable, open end, 3-wire	2.5	**541338**	**NEBU-M8W3-K-2.5-LE3**
			5	**541341**	**NEBU-M8W3-K-5-LE3**

Note

For sizes 45 and 60, inductive proximity switches SIES-8M must be used for strokes greater than 100 mm.

Proximity switches are optional and only required in order to sense any intermediate positions.

Ordering data – IO-Link master USB

Data sheets → Internet: cdsu

	Description	Cable length [m]	Part no.	Type
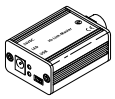	• For using the unit with IO-Link • An external power supply plug is additionally required (not in scope of delivery)	0.3	**8091509**	**CDSU-1**

Ordering data – Adapter

Data sheets → Internet: nefc

	Electrical connection, left	Electrical connection, right	Cable length [m]	Part no.	Type
	Straight socket, M12x1, 8-pin	Straight plug, M12x1, 5-pin	0.3	**8080777**	**NEFC-M12G8-0.3-M12G5-LK**

Accessories

Ordering data – Supply cables

Data sheets → Internet: nebl

	Electrical connection, left	Electrical connection, right	Cable length [m]	Part no.	Type
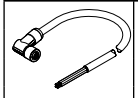	Angled socket, M12x1, 4-pin	Cable, open end, 4-wire	2	**8080778**	**NEBL-T12W4-E-2-N-LE4**
			5	**8080779**	**NEBL-T12W4-E-5-N-LE4**
			10	**8080780**	**NEBL-T12W4-E-10-N-LE4**
			15	**8080781**	**NEBL-T12W4-E-15-N-LE4**
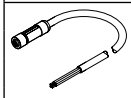	Straight socket, M12x1, 4-pin	Cable, open end, 4-wire	2	**8080790**	**NEBL-T12G4-E-2-N-LE4**
			5	**8080791**	**NEBL-T12G4-E-5-N-LE4**
			10	**8080792**	**NEBL-T12G4-E-10-N-LE4**
			15	**8080793**	**NEBL-T12G4-E-15-N-LE4**

Ordering data – Connecting cables

Data sheets → Internet: nebc

	Electrical connection, left	Electrical connection, right	Cable length [m]	Part no.	Type
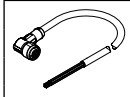	Angled socket, M12x1, 8-pin	Cable, open end, 8-wire	2	**8094476**	**NEBC-M12W8-E-2-N-B-LE8**
			5	**8094478**	**NEBC-M12W8-E-5-N-B-LE8**
			10	**8094481**	**NEBC-M12W8-E-10-N-B-LE8**
			15	**8094479**	**NEBC-M12W8-E-15-N-B-LE8**
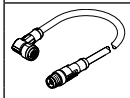		Straight plug, M12x1, 8-pin	2	**8080786**	**NEBC-M12W8-E-2-N-M12G8**
			5	**8080787**	**NEBC-M12W8-E-5-N-M12G8**
			10	**8080788**	**NEBC-M12W8-E-10-N-M12G8**
			15	**8080789**	**NEBC-M12W8-E-15-N-M12G8**
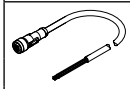	Straight socket, M12x1, 8-pin	Cable, open end, 8-wire	2	**8094480**	**NEBC-M12G8-E-2-N-B-LE8**
			5	**8094477**	**NEBC-M12G8-E-5-N-B-LE8**
			10	**8094482**	**NEBC-M12G8-E-10-N-B-LE8**
			15	**8094475**	**NEBC-M12G8-E-15-N-B-LE8**
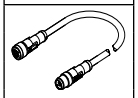		Straight plug, M12x1, 8-pin	2	**8080782**	**NEBC-M12G8-E-2-N-M12G8**
			5	**8080783**	**NEBC-M12G8-E-5-N-M12G8**
			10	**8080784**	**NEBC-M12G8-E-10-N-M12G8**
			15	**8080785**	**NEBC-M12G8-E-15-N-M12G8**

Note
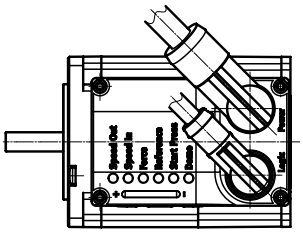
The cables are positioned at a 45° angle to the axis.