Guide axes ELFA, without drive

Guide axes ELFA, without drive

Key features

At a glance

- Driveless linear guide units with guide and freely movable slide
- The guide axis is designed to support force and torque capacity in multi-axis applications
- Higher torsional resistance
- Reduced vibrations with dynamic loads
- Drive axis and guide axis can be placed next to or above one another

System product for handling and assembly technology

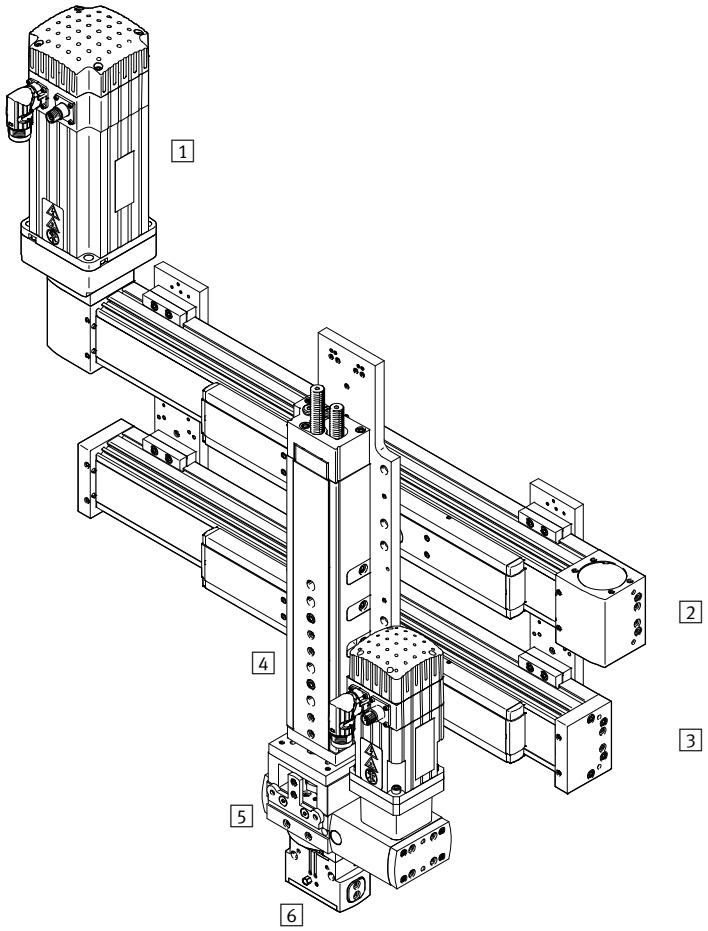

System components and accessories

		Description	➔ Internet
1	Motors	Servo and stepper motors, with or without gear unit	motor
2	Axes	Wide range of combinations possible within handling and assembly technology	axis
3	Guide axes	For supporting force and torque capacity in multi-axis applications	guide axis
4	Drives	Wide range of combinations possible within handling and assembly technology	drive
5	Adapters	For drive/drive and drive/gripper connections	gripper
6	Grippers	Wide range of variations possible within handling and assembly technology	gripper

Guide axes ELFA, without drive

Overview

Guide axes and the corresponding axes

Guide axis EGC-FA

- Can be combined with:
  - Toothed belt axis EGC-TB
  - Spindle axis EGC-BS
- For size 70 … 185
- Load capacity up to max. 15200 N or 1157 Nm

Guide axis DGC-FA

- Can be combined with:
  - Linear drive DGC-KF
- For size 8 … 63
- Load capacity up to max. 15200 N or 1157 Nm

Guide axis ELFR

- Can be combined with:
  - Toothed belt axis ELGR
- For size 35 … 55
- Load capacity up to max. 300 N or 124 Nm

Design	Can be combined with	Size	Working stroke [mm]	Speed [m/s]	Guide characteristics: Forces and torques Fy [N]	Fz [N]	Mx [Nm]	My [Nm]	Mz [Nm]	➔ Page/ Internet
ELFA-KF – Recirculating ball bearing guide										
	• Toothed belt axis ELGA-TB-KF • Spindle axis ELGA-BS-KF	70	50 … 5000	5	1500	1850	16	132	132	7
		80	50 … 8500	5	2500	3050	36	228	228	
		120	50 … 8500	5	5500	6890	104	680	680	
ELFA-RF – Roller bearing guide										
	Toothed belt axis ELGA-TB-RF	70	50 … 7000	10	500	500	11	20	20	23
		80	50 … 7000	10	800	800	30	90	90	

Sealing air connections

1 Sealing air connections

- Application of negative pressure minimises the dispersal of abraded particles into the environment
- Application of gauge pressure prevents dirt from getting into the axis

Guide axes ELFA-KF, without drive, with recirculating ball bearing guide

Peripherals overview

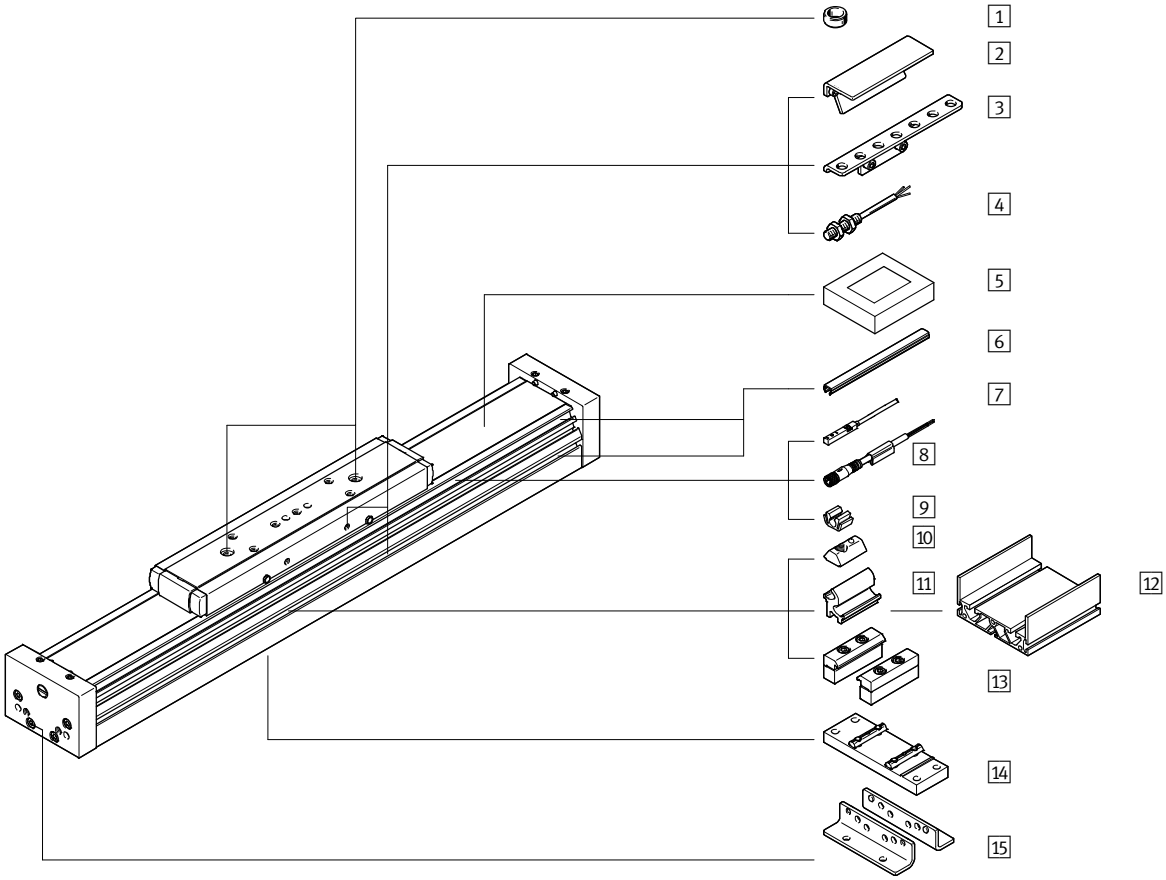

Slide variants	
ELFA-...	ELFA-...-ZL/-ZR
Standard slide	Additional slide, left or right

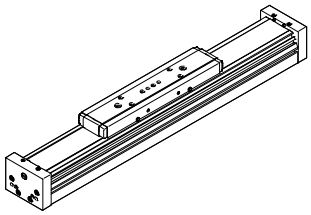

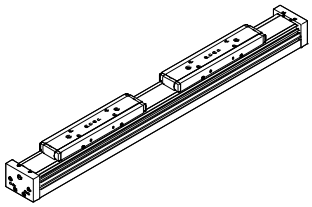

Guide axes ELFA-KF, without drive, with recirculating ball bearing guide

Peripherals overview

Variants and accessories			
	Type	**Description**	**➔ Page/Internet**
1	Centring sleeve/centring pins ZBH/ZBS	• For centring loads and attachments on the slide – Included in the scope of delivery: For size 70: 2x ZBS-5 For size 80, 120: 2x ZBH-9	39
2	Switch lug SF-EGC	For sensing the slide position	37
3	Sensor bracket HWS-EGC	Adapter for mounting the inductive proximity sensors (round design) on the axis	38
4	Proximity sensor, M8 SIEN-M8	Inductive proximity sensor, round design	41
5	Clamping component EADT	Tool for retensioning the cover strip	39
6	Slot cover ABP	For protecting against contamination	39
7	Proximity sensor, T-slot SIES-8M	Inductive proximity sensor, for T-slot	41
8	Connecting cable NEBU	For proximity sensor	41
9	Clip SMBK	For mounting the proximity sensor cable in the slot	39
10	Slot nut NST	For mounting attachments	39
11	Adapter kit DHAM	For mounting the support profile on the axis	40
12	Support profile HMIA	For guiding an energy chain	40
13	Profile mounting MUE	For mounting the axis on the side of the profile	35
14	Central support EAHF-L5	For mounting the axis from underneath on the profile	36
15	Foot mounting HPE	• For mounting the axis on the end cap • With higher forces and torques, the axis should be mounted using the profile	34

Guide axes ELFA-KF, without drive, with recirculating ball bearing guide

Type codes

ELFA	–	KF	–	70	–	800	–	20H	–		–	

Type	
ELFA	Guide axis

Guide	
KF	Recirculating ball bearing guide

Size

Stroke [mm]

Stroke reserve

Slide design	
–	None
ZL	1 slide on left
ZR	1 slide on right

Operating instructions	
–	With operating instructions
DN	Without operating instructions

Guide axes ELFA-KF, without drive, with recirculating ball bearing guide

Technical data

Function

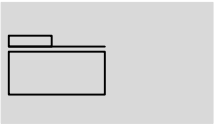

Size
70, 80, 120

Stroke length
50 … 8500 mm

www.festo.com

General technical data				
Size		70	80	120
Design		Guide		
Guide		Recirculating ball bearing guide		
Mounting position		Any		
Working stroke	[mm]	50 … 5000	50 … 8500	
Max. no-load resistance to shifting	[N]	11	12	23
Max. speed	[m/s]	5		
Max. acceleration	[m/s²]	50		

Operating and environmental conditions		
Ambient temperature[1]	[°C]	–10 … +60
Degree of protection		IP40

1) Note operating range of proximity sensors

Weight [kg]			
Size	70	80	120
Product weight with 0 mm stroke[1]	2.22	3.74	8.5
Additional weight per 1000 mm stroke	3.84	4.89	10.32
Moving mass	0.77	1.57	3.35

1) Incl. slide

Guide axes ELFA-KF, without drive, with recirculating ball bearing guide

Technical data

Materials

Sectional view

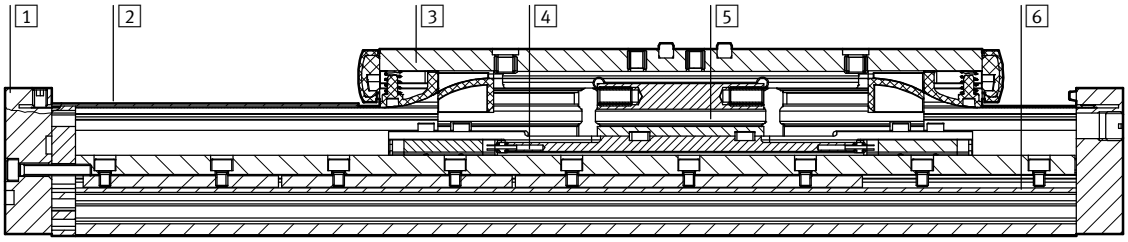

Axis		
1	End cap	Anodised wrought aluminium alloy
2	Cover strip	Stainless steel
3	Slide	Anodised wrought aluminium alloy
4	Roller carriage	Stainless steel, tempered steel
5	Guide rail	Stainless steel, corrotec-coated tempered steel
6	Profile	Anodised wrought aluminium alloy
	Note on materials	RoHS-compliant
		Contains paint-wetting impairment substances

Stroke reserve

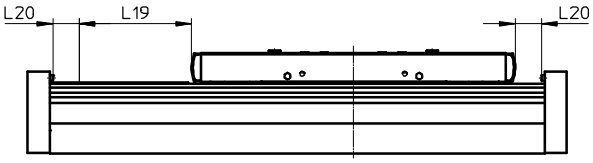

L19 = Nominal stroke
L20 = Stroke reserve

- The stroke reserve is a safety distance from the mechanical end position and is not used in normal operation
- The sum of the nominal stroke and 2x stroke reserve must not exceed the maximum permissible working stroke
- The stroke reserve length can be freely selected
- The stroke reserve is defined via the "stroke reserve" characteristic in the modular product system.

Example:
Type ELFA-KF-70-500-20H-...

Nominal stroke	= 500 mm
2x stroke reserve	= 40 mm
Working stroke	= 540 mm

(540 mm = 500 mm + 2x 20 mm)

Identical installation length between toothed belt axis ELGA-TB-KF and guide axis ELFA-KF

The different end cap lengths result in different overall lengths despite the nominal stroke and stroke reserve being the same.

To achieve the same overall length between two axes, the compensation dimension L21 must be added to the stroke reserve in the case of the guide axis ELFA-KF.

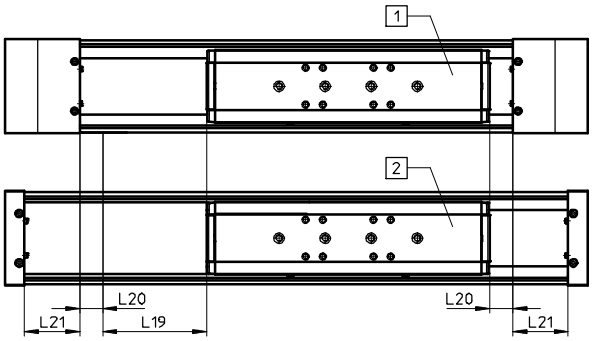

1 ELGA-TB-KF
2 ELFA-KF
L19 = Nominal stroke
L20 = Stroke reserve
L21 = Compensation dimension

Size		70	80	120
Compensation dimension	[mm]	41.5	48	75

Characteristic load values

The indicated forces and torques refer to the centre of the guide. The point of application of force is the point where the centre of the guide and the longitudinal centre of the slide intersect. These values must not be exceeded during dynamic operation. Special attention must be paid to the cushioning phase.

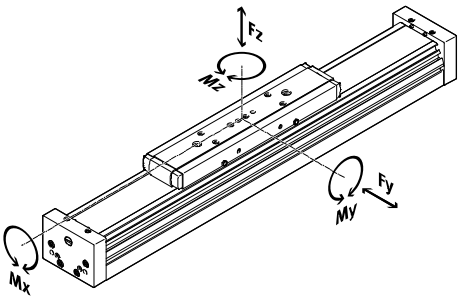

Distance from the slide surface to the centre of the guide

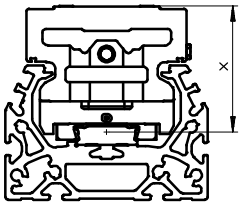

Distance from the slide surface to the centre of the guide			
Size	70	80	120
Dimension x [mm]	37	50	70

Max. permissible forces and torques for a service life of 5000 km			
Size	70	80	120
$Fy_{max.}$	1500	2500	5500
$Fz_{max.}$	1850	3050	6890
$Mx_{max.}$	16	36	104
$My_{max.}$	132	228	680
$Mz_{max.}$	132	228	680

Note

For a guide system to have a service life of 5000 km, the load comparison factor must have a value of fv ≤ 1, based on the maximum permissible forces and torques for a service life of 5000 km.

If the axis is subjected to two or more of the indicated forces and torques simultaneously, the following equation must be satisfied in addition to the indicated maximum loads:

Calculating the load comparison factor:

$$f_v = \frac{|F_{y,dyn}|}{F_{y,max}} + \frac{|F_{z,dyn}|}{F_{z,max}} + \frac{|M_{x,dyn}|}{M_{x,max}} + \frac{|M_{y,dyn}|}{M_{y,max}} + \frac{|M_{z,dyn}|}{M_{z,max}} \leq 1$$

Calculating the service life

The service life of the guide depends on the load. To provide a rough indication of the service life of the guide, the graph below plots the load comparison factor f_v against the service life.

These values are only theoretical. You must consult your local contact person at Festo for load comparison factors f_v greater than 1.5.

Load comparison factor f_v as a function of service life

Example:
A user wants to move an X kg load. Using the formula ➔ page 9 gives a value of 1.5 for the load comparison factor f_v. According to the graph, the guide would have a service life of approx. 3000 km. Reducing the acceleration reduces the Mz and My values. A load comparison factor f_v of 1 now gives a service life of 10,000 km.

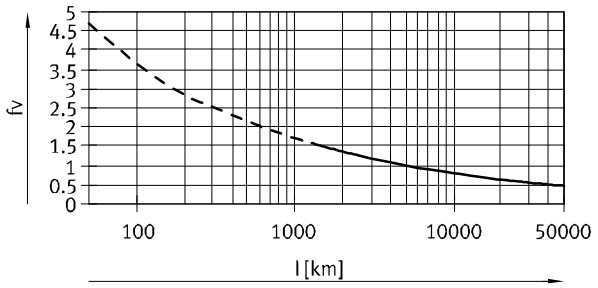

Note

PositioningDrives engineering software www.festo.com

The software can be used to calculate a guide workload for a service life of 10,000 km.

$f_v > 1.5$ are only theoretical comparison values for the roller bearing guide.

Comparison of the characteristic load values for 5000 km with dynamic forces and torques of recirculating ball bearing guides

The characteristic load values of roller guides are standardised to ISO and JIS using dynamic and static forces and torques. These forces and torques are based on an expected guide system service life of 100 km to ISO or 50 km to JIS.

As the characteristic load values are dependent on the service life, the maximum permissible forces and torques for a 5000 km service life cannot be compared with the dynamic forces and torques of roller guides to ISO/JIS.

To make it easier to compare the guide capacity of linear axes ELGA with roller guides, the table below lists the theoretically permissible forces and torques for a calculated service life of 100 km. This corresponds to the dynamic forces and torques to ISO.

These 100 km values have been calculated mathematically and are only to be used for comparing with dynamic forces and torques to ISO. The drives must not be loaded with these characteristic values as this could damage the axes.

Max. permissible forces and torques for a theoretical service life of 100 km (from a guide perspective only)

Size		70	80	120
$Fy_{max.}$	[N]	5520	9200	20240
Fz_{max}	[N]	6808	11224	25355
$Mx_{max.}$	[Nm]	59	132	383
$My_{max.}$	[Nm]	486	839	2502
$Mz_{max.}$	[Nm]	486	839	2502

Second moment of area

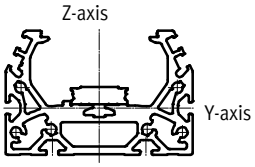

Size		70	80	120
Iy	[mm^4]	1.46x10^5	2.57x10^5	1.26x10^5
Iz	[mm^4]	4.59x10^5	9.14x10^6	4.37x10^6

Maximum permissible support span L (without profile mounting MUE/central support EAHF) as a function of force F

In order to limit deflection in the case of large strokes, the axis may need to be supported.

The following graphs can be used to determine the maximum permissible support span L as a function of force F acting on the axis. The deflection is f = 0.5 mm.

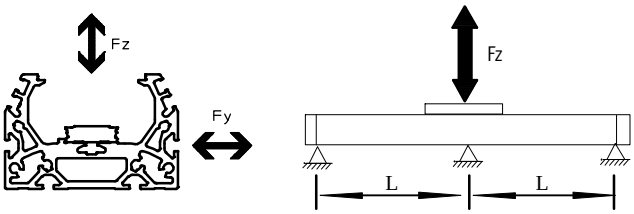

Force Fy

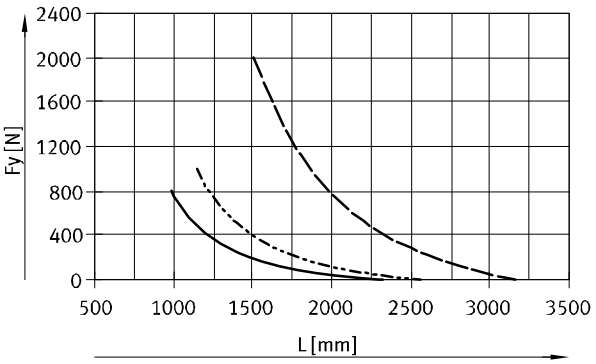

Force Fz

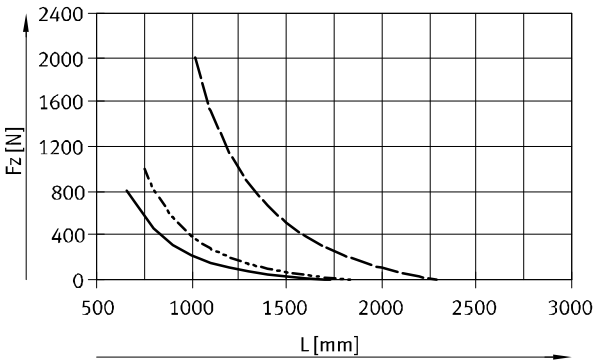

ELFA-KF-70
ELFA-KF-80
ELFA-KF-120

Recommended deflection limits

Adherence to the following deflection limits is recommended so as not to impair the functional performance of the axes. Greater deformation can result in increased friction, greater wear and reduced service life.

Size	Dyn. deflection (moving load)	Stat. deflection (stationary load)
70 ... 120	0.05% of the axis length, max. 0.5 mm	0.1% of the axis length

Central lubrication

The lubrication connections enable the guide of the guide axis ELFA-KF to be permanently lubricated in applications in humid or wet ambient conditions using semi- or fully automatic relubrication devices.

- The axes are suitable for oils and greases
- The connection options are already available in the standard design of the axes
- There is a dedicated lubrication connection for the spindle nut and the two ball cassettes

Slide dimensions
➔ page 15

Structure of a central lubrication system

A central lubrication system requires various additional components. The illustration shows different options (using a hand pump, pneumatic container pump or electric container pump) required as a minimum for designing a central lubrication system. Festo does not sell these additional components; however, they can be obtained from the following companies:
– Lincoln
– Bielomatik
– SKF (Vogel)
Festo recommends these companies because they can supply all the necessary components.

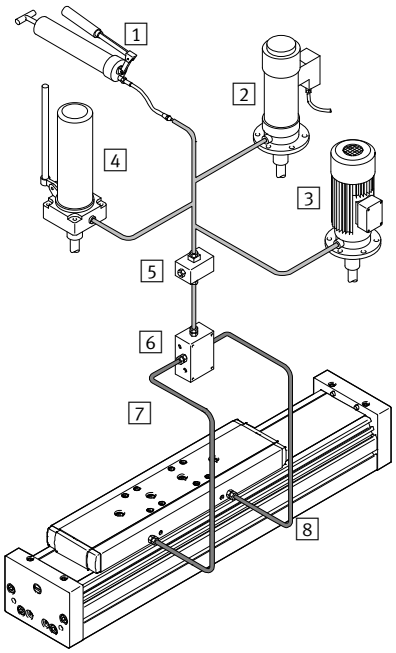

1 Hand pump
2 Pneumatic container pump
3 Electric container pump
4 Manually operated container pump
5 Nipple block
6 Distributor block
7 Tubing or piping
8 Fittings

Guide axes ELFA-KF, without drive, with recirculating ball bearing guide

Technical data

Dimensions Download CAD data ➔ **www.festo.com**

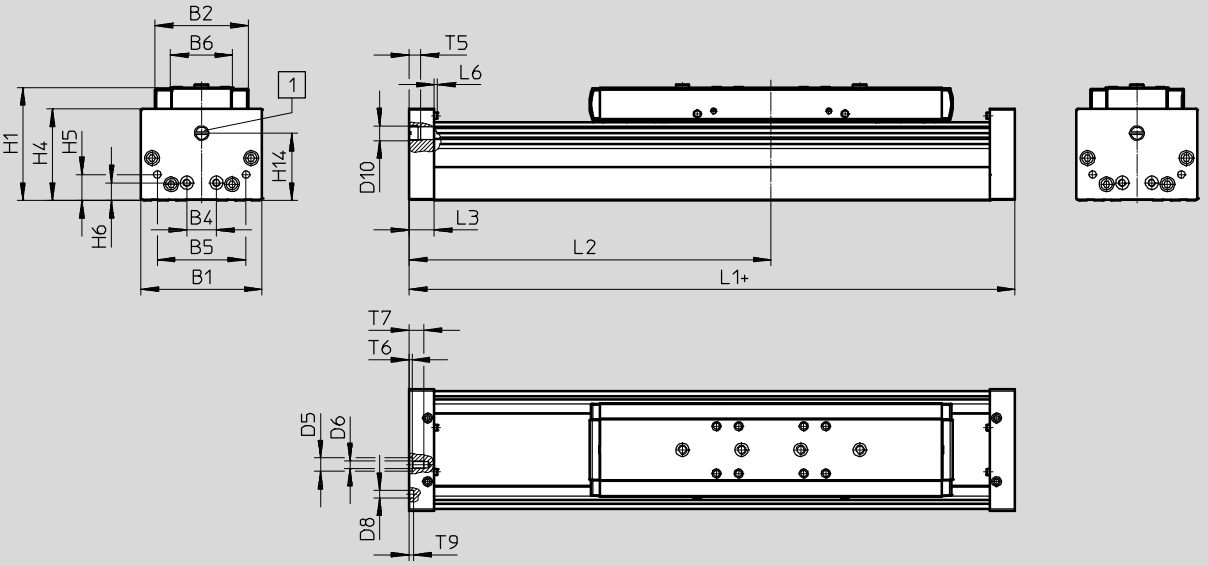

\+ = plus stroke length + 2 x stroke reserve

1 Sealing air connection

Size	B1	B2	B4	B5	B6	D5 ∅ H7	D6	D8 ∅ H7	D10	H1	H4
70	69	48.2	30	45	30	–	M5	5	G1/8	64	50.5
80	82	63.2	20	60	42	9	M5	5	G1/8	76.5	62
120	120	95	40	80	68	–	M8	9	G1/8	111.5	89

Size	H5	H6	H14	L1	L2 Min.	L3	L6	T5	T6	T7	T9
70	13	13	32	263	136.5	16	2.3	8	–	10	3.1
80	17.5	12	40	290	145	17	2.3	8	2.1	10.1	3.1
120	22	22	65	396	198	25	2.5	8	–	16	2.1

Dimensions Download CAD data ➔ **www.festo.com**

Profile

Size 70 **Size 80** **Size 120**

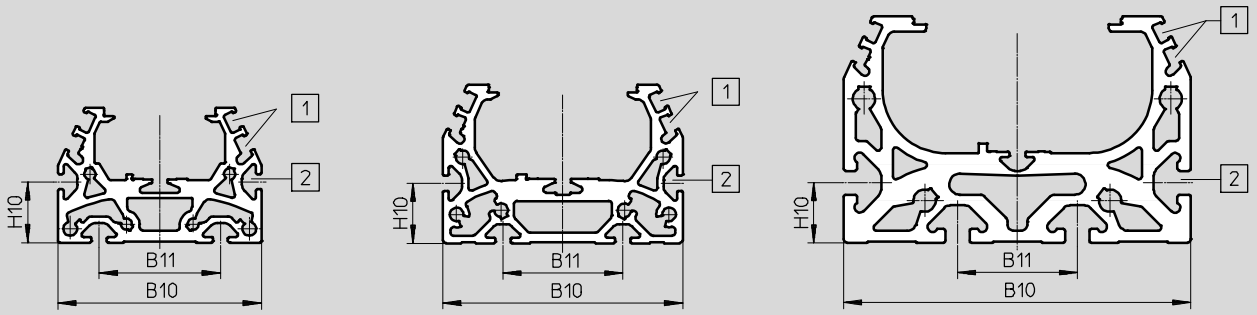

1 Sensor slot for proximity sensor
2 Mounting slot for slot nut

Size	B10	B11	H10
70	67	40	20
80	80	40	20
120	116	40	20

Note

Requirements for the flatness of the bearing surface and of attachments as well as for use in parallel structures
➔ www.festo.com/sp
User Documentation

Guide axes ELFA-KF, without drive, with recirculating ball bearing guide

Technical data

Dimensions Download CAD data ➔ **www.festo.com**

Slide

Size 70

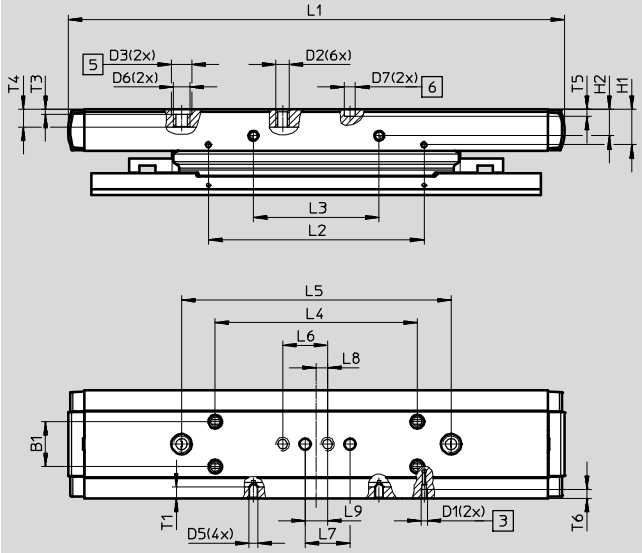

3 Lubrication connections
5 Hole for centring sleeve ZBH
6 Hole for centring pin ZBS

Size	B1	D1	D2	D3	D5	D6	D7	H1	H2	L1	L2	L3
				∅			∅					
	±0.1			H7			H7	±0.1	±0.1		±0.1	±0.1
70	20	M6	M5	9	M4	M6	5	14.2	11.7	221	96	56

Size	L4	L5	L6	L7	L8	L9	T1	T3	T4	T5	T6	
											Min.	Max.
	±0.1		±0.1	±0.03		±0.1		+0.1		±0.1		
70	90	120	20	20	5	10	5.1	2.1	7.5	3.1	4.2	$4.6_{-0.1}$

Dimensions Download CAD data ➔ **www.festo.com**

Slide

Size 80

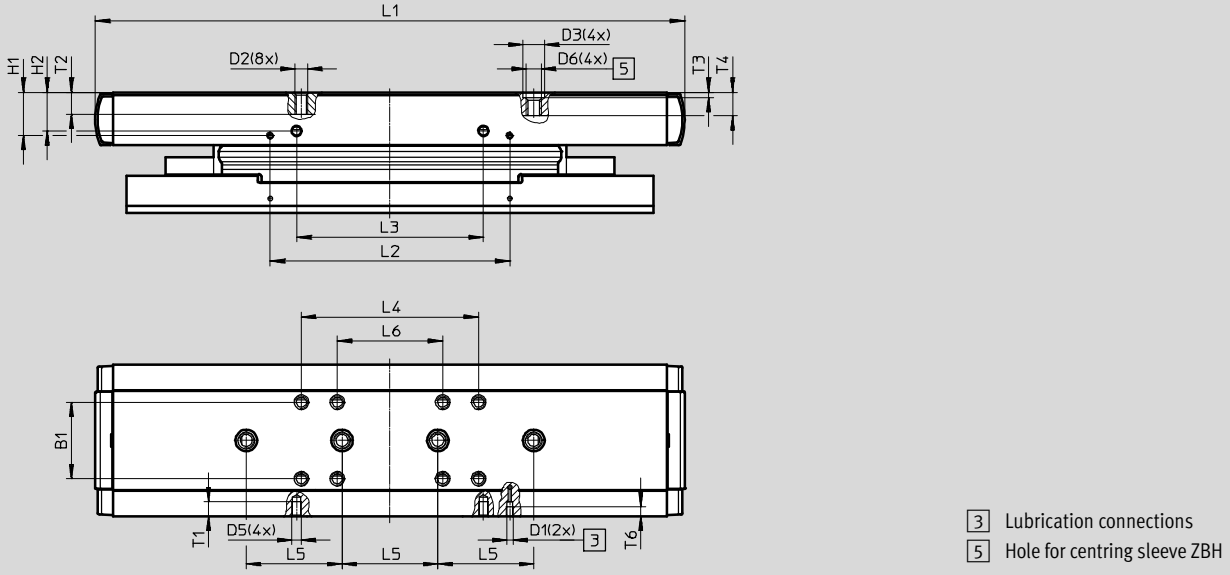

Size	B1 ±0.1	D1	D2	D3 ∅ H7	D5	D6	H1 ±0.1	H2 ±0.1	L1	L2 ±0.1
80	32	M3	M5	9	M4	M6	17.9	16	246	100

Size	L3 ±0.1	L4 ±0.1	L5 ±0.03	L6 ±0.1	T1	T2	T3 +0.1	T4 −0.2	T6
80	78	74	40	44	6	9	2.1	9.7	4

Dimensions Download CAD data ➔ **www.festo.com**

Slide

Size 120

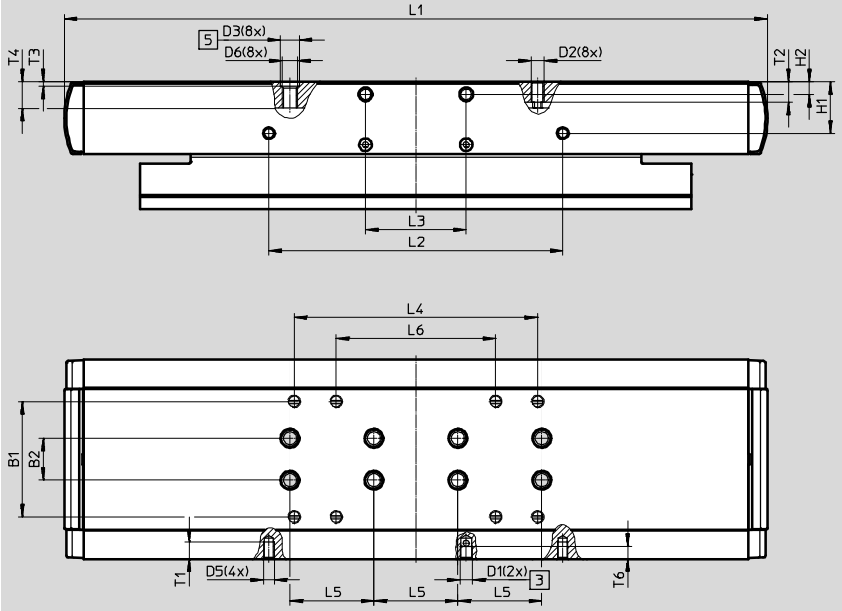

3 Lubrication connections
5 Hole for centring sleeve ZBH

Size	B1 ±0.1	B2 ±0.03	D1	D2	D3 ∅ H7	D5	D6	H1 ±0.1	H2	L1
120	55	20	M6	M5	9	M5	M6	24.5	6	335

Size	L2 ±0.1	L3 ±0.1	L4 ±0.1	L5 ±0.03	L6 ±0.1	T1	T2	T3 +0.1	T4 −0.3	T6
120	140	48	116	40	76	8	9.7	2.1	12.6	6

Guide axes ELFA-KF, without drive, with recirculating ball bearing guide

Ordering data – Modular product system

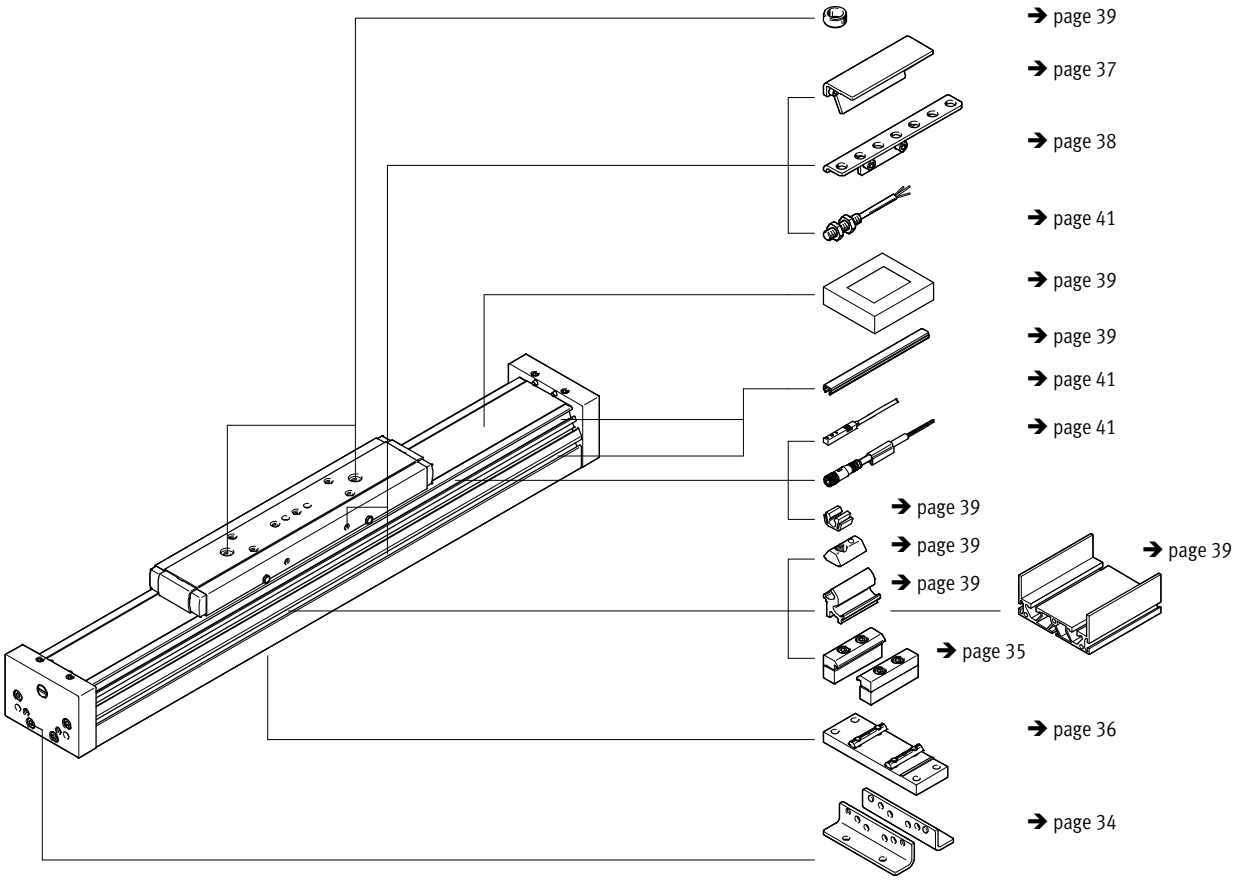

Guide axes ELFA-KF, without drive, with recirculating ball bearing guide

Ordering data – Modular product system

Ordering table								
Size		70	80	120	Condi-tions	Code		Entry code
M	Module no.	**8037970**	**8037971**	**8037972**				
	Design	Guide axis				**ELFA**		ELFA
	Guide	Recirculating ball bearing guide				**-KF**		-KF
	Size [mm]	70	80	120		**-...**		-...
	Stroke length [mm]	50 ... 5000	50 ... 8500			**-...**		-...
	Stroke reserve [mm]	0 ... 999 (0 = no stroke reserve)			1	**-...H**		
O	Slide design	Standard slide						
		1 slide on left				**-ZL**		
		1 slide on right				**-ZR**		
	Operating instructions	With operating instructions						
		Without operating instructions				**-DN**		

1 ... The sum of the nominal stroke and 2x stroke reserve must be at least 50 mm and must not exceed the maximum stroke length.

M Mandatory data
O Options

Transfer order code

	ELFA	–	KF	–		–		–		–		–		–		–

Guide axes ELFA-RF, without drive, with roller bearing guide

Peripherals overview

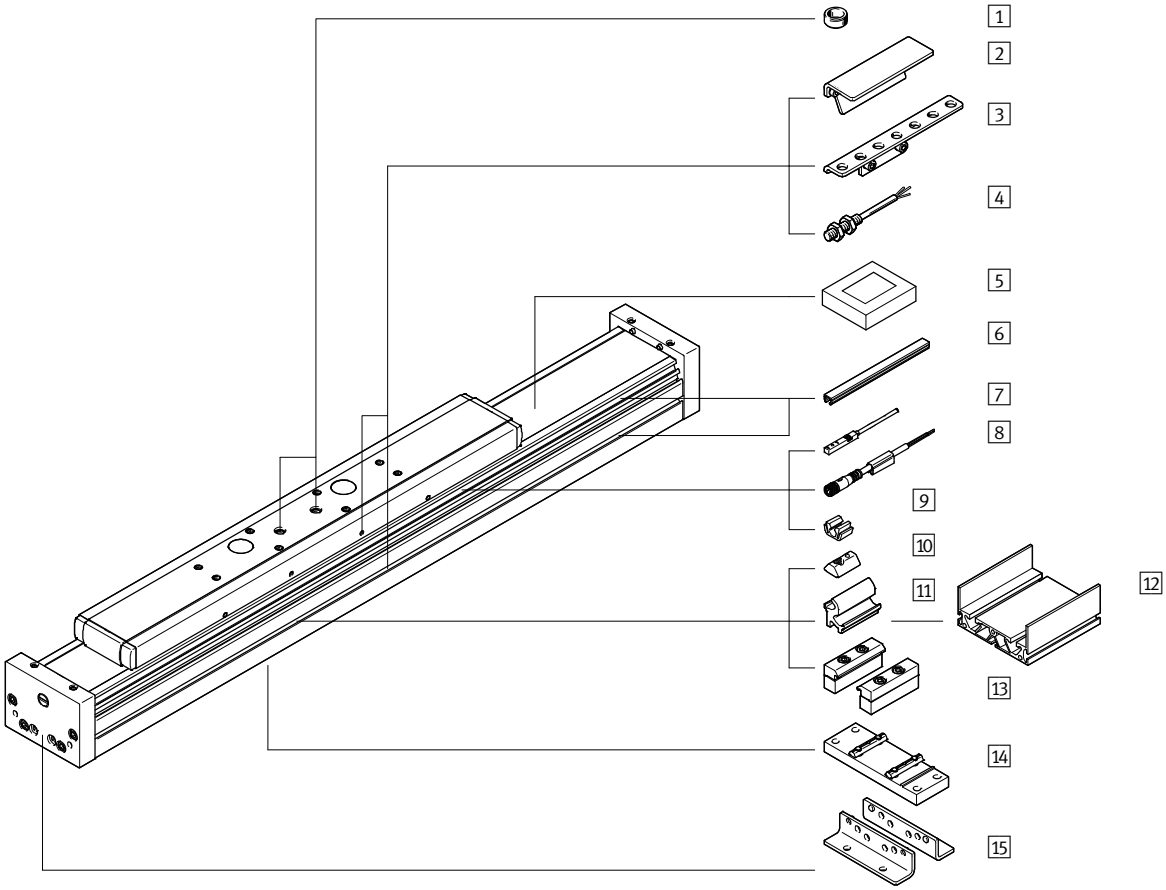

Slide variants		
ELFA-... Standard slide	ELFA-...-S Short slide	ELFA-...-L Long slide
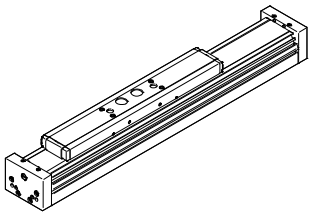	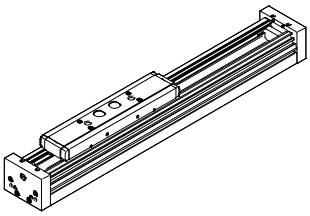 This variant is only available without strip cover.	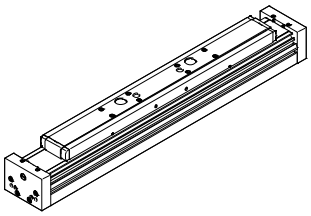

Guide axes ELFA-RF, without drive, with roller bearing guide

Peripherals overview

Variants and accessories			
	Type	Description	➔ Page/Internet
1	Centring sleeve ZBH	• For centring loads and attachments on the slide – Included in the scope of delivery: For size 70, 80: 2x ZBH-9	39
2	Switch lug SF-EGC	For sensing the slide position	37
3	Sensor bracket HWS-EGC	Adapter for mounting the inductive proximity sensors (round design) on the axis	38
4	Proximity sensor, M8 SIEN-M8	Inductive proximity sensor, round design	41
5	Clamping component EADT	Tool for retensioning the cover strip	39
6	Slot cover ABP	For protecting against contamination	39
7	Proximity sensor, T-slot SIES-8M	Inductive proximity sensor, for T-slot	41
8	Connecting cable NEBU	For proximity sensor	41
9	Clip SMBK	For mounting the proximity sensor cable in the slot	39
10	Slot nut NST	For mounting attachments	39
11	Adapter kit DHAM	For mounting the support profile on the axis	39
12	Support profile HMIA	For guiding an energy chain	39
13	Profile mounting MUE	For mounting the axis on the side of the profile	35
14	Central support EAHF-L5	For mounting the axis from underneath on the profile	36
15	Foot mounting HPE	• For mounting the axis on the end cap • With higher forces and torques, the axis should be mounted using the profile	34

Guide axes ELFA-RF, without drive, with roller bearing guide

Type codes

ELFA	–	RF	–	70	–	800	–	20H	–		–		–	

Type	
ELFA	Guide axis

Guide	
RF	Roller bearing guide

Size

Stroke [mm]

Stroke reserve

Slide design	
–	Standard slide
S	Short slide
L	Long slide

Protection against particles	
–	Standard
P0	Without strip cover

Operating instructions	
–	With operating instructions
DN	Without operating instructions

Guide axes ELFA-RF, without drive, with roller bearing guide

Technical data

Function

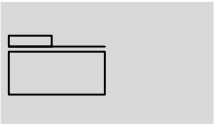

Size
70, 80

Stroke length
50 … 7000 mm

www.festo.com

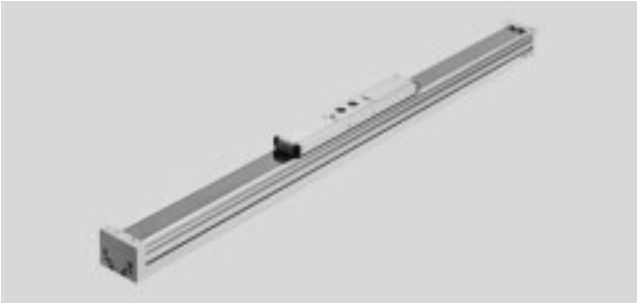

General technical data			
Size		70	80
Design		Guide	
Guide		Roller bearing guide	
Mounting position		Any	
Working stroke			
ELFA-…	[mm]	50 … 7000	50 … 7000
ELFA-…-S	[mm]	50 … 7000	50 … 7000
ELFA-…-L	[mm]	50 … 6900	50 … 6900
Max. no-load resistance to shifting	[N]	25	40
Max. speed	[m/s]	10	10
Max. acceleration	[m/s²]	50	50

Operating and environmental conditions		
Ambient temperature[1]	[°C]	–10 … +60
Degree of protection		
ELFA-…		IP40
ELFA-…-P0		IP00

1) Note operating range of proximity sensors

Weight [kg]		
Size	70	80
Product weight with 0 mm stroke[1]		
ELFA-…	1.92	4.28
ELFA-…-S	1.56	3.67
ELFA-…-L	2.45	5.45
Additional weight per 1000 mm stroke		
ELFA-…	3.05	4.71
ELFA-…-P0	2.96	4.61
Moving mass		
ELFA-…	0.66	1.65
ELFA-…-S	0.56	1.48
ELFA-…-L	0.89	2.16

1) Incl. slide

Guide axes ELFA-RF, without drive, with roller bearing guide

Technical data

Materials

Sectional view

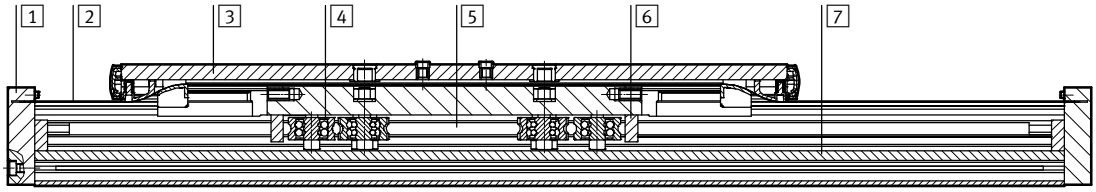

Axis		
1	End cap	Anodised wrought aluminium alloy
2	Cover strip	Stainless steel
3	Slide	Anodised wrought aluminium alloy
4	Guide roller	Hardened rolled steel
5	Guide rod	Hardened tempered steel
6	Wiper ring	Oil-impregnated felt
7	Profile	Anodised wrought aluminium alloy
	Note on materials	RoHS-compliant
		Contains paint-wetting impairment substances

Stroke reserve

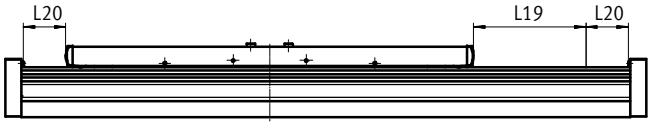

L19 = Nominal stroke
L20 = Stroke reserve

- The stroke reserve is a safety distance which is generally not used as work space
- The sum of the nominal stroke and 2x stroke reserve must not exceed the maximum working stroke
- The stroke reserve length can be freely selected
- The stroke reserve is defined via the “stroke reserve” characteristic in the modular product system.

Example:
Type ELFA-RF-70-500-20H-...

Nominal stroke	= 500 mm
2x stroke reserve	= 40 mm
Working stroke	= 540 mm
(540 mm =	500 mm + 2x 20 mm)

Identical installation length between toothed belt axis ELGA-TB-RF and guide axis ELFA-RF

The different end cap lengths result in different overall lengths despite the nominal stroke and stroke reserve being the same.

To achieve the same overall length between two axes, the compensation dimension L21 must be added to the stroke reserve in the case of the guide axis ELFA-RF.

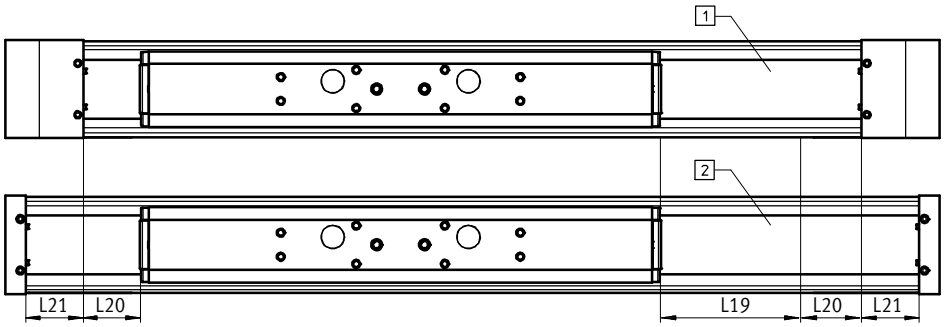

1 ELGA-TB-RF
2 ELFA-RF
L19 = Nominal stroke
L20 = Stroke reserve
L21 = Compensation dimension

Size		70	80
Compensation dimension	[mm]	41.5	48

Characteristic load values

The indicated forces and torques refer to the slide surface. The point of application of force is the point where the centre of the guide and the longitudinal centre of the slide intersect. These values must not be exceeded during dynamic operation. Special attention must be paid to the cushioning phase.

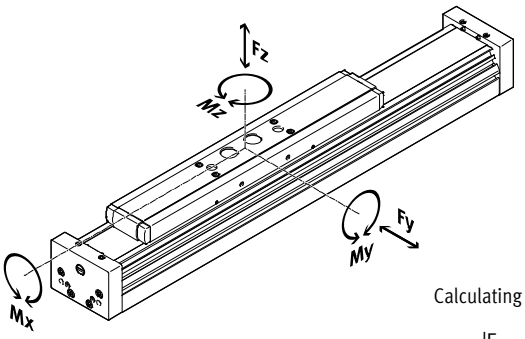

If the axis is subjected to two or more of the indicated forces and torques simultaneously, the following equation must be satisfied in addition to the indicated maximum loads:

Calculating the load comparison factor:

$$f_v = \frac{|F_{y,dyn}|}{F_{y,max}} + \frac{|F_{z,dyn}|}{F_{z,max}} + \frac{|M_{x,dyn}|}{M_{x,max}} + \frac{|M_{y,dyn}|}{M_{y,max}} + \frac{|M_{z,dyn}|}{M_{z,max}} \leq 1$$

Permissible forces and torques for a service life of 10000 km		
Size	70	80
$Fy_{max.}$	500	800
$Fz_{max.}$	500	800
$Mx_{max.}$	11	30
$My_{max.}$		
ELFA-...	20	90
ELFA-...-S	20	90
ELFA-...-L	40	180
$Mz_{max.}$		
ELFA-...	20	90
ELFA-...-S	20	90
ELFA-...-L	40	180

Calculating the service life

The service life of the guide depends on the load. To provide a rough indication of the service life of the guide, the graph below plots the load comparison factor f_v against the service life.

These values are only theoretical. You must consult your local contact person at Festo for load comparison factors f_v greater than 1.5.

Load comparison factor f_v as a function of service life

Example:
A user wants to move an X kg load. Using the formula ➔ page 25 gives a value of 1.5 for the load comparison factor f_v. According to the graph, the guide would have a service life of approx. 3000 km. Reducing the acceleration reduces the Mz and My values. A load comparison factor f_v of 1 now gives a service life of 10000 km.

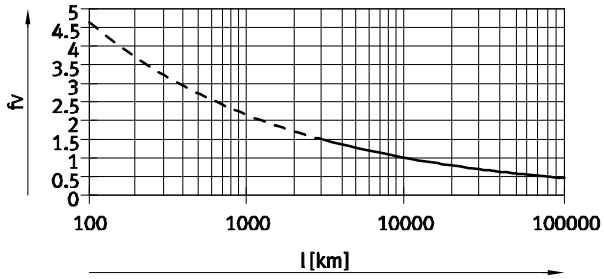

Note

PositioningDrives engineering software www.festo.com

The software can be used to calculate a guide workload for a service life of 10000 km.

$f_v > 1.5$ are only theoretical comparison values for the roller bearing guide.

Second moment of area

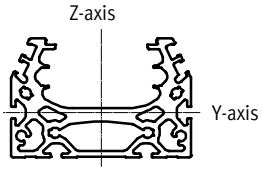

Size		70	80
Iy	[mm^4]	1.39x10^5	2.70x10^5
Iz	[mm^4]	4.33x10^5	1.02x10^6

Maximum permissible support span L (without profile mounting MUE/central support EAHF) as a function of force F

In order to limit deflection in the case of large strokes, the axis may need to be supported.

The following graphs can be used to determine the maximum permissible support span L as a function of force F acting on the axis. The deflection is f = 0.5 mm.

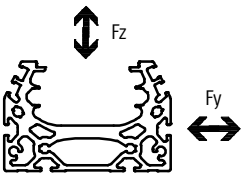

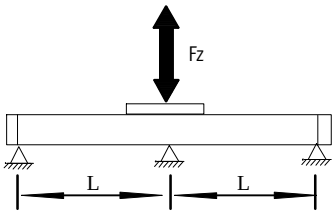

Force Fy

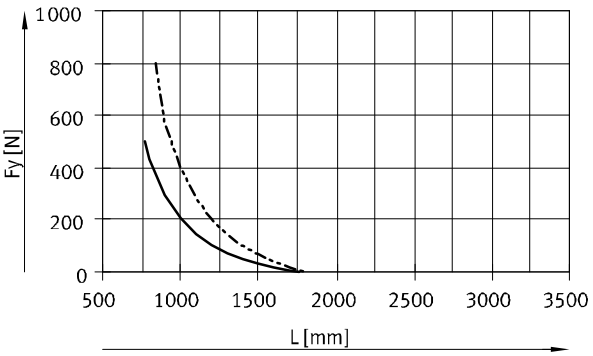

Force Fz

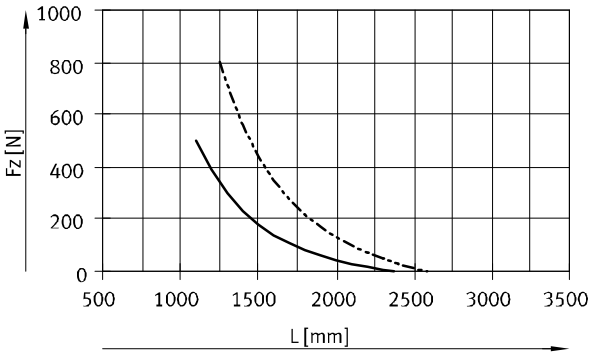

ELFA-RF-70
ELFA-RF-80

Recommended deflection limits

Adherence to the following deflection limits is recommended so as not to impair the functional performance of the axes. Greater deformation can result in increased friction, greater wear and reduced service life.

Size	Dyn. deflection (moving load)	Stat. deflection (stationary load)
70, 80	0.05% of the axis length, max. 0.5 mm	0.1% of the axis length

Guide axes ELFA-RF, without drive, with roller bearing guide

Technical data

Dimensions Download CAD data ➔ **www.festo.com**

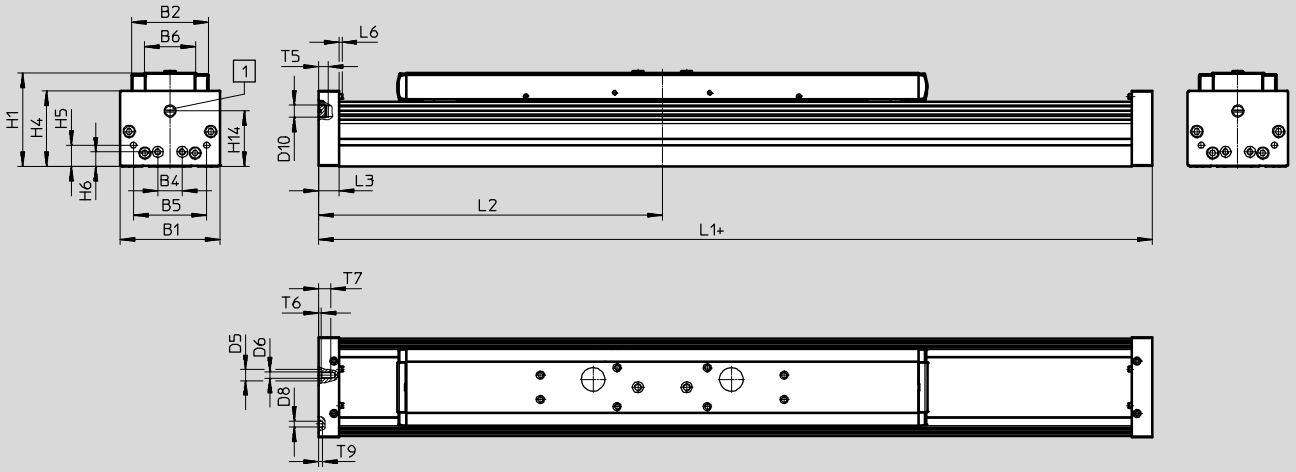

\+ = plus stroke length + 2 x stroke reserve

1 Sealing air connection

Size	B1	B2	B4	B5	B6	D5 ∅ H7	D6	D8 ∅ H7	D10	H1
70	69	48.2	30	45	30	–	M5	5	G⅛	64
80	82	63.2	20	60	42	9	M5	5	G⅛	76.5

Size	H4	H5	H6	H14	L3	L6	T5	T6	T7	T9
70	50.5	13	13	37.5	16	2.3	8	–	10	3.1
80	62	17.5	12	45.5	17	2.3	8	2.1	10.1	3.1

Size	L1			L2		
	ELFA-...			ELFA-...		
		-S	-L		-S	-L
				Min.	Min.	Min.
70	337	259	437	168.5	129.5	218.5
80	484	400	624	242	200	312

Dimensions Download CAD data ➔ **www.festo.com**

Profile

Size 70

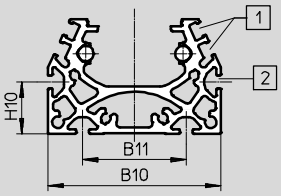

Size 80

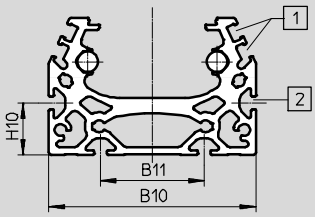

1 Sensor slot for proximity sensor
2 Mounting slot for slot nut

Size	B10	B11	H10
70	67	40	20
80	80	40	20

Note

Requirements for the flatness of the bearing surface and of attachments as well as for use in parallel structures
➔ www.festo.com/sp
User documentation

Dimensions Download CAD data ➔ **www.festo.com**

ELFA-... – Standard slide

Size 70

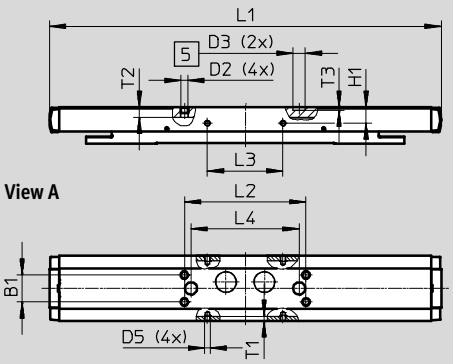

Size 80

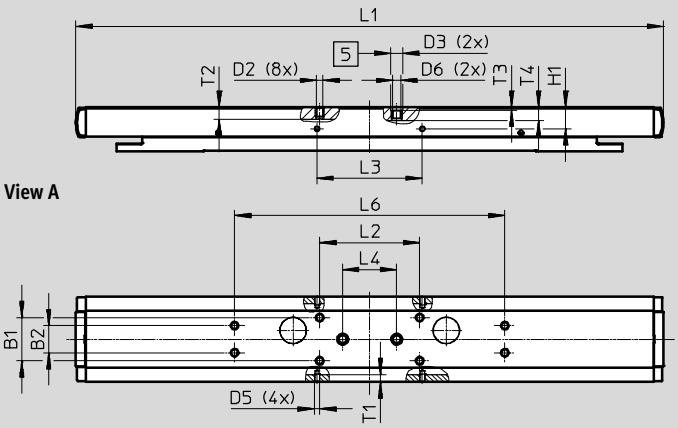

5 Hole for centring sleeve

Size	B1 ±0.1	B2 ±0.1	D2	D3 ∅ H7	D5	D6	H1 ±0.1	L1
70	20	–	M5	9	M4	–	11.7	290
80	32	20	M5	9	M4	M6	16	435

Size	L2 ±0.2	L3 ±0.1	L4 ±0.03	L6 ±0.2	T1	T2	T3	T4
70	90	56	80	–	3.5	7.5	2.1	–
80	74	78	40	200	5.1	9	2.1	9.7

Dimensions Download CAD data ➔ **www.festo.com**

ELFA-...-S – Short slide

Size 70

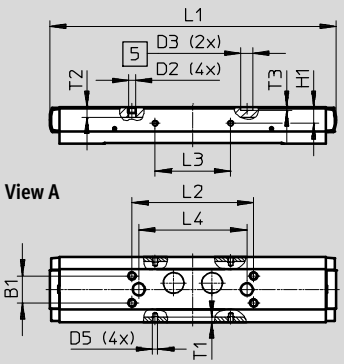

Size 80

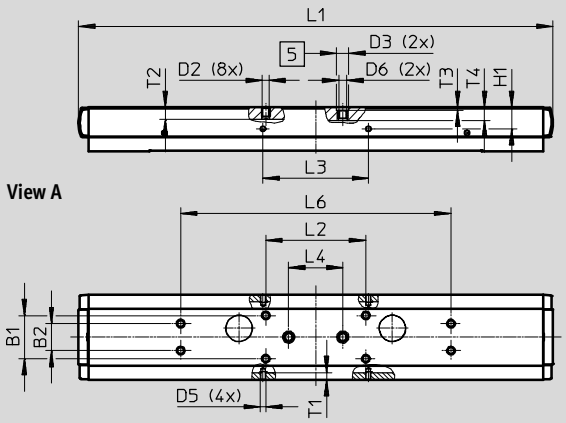

5 Hole for centring sleeve

Size	B1 ±0.1	B2 ±0.1	D2	D3 ∅ H7	D5	D6	H1 ±0.1	L1
70	20	–	M5	9	M4	–	11.7	212
80	32	20	M5	9	M4	M6	16	351

Size	L2 ±0.2	L3 ±0.1	L4 ±0.03	L6 ±0.2	T1	T2	T3	T4
70	90	56	80	–	3.5	7.5	2.1	–
80	74	78	40	200	5.1	9	2.1	9.7

Dimensions Download CAD data ➔ **www.festo.com**

ELFA-...-L – Long slide

Size 70

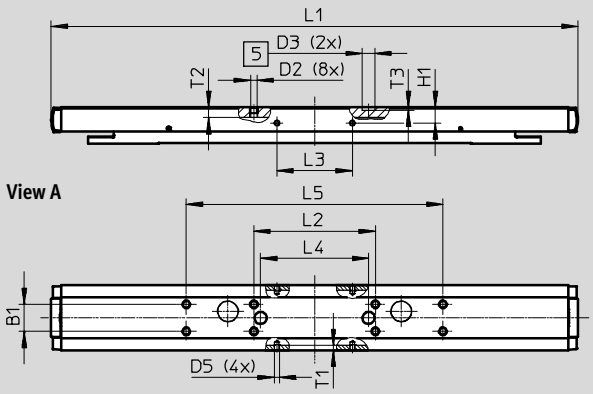

Size 80

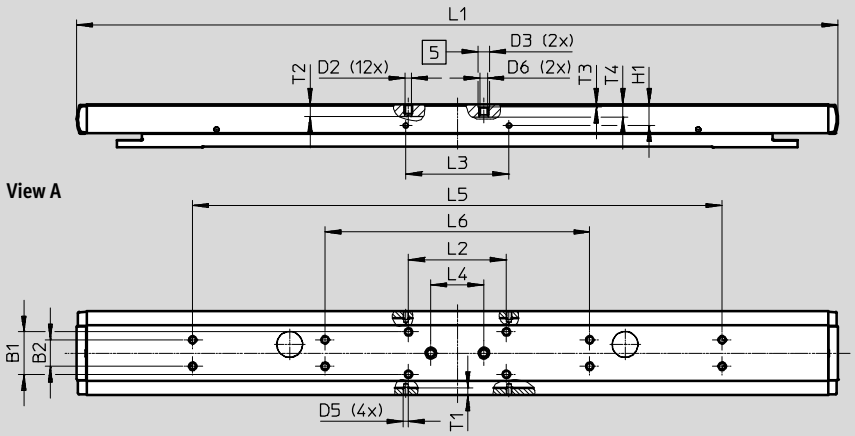

5 Hole for centring sleeve

Size	B1 ±0.1	B2 ±0.1	D2	D3 ∅ H7	D5
70	20	–	M5	9	M4
80	32	20	M5	9	M4

Size	D6	H1 ±0.1	L1	L2 ±0.2	L3 ±0.1	L4 ±0.03
70	–	11.7	390	90	56	80
80	M6	16	575	74	78	40

Size	L5 ±0.2	L6 ±0.2	T1	T2	T3	T4
70	190	–	3.5	7.5	2.1	–
80	400	200	5.1	9	2.1	9.7

Guide axes ELFA-RF, without drive, with roller bearing guide

Ordering data – Modular product system

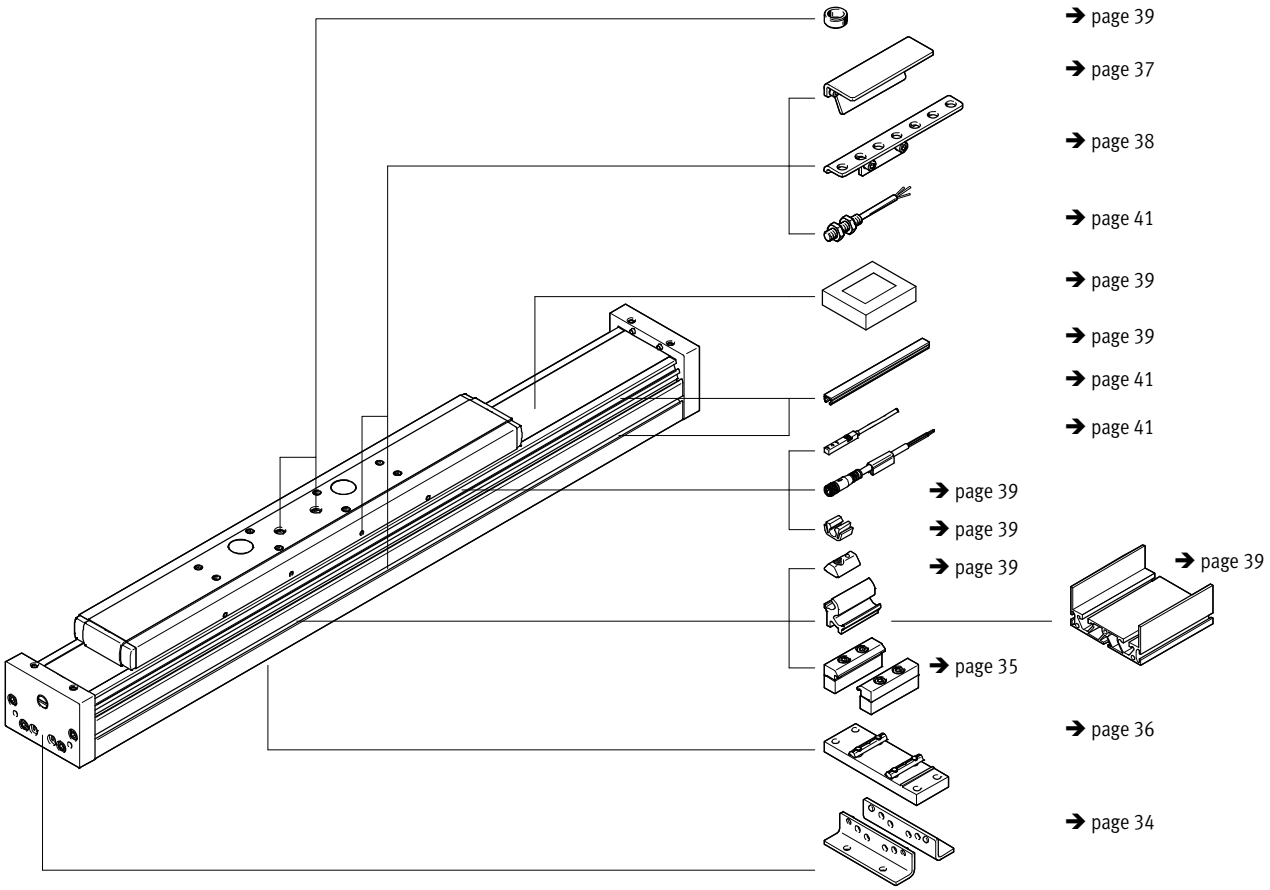

Guide axes ELFA-RF, without drive, with roller bearing guide

Ordering data – Modular products

Ordering table							
Size		70	80	Condi-tions	Code		Entry code
M	Module no.	**8037967**	**8037968**				
	Design	Guide axis			**ELFA**		ELFA
	Guide	Roller bearing guide			**-RF**		-RF
	Size [mm]	70	80		**-...**		-...
	Stroke length [mm]	50 ... 7000			**-...**		-...
	Stroke reserve [mm]	0 ... 999 (0 = no stroke reserve)		1	**-...H**		
O	Slide design	Standard slide 50 ... 7000					
		Short slide 50 ... 7000		2	**-S**		
		Long slide 50 ... 6900			**-L**		
	Protection against particles	Standard					
		Without strip cover			**-P0**		
	Operating instructions	With operating instructions					
		Without operating instructions			**-DN**		

1 ... The sum of the nominal stroke and 2x stroke reserve must be at least 50 mm and must not exceed the maximum stroke length.

2 **S** Only with PO.

M Mandatory data

O Options

Transfer order code

		ELFA	–	**RF**	–		–		–		–		–		–		

Guide axes ELFA, without drive

Accessories

Foot mounting HPE

Materials:

Galvanised steel

RoHS-compliant

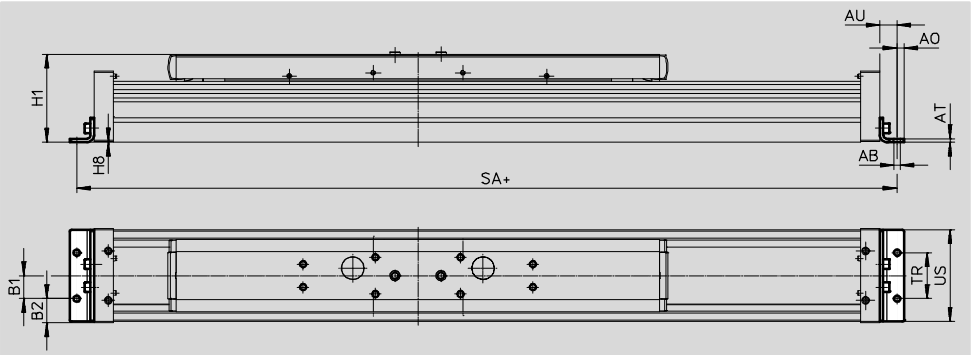

+ = plus stroke length + 2 x stroke reserve

Dimensions and ordering data

For size	AB ∅	A0	AT	AU	B1	B2	H1
70	5.5	6	3	13	20	14.5	64
80	5.5	6	3	15	20	21	76.5
120	9	8	6	22	40	20	111.5

For size	H8	SA	TR	US
70	0.5	289	40	67
80	0.5	320	40	80
120	0.5	440	80	116

For size	Weight [g]	Part No.	Type
70	115	**558321**	**HPE-70**
80	150	**558322**	**HPE-80**
120	578	**558323**	**HPE-120**

Profile mounting MUE
Materials:
Anodised aluminium
RoHS-compliant

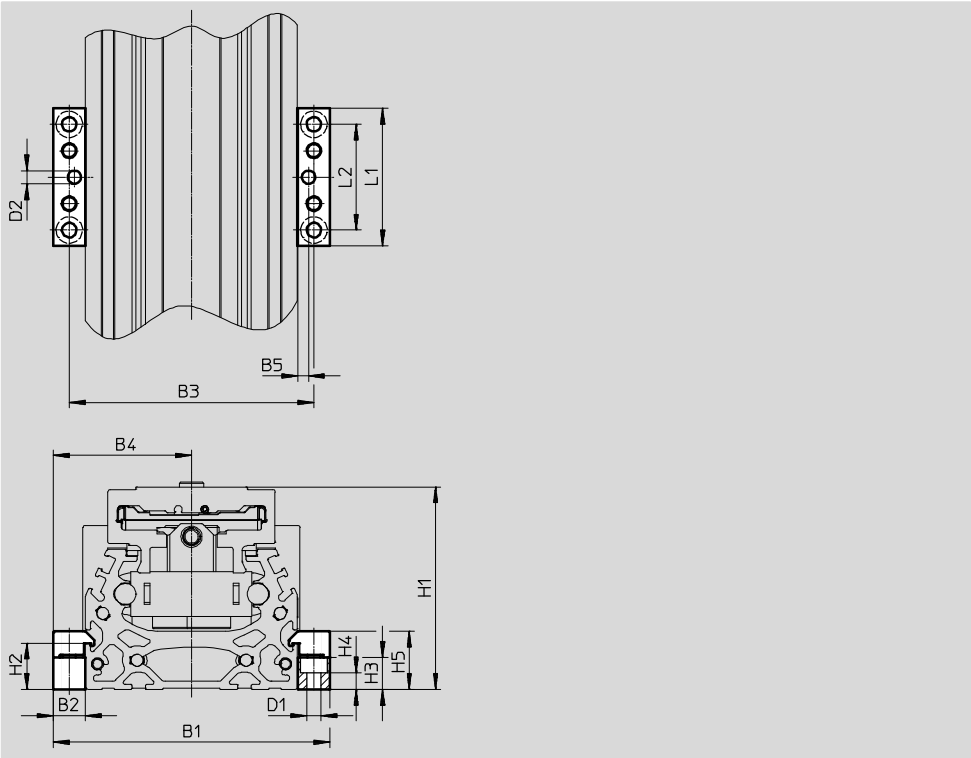

Dimensions and ordering data									
For size	B1	B2	B3	B4	B5	D1 ∅	D2 ∅ H7	H1	H2
70	91	12	79	39.5	4	5.5	5	64	17.5
80	104	12	92	46	4	5.5	5	76.5	17.5
120	154	19	135	67.5	4	9	5	111.5	16

For size	H3	H4	H5	L1	L2	Weight [g]	Part No.	Type
70	12	6.2	22	52	40	80	**558043**	**MUE-70/80**
80	12	6.2	22	52	40	80	**558043**	**MUE-70/80**
120	14	5.5	29.5	90	40	290	**558044**	**MUE-120/185**

Central support EAHF
Materials:
Anodised aluminium
RoHS-compliant

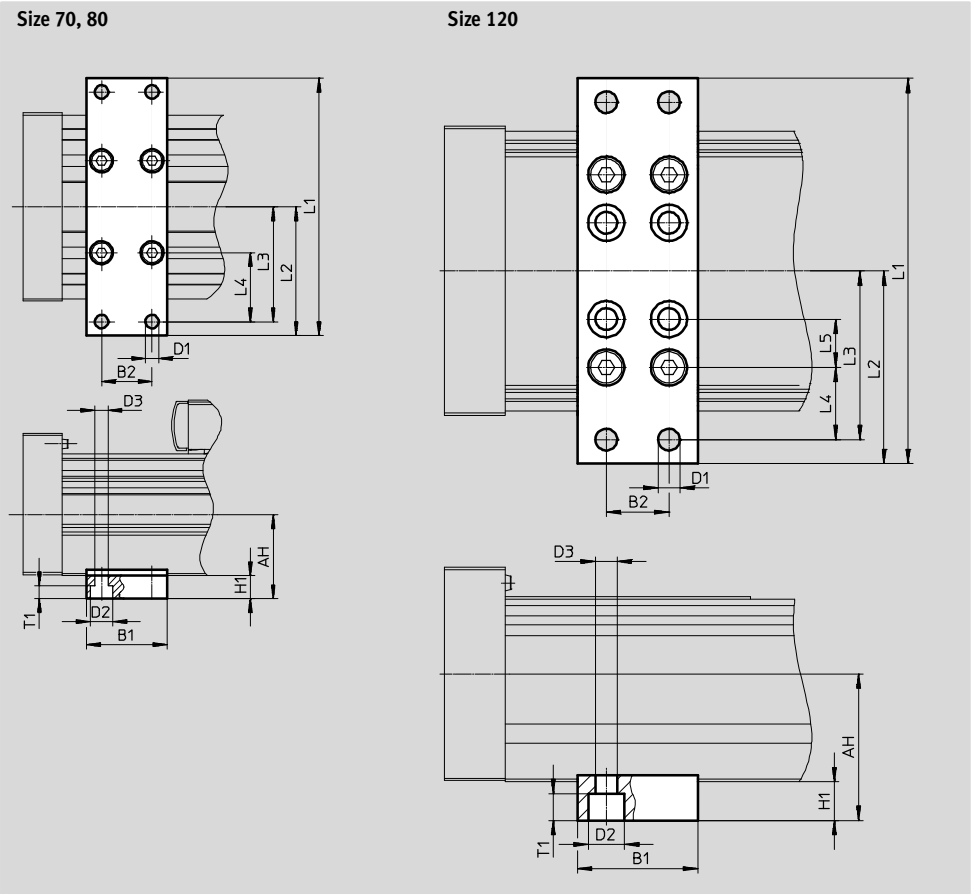

Dimensions and ordering data								
For size	AH	B1	B2	D1 ∅	D2 ∅	D3 ∅	H1	L1
70	32.2	35	22	5.8	10	5.8	10	102
80	36.5							112
120	74.6	50	26	9	15	9	16	160

For size	L2	L3	L4	L5	T1	Weight [g]	Part No.	Type
70	51	45	25	–	5.7	113	**2349256**	**EAHF-L5-70-P**
80	56	50	30			123	**3535188**	**EAHF-L5-80-P**
120	80	70	30	20	11	384	**2410274**	**EAHF-L5-120-P**

Switch lug SF-EGC-1
For sensing via proximity sensor
SIES-8M

Materials:
Galvanised steel
RoHS-compliant

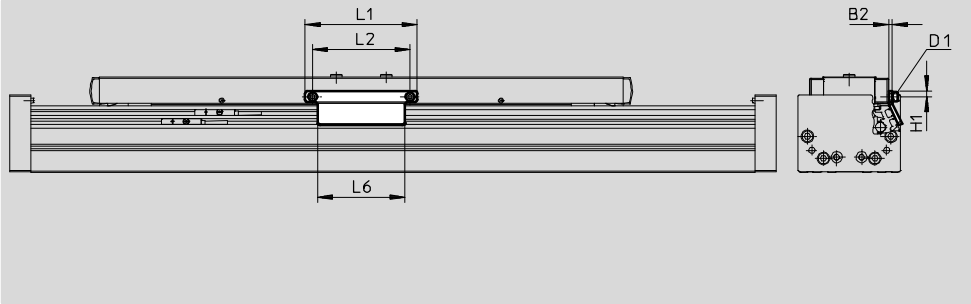

Dimensions and ordering data									
For size	B2	D1	H1	L1	L2	L6	Weight [g]	Part No.	Type
70	3	M4	4.65	70	56	50	50	**558047**	**SF-EGC-1-70**
80	3	M4	4.65	90	78	70	60	**558048**	**SF-EGC-1-80**
120	3	M5	8	170	140	170	147	**558049**	**SF-EGC-1-120**

Switch lug SF-EGC-2
For sensing via proximity sensor SIEN-M8B/SIES-8M

Material:
Galvanised steel
RoHS-compliant

Sensor bracket HWS-EGC
For proximity sensor SIEN-M8B

Materials:
Galvanised steel
RoHS-compliant

Switch lug SF-EGC-2

Sensor bracket HWS-EGC

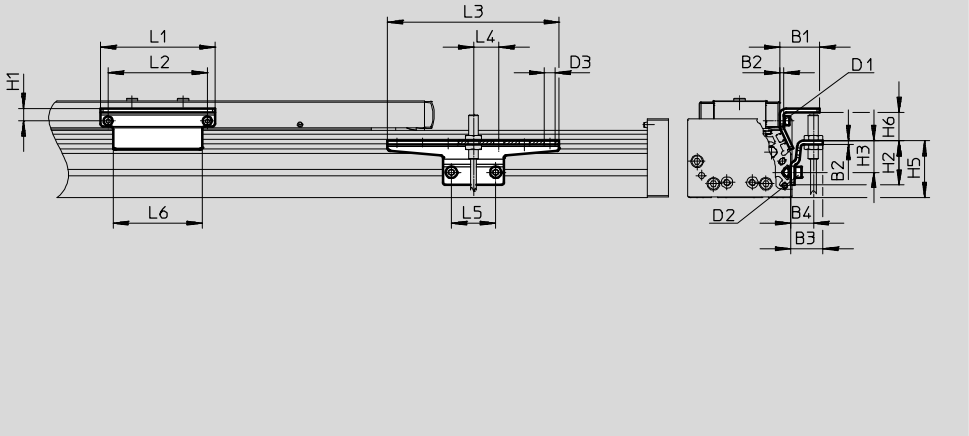

Dimensions and ordering data									
For size	B1	B2	B3	B4	D1	D2	D3 ∅	H1	H2
70	31.5	3	25.5	18	M4	M5	8.4	9.5	35
80	31.5	3	25.5	18	M4	M5	8.4	9.5	35
120	32	3	25.5	18	M5	M5	8.4	13.2	65

For size	H3	H5	H6 Max.	L1	L2	L3	L4	L5	L6
70	25	45	13.5	70	56	135	20	35	50
80	25	45	23.5	90	78	135	20	35	70
120	55	75	24	170	140	215	20	35	170

For size	Weight [g]	Part No.	Type
	Switch lug		
70	100	**558052**	**SF-EGC-2-70**
80	130	**558053**	**SF-EGC-2-80**
120	277	**558054**	**SF-EGC-2-120**

For size	Weight [g]	Part No.	Type
	Sensor bracket		
70	110	**558057**	**HWS-EGC-M5**
80	110	**558057**	**HWS-EGC-M5**
120	217	**570365**	**HWS-EGC-M8-B**

Ordering data					
	For size	Comments	Part No.	Type	PU[1]
Slot nut NST					
	70, 80	For mounting slot	**150914**	**NST-5-M5**	1
			8047843	**NST-5-M5-10**	10
			8047878	**NST-5-M5-50**	50
	120		**150915**	**NST-8-M6**	1
			8047868	**NST-8-M6-10**	10
			8047869	**NST-8-M6-50**	50
Centring pin ZBS/centring sleeve ZBH					
	70	For slide	**150928**	**ZBS-5**	10
	70, 80, 120		**150927**	**ZBH-9**	
Slot cover ABP					
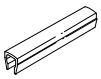	70, 80	• For mounting slot • Every 0.5 m	**151681**	**ABP-5**	2
	120		**151682**	**ABP-8**	
Slot cover ABP-S					
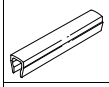	70, 80, 120	• For sensor slot • Every 0.5 m	**563360**	**ABP-5-S1**	2
Clip SMBK					
	70, 80, 120	For sensor slot, for attaching the proximity sensor cables	**534254**	**SMBK-8**	10
Clamping component EADT					
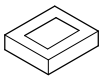	70, 80	Tool for retensioning the cover strip	**8058451**	**EADT-S-L5-70**	1
	120		**8058450**	**EADT-S-L5-120**	

1) Packaging unit

Mounting options between axis and support profile

Depending on the adapter kit, the spacing between the axis and the support profile is:
x = 20 mm or 50 mm

The support profile must be mounted using at least 2 adapter kits. For longer strokes, an adapter kit must be used every 500 mm.

Example:

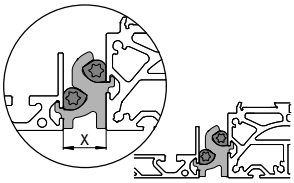

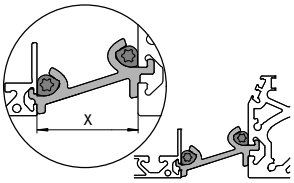

Ordering data					
	For size	Comments	Part No.	Type	PU[1]
Adapter kit DHAM					
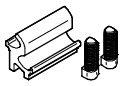	80	• For mounting the support profile on the axis • Spacing between axis and profile is 20 mm	**562241**	**DHAM-ME-N1-CL**	1
	120		**562242**	**DHAM-ME-N2-CL**	
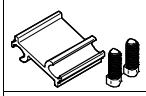	70, 80	• For mounting the support profile on the axis • Spacing between axis and profile is 50 mm	**574560**	**DHAM-ME-N1-50-CL**	1
	120		**574561**	**DHAM-ME-N2-50-CL**	
Support profile HMIA					
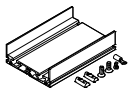	70, 80, 120	For guiding an energy chain	**539379**	**HMIA-E07-**	1

1) Packaging unit

Ordering data – Proximity sensor for T-slot, inductive Technical data ➔ Internet: sies

	Type of mounting	Electrical connection	Switching output	Cable length [m]	Part No.	Type
N/O contact						
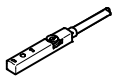	Insertable in the slot from above, flush with the cylinder profile	Cable, 3-wire	PNP	7.5	**551386**	**SIES-8M-PS-24V-K-7,5-OE**
		Plug M8x1, 3-pin		0.3	**551387**	**SIES-8M-PS-24V-K-0,3-M8D**
		Cable, 3-wire	NPN	7.5	**551396**	**SIES-8M-NS-24V-K-7,5-OE**
		Plug M8x1, 3-pin		0.3	**551397**	**SIES-8M-NS-24V-K-0,3-M8D**
N/C contact						
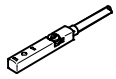	Insertable in the slot from above, flush with the cylinder profile	Cable, 3-wire	PNP	7.5	**551391**	**SIES-8M-PO-24V-K-7,5-OE**
		Plug M8x1, 3-pin		0.3	**551392**	**SIES-8M-PO-24V-K-0,3-M8D**
		Cable, 3-wire	NPN	7.5	**551401**	**SIES-8M-NO-24V-K-7,5-OE**
		Plug M8x1, 3-pin		0.3	**551402**	**SIES-8M-NO-24V-K-0,3-M8D**

Ordering data – Proximity sensor M8 (round design), inductive Technical data ➔ Internet: sien

	Electrical connection	LED	Switching output	Cable length [m]	Part No.	Type
N/O contact						
	Cable, 3-wire	■	PNP	2.5	**150386**	**SIEN-M8B-PS-K-L**
	Plug M8x1, 3-pin	■	PNP	–	**150387**	**SIEN-M8B-PS-S-L**
N/C contact						
	Cable, 3-wire	■	PNP	2.5	**150390**	**SIEN-M8B-PO-K-L**
	Plug M8x1, 3-pin	■	PNP	–	**150391**	**SIEN-M8B-PO-S-L**

Ordering data – Connecting cables Technical data ➔ Internet: nebu

	Electrical connection, left	Electrical connection, right	Cable length [m]	Part No.	Type
	Straight socket, M8x1, 3-pin	Cable, open end, 3-wire	2.5	**159420**	**SIM-M8-3GD-2,5-PU**
			2.5	**541333**	**NEBU-M8G3-K-2.5-LE3**
			5	**541334**	**NEBU-M8G3-K-5-LE3**
	Angled socket, M8x1, 3-pin	Cable, open end, 3-wire	2.5	**541338**	**NEBU-M8W3-K-2.5-LE3**
			5	**541341**	**NEBU-M8W3-K-5-LE3**