Solenoid valves MHJ, fast-switching valves

FESTO

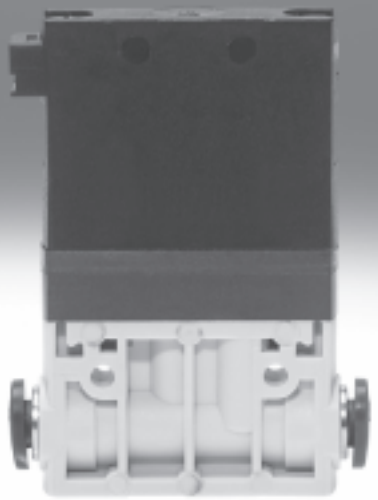

Solenoid valves MHJ, fast-switching valves

Key features

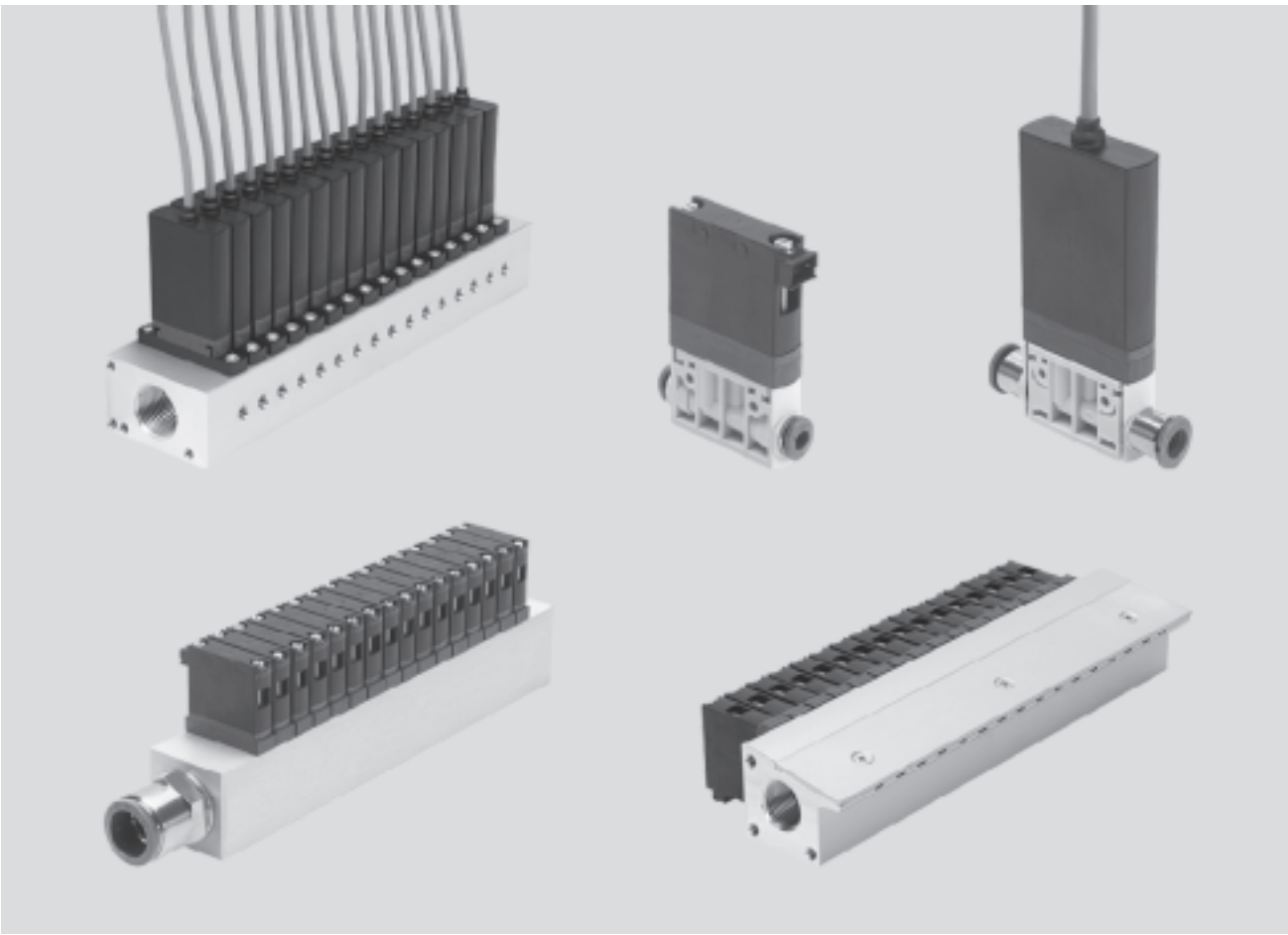

Innovative

- Individual electrical connection via connecting cable and square plug sockets with integrated control electronics for MHJ9 or via moulded-in cable for MHJ10, control electronics are contained in the valve
- Manifold rail with air nozzle outlet for MHJ9
- Switching times of less than one millisecond
- Signal control range 3 ... 30 V DC

Versatile

- Modular system offering a range of configuration options
- Identical basic valves for individual valve and manifold assembly
- Flexible air supply with air connection at both ends on the manifold rails
- Actuation of the MHJ9 valves without plug socket with cable MHJ9-KMH subject to consultation with Festo

Reliable

- Reliability of service thanks to valves that can be replaced quickly and easily
- No electrical plug connectors with MHJ10 thanks to integrated control electronics
- Up to 5 billion switching cycles

Easy to mount

- Solid wall mounting or H-rail mounting of the connecting cables with MHJ9
- Manifold rail for MHJ9 with connecting cable block on H-rail can be mounted directly in the application

Solenoid valves MHJ, fast-switching valves

Key features

MHJ9

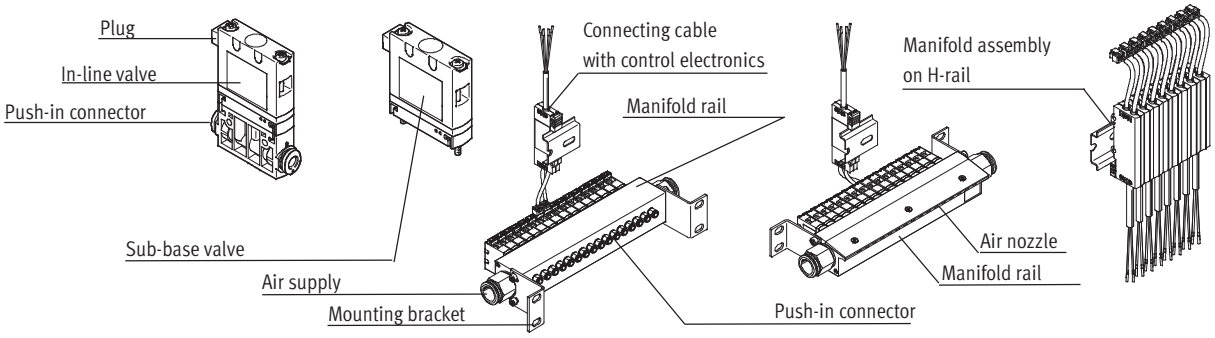

In-line valve

- Integrated push-in connector
- Electrical connection IP40
- Modular design

Valve manifold with individual outputs

- Air supply at both ends
- Mounting bracket assembly in 4 directions
- Stable manifold rail

Valve manifold with air nozzles

- Air supply at both ends
- Mounting bracket assembly in 2 directions
- Accessible air ducts

Connecting cable with control electronics for two valves

- Individual mounting or on H-rail

MHJ10

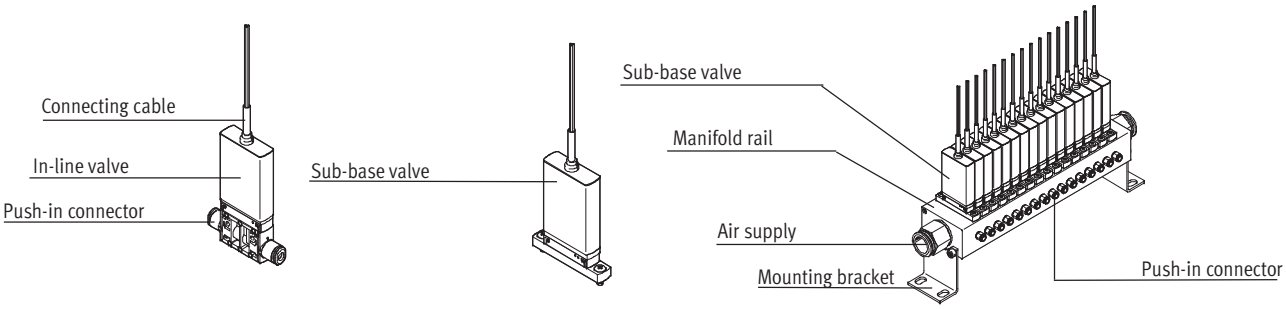

In-line valve

- Integrated push-in connector
- Electrical connection with moulded-in connecting cable, IP65
- Modular design

Valve manifold with individual outputs

- Air supply at both ends
- Stable manifold rail
- Mounting bracket assembly in 2 directions

Integrated control electronics

- Compact design
- Quick installation

Solenoid valves MHJ, fast-switching valves

Product range overview

Function	Design	Operating voltage [V DC]	Type	Electrical connection	Switching time[1] Off	Switching time[1] On	➔ Page/ Internet
2/2-way valve 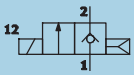	**LF = Standard nominal flow rate 50 l/min**						
	In-line valve	12 … 53	MHJ9	Plug	0.9	0.7	8
		24	MHJ10	With moulded-in cable	1	0.8	16
	Sub-base valve	12 … 53	MHJ9	Plug	0.9	0.7	8
		24	MHJ10	With moulded-in cable	1	0.8	16
	MF = Standard nominal flow rate 100 l/min						
	In-line valve	12 … 53	MHJ9	Plug	0.4	0.8	8
		24	MHJ10	With moulded-in cable	0.4	0.8	16
	Sub-base valve	12 … 53	MHJ9	Plug	0.4	0.8	8
		24	MHJ10	With moulded-in cable	0.4	0.8	16
	HF = Standard nominal flow rate 160 l/min						
	In-line valve	12 … 53	MHJ9	Plug	0.5	1	8
		24	MHJ10	With moulded-in cable	0.6	1.2	16
	Sub-base valve	12 … 53	MHJ9	Plug	0.5	1	8
		24	MHJ10	With moulded-in cable	0.6	1.2	16
	HF/LP = Standard nominal flow rate 160 l/min						
	In-line valve	12 … 53	MHJ9	Plug	0.4	1	8
		24	MHJ10	With moulded-in cable	0.5	1	16
	Sub-base valve	12 … 53	MHJ9	Plug	0.4	1	8
		24	MHJ10	With moulded-in cable	0.5	1	16

1) Switching time at 24 V DC and 4 bar

Mounting options			
Design		In-line valve	Sub-base valve
MHJ9 with plug			
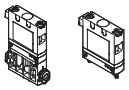	Direct mounting	■	–
	Manifold assembly	–	■
MHJ10 with moulded-in cable			
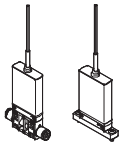	Direct mounting	■	–
	Manifold assembly	–	■

Solenoid valves MHJ, fast-switching valves

Type codes

MHJ	10	–	S	–	2,5	–	QS-4	–	MF

Valve series	
MHJ	Fast-switching valves

Width	
9	9 mm
10	10 mm

Control electronics	
–	Without integrated control electronics (only with MHJ9)
S	With integrated control electronics (only with MHJ10)

Cable length for MHJ10	
0,35	0.35 m
2,5	2.5 m

Push-in connector for in-line valves	
–	Sub-base valves
QS-4	Push-in connector for tubing O.D. 4 mm
QS-6	Push-in connector for tubing O.D. 6 mm

Flow class	
LF	Low flow (50 l/min)
MF	Mid flow (100 l/min)
HF	High flow (160 l/min)
HF/LP	High flow/low pressure (160 l/min, 0.5 … 4 bar)

Solenoid valves MHJ9, fast-switching valves

Peripherals overview

Valve manifold design

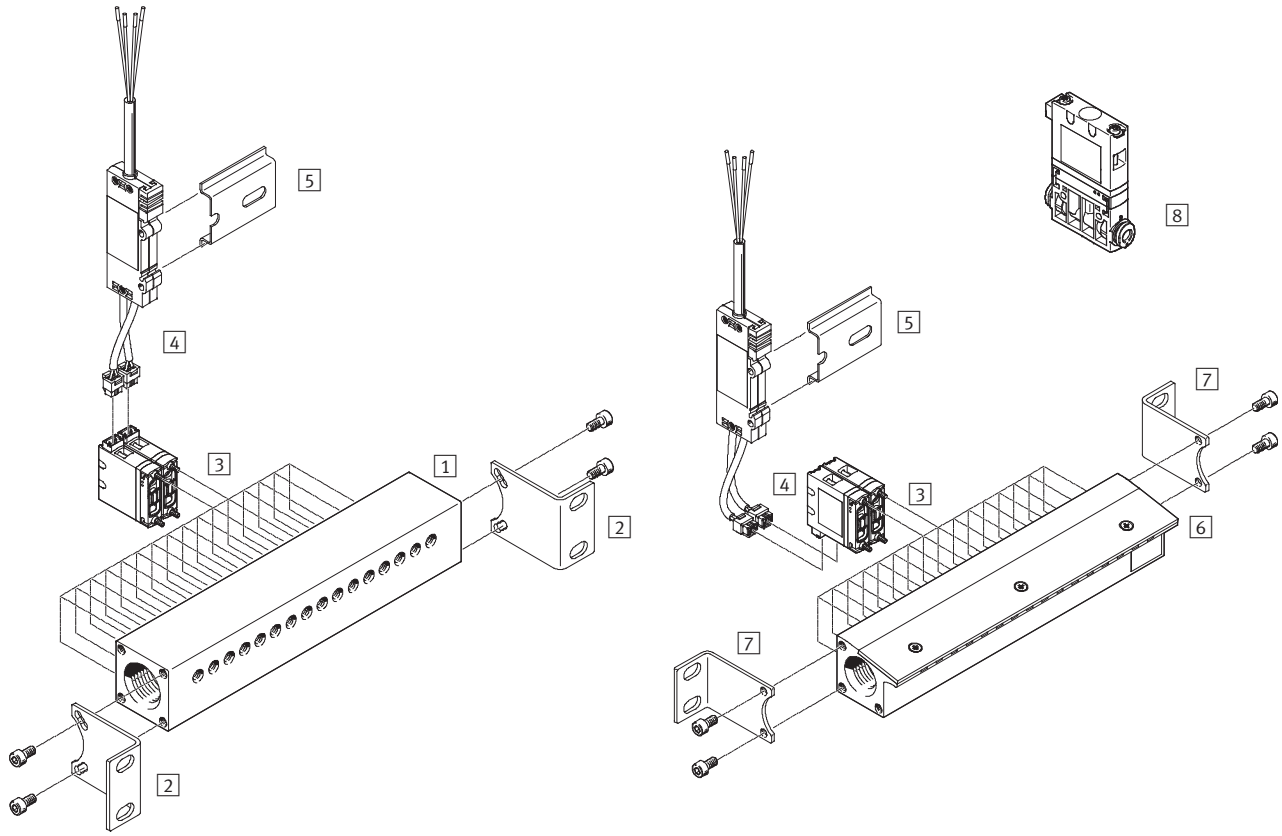

		Type	Brief description	➔ Page/Internet
1	Manifold rail	MHJ9-P16	With 16 valve positions	23
2	Mounting kit	MHJ-HW1	Consisting of 2 mounting brackets and 4 socket head screws	23
3	Sub-base valve	MHJ9	2/2-way solenoid valve	22
4	Connecting cable	MHJ9-KMH	With control electronics for 2 solenoid valves	22
5	H-rail	NRH-35-2000	2 m long	22
6	Manifold rail	MHJ9-PN16	With 16 valve positions	23
7	Mounting kit	MHJ-HW2	Consisting of 2 mounting brackets and 4 socket head screws	23
8	In-line valve	MHJ9	2/2-way solenoid valve	22

Valve manifold with accessories

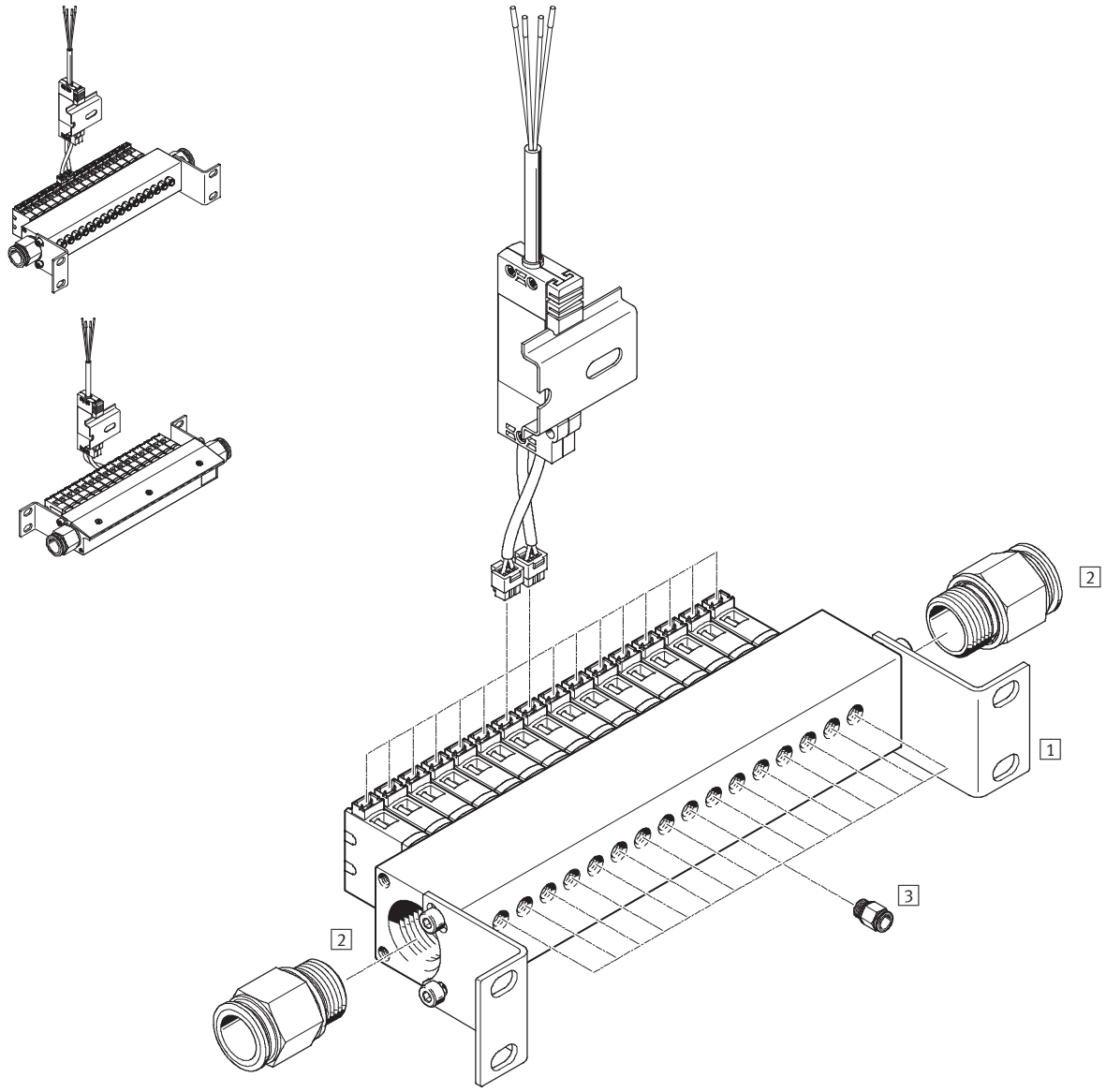

		Type	Brief description	➔ Page/Internet
1	Manifold rail	MHJ9-P16	With mounting kit MHJ-HW1	23
2	Push-in fitting	QS	For air supply 1	23
3	Push-in fitting	QS	For valve output 2	23

Solenoid valves MHJ9, fast-switching valves

Technical data

Function

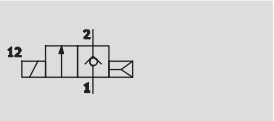

Width

9 mm

Temperature range

−5 ... +60 °C

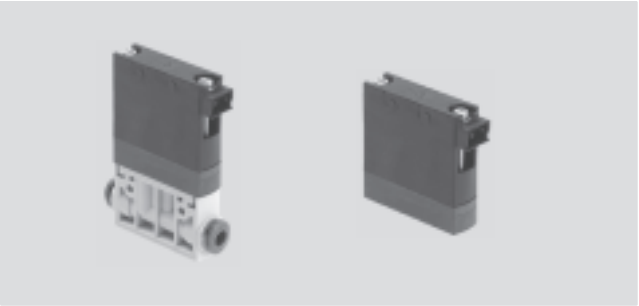

General technical data									
Type		In-line valve MHJ9-QS				Sub-base valve MHJ9			
		LF	MF	HF	HF/LP	LF	MF	HF	HF/LP
Valve function		2/2-way valve, single solenoid, closed							
Design		Poppet valve without mechanical spring return							
Sealing principle		Hard							
Note on operation		Do not operate without flow rate							
Service life in billions of switching cycles[1]		5	5	0.5	0.5	5	5	0.5	0.5
Actuation type		Electric							
Reset method		Pneumatic spring							
Type of control		Direct							
Direction of flow		Non-reversible							
Mounting position		Any							
Width	[mm]	9[2]							
Grid dimension	[mm]	9.5							
Standard nominal flow rate[3]	[l/min]	50	100	160	160	50	100	160	160
C value	[l/sbar]	0.2	0.4	0.66	0.66	0.2	0.4	0.66	0.66
b value		0.5	0.38	0.36	0.36	0.5	0.38	0.36	0.36
Type of mounting		In-line installation or via through-holes				On sub-base			
Pneumatic connection 1 and 2		QS4	QS4	QS6	QS6	Sub-base M7			
Product weight	[g]	30				25			
Max. tightening torque of valve mounting	[Nm]	–				0.28			

1) The long service life of the valves can only be achieved with the "hard" sealing principle, which, however, results in minor leakage when the valve is closed.
2) Min. permissible grid dimension 9.5 mm
3) The specified flow rate refers to the valve without sub-base. The maximum flow rate that can be achieved may deviate from the specified value when the valve is mounted on a sub-base.

Operating and environmental conditions						
Type			LF	MF	HF	HF/LP
Operating medium			Compressed air in accordance with ISO 8573-1:2010 [7:4:4]			
Note on operating/pilot medium			Operation with lubricated medium not possible			
Operating pressure		[bar]	+0.5 ... +8	+0.5 ... +6	+0.5 ... +6	+0.5 ... +4
Ambient temperature		[°C]	−5 ... +60			
	With manifold assembly	[°C]	Max. +45	Max. +45	–	Max. +45
Temperature of medium		[°C]	−5 ... +60			
Storage temperature		[°C]	−20 ... +50			
Corrosion resistance class CRC			2[1]			
Note on materials			RoHS-compliant			

1) Corrosion resistance class 2 according to Festo standard 940 070
Components subject to moderate corrosion stress. Externally visible parts with primarily decorative surface requirements which are in direct contact with a normal industrial environment or media such as coolants or lubricating agents.

Electrical data in combination with connecting cable MHJ9-KMH						
Type			LF	MF	HF	HF/LP
Operating voltage range[1]		[V DC]	12 … 53			
Duty cycle[2]		[%]	100	100	–	100
Operating conditions to DIN VDE 0580[2]	With individual valve		–	–	S3 50% 20 min	–
	With manifold assembly		–	–	S3 15% 20 min	–
Electrical connection			2-pin, plug KMH			
Protection class to EN 60529			IP40			

1) If there is a current limit, during the switching operation it must be set to at least 1.7 A for LF, MF and HF/LP valves and to at least 1.85 A for HF valves.
2) Air must flow through the valve continuously.

Note

The specified values apply exclusively when using the connecting cable MHJ9-KMH.

Ask your technical consultant about other actuation options for the MHJ valves.

Switching times[1] and frequencies						
Type			LF	MF	HF	HF/LP
Maximum switching frequency		[Hz]	500	1,000	500	500
Switching times at 12 V DC						
Pressure 4 bar	Switching time on	[ms]	1	1.1	1.4	1.3
	Switching time off	[ms]	0.9	0.4	0.6	0.5
Switching times at 24 V DC						
Pressure 0.5 bar	Switching time on	[ms]	0.7	0.7	0.9	0.8
	Switching time off	[ms]	0.9	0.5	0.7	0.5
Pressure 4 bar	Switching time on	[ms]	0.7	0.8	1	1
	Switching time off	[ms]	0.9	0.4	0.5	0.4
Pressure 6 bar	Switching time on	[ms]	–	0.9	1.3	–
	Switching time off	[ms]	–	0.4	0.5	–
Pressure 8 bar	Switching time on	[ms]	0.8	–	–	–
	Switching time off	[ms]	0.9	–	–	–
Switching times at 48 V DC						
Pressure 4 bar	Switching time on	[ms]	0.6	0.6	0.8	0.8
	Switching time off	[ms]	0.8	0.4	0.4	0.4

1) Tolerance ±15%

Note

The maximum switching frequency that can be achieved decreases as the temperature of the valve increases or as the operating and ambient temperature increases.

The ambient temperature must therefore be limited accordingly so that the maximum switching frequency can be reached.

Switching behaviour – Operating pressure

Type LF, MF and HF/LP

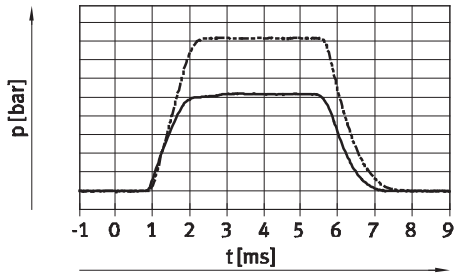

4 bar
6 bar

Type HF

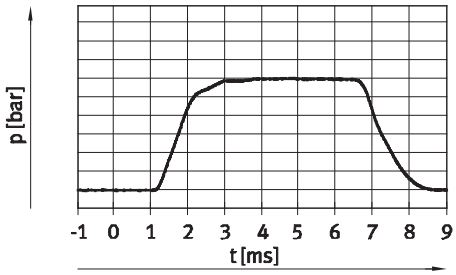

4 bar

Switching behaviour – Current/voltage curve

Type LF, MF and HF/LP

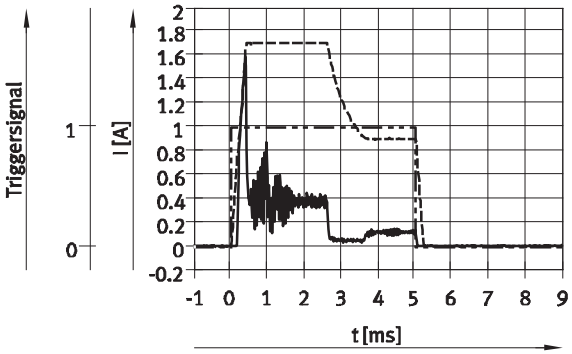

Current in the supply line at 24 V
Coil current
Trigger signal

Type HF

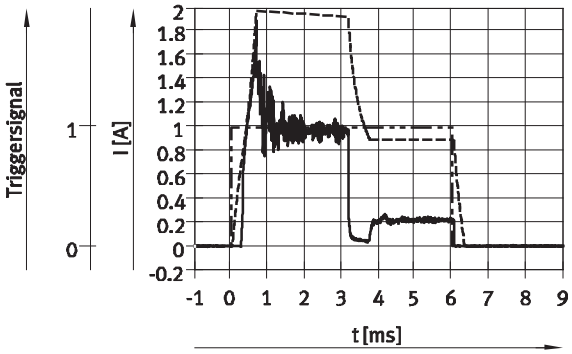

Current in the supply line at 24 V
Coil current
Trigger signal

Maximum permissible ambient temperature as a function of switching frequency

Type LF, MF and HF/LP

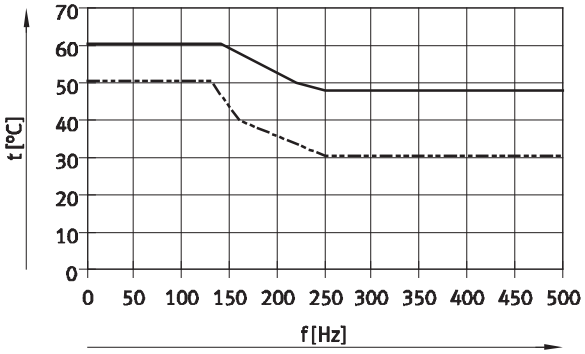

Individual valve, 4 bar
Manifold assembly/sub-base valve, 4 bar

Type HF

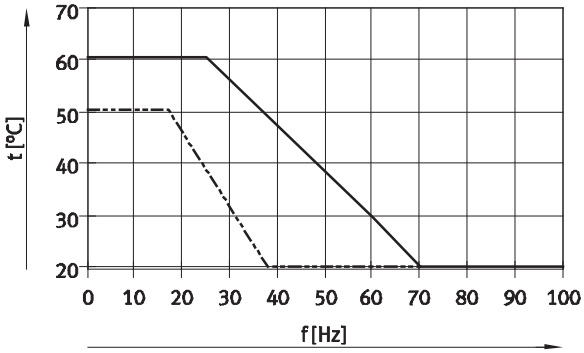

Individual valve, 4 bar
Manifold assembly/sub-base valve, 4 bar

Materials

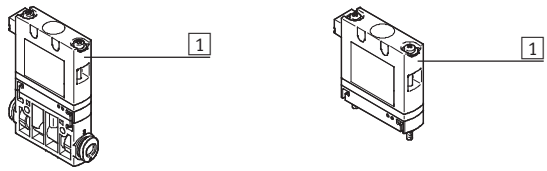

1	Housing	Reinforced polyamide
–	Seals	HNBR
–	Screws	Steel
–	Manifold rail	Anodised wrought aluminium alloy

Dimensions

Download CAD Data ➔ **www.festo.com/us/cad**

Semi in-line valve

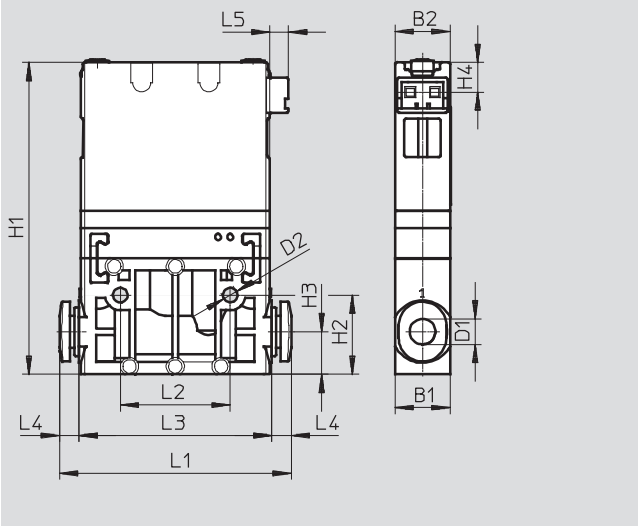

Sub-base valve

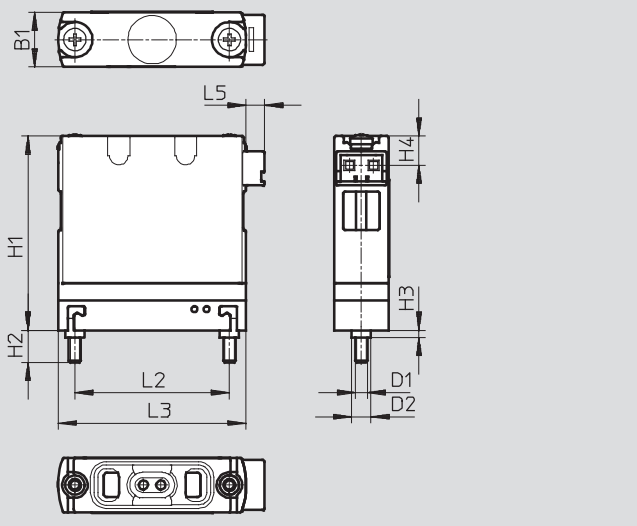

Type	B1	B2	D1	D2	H1	H2	H3	H4	L1	L2	L3	L4	L5
MHJ9-QS-4	9	9	4	2.4	51	13	7	5	38	1	32	3.2	3
MHJ9-QS-6	10	9	6						51	8		9.5	

Type	B1	D1	D2	H1	H2	H3	H4	L2	L3	L5
MHJ9	9	M2	3	32	5.3	1.2	5	25.5	31	3

Dimensions Download CAD Data ➔ **www.festo.com/us/cad**

Manifold mounting on MHJ9-P16 (with pneumatic connection M7)

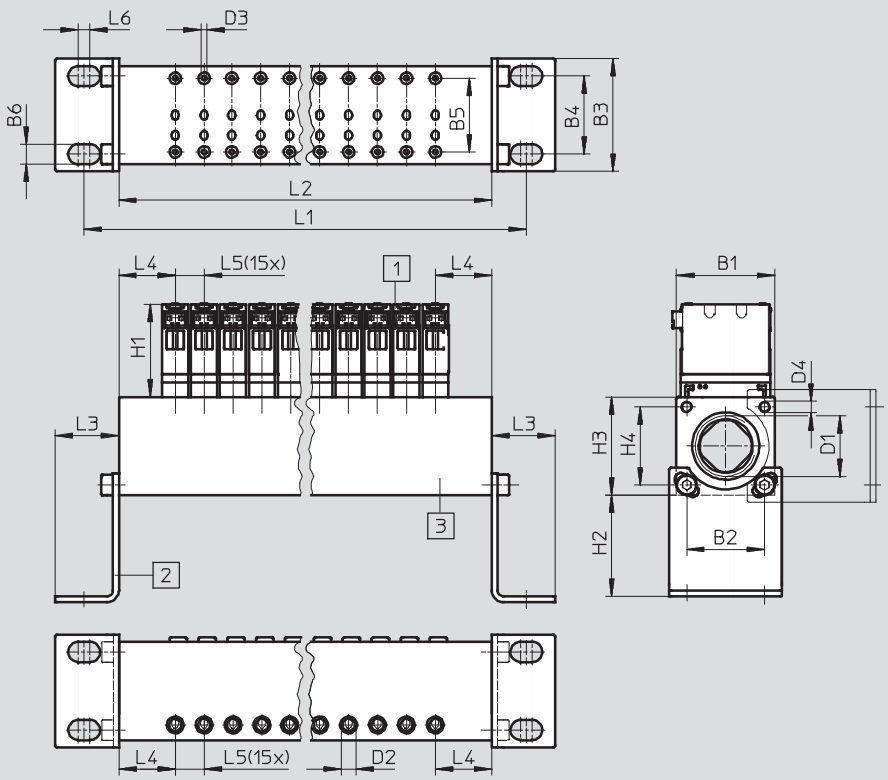

Manifold mounting on MHJ9-PN16 (with air nozzles)

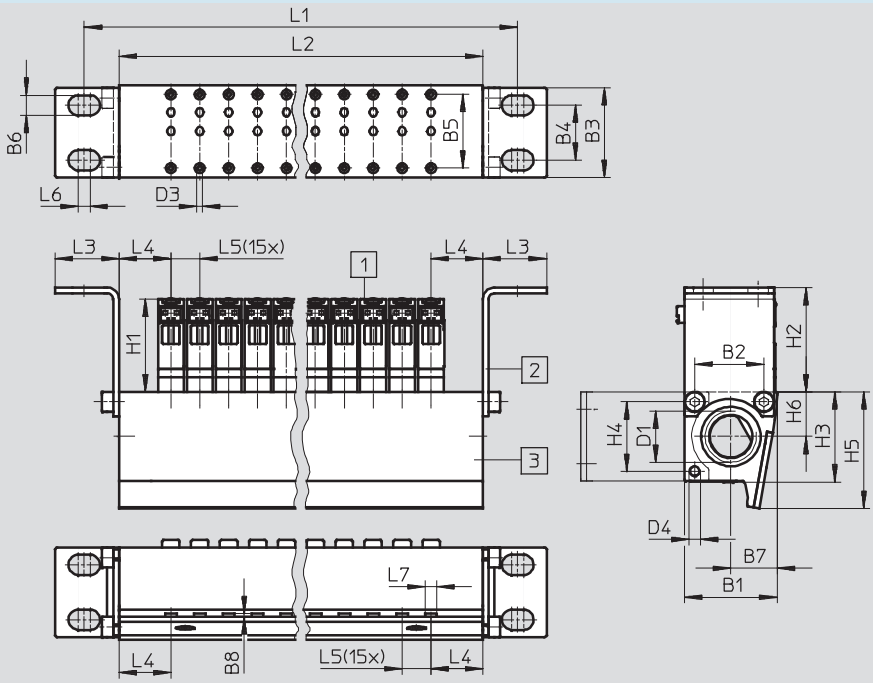

Type	B1	B2	B3	B4	B5	B6	B7	B8	D1	D2	D3	D4	H1	H2	H3	H4	H5	H6	L1	L2	L3	L4	L5	L6	L7
MHJ9-P16	34	27	39	27	26	7	–	–	G½	M7	M2	M4	32	35	34	27	–	–	213	189	22	20	10	4	–
MHJ9-PN16	32	24	31	19	26	7	15	1	G⅜	–	M2	M4	32	36	31	24	40	16	210	186	22	18	10	4	5

Solenoid valves MHJ9, fast-switching valves

Technical data

Ordering data					
	Description	Standard nominal flow rate	Operating pressure	Part No.	Type
In-line valve without connecting cable					
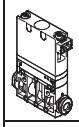	2/2-way solenoid valve	50 l/min	+0.5 ... +8 bar	**572079**	**MHJ9-QS-4-LF**
		100 l/min	+0.5 ... +6 bar	**553118**	**MHJ9-QS-4-MF**
		160 l/min	+0.5 ... +6 bar	**567790**	**MHJ9-QS-6-HF**
			+0.5 ... +4 bar	**567793**	**MHJ9-QS-6-HF/LP**
Sub-base valve without connecting cable					
	2/2-way solenoid valve	50 l/min	+0.5 ... +8 bar	**572078**	**MHJ9-LF**
		100 l/min	+0.5 ... +6 bar	**553115**	**MHJ9-MF**
		160 l/min	+0.5 ... +6 bar	**553117**	**MHJ9-HF**
			+0.5 ... +4 bar	**567792**	**MHJ9-HF/LP**

Ordering data – Accessories					
	Description			Part No.	Type
Connecting cable with control electronics for 2 valves					
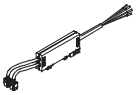	Mounting on H-rail, for static applications	For LF, MF and HF/LP valves	0.5 m	**553121**	**MHJ9-KMH-0,5-MF**
			2.5 m	**565519**	**MHJ9-KMH-2,5-MF**
		For HF valves	0.5 m	**562170**	**MHJ9-KMH-0,5-HF**
			2.5 m	**567505**	**MHJ9-KMH-2,5-HF**
Manifold rail					
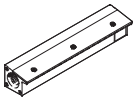	For 16 valves MHJ9, without mounting bracket, with air nozzles			**553123**	**MHJ9-PN16**
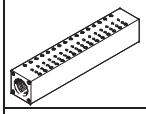	For 16 valves MHJ9, without mounting bracket, with pneumatic connection M7			**553125**	**MHJ9-P16**
Mounting kit					
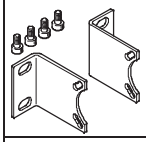	For manifold rail MHJ9-P16, consisting of 2 mounting brackets and 4 socket head screws M4x8 DIN912			**565455**	**MHJ-HW1**
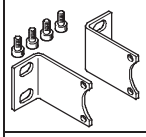	For manifold rail MHJ9-PN16, consisting of 2 mounting brackets and 4 socket head screws M4x8 DIN912			**565456**	**MHJ-HW2**
Push-in fitting for valve output, port 2					
	Connecting thread M7 for tubing O.D.	For manifold rail with LF or MF valves	4 mm (10 pieces)	**153319**	**QSM-M7-4-I**
		For manifold rail with HF or HF/LP valves	6 mm (10 pieces)	**153321**	**QSM-M7-6-I**
Push-in fitting for air supply, port 1					
	Connecting thread G½ for tubing O.D.		12 mm (1 piece)	**186104**	**QS-G½-12**
			16 mm (1 piece)	**186105**	**QS-G½-16**
	Connecting thread G⅜ for tubing O.D.		12 mm (10 pieces)	**186103**	**QS-G⅜-12**
			16 mm (10 pieces)	**186347**	**QS-G⅜-16**

Solenoid valves MHJ10, fast-switching valves

Peripherals overview

Individual valve, valve manifold design

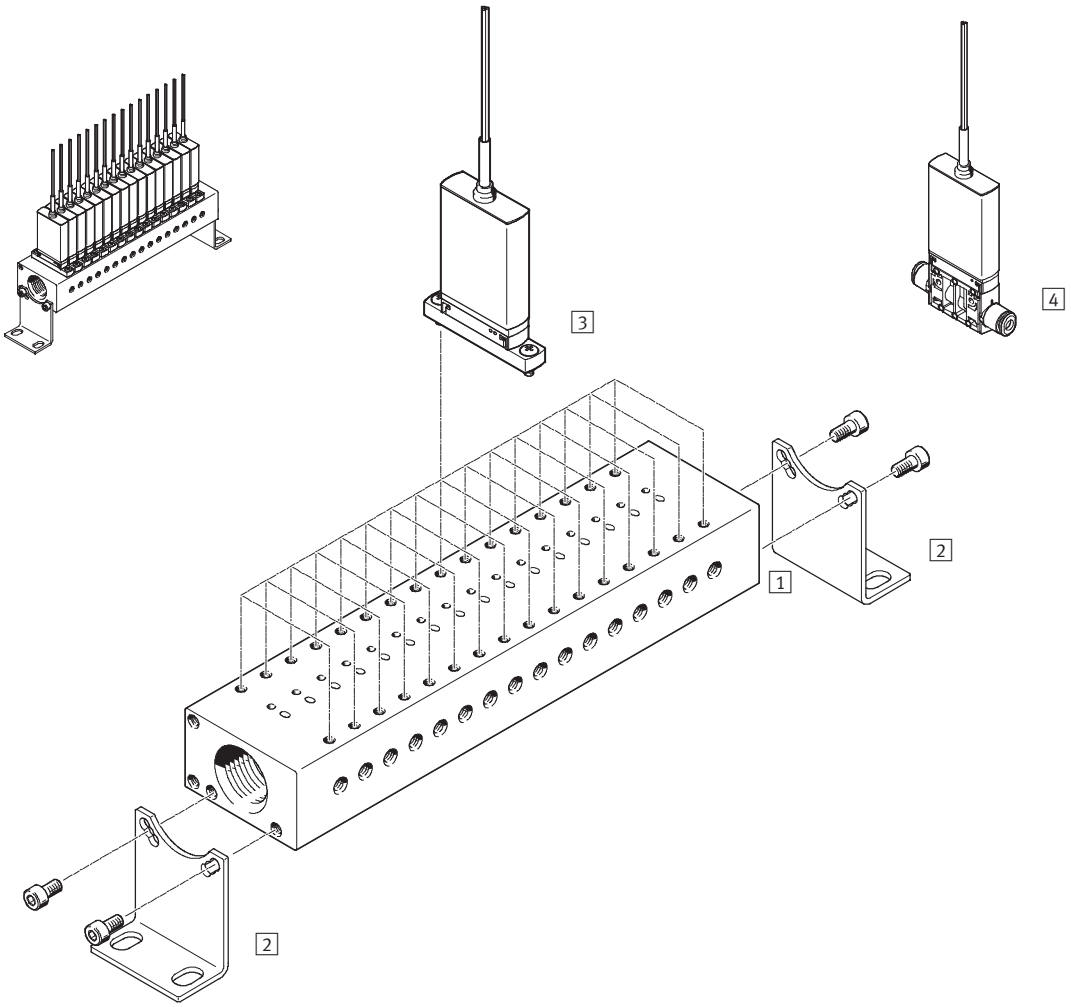

	Type	Brief description	➔ Page/Internet
1 Manifold rail	MHJ10-P16	With 16 valve positions	23
2 Mounting kit	MHJ-HW1	Consisting of 2 mounting brackets and 4 socket head screws	23
3 Sub-base valve	MHJ10	2/2-way solenoid valve	22
4 In-line valve	MHJ10	2/2-way solenoid valve	22

Valve manifold with accessories

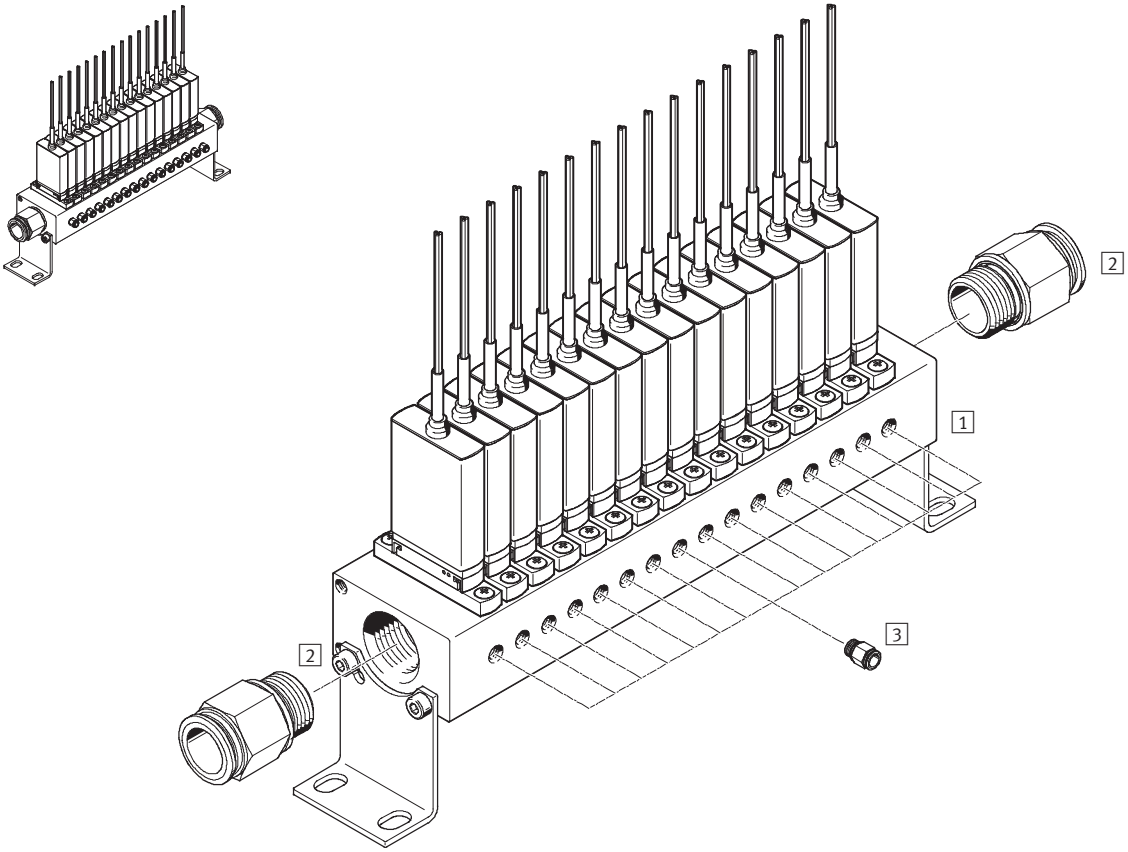

		Type	Brief description	➔ Page/Internet
1	Manifold rail	MHJ10-P16	With mounting kit MHJ-HW1	23
2	Push-in fitting	QS	For air supply 1	23
3	Push-in fitting	QS	For valve output 2	23

Solenoid valves MHJ10, fast-switching valves

Technical data

Function

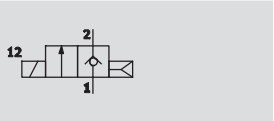

Width

10 mm

Flow rate

Max. 160 l/min

Voltage

24 V DC

General technical data									
Type		In-line valve MHJ10-S...QS				Sub-base valve MHJ10-S			
		LF	MF	HF	HF/LP	LF	MF	HF	HF/LP
Valve function		2/2-way valve, single solenoid, closed							
Design		Poppet valve without mechanical spring return							
Sealing principle		Hard							
Note on operation		Do not operate without flow rate							
Service life in billions of switching cycles[1]		5	5	0.5	0.5	5	5	0.5	0.5
Actuation type		Electric							
Reset method		Pneumatic spring							
Type of control		Direct							
Direction of flow		Non-reversible							
Mounting position		Any							
Width	[mm]	10[2]							
Grid dimension	[mm]	10.5							
Standard nominal flow rate	[l/min]	50	100	160	160	50	100	160	160
C value	[l/sbar]	0.2	0.4	0.66	0.66	0.2	0.4	0.66	0.66
b value		0.5	0.38	0.36	0.36	0.5	0.38	0.36	0.36
Type of mounting		In-line installation or via through-holes				On sub-base			
Pneumatic connection 1 and 2		QS4	QS4	QS6	QS6	Connecting thread M7			
Max. tightening torque of valve mounting	[Nm]	–				0.7			

1) The long service life of the valves can only be achieved with the "hard" sealing principle, which, however, results in minor leakage when the valve is closed.
2) Min. permissible grid dimension 10.5 mm

Operating and environmental conditions						
Type			LF	MF	HF	HF/LP
Operating medium			Compressed air in accordance with ISO 8573-1:2010 [7:4:4]			
Note on operating/pilot medium			Operation with lubricated medium not possible			
Operating pressure		[bar]	+0.5 ... +8	+0.5 ... +6	+0.5 ... +6	+0.5 ... +4
Ambient temperature		[°C]	–5 ... +60			
	With manifold assembly	[°C]	Max. +45	Max. +45	–	Max. +45
Temperature of medium		[°C]	–5 ... +60			
Storage temperature		[°C]	–20 ... +50			
Corrosion resistance class CRC[1]			2			
CE marking (see declaration of conformity)			To EU EMC Directive[2]			
Note on materials			RoHS-compliant			

1) Corrosion resistance class 2 according to Festo standard 940 070
Components subject to moderate corrosion stress. Externally visible parts with primarily decorative surface requirements which are in direct contact with a normal industrial environment or media such as coolants or lubricating agents.
2) For information about the applicability of the component see the manufacturer's EC declaration of conformity at: www.festo.com ➔ Support ➔ User documentation.
If the component is subject to restrictions on usage in residential, office or commercial environments or small businesses, further measures to reduce the emitted interference may be necessary. Max. permissible cable length 2.5 m.

Solenoid valves MHJ10, fast-switching valves

Technical data

Electrical data						
Type			LF	MF	HF	HF/LP
Operating voltage[1]		[V DC]	24 ±10% = 21.6 … 26.4			
Control signal range		[V DC]	3 … 30			
Power	Low-current phase	[W]	2	2	3.2	2
	High-current phase	[W]	7	7	14.5	7
Protection class to EN 60529			IP65			
Duty cycle[2]		[%]	100	100	–	100
Operating conditions to DIN VDE 0580[2]	With individual valve		–	–	S3 50% 20 min	–
	With manifold assembly		–	–	S3 15% 20 min	–
Electrical connection			3-wire cable			

1) If there is a current limit, during the switching operation it must be set to at least 1.7 A.
2) Air must flow through the valve continuously.

Switching times[1] and frequencies						
Type			LF	MF	HF	HF/LP
Maximum switching frequency		[Hz]	500	1,000	500	500
Switching times at 24 V DC						
Pressure 0.5 bar	Switching time on	[ms]	0.7	0.8	1	0.8
	Switching time off	[ms]	0.9	0.5	0.8	0.6
Pressure 4 bar	Switching time on	[ms]	0.8	0.8	1.2	1
	Switching time off	[ms]	1	0.4	0.6	0.5
Pressure 6 bar	Switching time on	[ms]	–	0.9	1.3	–
	Switching time off	[ms]	–	0.4	0.6	–
Pressure 8 bar	Switching time on	[ms]	0.9	–	–	–
	Switching time off	[ms]	0.9	–	–	–

1) Tolerance ±15%

Note

The maximum switching frequency that can be achieved decreases as the temperature of the valve increases or as the operating and ambient temperature increases.

The ambient temperature must therefore be limited accordingly so that the maximum switching frequency can be reached.

Switching behaviour – Operating pressure

Type LF, MF and HF/LP

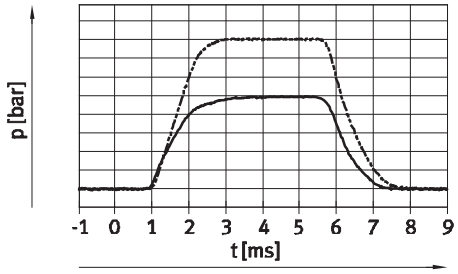

4 bar
6 bar

Type HF

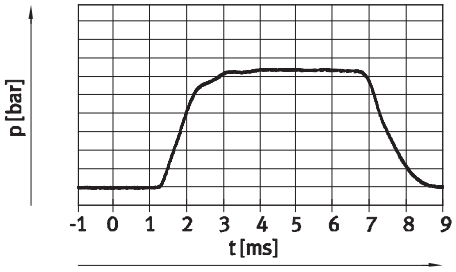

4 bar

Switching behaviour – Current/voltage curve

Type LF, MF and HF/LP

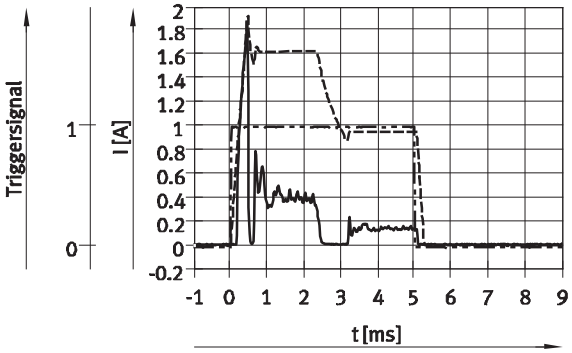

Current in the supply line at 24 V
Coil current
Trigger signal

Type HF

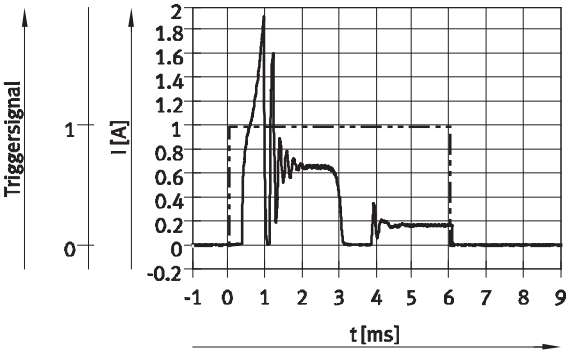

Current in the supply line at 24 V
Trigger signal

Maximum permissible ambient temperature as a function of switching frequency

Type LF, MF and HF/LP

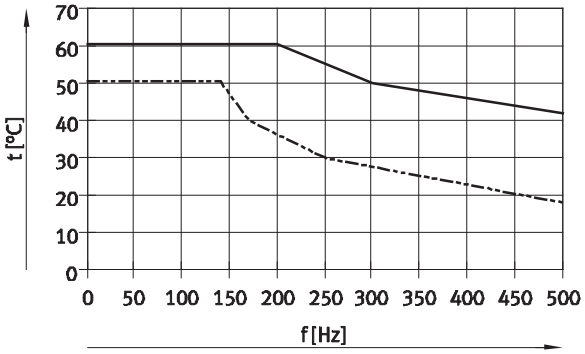

Individual valve, 4 bar
Manifold assembly/sub-base valve, 4 bar

Type HF

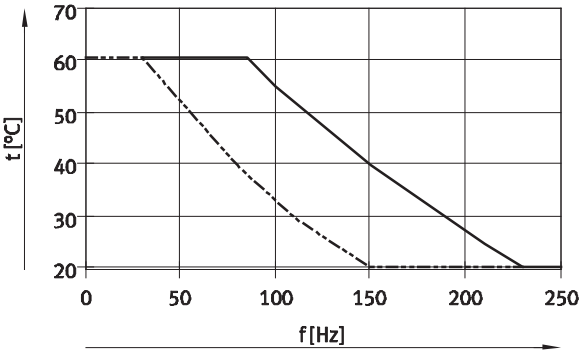

Individual valve, 4 bar
Manifold assembly/sub-base valve, 4 bar

Materials

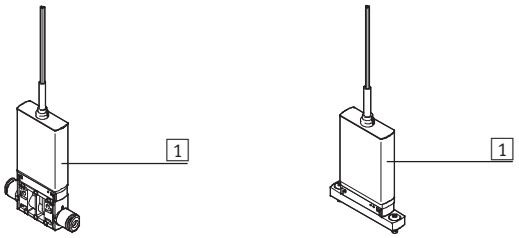

1	Housing	Reinforced polyamide
–	Seals	HNBR
–	Screws	Steel
–	Cable sheath	Polyurethane
–	Manifold rail	Anodised wrought aluminium alloy

Dimensions

Download CAD Data ➔ **www.festo.com/us/cad**

Semi in-line valve

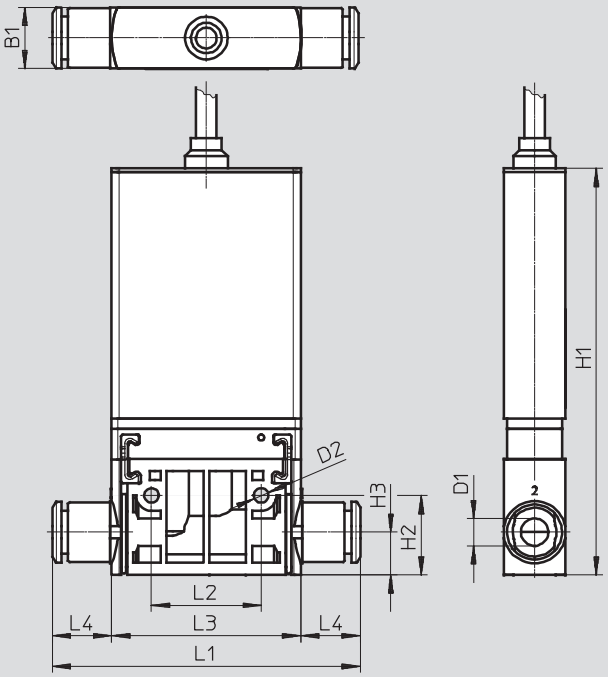

Wiring allocation:
BU = GND
BN = Operating voltage positive
BK = Trigger signal

Sub-base valve

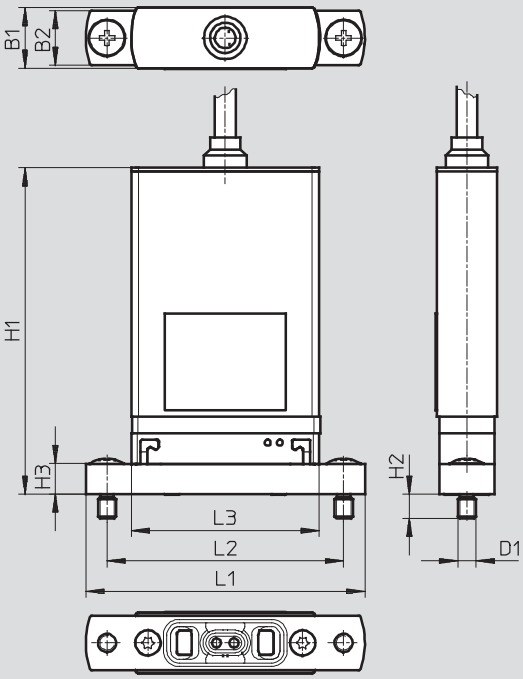

Wiring allocation:
BU = GND
BN = Operating voltage positive
BK = Trigger signal

Type	B1	D1	D2	H1	H2	H3	L1	L2	L3	L4
MHJ10-S...QS4	10	4	2.4	68	13	7	50.5	18	32	9.5
MHJ10-S...QS6		6								

Type	B1	B2	D1	H1	H2	H3	L1	L2	L3
MHJ10-S	10	9	M3	54	4	5	46	39	31

Dimensions Download CAD Data ➔ **www.festo.com/us/cad**

Manifold assembly

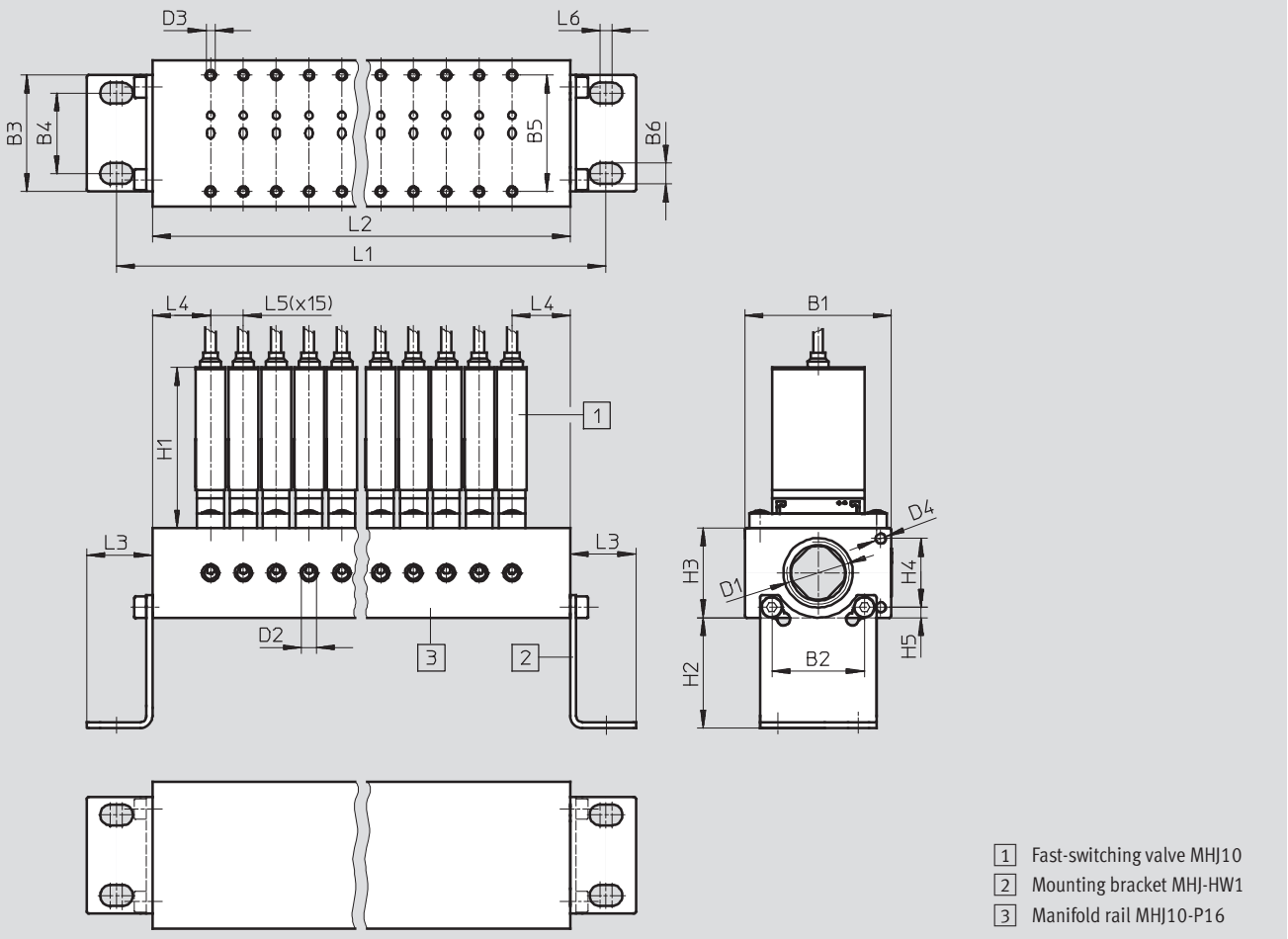

Type	B1	B2	B3	B4	B5	B6	D1	D2	D3	D4	H1	H2	H3	H4	H5	L1	L2	L3	L4	L5	L6
MHJ10-P16	49	31	39	27	39	7	G½	M7	M3	M4	54	37	30	23	3.5	228	204	22	20	11	4

Solenoid valves MHJ10, fast-switching valves

Technical data

Ordering data						
	Description	Standard nominal flow rate	Cable length	Operating pressure	Part No.	Type
In-line valve with connecting cable						
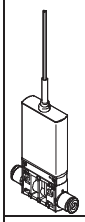	2/2-way solenoid valve	50 l/min	2.5 m	+0.5 ... +8 bar	**572081**	**MHJ10-S-2,5-QS-4-LF**
		100 l/min	0.35 m	+0.5 ... +6 bar	**557604**	**MHJ10-S-0,35-QS-4-MF**
			2.5 m	+0.5 ... +6 bar	**565515**	**MHJ10-S-2,5-QS-4-MF**
		160 l/min	2.5 m	+0.5 ... +6 bar	**567503**	**MHJ10-S-2,5-QS-6-HF**
				+0.5 ... +4 bar	**567798**	**MHJ10-S-2,5-QS-6-HF/LP**
Sub-base valve with connecting cable						
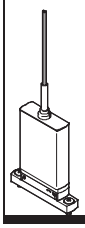	2/2-way solenoid valve	50 l/min	2.5 m	+0.5 ... +8 bar	**572080**	**MHJ10-S-2,5-LF**
		100 l/min	0.35 m	+0.5 ... +6 bar	**557601**	**MHJ10-S-0,35-MF**
			2.5 m	+0.5 ... +6 bar	**565513**	**MHJ10-S-2,5-MF**
		160 l/min	2.5 m	+0.5 ... +6 bar	**567502**	**MHJ10-S-2,5-HF**
				+0.5 ... +4 bar	**567796**	**MHJ10-S-2,5-HF/LP**

Ordering data – Accessories					
	Description			Part No.	Type
Manifold rail					
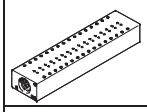	For 16 valves MHJ10, without mounting bracket, with pneumatic connection M7			**557608**	**MHJ10-P16**
Mounting kit					
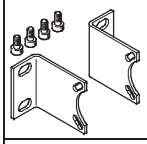	For manifold rail MHJ10-P16, consisting of 2 mounting brackets and 4 socket head screws M4x8 DIN912			**565455**	**MHJ-HW1**
Push-in fitting for valve output, port 2					
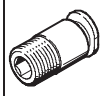	Connecting thread M7 for tubing O.D.	For manifold rail with LF or MF valves	4 mm (10 pieces)	**153319**	**QSM-M7-4-I**
		For manifold rail with HF or HF/LP valves	6 mm (10 pieces)	**153321**	**QSM-M7-6-I**
Push-in fitting for air supply, port 1					
	Connecting thread G½ for tubing O.D.		12 mm (1 piece)	**186104**	**QS-G½-12**
			16 mm (1 piece)	**186105**	**QS-G½-16**
	Connecting thread G⅜ for tubing O.D.		12 mm (10 pieces)	**186103**	**QS-G⅜-12**
			16 mm (10 pieces)	**186347**	**QS-G⅜-16**

Ordering data						
	Description	Standard nominal flow rate	Cable length	Operating pressure	Part No.	Type
In-line valve without connecting cable						
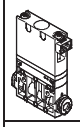	2/2-way solenoid valve	50 l/min	–	+0.5 ... +8 bar	**572079**	**MHJ9-QS-4-LF**
		100 l/min	–	+0.5 ... +6 bar	**553118**	**MHJ9-QS-4-MF**
		160 l/min	–	+0.5 ... +6 bar	**567790**	**MHJ9-QS-6-HF**
			–	+0.5 ... +4 bar	**567793**	**MHJ9-QS-6-HF/LP**
Sub-base valve without connecting cable						
	2/2-way solenoid valve	50 l/min	–	+0.5 ... +8 bar	**572078**	**MHJ9-LF**
		100 l/min	–	+0.5 ... +6 bar	**553115**	**MHJ9-MF**
		160 l/min	–	+0.5 ... +6 bar	**553117**	**MHJ9-HF**
			–	+0.5 ... +4 bar	**567792**	**MHJ9-HF/LP**
In-line valve with connecting cable						
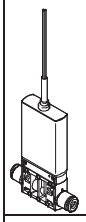	2/2-way solenoid valve	50 l/min	2.5 m	+0.5 ... +8 bar	**572081**	**MHJ10-S-2,5-QS-4-LF**
		100 l/min	0.35 m	+0.5 ... +6 bar	**557604**	**MHJ10-S-0,35-QS-4-MF**
			2.5 m	+0.5 ... +6 bar	**565515**	**MHJ10-S-2,5-QS-4-MF**
		160 l/min	2.5 m	+0.5 ... +6 bar	**567503**	**MHJ10-S-2,5-QS-6-HF**
				+0.5 ... +4 bar	**567798**	**MHJ10-S-2,5-QS-6-HF/LP**
Sub-base valve with connecting cable						
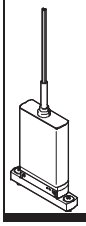	2/2-way solenoid valve	50 l/min	2.5 m	+0.5 ... +8 bar	**572080**	**MHJ10-S-2,5-LF**
		100 l/min	0.35 m	+0.5 ... +6 bar	**557601**	**MHJ10-S-0,35-MF**
			2.5 m	+0.5 ... +6 bar	**565513**	**MHJ10-S-2,5-MF**
		160 l/min	2.5 m	+0.5 ... +6 bar	**567502**	**MHJ10-S-2,5-HF**
				+0.5 ... +4 bar	**567796**	**MHJ10-S-2,5-HF/LP**

Ordering data					
	Description			Part No.	Type
Connecting cable					
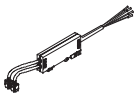	With control electronics for 2 valves, mounting on H-rail, for static applications	For LF, MF and HF/LP valves	0.5 m	**553121**	**MHJ9-KMH-0,5-MF**
			2.5 m	**565519**	**MHJ9-KMH-2,5-MF**
		For HF valves	0.5 m	**562170**	**MHJ9-KMH-0,5-HF**
			2.5 m	**567505**	**MHJ9-KMH-2,5-HF**
Manifold rail[1]					
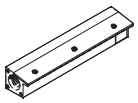	For 16 valves MHJ9, without mounting bracket, with air nozzles			**553123**	**MHJ9-PN16**
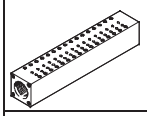	For 16 valves MHJ9, without mounting bracket, with pneumatic connection M7			**553125**	**MHJ9-P16**
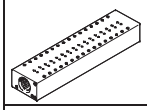	For 16 valves MHJ10, without mounting bracket, with pneumatic connection M7			**557608**	**MHJ10-P16**
Mounting kit					
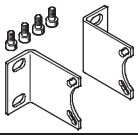	For manifold rail MHJ...-P16, consisting of 2 mounting brackets and 4 socket head screws M4x8 DIN912			**565455**	**MHJ-HW1**
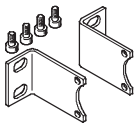	For manifold rail MHJ9-PN16, consisting of 2 mounting brackets and 4 socket head screws M4x8 DIN912			**565456**	**MHJ-HW2**
Push-in fitting for valve output, port 2					
	Connecting thread M7 for tubing O.D.	For manifold rail with LF or MF valves	4 mm (10 pieces)	**153319**	**QSM-M7-4-I**
		For manifold rail with HF or HF/LP valves	6 mm (10 pieces)	**153321**	**QSM-M7-6-I**
Push-in fitting for air supply, port 1					
	Connecting thread G½ for tubing O.D.		12 mm (1 piece)	**186104**	**QS-G½-12**
			16 mm (1 piece)	**186105**	**QS-G½-16**
	Connecting thread G⅜ for tubing O.D.		12 mm (10 pieces)	**186103**	**QS-G⅜-12**
			16 mm (10 pieces)	**186347**	**QS-G⅜-16**

1) Further versions/lengths available on request

Product Range and Company Overview

A Complete Suite of Automation Services

Our experienced engineers provide complete support at every stage of your development process, including: conceptualization, analysis, engineering, design, assembly, documentation, validation, and production.

Custom Automation Components
Complete custom engineered solutions

Custom Control Cabinets
Comprehensive engineering support and on-site services

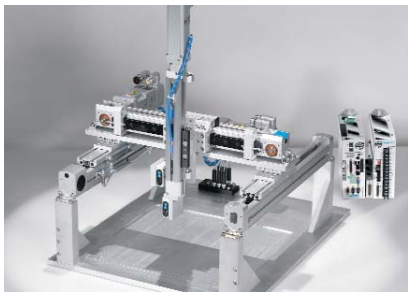

Complete Systems
Shipment, stocking and storage services

The Broadest Range of Automation Components

With a comprehensive line of more than 30,000 automation components, Festo is capable of solving the most complex automation requirements.

Electromechanical
Electromechanical actuators, motors, controllers & drives

Pneumatics
Pneumatic linear and rotary actuators, valves, and air supply

PLCs and I/O Devices
PLC's, operator interfaces, sensors and I/O devices

Supporting Advanced Automation... As No One Else Can!
Festo is a leading global manufacturer of pneumatic and electromechanical systems, components and controls for industrial automation, with more than 12,000 employees in 56 national headquarters serving more than 180 countries. For more than 80 years, Festo has continuously elevated the state of manufacturing with innovations and optimized motion control solutions that deliver higher performing, more profitable automated manufacturing and processing equipment. Our dedication to the advancement of automation extends beyond technology to the education and development of current and future automation and robotics designers with simulation tools, teaching programs, and on-site services.

Quality Assurance, ISO 9001 and ISO 14001 Certifications

Festo Corporation is committed to supply all Festo products and services that will meet or exceed our customers' requirements in product quality, delivery, customer service and satisfaction.

To meet this commitment, we strive to ensure a consistent, integrated, and systematic approach to management that will meet or exceed the requirements of the ISO 9001 standard for Quality Management and the ISO 14001 standard for Environmental Management.

9001: CERTCC5-16248-2006-AQ-ESN-TGA
ISO 9001
ISO 14001
DNV
Certified Company
14001: CERTCC5-16248A-2006-AQ-ESN-TGA

FSC
Printed on recycled paper at New Horizon Graphic, Inc., FSC certified as an environmentally friendly printing plant.

Festo North America

Festo Regional Contact Center

5300 Explorer Drive
Mississauga, Ontario L4W 5G4
Canada

USA Customers:

For ordering assistance,
Call: 1.800.99.FESTO (1.800.993.3786)
Fax: 1.800.96.FESTO (1.800.963.3786)
Email: customer.service@us.festo.com

For technical support,
Call: 1.866.GO.FESTO (1.866.463.3786)
Fax: 1.800.96.FESTO (1.800.963.3786)
Email: product.support@us.festo.com

Canadian Customers:

Call: 1.877.GO.FESTO (1.877.463.3786)
Fax: 1.877.FX.FESTO (1.877.393.3786)
Email: festo.canada@ca.festo.com

USA Headquarters

Festo Corporation
395 Moreland Road
P.O. Box 18023
Hauppauge, NY 11788, USA
www.festo.com/us

USA Sales Offices

Appleton
North 922 Tower View Drive, Suite N
Greenville, WI 54942, USA

Boston
120 Presidential Way, Suite 330
Woburn, MA 01801, USA

Chicago
1441 East Business Center Drive
Mt. Prospect, IL 60056, USA

Dallas
1825 Lakeway Drive, Suite 600
Lewisville, TX 75057, USA

Detroit – Automotive Engineering Center
2601 Cambridge Court, Suite 320
Auburn Hills, MI 48326, USA

New York
395 Moreland Road
Hauppauge, NY 11788, USA

Silicon Valley
4935 Southfront Road, Suite F
Livermore, CA 94550, USA

United States

USA Headquarters, East: Festo Corp., 395 Moreland Road, Hauppauge, NY 11788
Phone: 1.631.435.0800; Fax: 1.631.435.8026;
Email: info@festo-usa.com **www.festo.com/us**

Canada

Headquarters: Festo Inc., 5300 Explorer Drive, Mississauga, Ontario L4W 5G4
Phone: 1.905.624.9000; Fax: 1.905.624.9001;
Email: festo.canada@ca.festo.com **www.festo.ca**

Mexico

Headquarters: Festo Pneumatic, S.A., Av. Ceylán 3, Col. Tequesquinahuac,
54020 Tlalnepantla, Edo. de México
Phone: 011 52 [55] 53 21 66 00; Fax: 011 52 [55] 53 21 66 65;
Email: festo.mexico@mx.festo.com **www.festo.com/mx**

Central USA
Festo Corporation
1441 East Business
Center Drive
Mt. Prospect, IL 60056, USA
Phone: 1.847.759.2600
Fax: 1.847.768.9480

Western USA
Festo Corporation
4935 Southfront Road,
Suite F
Livermore, CA 94550, USA
Phone: 1.925.371.1099
Fax: 1.925.245.1286

Festo Worldwide

Argentina Australia Austria Belarus Belgium Brazil Bulgaria Canada Chile China Colombia Croatia Czech Republic Denmark Estonia Finland France Germany Great Britain Greece Hong Kong Hungary India Indonesia Iran Ireland Israel Italy Japan Latvia Lithuania Malaysia Mexico Netherlands New Zealand Norway Peru Philippines Poland Romania Russia Serbia Singapore Slovakia Slovenia South Africa South Korea Spain Sweden Switzerland Taiwan Thailand Turkey Ukraine United States Venezuela

www.festo.com