Angle grippers HGWM, micro

Angle grippers HGWM, micro

Key features

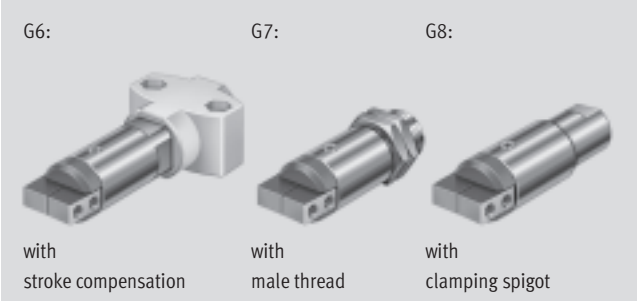

At a glance

- Compact, handy design
- With open or closed gripper jaws
- Versatility thanks to externally adaptable gripper fingers
- Wide range of options for attaching drive units
- With stroke compensation after installation
- Mounting options:
  - Clamping spigot
  - Male thread

Note

Sizing software
Gripper selection
➔www.festo.com

Mounting options for external gripper fingers (customer-specific)

1 Angle gripper
2 External gripper fingers
3 Mounting screws

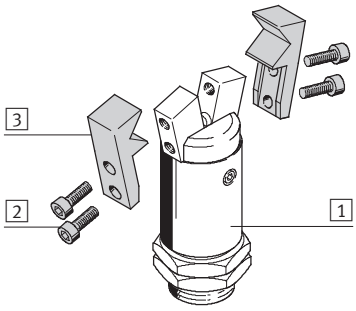

Note

Grippers are not suitable for the following, or for similar applications:

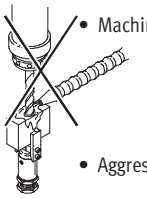

- Machining
- Aggressive media

- Grinding dust

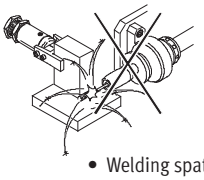

- Welding spatter

Angle grippers HGWM, micro

Key features

Mounting options

With through-holes

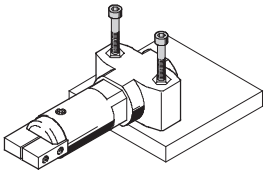

With through-holes, screws and retaining nuts

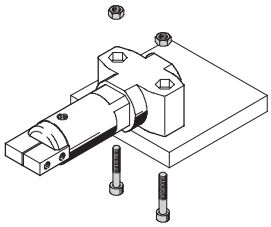

With set screw
Direct air supply

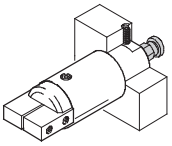

Integrated air supply

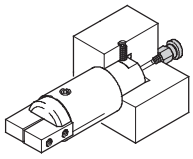

With male thread and lock nut

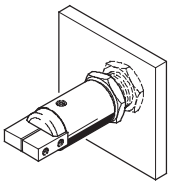

System product for handling and assembly technology

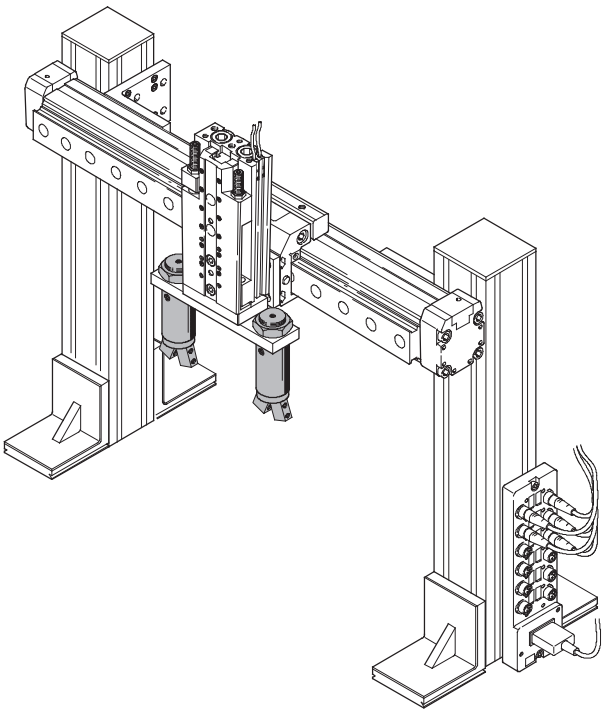

	➔ Page/Internet
Drives	drive
Grippers	gripper
Adapters	adapter kit
Basic mounting components	basic component
Installation components	installation component
Axes	axes
Motors	motor

Angle grippers HGWM, micro

Type codes

HGWM	–	12	–	EO	–	G8

Type	
HGWM	Angle gripper

Size

Gripper jaw position	
EO	Open
EZ	Closed

Mounting options	
G6	With stroke compensation
G7	With male thread
G8	With clamping spigot

Angle grippers HGWM, micro

Technical data

Function	-N-	Size
Single-acting with open gripper jaws HGWM-...-EO-G...		8 ... 12 mm

with closed gripper jaws
HGWM-...-EZ-G...

G6:

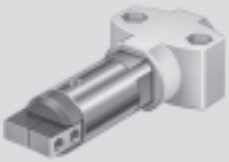

with
stroke compensation

G7:

with
male thread

G8:

with
clamping spigot

General technical data					
Size				8	12
Constructional design				Wedge-shaped drive	
Mode of operation				Single-acting	
Gripper function				Angle	
Number of gripper jaws				2	
Opening angle (±2°)	Gripper jaws open	Open	[°]	20	18.5
		Closed	[°]	4	3.5
	Gripper jaws closed	Open	[°]	14	14
		Closed	[°]	4	4
Spring resetting torque[1]	Gripper jaws open		[Ncm]	0.5	1.3
	Gripper jaws closed		[Ncm]	0.55	1.5
Pneumatic connection				M3	
Repetition accuracy[2] [3]			[mm]	< 0.02	
Max. operating frequency			[Hz]	4	
Position sensing				Without	
Type of mounting	HGWM-...-E...-G6			With internally threaded cap screws	
	HGWM-...-E...-G7			With lock nut	
	HGWM-...-E...-G8			Clamped	

1) Spring resetting force between the gripper jaws
2) End position drift under constant conditions of use with 100 consecutive strokes in the direction of movement of the gripper jaws
3) The indicated values are only valid when gripping with compressed air, not with spring force

Operating and environmental conditions		
Min. operating pressure	[bar]	2
Max. operating pressure	[bar]	8
Operating medium		Compressed air in accordance with ISO 8573-1:2010 [7:–:–]
Ambient temperature	[°C]	+5 ... +60
Corrosion resistance class CRC[1]		2

1) Corrosion resistance class 2 according to Festo standard 940 070
Components requiring moderate corrosion resistance. Externally visible parts with primarily decorative surface requirements which are in direct contact with a normal industrial environment or media such as coolants or lubricating agents

Weights [g]		
Size	8	12
With stroke compensation	23	75
With male thread	14	52
With clamping spigot	13	45

Angle grippers HGWM, micro

Technical data

Materials

Sectional view

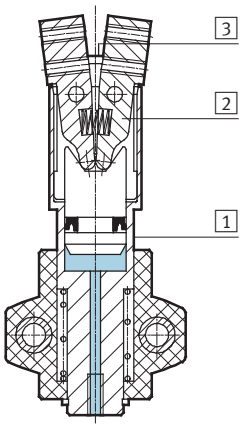

Angle gripper		
1	Body	Stainless steel
2	Gripper jaw	Stainless steel
3	Cover cap	Polyacetate
–	Note on materials	Copper, PTFE and silicone-free
		Conforms to RoHS

Total gripping torque [Ncm] at 6 bar

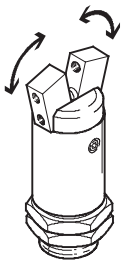

Size	8		12	
	HGWM-...EO-...	HGWM-...EZ-...	HGWM-...EO-...	HGWM-...EZ-...
Total gripping torque				
Opening	–	24	–	76
Closing	22	–	64	–

Characteristic load values at the gripper jaws

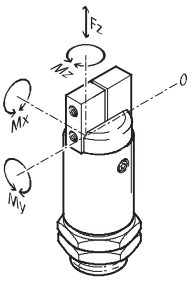

The indicated permissible forces and torques apply to a single gripper jaw. Static forces and torques relate to additional applied loads caused by the workpiece or external gripper fingers, as well as forces which occur during handling. The zero co-ordinate line (gripper jaws point of rotation) must be taken into consideration for the calculation of torques.

Size		8	12
Max. permissible force F_Z	[N]	7	20
Max. permissible torque M_X	[Ncm]	20	40
Max. permissible torque M_Y	[Ncm]	20	40
Max. permissible torque M_Z	[Ncm]	20	40

Applied load [N] and mass moment of inertia [kgm²x10⁻⁴] per external gripper finger

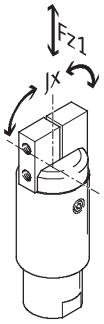

Size	8	12
Applied load Fz_1 1)	< 0.04	< 0.1
Mass moment of inertia Jx 1)	< 0.025	< 0.056

1) Valid for unthrottled operation

Mass moment of inertia [kgm²x10⁻⁴]

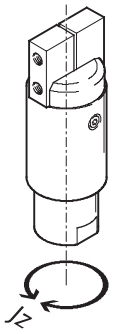

Mass moment of inertia [$kgm^2 x 10^{-4}$] for angle grippers in relation to the central axis without external gripper fingers.

Size	8	12
With stroke compensation	0.00705	0.0421
With male thread	0.00315	0.0267
With clamping spigot	0.00252	0.02154

Opening and closing times [ms] at 6 bar

Without external gripper fingers

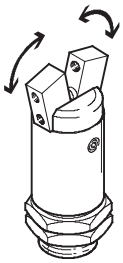

The indicated opening and closing times [ms] have been measured at room temperature and 6 bar operating pressure with vertically mounted gripper and without external gripper fingers. Load is increased if external gripper fingers are attached. This means that kinetic energy is also increased, as this is determined by gripper finger mass moment of inertia and angular velocity.

Size		8	12
HGWM-...EO-...	Opening	2.7	3.7
	Closing	1.2	1.8
HGWM-...EZ-...	Opening	1	1.7
	Closing	2.5	2.8

Gripper jaw backlash

Without external gripper fingers

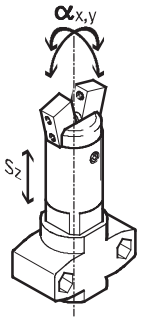

With angle grippers, backlash occurs between the gripper jaws and the guide element due to the plain-bearing guide. The backlash values listed in the table have been calculated based upon the traditional accumulative tolerance method and usually do not occur with mounted grippers.

Size		8	12
Gripper jaw backlash s_z	[mm]	< 0.03	
Gripper jaw angular backlash a_x, a_y	[°]	< 0.5	

Spring displacement forces [N]

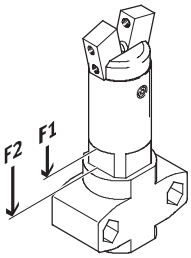

Theoretical actuating force due to stroke compensation for design variant with stroke compensation.

Size	8	12
Spring displacement forces F_1	4	10
Spring displacement forces F_2	6	23

Application example

Dimensions

Download CAD Data ➔ **www.festo.com/us/cad**

With stroke compensation – HGWM-...-E...-G6

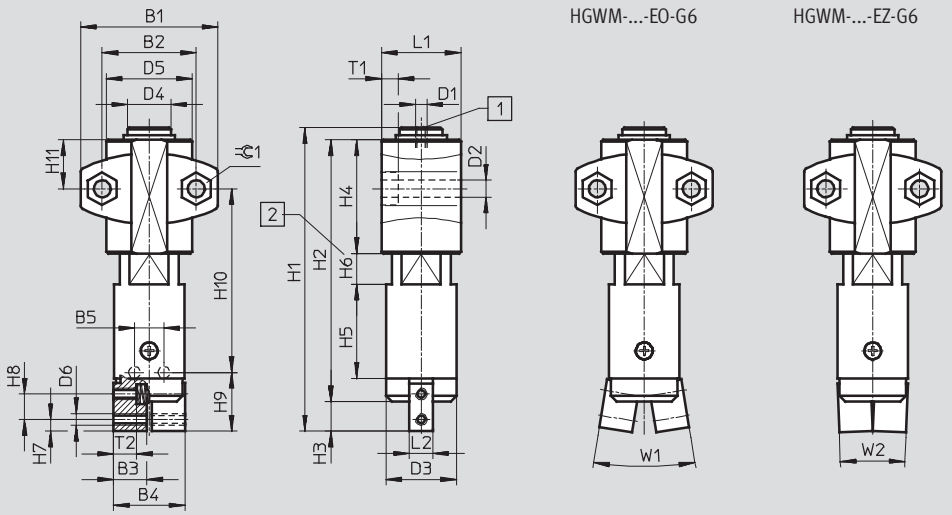

1 Compressed air connection
2 Stroke compensation

With male thread – HGWM-...-E...-G7

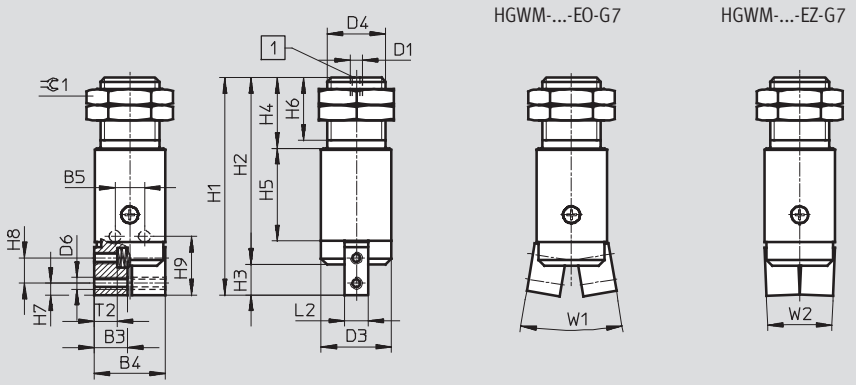

1 Compressed air connection

With clamping spigot – HGWM-...-E...-G8

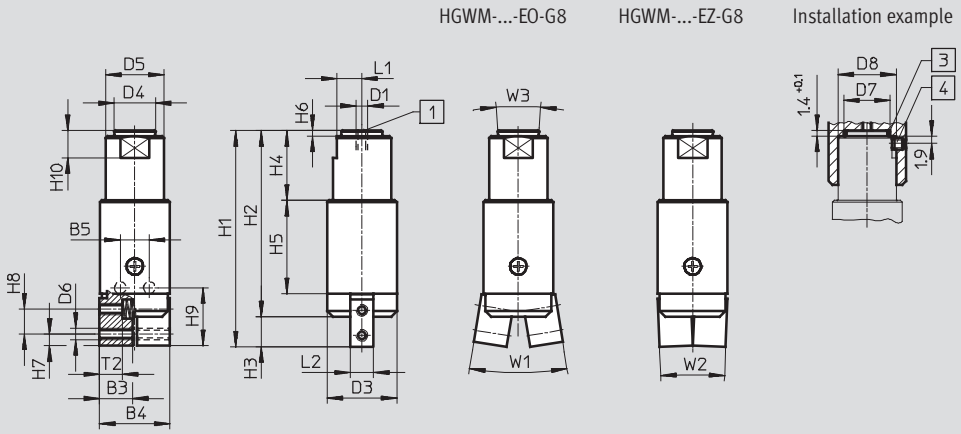

1 Compressed air connection
3 O-ring:
HGWM-08: 6x1
HGWM-12: 10x1
(Not included in the scope of delivery)
4 Threaded pin M3x3 DIN 913
(Not included in the scope of delivery)

Angle grippers HGWM, micro

Technical data

Type	B1 ±0.1	B2 ±0.25	B3	B4 ±0.3	B5	D1	D2 ∅ +0.1	D3 ∅ +0.1	D4 ∅	D5 ∅	D6
HGWM-08-EO-G6	24	15	5.5	11.8	5 ±0.02	M3	3.4	12	8 –0.02/–0.05	15 ±0.5	M2
HGWM-08-EZ-G6											
HGWM-12-EO-G6	35	24	8.5	18.2	7.5 –0.05	M3	4.5	18	11 –0.02/–0.05	22 ±0.5	M3
HGWM-12-EZ-G6											
HGWM-08-EO-G7	–	–	5.5	11.8	5 ±0.02	M3	–	12	M10x1	–	M2
HGWM-08-EZ-G7											
HGWM-12-EO-G7	–	–	8.5	18.2	7.5 –0.05	M3	–	18	M15x1.5	–	M3
HGWM-12-EZ-G7											
HGWM-08-EO-G8	–	–	5.5	11.8	5 ±0.02	M3	–	12	6.6 –0.03	10 h8	M2
HGWM-08-EZ-G8											
HGWM-12-EO-G8	–	–	8.5	18.2	7.5 –0.05	M3	–	18	10.6 –0.03	15 h8	M3
HGWM-12-EZ-G8											

Type	D7 ∅ +0.1	D8 +0.1	H1 +0.25	H2	H3	H4	H5 +0.1	H6	H7	H8	H9 +0.1
HGWM-08-EO-G6	–	–	54	47 ±0.3	5 ±0.2	22–0.3	16	0 ... 5 +0.6/–0.3	2	4.3	10
HGWM-08-EZ-G6											
HGWM-12-EO-G6	–	–	77.5	67 ±0.3	7.5	29–0.3	24	0 ... 8 +0.6/–0.3	3	6.5	15
HGWM-12-EZ-G6											
HGWM-08-EO-G7	–	–	37	32 +0.3/–0.2	5 ±0.2	12	16	11	2	4.3	10
HGWM-08-EZ-G7											
HGWM-12-EO-G7	–	–	55.5	48 +0.3/–0.2	7.5	18	24	16	3	6.5	15
HGWM-12-EZ-G7											
HGWM-08-EO-G8	8	10	37	32 +0.3/–0.2	5 ±0.2	12	16	1.4 –0.1	2	4.3	10
HGWM-08-EZ-G8											
HGWM-12-EO-G8	12	15	55.5	48 +0.3/–0.2	7.5	18	24	1.4 –0.1	3	6.5	15
HGWM-12-EZ-G8											

Type	H10	H11 ±0.3	L1	L2 –0.02	T1 –0.2	T2[1]	W1 ±2°	W2 ±2°	W3 ±2°	=⊂1
HGWM-08-EO-G6	32.4 ±0.6	9.5	14.2 –0.2	4	3	3.4 ±0.2	20°	4°	–	5.7
HGWM-08-EZ-G6						–	14°			
HGWM-12-EO-G6	47 ±0.6	12.5	20.2 –0.2	6	4	5.9	18.5°	3.5°	–	7.5
HGWM-12-EZ-G6						–	14°	4°		
HGWM-08-EO-G7	–	–	–	4	–	3.4 ±0.2	20°	4°	–	12
HGWM-08-EZ-G7						–	14°			
HGWM-12-EO-G7	–	–	–	6	–	5.9	18.5°	3.5°	–	19
HGWM-12-EZ-G7						–	14°	4°		
HGWM-08-EO-G8	5	–	4.5 –0.05	4	–	3.4 ±0.2	20°	4°	8°	–
HGWM-08-EZ-G8						–	14°			
HGWM-12-EO-G8	7	–	6.5 –0.05	6	–	5.9	18.5°	3.5°	8°	–
HGWM-12-EZ-G8						–	14°	4°		

1) Do not exceed max. thread screw-in depth

Angle grippers HGWM, micro

Technical data and accessories

Ordering data							
Single-acting	Size	Mounting options					
		With stroke compensation		With male thread		With clamping spigot	
	[mm]	Part No.	Type	Part No.	Type	Part No.	Type
Gripper jaws open	8	**185 693**	**HGWM-08-EO-G6**	**185 694**	**HGWM-08-EO-G7**	**185 695**	**HGWM-08-EO-G8**
	12	**185 699**	**HGWM-12-EO-G6**	**185 700**	**HGWM-12-EO-G7**	**185 701**	**HGWM-12-EO-G8**
Gripper jaws closed	8	**185 696**	**HGWM-08-EZ-G6**	**185 697**	**HGWM-08-EZ-G7**	**185 698**	**HGWM-08-EZ-G8**
	12	**185 702**	**HGWM-12-EZ-G6**	**185 703**	**HGWM-12-EZ-G7**	**185 704**	**HGWM-12-EZ-G8**

Accessories	
For angle grippers with clamping flange	
Adapter kits A08 and A12	
	In combination with semi-rotary drives DRQD-6 to 12 ➔Internet: drqd Adapter kits for drive/gripper combinations ➔Internet: adapter kit

Permissible drive/gripper combinations with adapter kit — Download CAD data ➔ **www.festo.com**

Combination	Drive	Gripper			Semi-rotary drive[2]		
	Size	Size	Mounting option		CRC[1]	Part No.	Type
DRQD/HGWM	DRQD	HGWM					
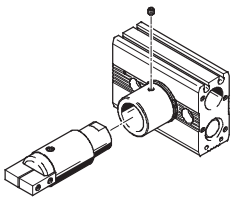	6, 8, 12	8	■	■	2	**187431**	**DRQD-6-...-A08-HS**
						187432	**DRQD-8-...-A08-HS**
						187433	**DRQD-12-...-A08-HS**
	6, 8, 12	12	■	■		**187431**	**DRQD-6-...-A12-HS**
						187432	**DRQD-8-...-A12-HS**
						187433	**DRQD-12-...-A12-HS**

1) Corrosion resistance class 2 according to Festo standard 940 070
Components subject to moderate corrosion stress. Externally visible parts with primarily decorative surface requirements which are in direct contact with a normal industrial environment or media such as coolants or lubricating agents.

Note

2) Semi-rotary drives DRQD are ordered using the modular product system with the corresponding adapter kit (code A...) and hollow bolt (code HS).

The kit includes the individual mounting interface as well as the necessary mounting material.

Product Range and Company Overview

A Complete Suite of Automation Services

Our experienced engineers provide complete support at every stage of your development process, including: conceptualization, analysis, engineering, design, assembly, documentation, validation, and production.

Custom Automation Components
Complete custom engineered solutions

Custom Control Cabinets
Comprehensive engineering support and on-site services

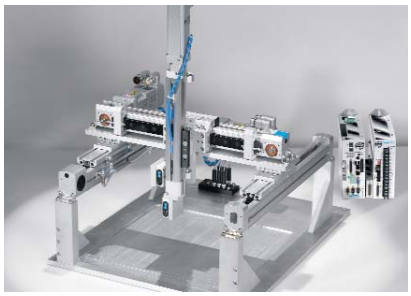

Complete Systems
Shipment, stocking and storage services

The Broadest Range of Automation Components

With a comprehensive line of more than 30,000 automation components, Festo is capable of solving the most complex automation requirements.

Electromechanical
Electromechanical actuators, motors, controllers & drives

Pneumatics
Pneumatic linear and rotary actuators, valves, and air supply

PLCs and I/O Devices
PLC's, operator interfaces, sensors and I/O devices

Supporting Advanced Automation... As No One Else Can!
Festo is a leading global manufacturer of pneumatic and electromechanical systems, components and controls for industrial automation, with more than 12,000 employees in 56 national headquarters serving more than 180 countries. For more than 80 years, Festo has continuously elevated the state of manufacturing with innovations and optimized motion control solutions that deliver higher performing, more profitable automated manufacturing and processing equipment. Our dedication to the advancement of automation extends beyond technology to the education and development of current and future automation and robotics designers with simulation tools, teaching programs, and on-site services.

Quality Assurance, ISO 9001 and ISO 14001 Certifications

Festo Corporation is committed to supply all Festo products and services that will meet or exceed our customers' requirements in product quality, delivery, customer service and satisfaction.

To meet this commitment, we strive to ensure a consistent, integrated, and systematic approach to management that will meet or exceed the requirements of the ISO 9001 standard for Quality Management and the ISO 14001 standard for Environmental Management.

9001: CERTCC5-16248-2006-AQ-ESN-TGA
ISO 9001
ISO 14001
DNV
Certified Company
14001: CERTCC5-16248A-2006-AQ-ESN-TGA

FSC
Printed on recycled paper at New Horizon Graphic, Inc., FSC certified as an environmentally friendly printing plant.

Festo North America

Festo Regional Contact Center

5300 Explorer Drive
Mississauga, Ontario L4W 5G4
Canada

USA Customers:

For ordering assistance,
Call: 1.800.99.FESTO (1.800.993.3786)
Fax: 1.800.96.FESTO (1.800.963.3786)
Email: customer.service@us.festo.com

For technical support,
Call: 1.866.GO.FESTO (1.866.463.3786)
Fax: 1.800.96.FESTO (1.800.963.3786)
Email: product.support@us.festo.com

Canadian Customers:

Call: 1.877.GO.FESTO (1.877.463.3786)
Fax: 1.877.FX.FESTO (1.877.393.3786)
Email: festo.canada@ca.festo.com

USA Headquarters

Festo Corporation
395 Moreland Road
P.O. Box 18023
Hauppauge, NY 11788, USA
www.festo.com/us

USA Sales Offices

Appleton
North 922 Tower View Drive, Suite N
Greenville, WI 54942, USA

Boston
120 Presidential Way, Suite 330
Woburn, MA 01801, USA

Chicago
1441 East Business Center Drive
Mt. Prospect, IL 60056, USA

Dallas
1825 Lakeway Drive, Suite 600
Lewisville, TX 75057, USA

Detroit – Automotive Engineering Center
2601 Cambridge Court, Suite 320
Auburn Hills, MI 48326, USA

New York
395 Moreland Road
Hauppauge, NY 11788, USA

Silicon Valley
4935 Southfront Road, Suite F
Livermore, CA 94550, USA

United States

USA Headquarters, East: Festo Corp., 395 Moreland Road, Hauppauge, NY 11788
Phone: 1.631.435.0800; Fax: 1.631.435.8026;
Email: info@festo-usa.com **www.festo.com/us**

Canada

Headquarters: Festo Inc., 5300 Explorer Drive, Mississauga, Ontario L4W 5G4
Phone: 1.905.624.9000; Fax: 1.905.624.9001;
Email: festo.canada@ca.festo.com **www.festo.ca**

Mexico

Headquarters: Festo Pneumatic, S.A., Av. Ceylán 3, Col. Tequesquinahuac,
54020 Tlalnepantla, Edo. de México
Phone: 011 52 [55] 53 21 66 00; Fax: 011 52 [55] 53 21 66 65;
Email: festo.mexico@mx.festo.com **www.festo.com/mx**

Central USA
Festo Corporation
1441 East Business
Center Drive
Mt. Prospect, IL 60056, USA
Phone: 1.847.759.2600
Fax: 1.847.768.9480

Western USA
Festo Corporation
4935 Southfront Road,
Suite F
Livermore, CA 94550, USA
Phone: 1.925.371.1099
Fax: 1.925.245.1286

Festo Worldwide

Argentina Australia Austria Belarus Belgium Brazil Bulgaria Canada Chile China Colombia Croatia Czech Republic Denmark Estonia Finland France Germany Great Britain Greece Hong Kong Hungary India Indonesia Iran Ireland Israel Italy Japan Latvia Lithuania Malaysia Mexico Netherlands New Zealand Norway Peru Philippines Poland Romania Russia Serbia Singapore Slovakia Slovenia South Africa South Korea Spain Sweden Switzerland Taiwan Thailand Turkey Ukraine United States Venezuela

www.festo.com