M5 Compact System

Key features

- Flow rate
  100 l/min

- Forms the basis for compact pneumatic control systems
- M5 elements with 2n sub-bases
- Control cabinet installation
- Easy mounting
- Fast replacement of components
- Barbed fitting connection for 3 mm plastic tubing

The M5 Compact System is a complete system offering control components with all the functions required for pneumatic sequence controls. These all feature 2n sub-bases and barbed fitting connections for 3 mm plastic tubing.

For basic valves and actuators for panel mounting for use as signal components for basic functions such as START, STOP, etc.

➔ Internet: sv

M5 Compact System

Key features

Mounting the components

Each mounting frame can be used to mount up to 16 components of the M5 Compact System using 2N sub-bases. The frames are 480 mm long and have been designed for use with 19" housings to DIN 41 488. The rails can be shortened to allow for other types of installation.

Components are attached by sliding their sub-bases or mounting plates into the guide slot of the profile rails. The sub-bases or plates are then clamped between the cross bars.

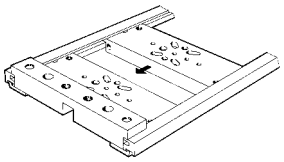

They can also be placed onto the frame and screwed down individually.

M5 Compact System

Product range overview

Function	Version	Type	Brief description	Operating pressure [bar]	➔ Page/Internet
Solenoid valves	**3/2-way valves**				
	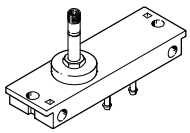	MUFH-3-PK-3	Mechanical spring return for mounting frame 2N	0 … 8	6
	5/2-way valves				
	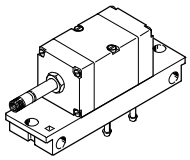	MFH-5-PK-3	Mechanical spring return for mounting frame 2N	3 … 8	6
		MFH-5-PK-3-L	Pneumatic spring return for mounting frame 2N	1.5 … 8	6
	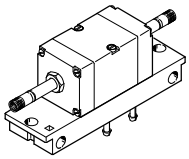	JMFH-5-PK-3	Double solenoid valve for mounting frame 2N	2 … 8	6
Pneumatic valves	**3/2-way valves**				
	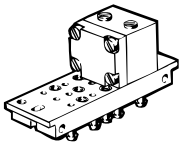	VL/O-3-PK-3	Mechanical spring return for mounting frame 2N	0 … 8	10
	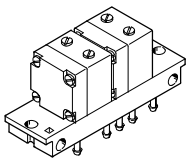	VL/O-3-PK-3x2	2 pneumatic valves on one sub-base Mechanical spring return for mounting frame 2N	0 … 8	10
	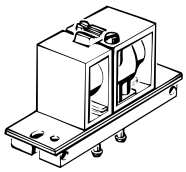	J-3-PK-3	Double pilot valve for mounting frame 2N	–0.9 … 8	10
	5/2-way valves				
	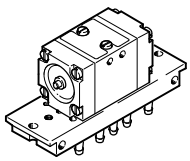	VL-5-PK-3	Mechanical spring return for mounting frame 2N	0 … 8	10
		J-5-PK-3	Double pilot valve for mounting frame 2N	1 … 8	10
		JD-5-PK-3	Double pilot valve with dominating signal at 14 for mounting frame 2N	1 … 8	10

M5 Compact System

Product range overview

Function	Version	Type	Brief description	Operating pressure [bar]	➔ Page/Internet
Time delay valves	**Time delay valves**				
	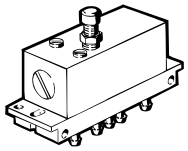	VZ-3-PK-3	With switch-on delay for mounting frame 2N	2.5 … 8	13
		VZO-3-PK-3	With switch-off delay for mounting frame 2N	2.5 … 8	13
Logic components	**AND/OR blocks**				
	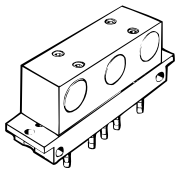	OS-PK-3-6/3	3 OR gates for mounting frame 2N	1.6 … 8	15
		ZK-PK-3-6/3	3 AND gates for mounting frame 2N	1.6 … 8	15
	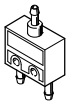	OS-PK-3	OR gate	1.6 … 8	25
		ZK-PK-3	AND gate	1.6 … 8	25
	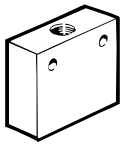	OS-⅛-B	OR gate	1 … 10	25
		ZK-⅛-B	AND gate	1 … 10	25
		OS-¼-B	OR gate	1 … 10	25
		OS-½	OR gate	1 … 10	25
One-way flow control valves	**One-way flow control valves**				
	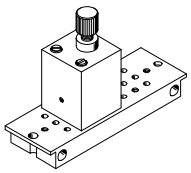	GRF-PK-3	For mounting frame 2N	0.5 … 8	16
	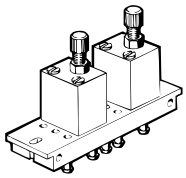	GRF-PK-3x2	2 one-way flow control valves on one sub-base for mounting frame 2N	0.5 … 8	16
PE converters	**Pneumatic/electrical pressure transducers**				
	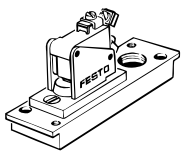	PE-⅛-2N	For mounting frame 2N	0 … 8	18
	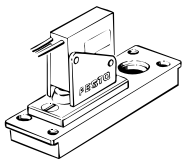	PE-⅛-2N-SW	Splash proof design for mounting frame 2N	0 … 8	18

M5 Compact System

Product range overview

Function	Version	Type	Brief description	Operating pressure [bar]	➔ Page/Internet
PE converters	**Pneumatic/electrical pressure transducers**				
	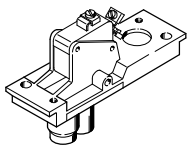	VPE-⅛-2N	Vacuum switch for mounting frame 2N	–0.95 … 0	18
	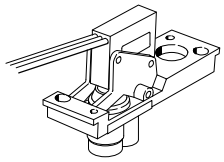	VPE-⅛-2N-SW	Vacuum switch splash proof design for mounting frame 2N	–0.95 … 0	18
	Pneumatic/electrical differential pressure switch				
	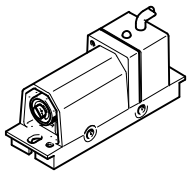	PEN-M5	For mounting frame 2N	–1 … 8	22
Pneumatic counters	**Adding counters**				
	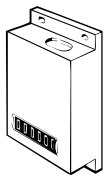	PZA-A-B	Base mounting	2 … 8	27
	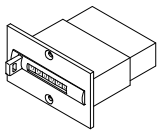	PZA-E-C	Panel mounting	2 … 8	27
	Predetermining counter				
	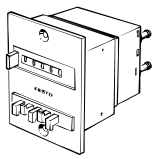	PZV-E-C	Panel mounting	2 … 8	27
Pneumatic timer	**Pneumatic timer**				
	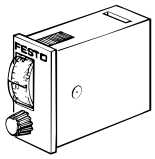	PZVT-3-C PZVT-30-C PZVT-12-C PZVT-300-C	Clamping frame	2 … 6	33
		PZVT-AUT	Automatic reset module	2 … 6	33

Solenoid valves MUFH/MFH/JMFH, for mounting frame 2N

Technical data

3/2-way valves
MUFH-3-PK-3

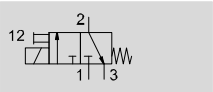

Flow rate
50 l/min

Operating pressure
0 ... 8 bar

5/2-way valves
MFH-5-PK-3

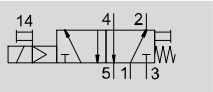

JMFH-5-PK-3

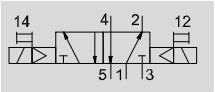

MFH-5-PK-3-L

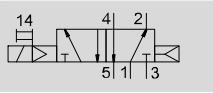

Flow rate
105 l/min

Operating pressure
1.5 ... 8 bar

General technical data					
Type		3/2-way valves	5/2-way valves		
		MUFH-3-PK-3	MFH-5-PK-3	MFH-5-PK-3-L	JMFH-5-PK-3
Pneumatic connection 1, 2		PK-3			
Pneumatic connection 3		M5	PK-3		
Pneumatic connection 4, 5		–	PK-3		
Nominal size	[mm]	1.3	2.5		
Design		Poppet seat			
Type of mounting		On sub-base			
		On mounting frame			
		Via through-hole			
Mounting position		Any			
Valve function		3/2-way valve, closed, single-solenoid	5/2-way valve, single-solenoid	5/2-way valve, single-solenoid	5/2-way valve, double-solenoid
Sealing principle		Soft			
Response time Off	[ms]	22	22	22	–
On	[ms]	15	10	14	–
Changeover	[ms]	–	–	–	13

Operating and environmental conditions					
Type		3/2-way valves	5/2-way valves		
		MUFH-3-PK-3	MFH-5-PK-3	MFH-5-PK-3-L	JMFH-5-PK-3
Operating pressure	[bar]	0 ... 8	3 ... 8	1.5 ... 8	2 ... 8
Operating/pilot medium		Compressed air to ISO 8573-1:2010 [7:–:–]			
Ambient temperature	[°C]	–5 ... +40	–5 ... +40	–5 ... +40	0 ... +40
Temperature of medium	[°C]	–10 ... +60	–10 ... +60	–10 ... +60	0 ... +60
Certification		c CSA us (OL)	–	–	–

Solenoid valves MUFH/MFH/JMFH, for mounting frame 2N

Technical data

Materials				
Type	3/2-way valves	5/2-way valves		
	MUFH-3-PK-3	MFH-5-PK-3	MFH-5-PK-3-L	JMFH-5-PK-3
Housing	Anodised aluminium			
Sub-base	Anodised aluminium			
Seals	NBR			
Note on materials	–	RoHS-compliant	RoHS-compliant	RoHS-compliant

Dimensions – 3/2-way valves Download CAD data ➔ **www.festo.com**

MUFH-3-PK-3

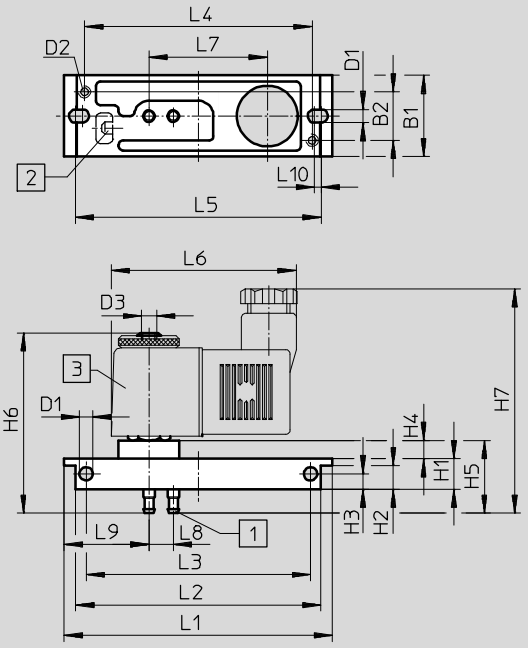

1 Barbed fitting PK-3 for plastic tubing
2 Manual override
3 Rotatable solenoid coil

Type	B1	B2	D1 ∅	D2	D3	H1	H2	H3	H4	H5	H6	H7	L1	L2	L3	L4	L5	L6	L7	L8	L9	L10
MUFH	26.8	16	4.5	M4	M5	10	7.7	5	6	27	58	~72	88.5	80.8	74	75	81	61	39	8	28	2.3

Dimensions – 5/2-way valves Download CAD data ➔ **www.festo.com**

MFH-5-PK-3(-L)

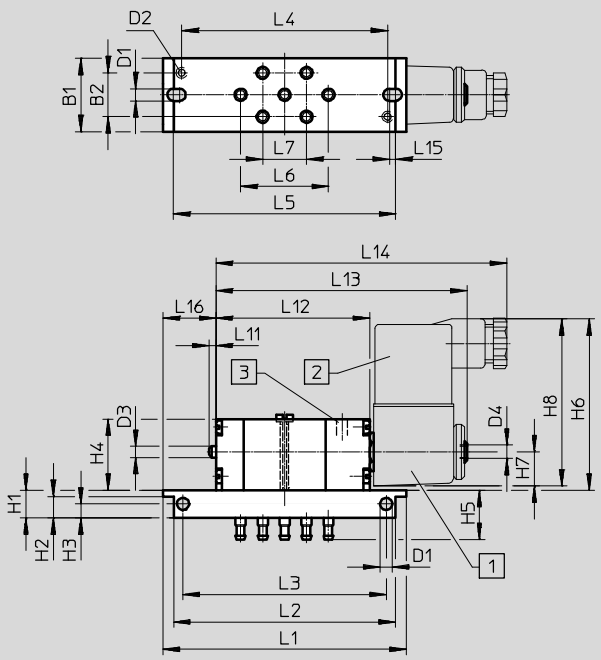

1 Rotatable solenoid coil
2 Plug can be repositioned by 180°
3 Manual override

JMFH-5-PK-3

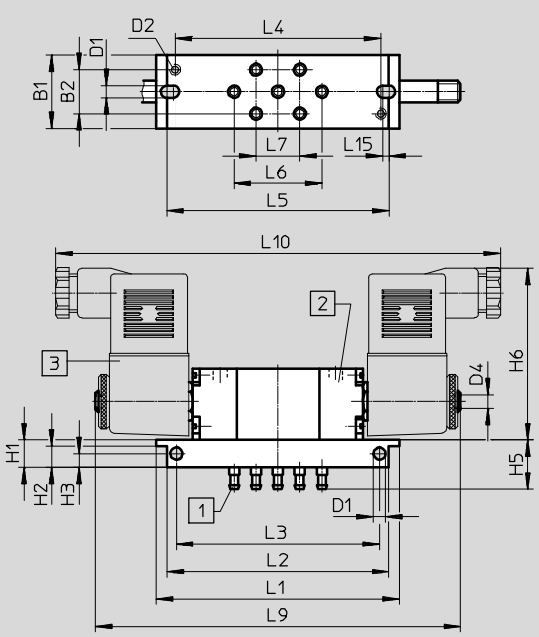

1 Barbed fitting PK-3 for plastic tubing
2 Manual override
3 Rotatable solenoid coil

Type	B1	B2	D1 ∅	D2	D3 ∅	D4	H1	H2	H3	H4	H5	H6	H7	H8
MFH	26.8	16	4.4	M4	4	M5	10	7.7	5	26	18.5	62.5	12.5	61
JMFH					–					–			–	–

Type	L1	L2	L3	L4	L5	L6	L7	L9	L10	L11	L12	L13	L14	L15	L16
MFH	88.5	80.8	74	75	81	32	16	–	–	2.5	56	~90	~106	2.3	19
JMFH								133	162	–	–	–	–		–

Ordering data

	Function	Pneumatic connection	Standard nominal flow rate qnN [l/min]	Weight [g]	Part No.	Type
3/2-way valves						
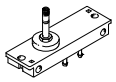	Closed, single-solenoid, mechanical spring return	PK-3, M5	50	120	**6705**	**MUFH-3-PK-3**
5/2-way valves						
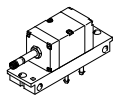	Single-solenoid, mechanical spring return	PK-3	105	270	**4448**	**MFH-5-PK-3**
	Single-solenoid, pneumatic spring return	PK-3	105	270	**11546**	**MFH-5-PK-3-L**
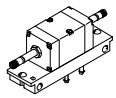	Double-solenoid	PK-3	105	380	**4447**	**JMFH-5-PK-3**

Ordering data – Solenoid coil MSFG/MSFW				Technical data ➔ Internet: msf
	Description	Operating voltage	Part No.	Type
Plug connector to industry standard, type B				
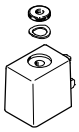	Without plug socket	12 V DC	**34410**	**MSFG-12DC-OD**
		24 V DC, 42 V AC	**34411**	**MSFG-24/42-50/60-OD**
		42 V DC	**34413**	**MSFG-42DC-OD**
		24 V AC	**34415**	**MSFW-24AC-OD**
		48 V AC	**34418**	**MSFW-48AC-OD**
		110 V AC	**34420**	**MSFW-110AC-OD**
		230 V AC	**34422**	**MSFW-230AC-OD**
		240 V AC	**34424**	**MSFW-240AC-OD**
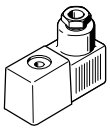	With plug socket	12 V DC	**4526**	**MSFG-12**
		24 V DC, 42 V AC	**4527**	**MSFG-24/42-50/60**
		24 V AC	**4534**	**MSFW-24-50/60**
		110 V AC	**6720**	**MSFW-110-50/60**
		230 V AC	**4540**	**MSFW-230-50/60**
Plug connector to EN 175301, type A				
	Without plug socket	24 V DC, 42 V AC	**34412**	**MSFG-24/42-50/60-DS-OD**
		230 V AC	**175118**	**MSFW-230-50/60-DS-OD**
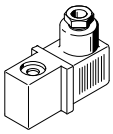	With plug socket, plug connector can be repositioned by 180° Certification: Germanischer Lloyd	24 V DC, 42 V AC	**13264**	**MSFG-24/42-50/60-DS**
		110 V AC	**13265**	**MSFW-110-50/60-DS**
		230 V AC	**13266**	**MSFW-230-50/60-DS**

Pneumatic valves VL/J, for mounting frame 2N

Technical data

3/2-way valves

VL/O-3-PK-3

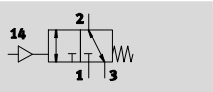

VL/O-3-PK-3x2

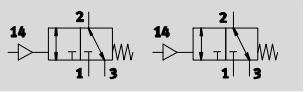

- Flow rate 100 l/min
- Temperature range −10 … +6 0°C
- Operating pressure 0 … 8 bar

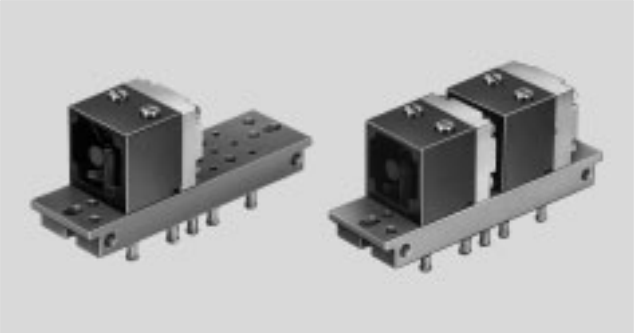

J-3-PK-3

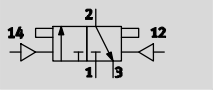

- Flow rate 100 l/min
- Temperature range −10 … +60 °C
- Operating pressure −0.9 … 8 bar

5/2-way valves

VL-5-PK-3

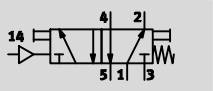

JD-5-PK-3

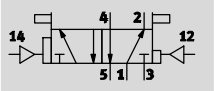

J-5-PK-3

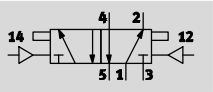

- Flow rate 105 l/min
- Operating pressure 0 … 8 bar

General technical data							
Type		3/2-way valves			5/2-way valves		
		VL/O-3-PK-3	VL/O-3-PK-3x2	J-3-PK-3	VL-5-PK-3	J-5-PK-3	JD-5-PK-3
Pneumatic connection 1 … 5		PK-3					
Auxiliary pilot air port 12		–	–	PK-3	–	PK-3	PK-3
Auxiliary pilot air port 14		PK-3					
Nominal width	[mm]	2.5					
Design		Poppet seat	Poppet seat	Piston spool valve	Poppet seat	Poppet seat	Poppet seat
Type of mounting		On sub-base					
		On mounting frame					
		With through-hole					
Mounting position		Any					
Valve function		3/2-way valve, open, monostable	3/2-way valve, open, monostable	3/2-way valve, bistable	5/2-way valve, monostable	5/2-way valve, bistable	5/2-way valve, bistable, dominant[1)]
Switching time	Off [ms]	50	50	–	22	–	
	On [ms]	12	12	–	15	–	
	Changeover [ms]	–	–	7	–	9	9
	Changeover (dominant) [ms]	–	–	–	–	–	25

1) Dominant signal at 14.

Operating and environmental conditions							
Type		3/2-way valves			5/2-way valves		
		VL/O-3-PK-3	VL/O-3-PK-3x2	J-3-PK-3	VL-5-PK-3	J-5-PK-3	JD-5-PK-3
Operating pressure	[bar]	0 … 8	0 … 8	−0.9 … 8	0 … 8	1 … 8	1 … 8
Pilot pressure	[bar]	See diagram					
Operating/pilot medium		Compressed air to ISO 8573-1:2010 [7:−:−]					
Note on operating/pilot medium		Lubricated operation possible (in which case lubricated operation will always be required)					
Ambient temperature	[°C]	−10 … +60	−10 … +60	−10 … +60	−10 … +60	0 … +60	0 … +60
Temperature of medium	[°C]	−10 … +60	−10 … +60	−10 … +60	−10 … +60	0 … +60	0 … +60

Materials						
Type	3/2-way valves			5/2-way valves		
	VL/O-3-PK-3	VL/O-3-PK-3x2	J-3-PK-3	VL-5-PK-3	J-5-PK-3	JD-5-PK-3
Housing	Plastic, die-cast zinc					
Sub-base	Brass, PPS-reinforced					
Seals	NBR					
Note on materials	–	–	Contains PWIS (paint-wetting impairment substances)	RoHS-compliant	RoHS-compliant	RoHS-compliant

Minimum pilot pressure p2 as a function of operating pressure p1

3/2-way valves

VL/O-3-PK-3, VL/O-3-PK-3x2

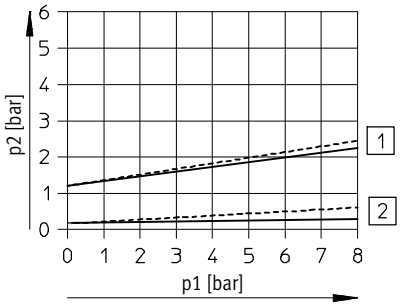

J-3-PK-3

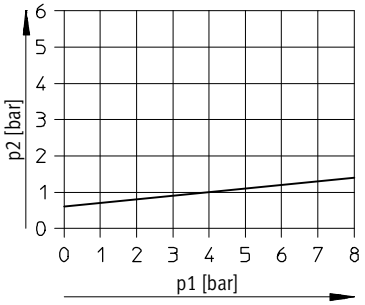

——— Exhaust throttled

- - - - - Exhaust unthrottled

1 Switch-on pressure

2 Switch-off pressure

5/2-way valves

VL-5-PK-3

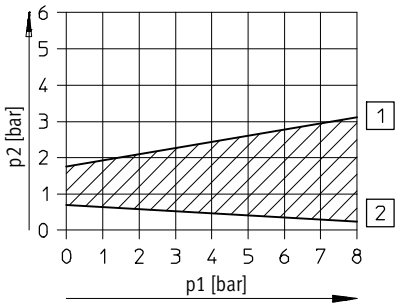

1 Switch-on pressure

2 Switch-off pressure

J-5-PK-3, JD-5-PK-3

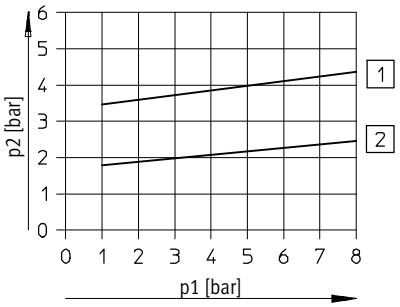

1 JD-5-PK-3

2 J-5-PK-3

Dimensions Download CAD data ➔ **www.festo.com**

3/2-way valves

VL/O-3-PK-3, VL/O-3-PK-3x2

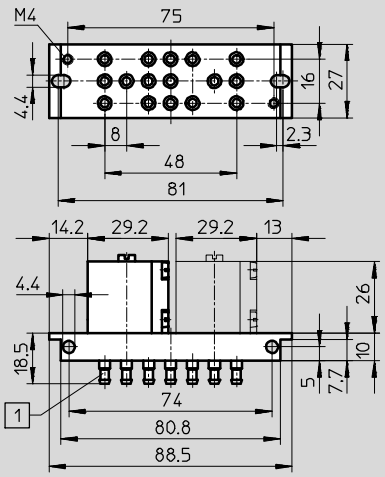

1 Barbed connector for plastic tubing PK-3

J-3-PK-3

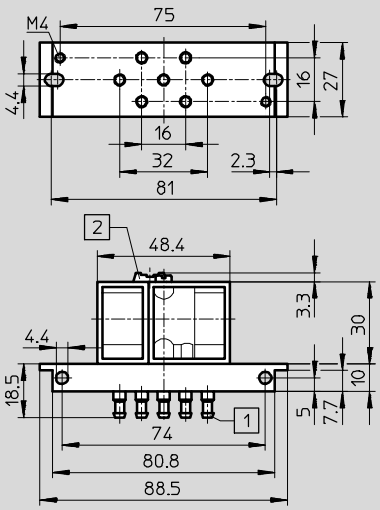

1 Barbed connector for plastic tubing PK-3
2 Manual override

5/2-way valves

VL-5-PK-3, J-5-PK-3, JD-5-PK-3

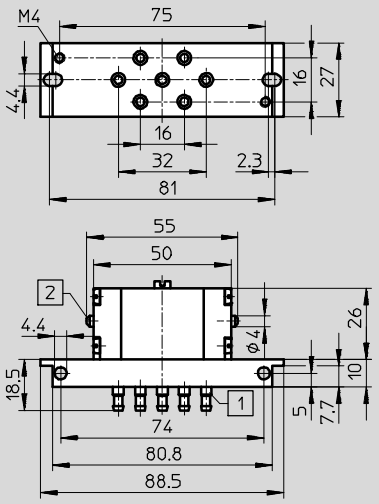

1 Barbed connector for plastic tubing PK-3
2 Manual override

Ordering data

Function	Pneumatic connection	Standard nominal flow rate qnN [l/min.]	Weight [g]	Part No.	Type
3/2-way valves					
Open, monostable (1 valve)	PK-3	100	110	**4233**	**VL/O-3-PK-3**
Open, monostable (2 valves)			180	**4245**	**VL/O-3-PK-3x2**
Bistable			75	**10772**	**J-3-PK-3**
5/2-way valves					
Monostable	PK-3	105	130	**4504**	**VL-5-PK-3**
Bistable			130	**4503**	**J-5-PK-3**
Bistable, dominant[1)]			130	**4901**	**JD-5-PK-3**

1) Dominant signal at 14.

Time delay valves VZ/VZO, for mounting frame 2N

Technical data

VZ, with switch-on delay

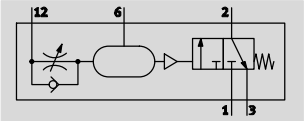

VZO, with switch-off delay

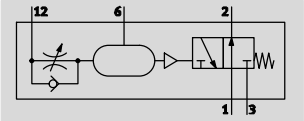

- Flow rate
  60 … 90 l/min
- Temperature range
  –10 … +60 °C
- Operating pressure
  2.5 … 8 bar

The time delay valve consists of a pneumatically actuated 3-way valve and an upstream throttle with additional volume. The directional control valve is activated with a delay depending on the setting of the throttle. It is reset via a mechanical spring.

General technical data		
Type	VZ	VZO
Pneumatic port	PK-3	
Nominal width [mm]	2	
Design	Poppet valve with spring return	
Type of actuation	Pneumatic	
Type of mounting	Front panel mounting	
	On mounting frame	
Mounting position	Any	
Valve function	3/2-way valve, closed, monostable	3/2-way valve, open, monostable
Non-overlapping	No	
Manual override	None	
Exhaust-air function	With flow control	
Type of control	Direct	
Pilot air supply	External	
Direction of flow	Non-reversible	
Sealing principle	Soft	
Adjustable delay time[1] [s]	0.25 … 5	
Pause period for reset [ms]	≥ 55	≥ 50
Repetition accuracy of time setting [s]	±0.5	

1) To achieve delay times that are longer than 5s, an additional volume can be connected to barbed connector 6 once the end cap has been removed. A 10 cm³ increase in volume will lengthen the time delay by approx. 5 s. Air pressure reservoir VZS ➔ Internet: vzs

Operating and environmental conditions	
Operating pressure [bar]	2.5 … 8
Operating/pilot medium	Compressed air to ISO 8573-1:2010 [7:4:4]
Note on operating/ pilot medium	Lubricated operation not possible
Ambient temperature [°C]	–10 … +60
Temperature of medium [°C]	–10 … +60

Materials	
Housing	Die-cast zinc
Seals	Nitrile rubber
Note on materials	RoHS-compliant

Time delay valves VZ/VZO, for mounting frame 2N

Technical data

Minimum pilot pressure p2 as a function of the operating pressure p1

VZ

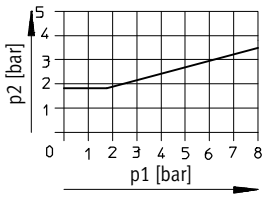

VZO

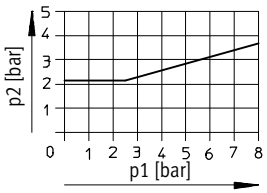

Dimensions Download CAD data ➔ **www.festo.com**

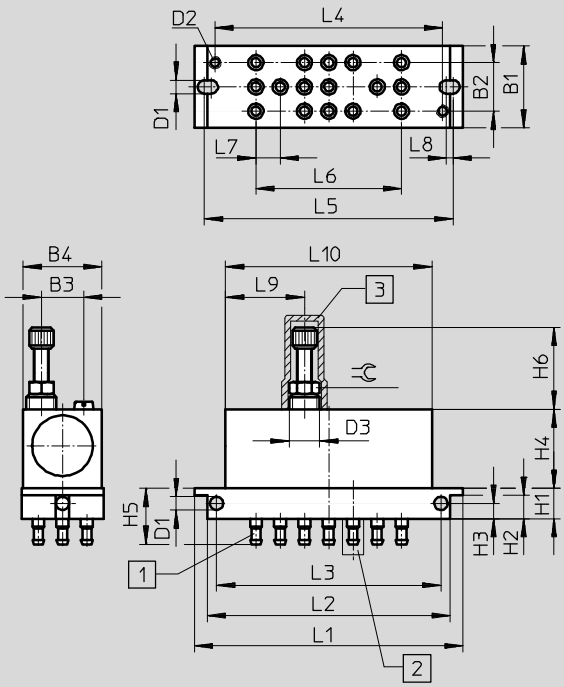

1 Barbed fitting for plastic tubing PK-3
2 Port 6 with end cap, for additional volume
3 Protective cap

B1	B2	B3	B4	D1 ∅	D2	D3	H1	H2	H3	H4	H5
27	16	14	26	4.4	M4	M10x1	10	7.7	5	26	18.5

H6 Min.	L1	L2	L3	L4	L5	L6	L7	L8	L9	L10	⊂⊃
27	88.5	80.8	74	75	81	48	8	2.3	26	68	8

Ordering data

Function	Pneumatic port	Standard nominal flow rate qnN [l/min.]	Weight [g]	Part No.	Type
With switch-on delay	PK-3	90	150	**5755**	**VZ-3-PK-3**
With switch-off delay		60	150	**5754**	**VZO-3-PK-3**

Ordering data for accessories

Description		Part No.	Type
Cover cap	Tamper-proof protective cap	**6436**	**GRK-M5**

AND/OR blocks OS/ZK, for mounting frame 2N

Technical data

General technical data			
		OS-PK-3-6/3	ZK-PK-3-6/3
Valve function		OR function	AND function
Nominal size	[mm]	2.5	2.5
Mounting position		Any	
Type of mounting		Via through-holes, front panel mounting, on mounting frame	
Operating medium		Compressed air in accordance with ISO 8573-1:2010 [7:4:4]	
Note on operating/pilot medium		Operation with lubricated medium possible (in which case lubricated operation will always be required)	
Pneumatic connection	[mm]	PK-3 for 3 mm tubing I.D.	
Standard nominal flow rate	[l/min]	100	
Information on housing materials		POM	POM
Information on seals materials		NBR	NBR
Weight	[g]	90	85

Operating and environmental conditions		
Operating pressure	[bar]	1.6 ... 8
Ambient temperature	[°C]	–10 ... +60
Medium temperature	[°C]	–10 ... +60

Dimensions Download CAD data ➔ **www.festo.com**

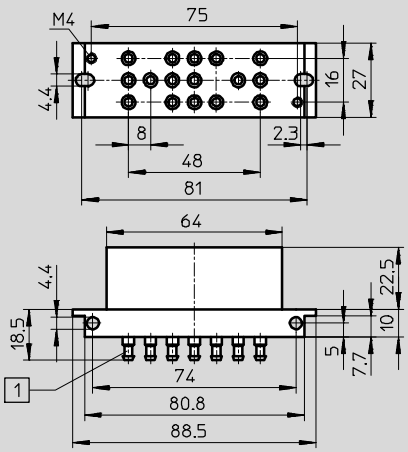

1 Barbed fitting for 3 mm tubing I.D.

Ordering data		Part No.	Type
OR block (3 OR gates)	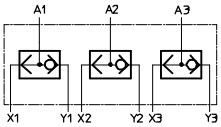	**4232**	**OS-PK-3-6/3**
AND block (3 AND gates)	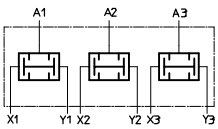	**4204**	**ZK-PK-3-6/3**

One-way flow control valves GRF, for mounting frame 2N

Technical data

One-way flow control function

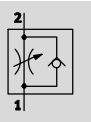

Flow rate
45 l/min

Temperature range
–10 ... +60 °C

Operating pressure
0.5 ... 8 bar

General technical data	
Valve function	One-way flow control function
Pneumatic connection 2	PK-3
Pneumatic connection 1	PK-3
Adjusting element	Knurled screw
Type of mounting	With through-hole
Mounting position	Any

Operating and environmental conditions		
Operating pressure	[bar]	0.5 ... 8
Operating medium		Compressed air according to ISO 8573-1:2010 [7:–:–]
Note on operating/pilot medium		Lubricated operation possible (in which case lubricated operation will always be required)
Ambient temperature	[°C]	–10 ... +60
Temperature of medium	[°C]	–10 ... +60

Standard nominal flow rate qnN at 6 › 5 bar as a function of turns of the adjusting screw n

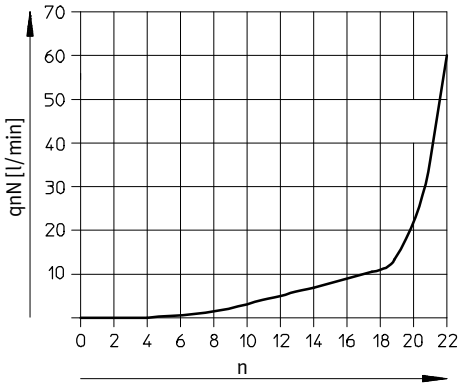

One-way flow control valves GRF, for mounting frame 2N

Technical data

Materials

Sectional view

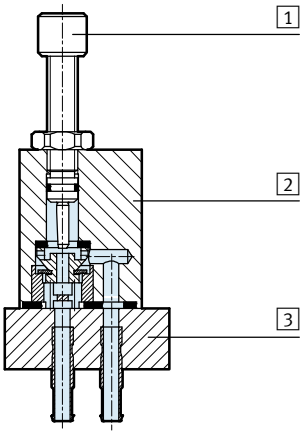

One-way flow control valve		
1	Regulating screw	Brass
2	Housing	Wrought aluminium alloy
3	Connecting plate	PA
–	Seals	NBR

Dimensions

Download CAD data ➔ **www.festo.com**

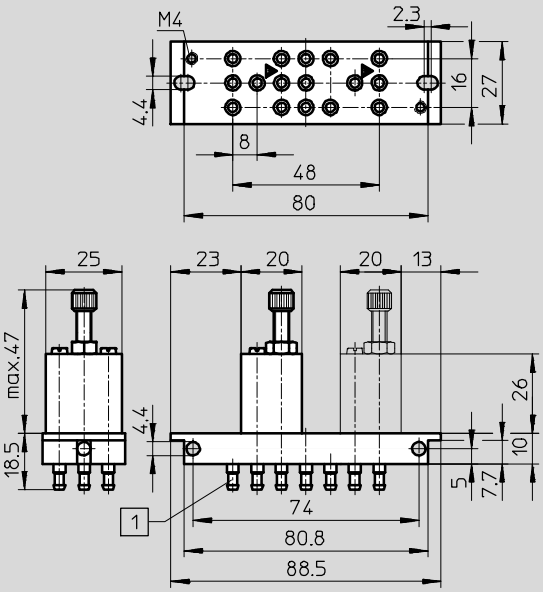

1 Barbed connector PK-3

Ordering data – One-way flow control function

	Pneumatic connection		Standard nominal flow rate qnN [l/min] at 6 bar ⇢ 5 bar		Number of one-way flow control valves	Weight [g]	Part No.	Type
	2	1	In direction of flow control	In non-return direction				
Knurled screw								
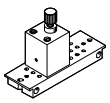	PK-3	PK-3	45	45	1	95	**4565**	**GRF-PK-3**
					2	145	**4566**	**GRF-PK-3X2**

PE converters PE/VPE, for mounting frame 2N

Technical data

General technical data				
	PE converter		Vacuum switch	
	PE-⅛-2N	PE-⅛-2N-SW	VPE-⅛-2N	VPE-⅛-2N-SW
Method of measurement	Pneumatic/electric pressure transducer			
Measured variable	Relative pressure			
Type of mounting	On mounting frame 2N			
	With through-hole			
Mounting position	Any			
Pneumatic connection	G⅛			
Electrical connection	Screw terminal	3 connector leads	Screw terminal	3 connector leads
Materials				
Housing	Die-cast aluminium, PA, steel		POM, steel, PET	PA, POM, steel, VMQ
Diaphragm	TPE-U(PU)		CR	
Switch contact	Silver		Silver	
Electrical connection	Brass	Tin-plated	Brass	Tin-plated
Cable sheath	–	PVC	–	
Weight [g]	55	65	32	45

Note: This product conforms to ISO 1179-1 and to ISO 228-1

Operating and environmental conditions				
	PE converter		Vacuum switch	
	PE-⅛-2N	PE-⅛-2N-SW	VPE-⅛-2N	VPE-⅛-2N-SW
Operating medium	Compressed air in accordance with ISO 8573-1:2010 [7:4:4]			
Note on operating/pilot medium	Operation with lubricated medium possible (in which case lubricated operation will always be required)			
Operating pressure [bar]	0 … 8		0 … –0,95	
Switch-on pressure [bar]	2		–0,25	
Switch-off pressure [bar]	0,5		≤ 0,1	
Ambient temperature [°C]	0 … +60			
Temperature of medium [°C]	0 … +60			

Electrical data				
	PE converter		Vacuum switch	
	PE-⅛-2N	PE-⅛-2N-SW	VPE-⅛-2N	VPE-⅛-2N-SW
Operating voltage range AC [V AC]	12 … 250			
Operating voltage range DC [V DC]	12 … 250			
Switching element function	Changeover contact			
Switching output	Contacting		–	
Switching function	Threshold value with fixed hysteresis		–	
Minimum load current [mA]	100			
Max. switching frequency [Hz]	1			
CE marking (see declaration of conformity)	To EU Low Voltage Directive			
Approval certificate	CCC			
Degree of protection	IP00 (IP20)[1]	IP67	IP00 (IP20)[1]	IP67

1) With protective cap SPE-B

PE converters PE/VPE, for mounting frame 2N

Technical data

Max. permissible electrical load					
DC voltage			AC voltage		
Voltage [V DC]	Resistance load [A]	Inductive load [A]	Voltage [V AC]	Resistance load [A]	Inductive load [A]
PE/VPE-⅛-2N					
12	6	6	250	6	2
24	6	6	250	6	2
60	1	0.5			
110	0.5	0.2			
220	0.25	0.1			
PE/VPE-⅛-2N-SW					
15	10	10	125	5	5
30	5	3	250	5	2
50	1	1			
75	0.75	0.25			
124	0.5	0.03			
250	0.25	0.02			

Pin allocation

Changeover contact

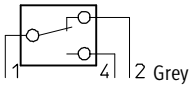

Black Blue

N/O contact

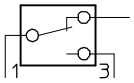

Black Blue

N/C contact

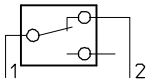

Black Grey

Dimensions Download CAD data ➔ **www.festo.com**

PE converter

PE-⅛-2N

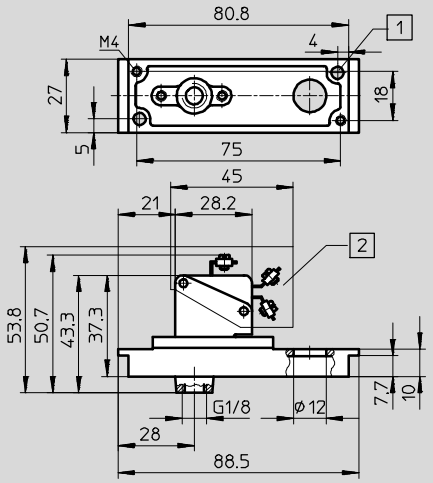

1 For M4 thread

2 Protective cap SPE-B

Note: This product conforms to ISO 1179-1 and to ISO 228-1

PE-⅛-2N-SW

Splash-proof design

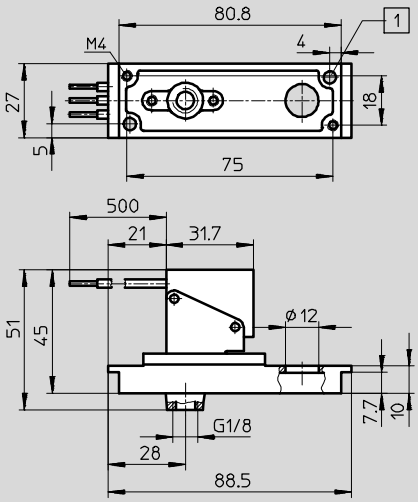

1 For M4 thread

Note: This product conforms to ISO 1179-1 and to ISO 228-1

Vacuum switch

VPE-⅛-2N

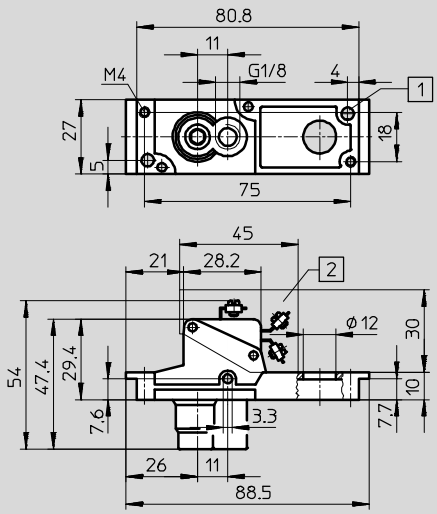

1 For M4 thread

2 Protective cap SPE-B

Note: This product conforms to ISO 1179-1 and to ISO 228-1

VPE-⅛-2N-SW

Splash-proof design

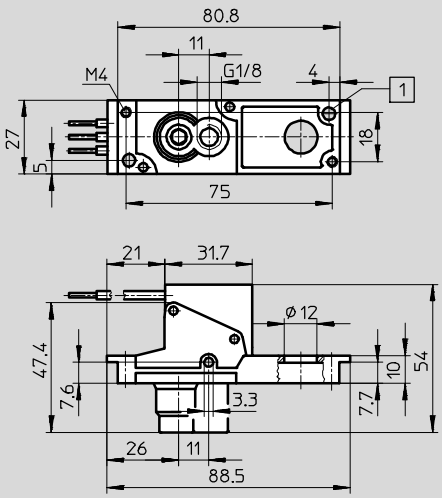

1 For M4 thread

Note: This product conforms to ISO 1179-1 and to ISO 228-1

PE converters PE/VPE, for mounting frame 2N

Technical data

Ordering data			
		Part No.	Type
PE converter	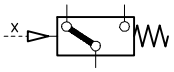	**7860**	**PE-⅛-2N**
PE converter Splash-proof design	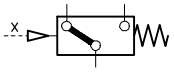	**7862**	**PE-⅛-2N-SW**
Vacuum switch	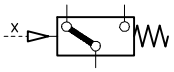	**12594**	**VPE-⅛-2N**
Vacuum switch Splash-proof design	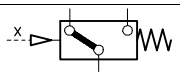	**12595**	**VPE-⅛-2N-SW**
Accessories			
Protective cap for protection against accidental contact		**165614**	**SPE-B**

PE converters PEN-M5, for mounting frame 2N

Technical data

Function

Temperature range
−20 … +60 °C

Operating pressure
−1 … +8 bar

General technical data		
Certification		RCM mark
CE marking (see declaration of conformity)		To EU EMC Directive[1)]
Note on materials		RoHS-compliant
		Free of copper and PTFE

1) For information about the applicability of the component see the manufacturer's EC declaration of conformity at: www.festo.com/sp ➔ User documentation.
If the component is subject to restrictions on usage in residential, office or commercial environments or small businesses, further measures to reduce the emitted interference may be necessary.

Input signal/measuring element		
Measured variable		Relative pressure (overpressure: connection to P1/vacuum: connection to P2)
		Differential pressure (connection P1 and P2, condition: P1 ≥ P2)
Method of measurement		Pneumatic/electrical differential pressure switch
Operating pressure	[bar]	−1 … +8
Operating medium		Compressed air to ISO 8573-1:2010 [7:4:4]
Note on operating/pilot medium		Lubricated operation possible (in which case lubricated operation will always be required)
Temperature of medium	[°C]	−20 … +60
Ambient temperature	[°C]	−20 … +60

Switching output		
Switching output		PNP
Switching element function		N/O contact
Threshold value setting range	[bar]	−0.8 … +8
Max. switching frequency	[Hz]	70
Max. output current	[mA]	350

Output, additional data		
Protection against short circuit		Yes

Electronics		
Operating voltage range	[V DC]	12 … 30

Electromechanics		
Electrical connection		Cable, 3-wire, open end
Cable length	[m]	2.5

Mechanical system	
Type of mounting	On mounting frame 2N
	With through-hole
Mounting position	Any
Pneumatic connection	M5
Information on housing materials	Die-cast zinc

PE converters PEN-M5, for mounting frame 2N

Technical data

Display/operation	
Switching status indication	Yellow LED

Immission/emission	
Degree of protection	IP67

Hysteresis H as a function of the differential pressure Δp

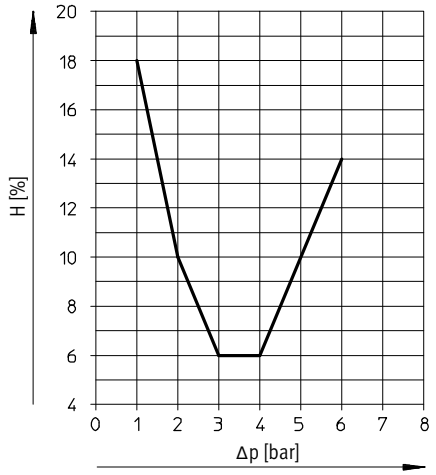

Dimensions

Download CAD data ➔ **www.festo.com**

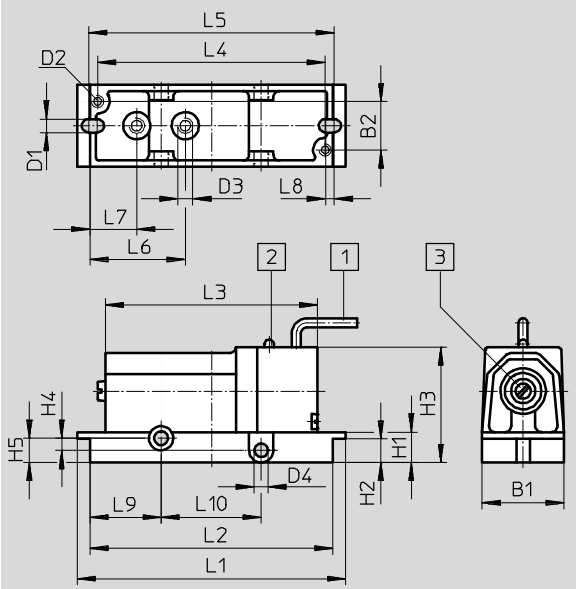

1 Cable: 3 x 0.14 mm², 2.5 m long
2 Yellow LED
3 Pressure threshold setting

Colour coding:
BN = 24 V
BU = 0 V
BK = switching output
The switch is protected against polarity reversal

B1	B2	D1 ∅	D2	D3	D4 ∅	H1	H2	H3	H4	H5	L1	L2	L3	L4	L5	L6	L7	L8	L9	L10
27	16	4.4	M4	M5	4.5	10	7.7	37	3	8	88.5	80.8	70	75	81	31.4	15.4	2.9	23.4	33

Ordering data

	Pneumatic connection	Electrical connection	Cable length [m]	Weight [g]	Part No.	Type
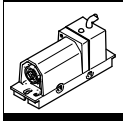	M5	Cable, 3-wire, open end	2.5	240	**8625**	**PEN-M5**

Mounting frame NRRQ-2N

Scope of delivery
2 x connecting piece NRV-2N
2 x mounting rail NRQ-8-480
4 x mounting bracket NRW-12/3
4 x threaded spacer NRB-12/60
4 x slotted head screw
DIN 84-M6X18-4.8
4 x slotted head screw
DIN 84-M6X12-4.8
4 x mounting bracket NRW-9/1,5-B
4 x slotted head screw
DIN 84-M4X10-4.8

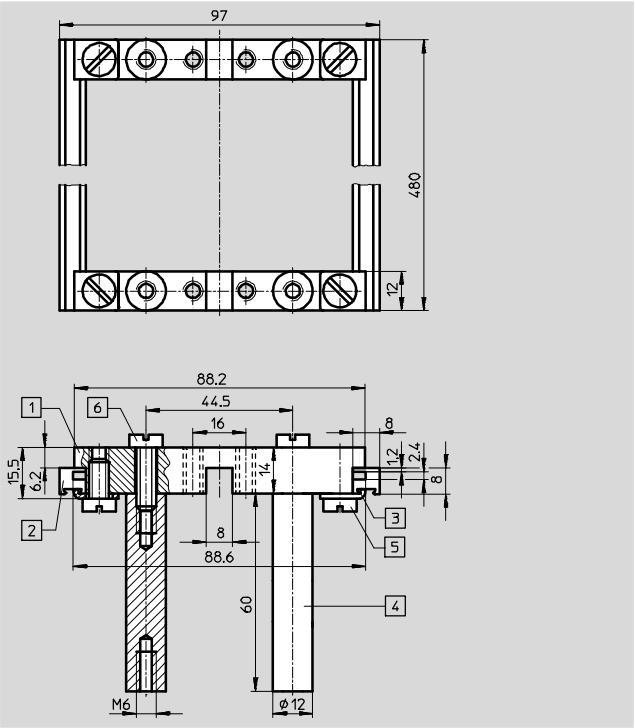

1 Connecting piece NRV-2N
2 Mounting rail NRQ-8-480
3 Mounting bracket NRW-12/3
4 Threaded spacer NRB-12/60
5 Slotted head screw
DIN 84-M6X18-4.8
6 Slotted head screw
DIN 84-M6X12-4.8

Mounting frame	Part No.	Type
Mounting frame 2N complete for 16 components	**9365**	**NRRQ-2N**
Accessories		
Mounting bracket for mounting sub-bases on the frame	**11571**	**NRW-9/1,5-B**
Slotted head screw (2 included in scope of delivery)	**204021**	**DIN 84-M4X12-4.8**

AND/OR gates OS/ZK

Technical data

AND gate ZK

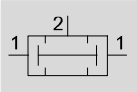

OR gate OS
OS-PK-3
OS-⅛/¼-B

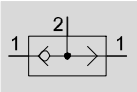

OS-½

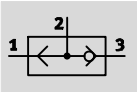

Flow rate
120 … 5000 l/min

Temperature range
−10 … +60 °C

Operating pressure
1 … 10 bar

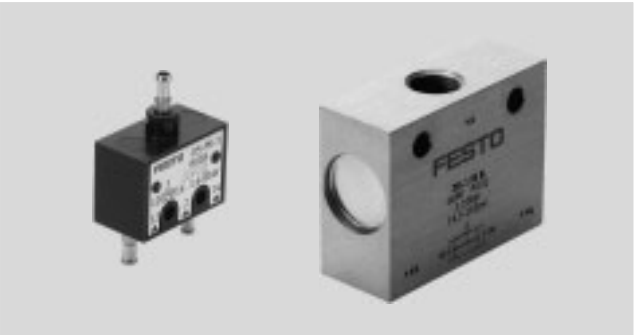

Valve function

AND function

For an AND gate, all input signals must be active at the same time in order to execute a function.
The AND gate ZK has two inputs X, Y and one output A. The output A is only pressurised if pressure is supplied to both inputs at the same time. If different pressures are present at the inputs, the lower pressure is fed to output A.

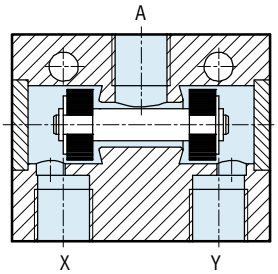

OR function

For an OR gate, at least one of all the input signals must be active in order to execute a function.
The OR gate OS has two inputs X, Y and one output A. The output A is pressurised if pressure is supplied to at least one of the two inputs. The valve automatically blocks the input which is not pressurised. If both inputs are simultaneously supplied with different pressures, the higher pressure is fed to output A.

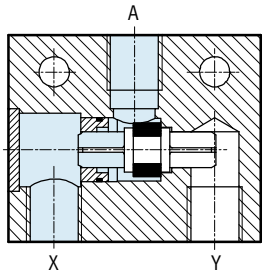

General technical data							
Valve function		AND function		OR function			
Type		ZK-PK-3	ZK-⅛-B	OS-PK-3	OS-⅛-B	OS-¼-B	OS-½
Pneumatic connection		PK-3	G⅛	PK-3	G⅛	G¼	G½
Nominal size	[mm]	2.4	4.5	2.4	4	6.5	12
Type of mounting		With through-hole					
Mounting position		Any					

Note: This product conforms to ISO 1179-1 and to ISO 228-1

Operating and environmental conditions							
Type		ZK-PK-3	ZK-⅛-B	OS-PK-3	OS-⅛-B	OS-¼-B	OS-½
Operating pressure	[bar]	1.6 … 8	1 … 10	1.6 … 8	1 … 10	1 … 10	1 … 10
Operating/pilot medium		Compressed air to ISO 8573-1:2010 [7:–:–]					
Note on operating/ pilot medium		Lubricated operation possible (in which case lubricated operation will always be required)					
Ambient temperature	[°C]	−10 … +60					
Temperature of medium	[°C]	−10 … +60					

Materials						
Type	ZK-PK-3	ZK-⅛-B	OS-PK-3	OS-⅛-B	OS-¼-B	OS-½
Housing	Brass, POM	Anodised wrought aluminium alloy	POM	Wrought aluminium alloy		
Seals	NBR					
Note on materials	RoHS-compliant					

AND/OR gates OS/ZK

Technical data

Dimensions Download CAD data ➔ **www.festo.com**

ZK-PK-3
OS-PK-3

ZK-⅛-B
OS-⅛-B

OS-¼-B

OS-½

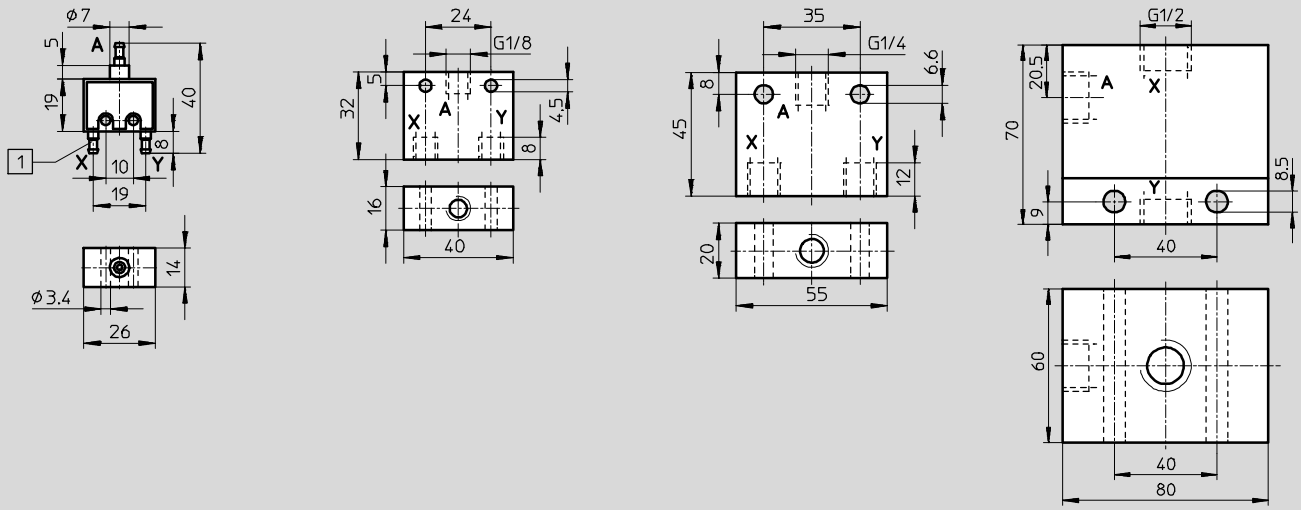

1 Barbed connector PK-3

Note: This product conforms to ISO 1179-1 and to ISO 228-1

Ordering data

Valve function	Pneumatic connection 1, 2, 3	Standard nominal flow rate qnN [l/min]	Weight [g]	Part No.	Type
AND function	PK-3	120	10	**6685**	**ZK-PK-3**
	G⅛	550	45	**6680**	**ZK-⅛-B**
OR function	PK-3	120	9	**6684**	**OS-PK-3**
	G⅛	500	45	**6681**	**OS-⅛-B**
	G¼	1170	110	**6682**	**OS-¼-B**
	G½	5000	814	**3427**	**OS-½**

Counters PZA/PZV

Key features

Adding counter

- Surface mounting
- Panel mounting

Adding counters have 6-digit displays and count upwards, i.e. incoming signals are added. When the counter is reset, 000 000 appears.
A pneumatic signal increments the counter by a half step, and the first half of the digit appears. After completion of the signal, the second half-step increment occurs and the digit becomes fully visible.
The counter can be reset manually by means of a button. It can also be reset by means of a pneumatic signal. A counting signal may not arrive or be present during the resetting procedure.

Predetermining counter

- Subtracting counting mode
- Manual and pneumatic reset
- Protective cover

Predetermining counters count pneumatic signals backwards from a preset number. When zero is reached, the counter generates a pneumatic output signal. This output signal persists until the counter is reset.
The counter is preset by pressing the reset button and simultaneously keying in the preset value. This value is retained when the counter is reset.

Counters PZA/PZV

Technical data

General technical data				
Type		Adding counter		Predetermining counter
		PZA-A-B	PZA-E-C	PZV-E-C
Constructional design		Mechanical counter with pneumatic drive		
Type of mounting		3 through-holes in housing	Panel mounting	
Operating medium		Compressed air in accordance with ISO 8573-1:2010 [7:4:4]		
Note on operating/pilot medium		Operation with lubricated medium not possible		
Pneumatic connection				
Display[1]		6-digit	6-digit	5-digit
Reset		Pushbutton or pneumatic signal		
Response pressure				
Drive	[bar]	0.6 ±0.2	> 0.8	0.6 ±0.2
Reset	[bar]	0.6 ±0.2	2	–
Drop-off pressure				
Drive	[bar]	0.2 ±0.1	< 0.15	0.2 ±0.1
Reset	[bar]	0.15 ±0.1	< 0.15	0.15 ±0.1
Min. pulse length				
Drive	[ms]	10	8	10
Reset	[ms]	180	150	180
Min. pause period				
Drive	[ms]	15	10	15
Reset	[ms]	50	50	50
Materials		Housing: Plastic		
		Seals: Chloroprene		
Weight	[g]	155	70	150

1) Digit size 4.5 mm

Operating and environmental conditions				
Type		Adding counter		Predetermining counter
		PZA-A-B	PZA-E-C	PZV-E-C
Operating pressure	[bar]	2 … 8		
Min. reset pressure	[bar]	2	–	–
Ambient temperature	[°C]	–10 … +60	0 … +60	

Counting rate

Adding counter PZA-E-C

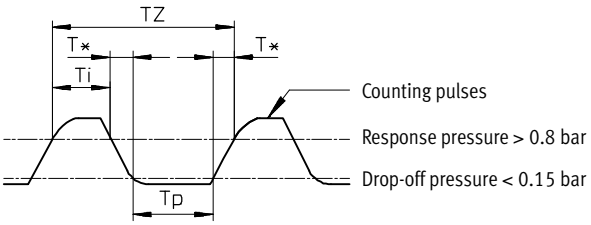

Max. pulse rate = $\frac{1}{TZ}$

$TZ = T_i + T_p + T^*$

$TZ = T_i + T^*$

T_i = Min. pulse length

T_p = Min. pause period

TZ = Time for counting pulse

T* = Depends on pressure and tubing length (values must be determined empirically)

Counting speed v as a function of the operating pressure p

Predetermining counter PZV-E-C

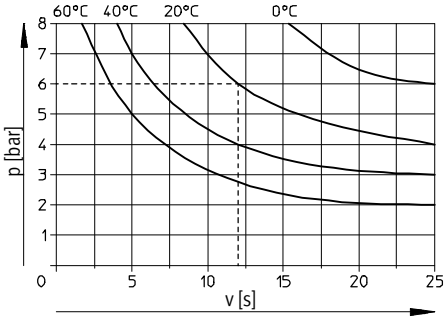

Intermittent operation
The counter operates non-continuously. The counting rate is constant right down to zero contact (high rate possible). A reset then follows.

Continuous operation
The counter operates continuously at a constant rate. The interval between 2 counting signals is longer than the required reset time.

Dimensions Download CAD data ➔ **www.festo.com**

Adding counter
Surface mounting PZA-A-B

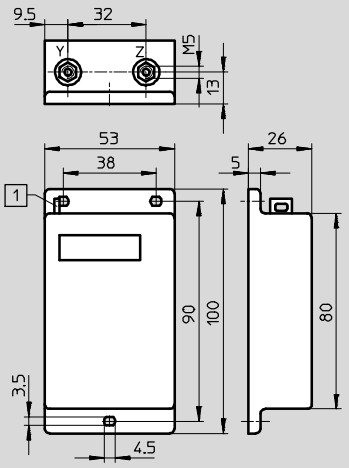

1 Reset button

Z = Counting signal
Y = Reset signal

Panel mounting PZA-E-C

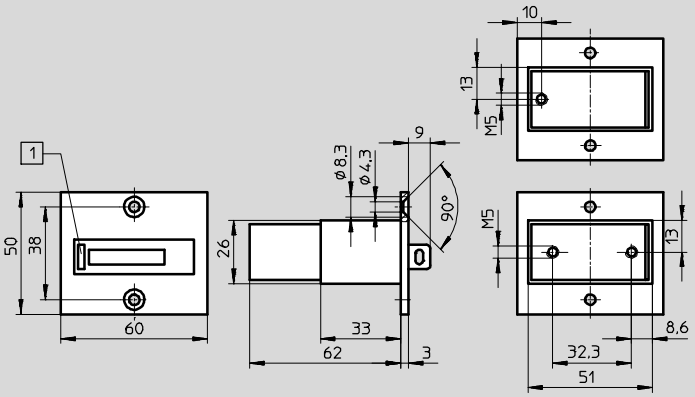

1 Reset button

Predetermining counter
Surface mounting PZV-E-C

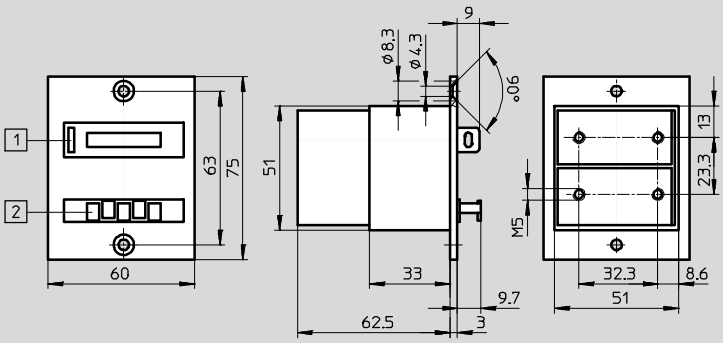

1 Reset button
2 Preselect buttons

The preset number is restored using the reset button or by a pneumatic signal to the reset port.

Note

The output signal must not be used to reset the counter. No counting signal may arrive or be present during the resetting procedure.

Ordering data				
			Part No.	Type
Adding counter	Surface mounting	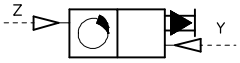	**14992**	**PZA-A-B**
	Panel mounting		**8606**	**PZA-E-C**
Predetermining counter	Surface mounting	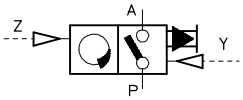	**15608**	**PZV-E-C**

Protective cover
with rotary knob PZ-SK-1
with lock PZ-SS-1
Protective cover for adding counter to protect against entry of dirt and water on the front panel

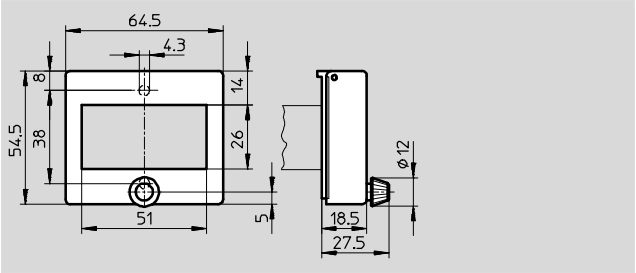

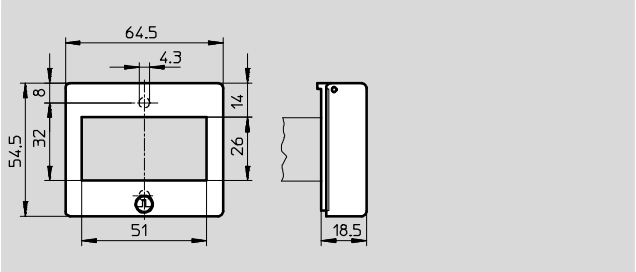

Ordering data		
	Part No.	Type
Protective cover with rotary knob	**14662**	**PZ-SK-1**
Protective cover with lock	**13965**	**PZ-SS-1**

Protective cover
with rotary knob PZ-SK-2
with lock PZ-SS-2
Protective cover for predetermining counter to protect against entry of dirt and water on the front panel

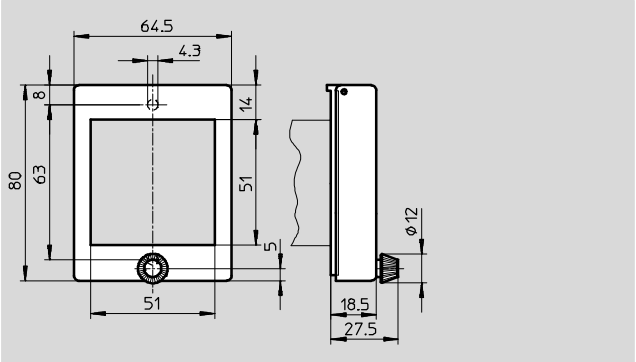

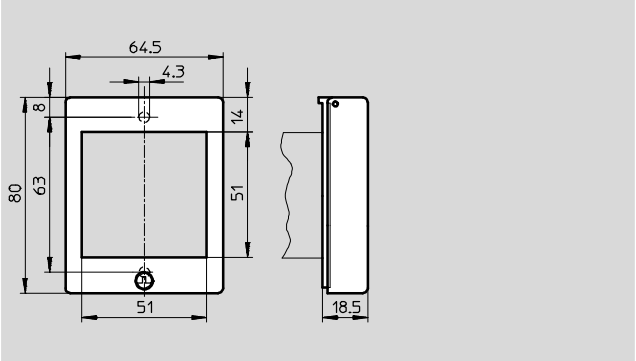

Ordering data		
	Part No.	Type
Protective cover with rotary knob	**14663**	**PZ-SK-2**
Protective cover with lock	**13966**	**PZ-SS-2**

Timers PZVT

Key features

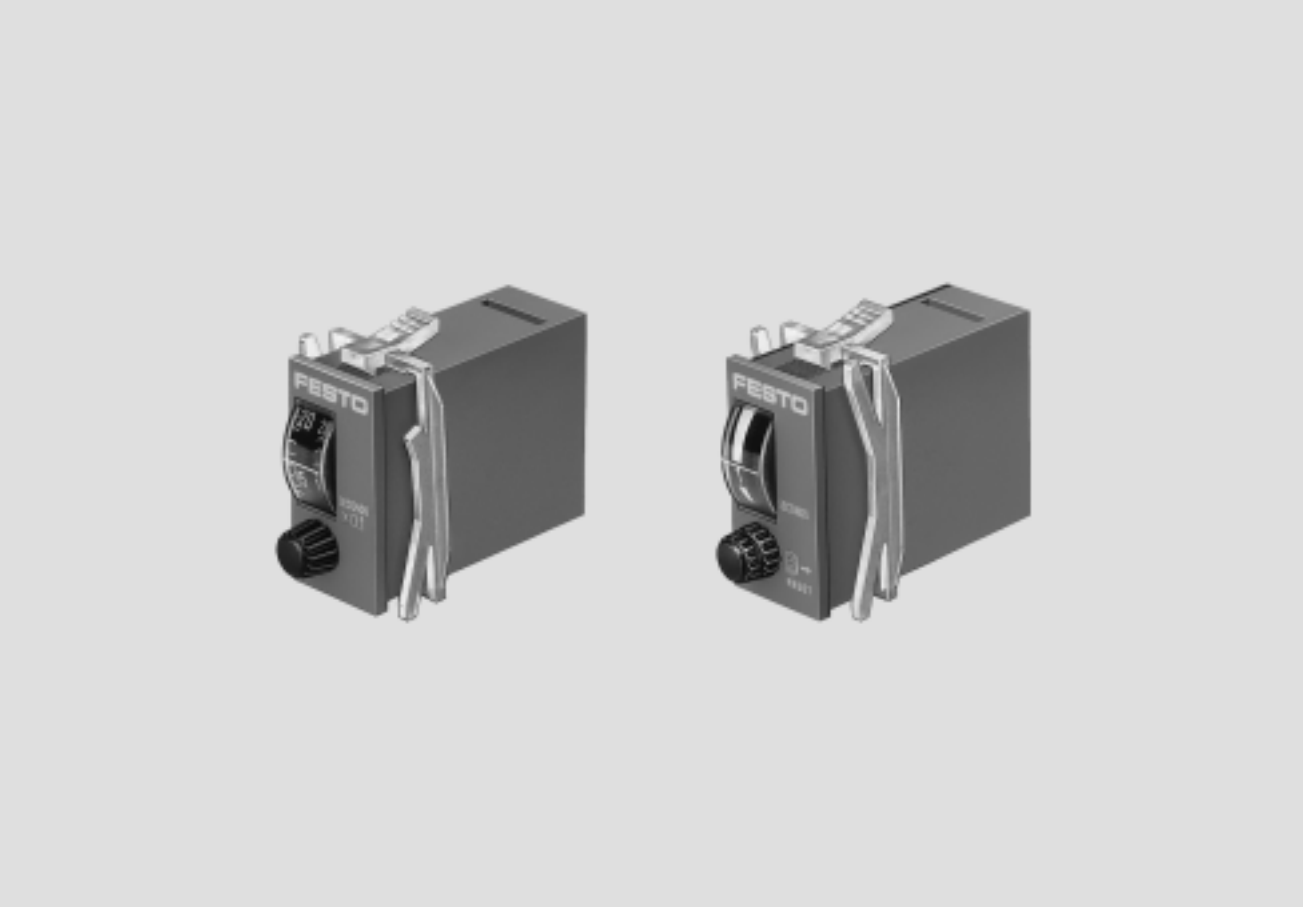

- Adjustable delay times
  - 0.2 ... 3 s
  - 2 ... 30 s
  - 8 ... 120 s
  - 20 ... 300 s
- Panel mounting
- Mounting on H-rail to EN 60715
- Protective cover

Pneumatic timer PZVT

The timer switches input pressure applied to port 1 through to port 2 after the preset delay time has expired.

Automatic reset module PZVT-AUT

The reset module is used to automatically reset timers of type PZVT-...-SEC at the end of a preset time and to generate an output signal of defined duration for control system purposes. The timer can be reset manually by pulling the setting knob on the reset module. This allows the simple creation of pneumatic timer controls with automatically repeating time intervals.

Timers PZVT

Technical data

General technical data						
Type		Timer				Reset module
		PZVT-3-SEC	PZVT-30-SEC	PZVT-120-SEC	PZVT-300-SEC	PZVT-AUT
Constructional design		Mechanical sequence counter with pneumatic drive				
Type of mounting		Panel mounting				
Operating medium		Compressed air in accordance with ISO 8573-1:2010 [7:4:4]				
Note on operating/pilot medium		Operation with lubricated medium not possible				
Pneumatic connection		Female thread M5				
Standard nominal flow rate	[l/min]	50				
Adjustable delay times	[s]	0.2 … 3	2 … 30	8 … 120	20 … 300	0.2 … 2
Repetition accuracy	[s]	±0.1	±0.3	±1.2	±3	±0.3
Setting accuracy	[s]	±0.3	±0.6	±3	±6	–
Pause period for reset	[ms]	≥ 200				
Protection class		IP54 to IEC 60529 with protective cover and panel frame				
Weight	[g]	45				50
Material of housing		ABS				
Note on materials		RoHS-compliant				

Operating and environmental conditions						
Type		PZVT-3-SEC	PZVT-30-SEC	PZVT-120-SEC	PZVT-300-SEC	PZVT-AUT
Operating pressure	[bar]	2 … 6				
Switch-on pressure	[bar]	≥ 1.6				
Switch-off pressure	[bar]	≤0.1				≤0.3
Ambient temperature	[°C]	–10 … +60				–15 … +60

Example of application

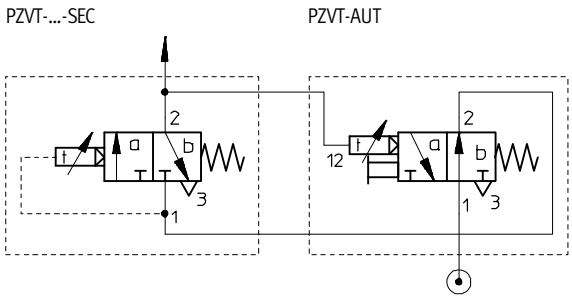

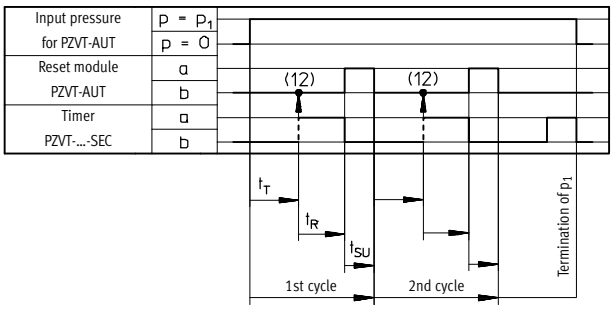

1 = Supply port
2 = Working or outlet line
3 = Exhausts
12 = Pilot line

t_T = Time preset range for timer type PZVT-...-SEC
t_R = Switching delay time for reset module PZVT-AUT (0.2 … 2 s)
t_{SU} = Signal interruption period for reset module PZVT-AUT (≥ 300 ms)

Dimensions

Download CAD data ➔ **www.festo.com**

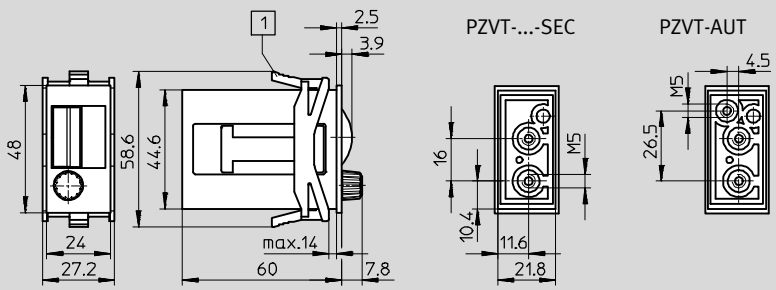

1 Clamping frame included in scope of delivery

Ordering data				
			Part No.	Type
Timer	0.2 … 3 s	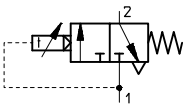	**158495**	**PZVT-3-SEC**
	2 … 30 s		**150238**	**PZVT-30-SEC**
	8 … 120 s		**177616**	**PZVT-120-SEC**
	20 … 300 s		**150239**	**PZVT-300-SEC**
Reset module	0.2 … 2 s	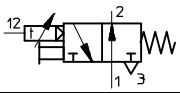	**158496**	**PZVT-AUT**

Protective cover
with rotary knob PZ-SK-2
with lock PZ-SS-2
Protective cover for timers to protect against entry of dirt and water on the front panel

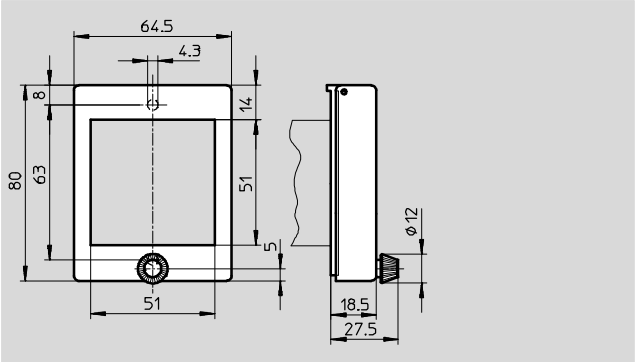

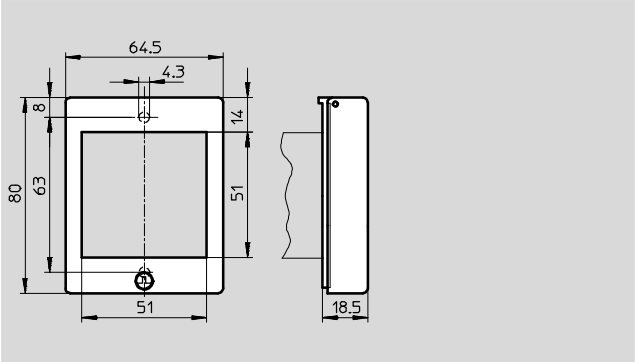

Ordering data		
	Part No.	Type
Protective cover with rotary knob	**14663**	**PZ-SK-2**
Protective cover with lock	**13966**	**PZ-SS-2**

Panel frame PZVT-FR
for panel mounting

Note on materials: RoHS-compliant

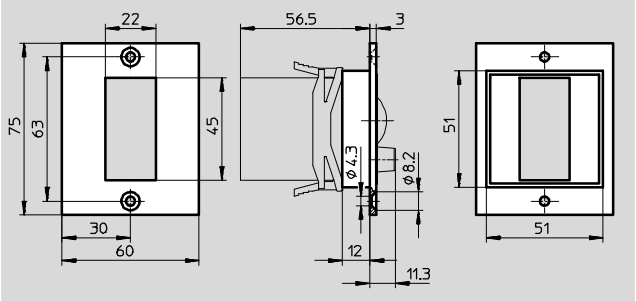

Ordering data		
	Part No.	Type
Panel frame	**150241**	**PZVT-FR**

Base PZVT-S-DIN
for mounting on H-rail to EN 60715

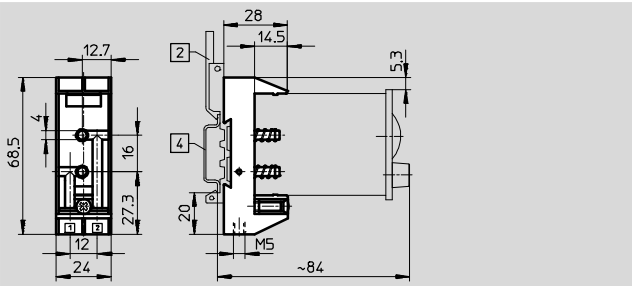

2 Mounting plate MPL-MUS/PZ-H

4 H-rail to EN 60715

- Note

The base PZVT-S-DIN cannot be used for the reset module PZVT-AUT.

Ordering data		
	Part No.	Type
Base	**150240**	**PZVT-S-DIN**

Mounting plate MPL-MUS/PZ-H
for H-rail to EN 60715

Ordering data		
	Part No.	Type
Mounting plate for H-rail	**19135**	**MPL-MUS/PZ-H**