Valve series VOFC

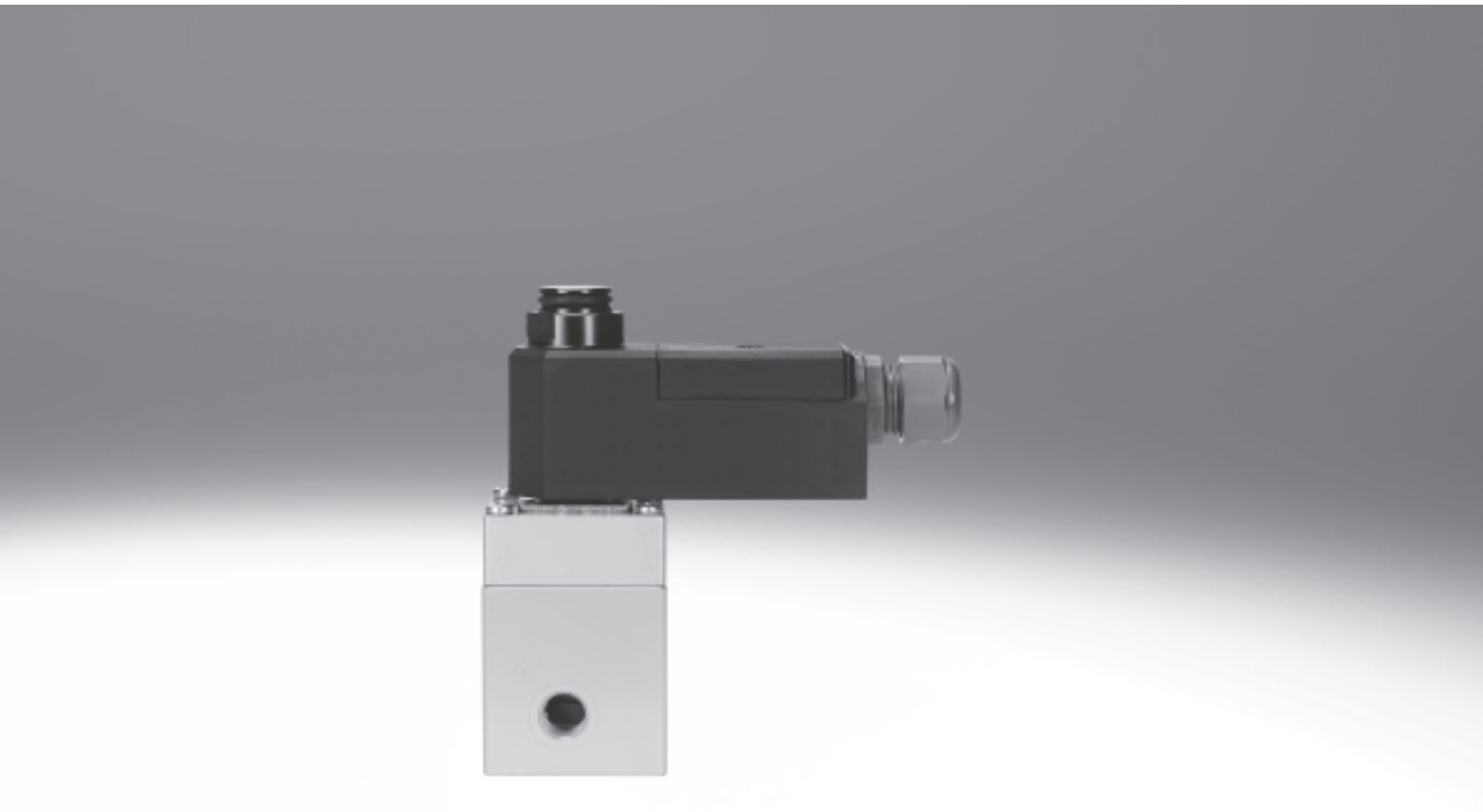

Solenoid valves VOFC

Key features

General information

- The valves in the VOFC series are special 3/2-way and 5/2-way valves for process automation, for use within chemical and petrochemical systems, where they are frequently used as pilot valves for flaps and drives. Their sturdy design and high resistance to corrosion make these valves suitable for outdoor use under harsh ambient conditions.
- The Namur flange pattern makes the solenoid valves especially suitable for quarter-turn actuators. The integrated spring chamber ventilation protects quarter-turn actuators with spring return (single-acting cylinders and drives) against contaminated ambient air and weather influences such as rain.
- With German Technical Control Board (TÜV) report up to AK7/SIL-4.

Function, design

- 3/2-way or 5/2-way, single solenoid or double solenoid, depending on type.
- Piloted piston spool and piston poppet valves.

Sturdy

- The surface of the valve housing is treated with hard Ematal. This treatment involves converting the aluminium surface into a very hard aluminium oxide layer with titanium oxide intercalations and gives the valves very high resistance to wear and abrasion as well as first-class sliding qualities. This provides optimum protection against atmospheric and chemical influences.
- You can find information on the media resistance of the product at ➔ www.festo.com.

Flexible in function

- The valve is easily modified for internal or external pilot air using a screw.
- Depending on the required function, the pressure connection is established independently of the working pressure as a pressure or vacuum connection.

Economical

- One type, one part number for two functions.
- Internal and external pilot air function integrated in one valve.
- One valve, two connection options.
- Port pattern to Namur for direct mounting of a drive as well as G and NPT threaded connections.

VOFC – Basic valves

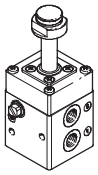

- 3/2-way, 5/2-way valves
- Connections G¼, NPT¼, G½
- Namur port pattern, optional with P channel

➔ 6

VACC-S13 – Solenoid coils

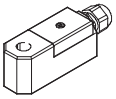

- AC and DC voltage 24V, 110V, 230V
- Type of explosion protection Ex emb II, Ex ia IIC

➔ 32

VOFC – Solenoid valves

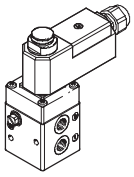

- Combination of basic valve VOFD and S13 coil VACC
- 3/2-way, 5/2-way valves
- Type of explosion protection Ex emb II

➔ 24

VOFC – Accessories

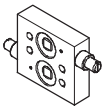

- Throttle plate
- Mounting plate
- Adapter with filter
- Hand lever

➔ 37

Solenoid valves VOFC

Peripherals overview

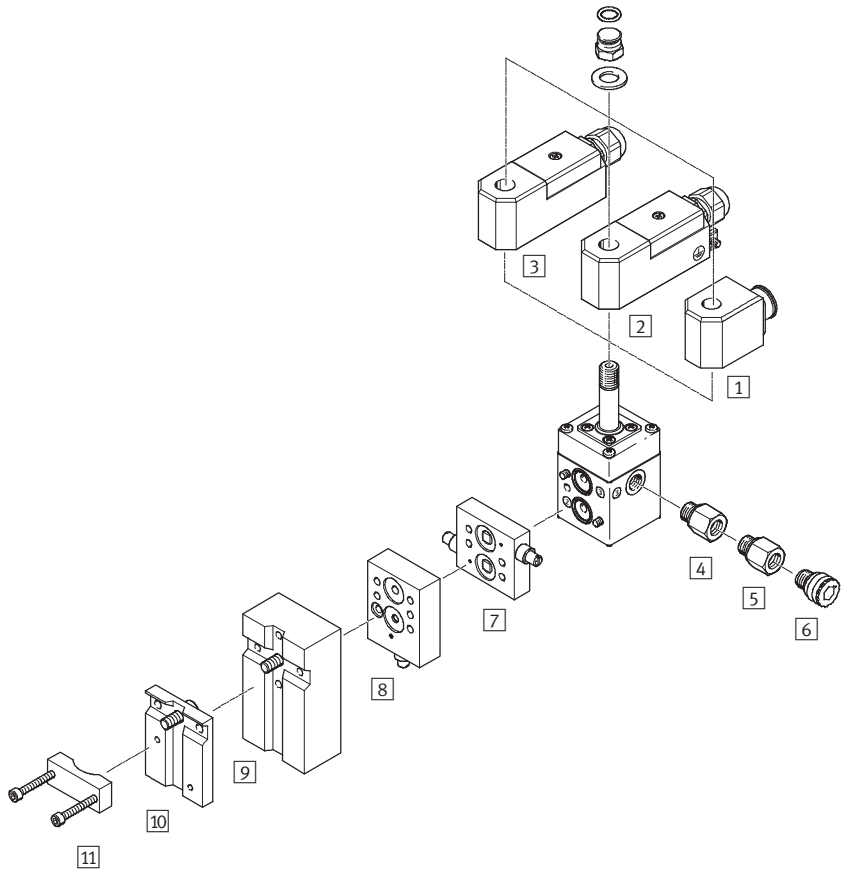

Mounting attachments and accessories		
	Brief description	**➔ Page/Internet**
1 Solenoid coil VACC-S13	Standard magnet	32
2 Solenoid coil VACC-S13-me	Ex-me magnet	33
3 Solenoid coil VACC-S13-A	Ex-ia magnet	35
4 Adapter NPFV-AF-G14-N14-MF	Adapter from G¼ to NPT ¼, with filter	39
5 Adapter NPFV-AF-G14-G14-MF	Adapter from G¼ to G¼, with filter	39
6 Exhaust protection VABD-D3-SN-G14	Exhaust protection to IP65. The spring chamber of drive 8 solenoid valve is protected against the ingress of aggressive ambient air and water by the one-way flow control system	40
7 Flow control plate VABF-S7-F1B1P2-F	Exhaust air flow control plate for Namur interface for installation between the solenoid valve and double-acting drives	37
8 Flow control plate VABF-S7-F1B5P1-F	Exhaust air flow control plate for Namur interface for installation between the solenoid valve and single-acting drives	37
9 Connection plate kit VABF-S7-S-G14	Mounting plate for attaching the valve to a Namur rib	38
10 Mounting plate VAME-S7-P	Mounting plate for attaching the valve to a Namur rib	38
11 Mounting bracket VAME-S7-Y	Alternative option (instead of screw) of attaching the valve to a Namur rib with the help of a mounting bracket	39

Solenoid valves VOFC

Type codes

VOFC	–	L	–	B52	–	M	–	Z	–	G12	–	1	–	A1

Type	
VOFC	Solenoid valve

Type of directional control valve	
L	In-line valve

Valve function	
B52	5/2-way valve, double solenoid
M32C	3/2-way valve, normally closed
M52	5/2-way valve, single solenoid

Reset method for single solenoid valves	
M	Mechanical spring

Pilot supply air	
	Internal
Z	External
C	Internal/external pilot air

Pneumatic connection	
G12	G½
G14	G¼
N12	½ NPT
N14	¼ NPT
FG12	Namur G½
FG14	Namur G¼

Nominal operating voltage	
	Without solenoid coil, not relevant
1	24 V DC
1U	24 V DC and AC
2A	110 V AC/50-60 Hz
2U	110 V DC and AC
3A	230 V AC/50-60 Hz
3U	230 V DC and AC

Electrical connection	
A1	Port pattern type A, to EN 175 301
K4	Cable connector M20
F9	Armature tube for solenoid coil 13
F10	Armature tube for solenoid coil 18
K1	Cable

Solenoid valves VOFC

Type codes

F	–	EX3	–	D

Protective circuit	
	None/standard
F	Fuse
FX	Fuse and freewheeling diode
X	Freewheeling diode

Approval EU, US	
	Approval defined upon introduction (standard)
Ex3	II 2G
Ex4	II 2GD

Type of explosion protection	
	None
D	Pressure-resistant casing
E	Enhanced safety
M	Moulded encapsulation
ME	Moulded encapsulation, enhanced safety
N	Non-sparking
Q	Sand casing
A	Intrinsically safe

Basic valves VOFC

Technical data – 3/2-way valves, G¼ and Namur

Function
3/2-way valve

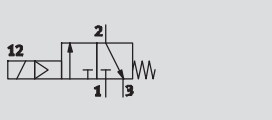

Temperature range
–25 ... +60 °C

Flow rate
600 l/min

General technical data					
		G¼ basic valve, Namur	G¼ Exi variant, for low ratings	G¼ basic valve, Namur, P connection	G¼ basic valve, for low ratings
Valve function		3/2-way closed, single solenoid			
Pneumatic connection	1	G¼		Namur port pattern	
	2	G¼ and Namur port pattern			
	3	G¼			
	4	G¼ and Namur port pattern			
Design		Piloted piston poppet valve			
Width	[mm]	51			
Mounting position		Any			
Duty cycle		100%			
Sealing principle		Soft			
Manual override		None			
Reset method		Mechanical spring			
Actuation type		Electrical			
Type of control		Piloted			
Pilot air supply		Internal			
Flow rate Kv pressurisation	[m^3/h]	0.5			
Flow rate Kv exhausting	[m^3/h]	0.65			
Direction of flow		Non-reversible			
Product weight	[g]	600		550	
Response time off	[ms]	12			
Response time on	[ms]	20			
Nominal size	[mm]	6			
Standard nominal flow rate	[l/min]	600			

Operating and environmental conditions					
		G¼ basic valve	G¼ Exi variant, for low ratings	G¼ basic valve, Namur, P connection	G¼ basic valve, for low ratings
Operating medium		Compressed air in accordance with ISO 8573-1:2010 [–:–:–]			
Protection class		IP65			
Operating pressure range	[bar]	2 ... 8			
Temperature of medium	[°C]	–25 ... +60			
Ambient temperature	[°C]	–25 ... +60			
Safety integrity level	[SIL]	Up to SIL 4 Low Demand mode			
		Up to SIL 4 High Demand mode			
Corrosion resistance class CRC[1)]		4			

1) Corrosion resistance class 4 according to Festo standard 940 070
Components with very heavy corrosion exposure. Components in contact with aggressive media, e.g. in food or chemical industries. These applications must, if necessary, be verified by special tests with the media concerned.

Materials

Sectional view

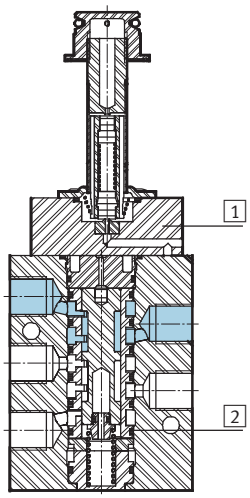

Solenoid valves	G¼ basic valve	G¼ Exi variant, for low ratings	G¼ basic valve, Namur, P connection	G¼ basic valve, for low ratings
1 Housing	Hard Ematal-anodised aluminium			
2 Seals	Nitrile rubber			
– Note on materials	Contains PWIS (paint-wetting impairment substances), RoHS-compliant			

Dimensions

Download CAD Data ➔ **www.festo.com/us/cad**

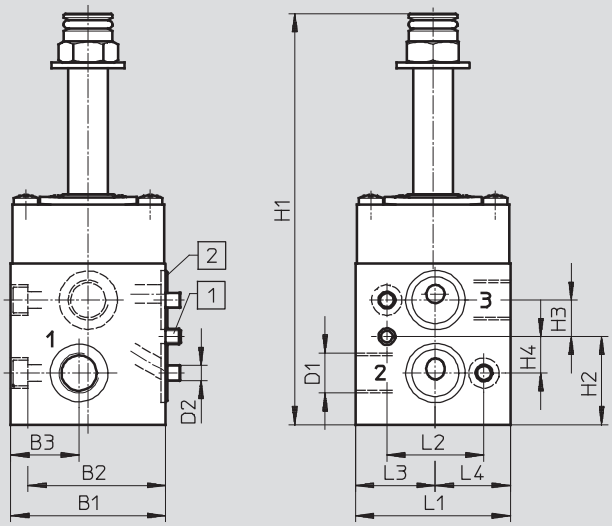

1 Coding pin M5x10
2 O-ring 16x2

Type	B1	B2	B3	D1	D2	H1	H2	H3	H4	L1	L2	L3	L4
VOFC-L-M32C-M-FG14-F9 VOFC-L-M32C-M-FG14-F9-A	51	45.3	22.5	G¼	M5	135.3	29	12	12	51	32	26.3	24.7

Dimensions Download CAD Data ➔ **www.festo.com/us/cad**

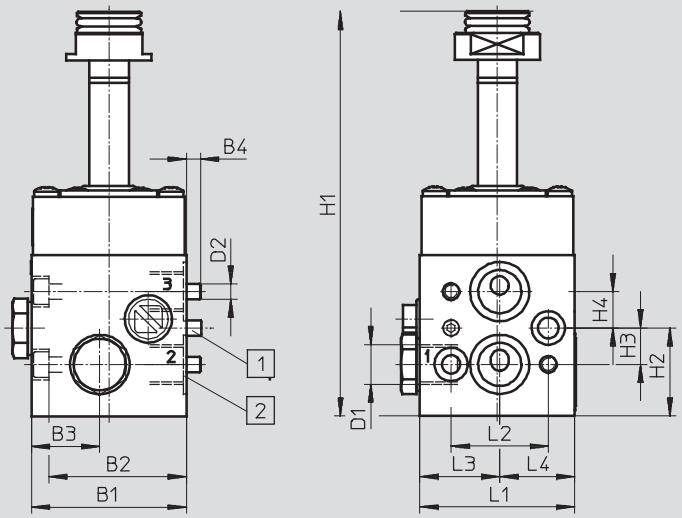

1 Coding pin M5x10

2 O-ring 16x2

Type	B1	B2	B3	B4	D1	D2	H1	H2	H3	H4	L1	L2	L3	L4
VOFC-L-M32C-M-FGP14-F9 VOFC-L-M32C-M-FGP14-F9-A	51	45.3	22.5	4.7	Namur G¼	M5	133.4	29	12	12	51	32	26.3	24.7

Basic valves VOFC

Technical data – 3/2-way valves, G¼

Function
3/2-way valve

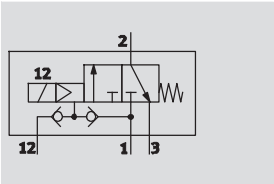

Temperature range
–25 ... +60 °C

Flow rate
600 l/min

General technical data					
Type		G¼ basic valve	G¼ Exi variant	NPT basic valve	NPT Exi variant
Valve function		3/2-way closed, single solenoid			
Pneumatic connection	1	G¼	G¼	NPT¼-18	NPT¼-18
	2	G¼	G¼	–	–
	2	–	–	NPT¼-18	NPT¼-18
	3	G¼	G¼	NPT¼-18	NPT¼-18
	4	G¼	G¼	–	–
	4	–	–	NPT¼-18	NPT¼-18
Design		Piloted piston poppet valve			
Width	[mm]	51			
Mounting position		Any			
Duty cycle		100%			
Sealing principle		Soft			
Manual override		None			
Reset method		Mechanical spring			
Actuation type		Electrical			
Type of control		Piloted			
Pilot air supply		Internal, external			
Flow rate for piston valve pressurisation	[m^3/h]	0.72			
		1.38			
Direction of flow		Non-reversible			
Product weight	[g]	550			
Response time off	[ms]	12			
Response time on	[ms]	20			
Nominal size	[mm]	6			
Standard nominal flow rate	[l/min]	900			

Operating and environmental conditions					
Type		G¼ basic valve	G¼ Exi variant	NPT basic valve	NPT Exi variant
Operating medium		Compressed air in accordance with ISO 8573-1:2010 [–:–:–]			
Protection class		IP65			
Operating pressure range	[bar]	2 ... 8			
External operating pressure range	[bar]	0 ... 8			
Temperature of medium	[°C]	–25 ... +60			
Ambient temperature	[°C]	–25 ... +60			
Safety integrity level	[SIL]	Up to SIL 4 Low Demand mode			
		Up to SIL 4 High Demand mode			
Corrosion resistance class CRC[1)]		4			

1) Corrosion resistance class 4 according to Festo standard 940 070
Components with very heavy corrosion exposure. Components in contact with aggressive media, e.g. in food or chemical industries. These applications must, if necessary, be verified by special tests with the media concerned.

Materials

Sectional view

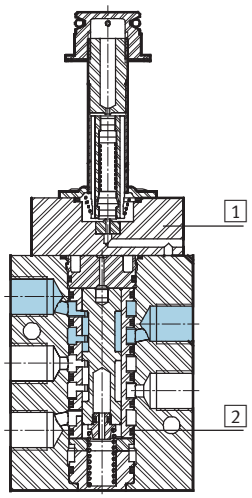

Solenoid valves	G¼ basic valve	G¼ Exi variant	NPT basic valve	NPT Exi variant
1 Housing	Hard Ematal-anodised aluminium			
2 Seals	Nitrile rubber			
– Note on materials	Contains PWIS (paint-wetting impairment substances), RoHS-compliant			

Dimensions

Download CAD Data ➔ **www.festo.com/us/cad**

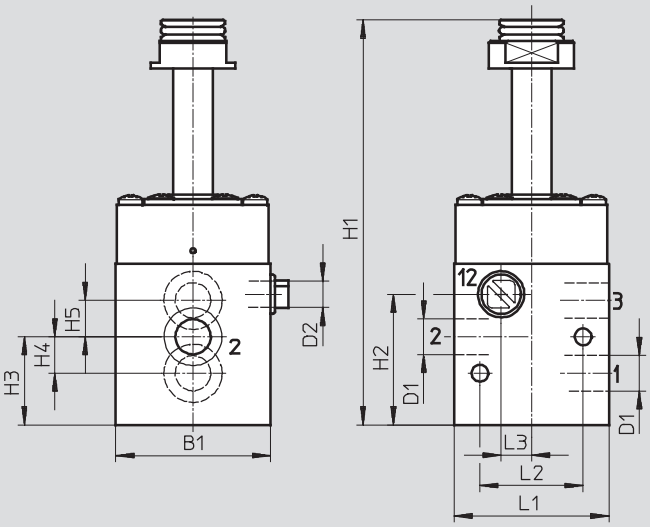

Type	B1	D1	D2	H1	H2	H3	H4	H5	L1	L2	L3
VOFC-L-M32C-MC-G14-F9 VOFC-L-M32C-MC-G14-F9-A VOFC-L-M32C-MC-N14-F9 VOFC-L-M32C-MC-N14-F9-A	51	G¼	G⅛	133	43	29	12	12	51	34	10

Basic valves VOFC

Technical data – 3/2-way valves, G½ and Namur

Function
3/2-way valve

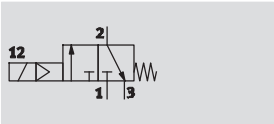

Temperature range
–25 ... +60 °C

Flow rate
3,000 l/min

General technical data				
			G½ basic valve	G½ Exi variant
Valve function			3/2-way closed, single solenoid	
Pneumatic connection	1		G½	
	2		G½ and Namur port pattern	
	3		G½	
	4		G½ and Namur port pattern	
Design			Piloted piston poppet valve	
Width		[mm]	51	
Mounting position			Any	
Duty cycle			100%	
Sealing principle			Soft	
Manual override			None	
Reset method			Mechanical spring	
Actuation type			Electrical	
Type of control			Piloted	
Pilot air supply			Internal	
Flow rate for piston valve pressurisation		[m^3/h]	3.8	
Direction of flow			Non-reversible	
Product weight		[g]	880	
Response time off		[ms]	14	
Response time on		[ms]	25	
Nominal size		[mm]	12	
Standard nominal flow rate		[l/min]	3,000	

Operating and environmental conditions			
		G½ basic valve	G½ Exi variant
Operating medium		Compressed air in accordance with ISO 8573-1:2010 [–:–:–]	
Protection class		IP65	
Operating pressure range	[bar]	2 ... 8	
Temperature of medium	[°C]	–25 ... +60	
Ambient temperature	[°C]	–25 ... +60	
Corrosion resistance class CRC[1)]		4	

1) Corrosion resistance class 4 according to Festo standard 940 070
Components with very heavy corrosion exposure. Components in contact with aggressive media, e.g. in food or chemical industries. These applications must, if necessary, be verified by special tests with the media concerned.

Materials

Sectional view

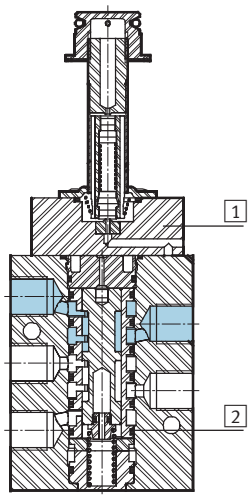

Solenoid valves	G½ basic valve	G½ Exi variant
1 Housing	Hard Ematal-anodised aluminium	
2 Seals	Nitrile rubber	
– Note on materials	Contains PWIS (paint-wetting impairment substances), RoHS-compliant	

Dimensions

Download CAD Data ➔ **www.festo.com/us/cad**

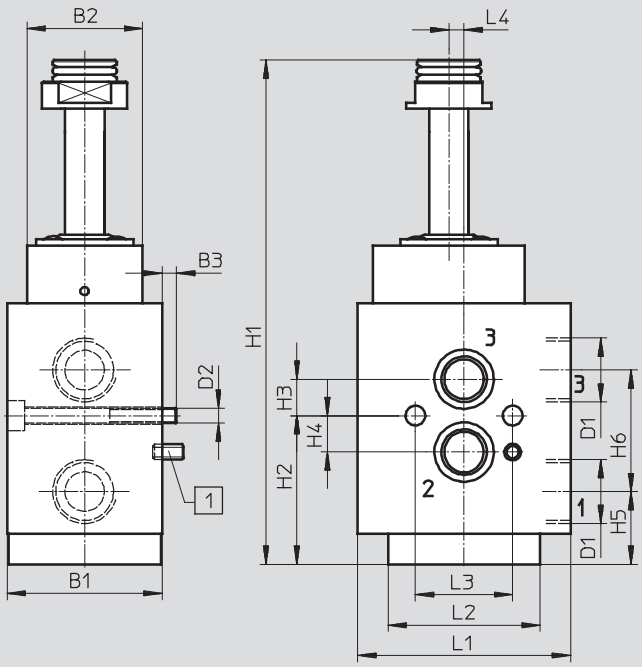

1 Coding pin M5x10

Type	B1	B2	B3	D1	D2	H1	H2	H3	H4	H5	H6	L1	L2	L3	L4
VOFC-L-M32C-M-FG12-F9 VOFC-L-M32C-M-FG12-F9-A	51	38	4.7	G½	M5	166	49	12	12	24	40	70	50	32	5

Basic valves VOFC

Technical data – 3/2-way valves, G½

Function
3/2-way valve

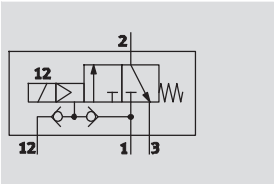

Temperature range
–25 ... +60 °C

Flow rate
3,000 l/min

General technical data				
			G½ basic valve	G½ Exi variant
Valve function			3/2-way closed, single solenoid	
Pneumatic connection	1		G½	
	2		G½	
	3		G½	
	4		G½	
Design			Piloted piston poppet valve	
Width		[mm]	51	
Mounting position			Any	
Duty cycle			100%	
Sealing principle			Soft	
Manual override			None	
Reset method			Mechanical spring	
Actuation type			Electrical	
Type of control			Piloted	
Pilot air supply			Internal, external	
Flow rate for piston valve pressurisation		[m^3/h]	3.8	
Direction of flow			Non-reversible	
Product weight		[g]	880	
Response time off		[ms]	14	
Response time on		[ms]	25	
Nominal size		[mm]	12	
Standard nominal flow rate		[l/min]	3,000	

Operating and environmental conditions			
		Basic valve	Exi variant
Operating medium		Compressed air in accordance with ISO 8573-1:2010 [–:–:–]	
Protection class		IP65	
Operating pressure range	[bar]	2 ... 8	
External operating pressure range	[bar]	0 ... 8	
Temperature of medium	[°C]	–25 ... +60	
Ambient temperature	[°C]	–25 ... +60	
Corrosion resistance class CRC[1)]		4	

1) Corrosion resistance class 4 according to Festo standard 940 070
Components with very heavy corrosion exposure. Components in contact with aggressive media, e.g. in food or chemical industries. These applications must, if necessary, be verified by special tests with the media concerned.

Materials

Sectional view

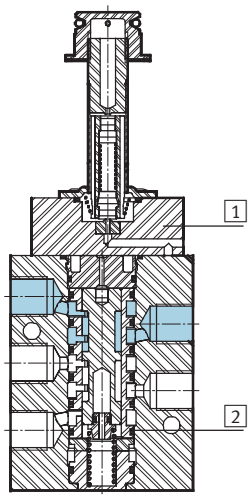

Solenoid valves	G½ basic valve	G½ Exi variant
1 Housing	Hard Ematal-anodised aluminium	
2 Seals	Nitrile rubber	
– Note on materials	Contains PWIS (paint-wetting impairment substances), RoHS-compliant	

Dimensions

Download CAD Data ➔ **www.festo.com/us/cad**

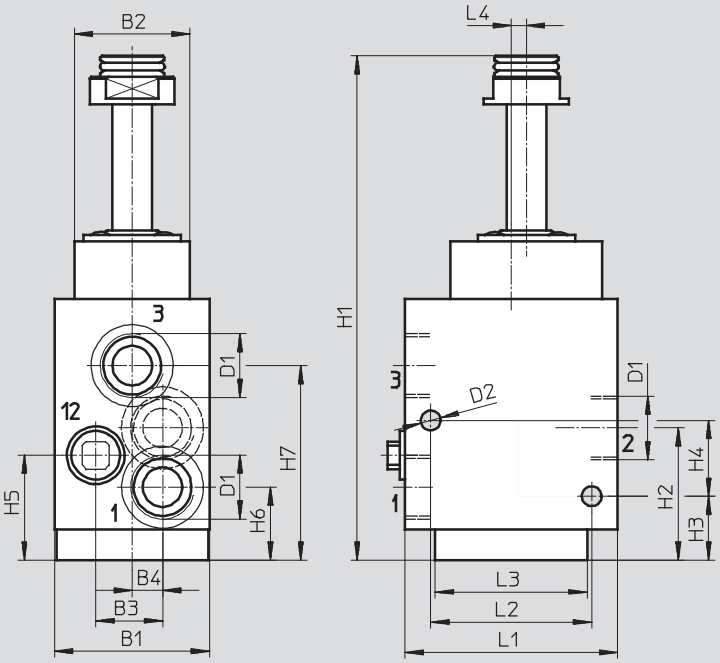

Type	B1	B2	B3	B4	D1	D2	H1	H2	H3	H4	H5	L1	L2	L3	L4
VOFC-L-M32C-MC-G12-F9 VOFC-L-M32C-MC-G12-F9-A	51	37	22	10	G½	6.5	166	43.5	21	25	34.5	70	53	50	5

Basic valves VOFC

Technical data – 5/2-way valves, G¼ and Namur

Function
5/2-way valve

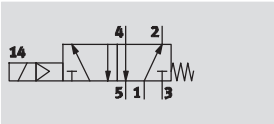

Temperature range
–25 ... +60 °C

Flow rate
750 l/min

General technical data				
			G¼ basic valve	G¼ Exi variant
Valve function			5/2-way, single solenoid	
Pneumatic connection	1		G¼	
	2		G¼ and Namur port pattern	
	3		G¼	
	4		G¼ and Namur port pattern	
Design			Hard piston spool valve	
Mounting position			Any	
Width		[mm]	40	
Duty cycle			100%	
Sealing principle			Hard	
Manual override			None	
Reset method			Mechanical spring	
Actuation type			Electrical	
Type of control			Piloted	
Pilot air supply			Internal	
Flow rate for piston valve pressurisation		[m^3/h]	0.65	
Direction of flow			Non-reversible	
Product weight		[g]	620	
Response time off		[ms]	40	
Response time on		[ms]	24	
Nominal size		[mm]	6	
Standard nominal flow rate		[l/min]	750	

Operating and environmental conditions			
		G¼ basic valve	G¼ Exi variant
Operating medium		Compressed air in accordance with ISO 8573-1:2010 [–:–:–]	
Protection class		IP65	
Operating pressure range	[bar]	2 ... 8	
Temperature of medium	[°C]	–25 ... +60	
Ambient temperature	[°C]	–25 ... +60	
Corrosion resistance class CRC[1)]		4	

1) Corrosion resistance class 4 according to Festo standard 940 070
Components with very heavy corrosion exposure. Components in contact with aggressive media, e.g. in food or chemical industries. These applications must, if necessary, be verified by special tests with the media concerned.

Materials

Sectional view

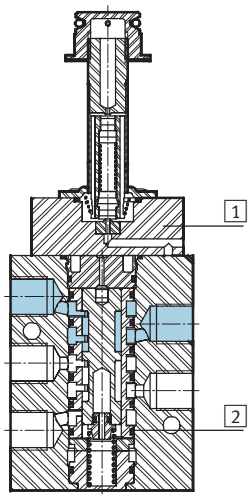

Solenoid valves	G¼ basic valve	G¼ Exi variant
1 Housing	Hard Ematal-anodised aluminium	
2 Seals	Nitrile rubber	
– Note on materials	Contains PWIS (paint-wetting impairment substances), RoHS-compliant	

Dimensions

Download CAD Data ➔ **www.festo.com/us/cad**

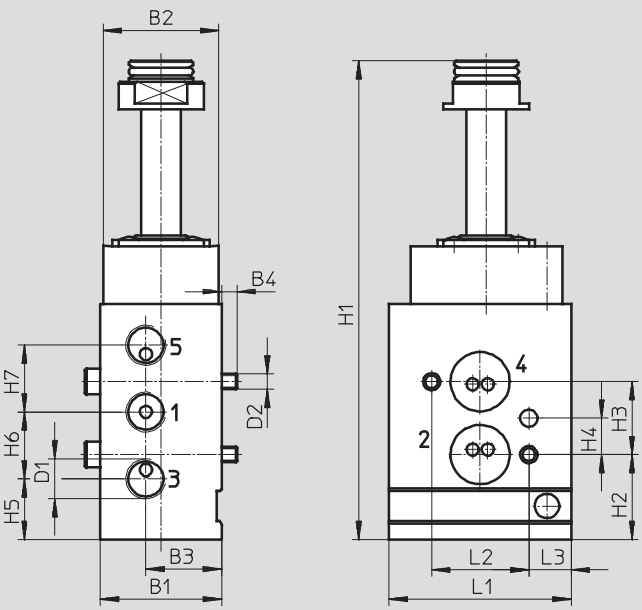

Type	B1	B2	B3	B4	D1	D2	H1	H2	H3	H4	H5	H6	H7	L1	L2	L3
VOFC-L-M52-M-FG14-F9 VOFC-L-M52-M-FG14-F9-A	40	38	25	5	G¼	M5	158	28	24	12	20	22	22	60	32	14

Basic valves VOFC

Technical data – 5/2-way valves, G¼

Function
5/2-way valve

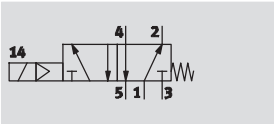

Temperature range
–25 ... +60 °C

Flow rate
850 l/min

General technical data				
			G¼ basic valve	G¼ Exi variant
Valve function			5/2-way single solenoid	
Pneumatic connection	1		G¼	
	2		G¼	
	3		G¼	
	4		G¼	
Design			Hard piston spool valve	
Mounting position			Any	
Width		[mm]	40	
Duty cycle			100%	
Sealing principle			Hard	
Manual override			None	
Reset method			Mechanical spring	
Actuation type			Electrical	
Type of control			Piloted	
Pilot air supply			Internal	
Flow rate for piston valve pressurisation		[m^3/h]	0.65	
Direction of flow			Non-reversible	
Product weight		[g]	620	
Response time off		[ms]	40	
Response time on		[ms]	24	
Nominal size		[mm]	6	
Standard nominal flow rate		[l/min]	850	

Operating and environmental conditions				
			G¼ basic valve	G¼ Exi variant
Operating medium			Compressed air in accordance with ISO 8573-1:2010 [–:–:–]	
Protection class			IP65	
Operating pressure range		[bar]	2 ... 8	
Temperature of medium		[°C]	–25 ... +60	
Ambient temperature		[°C]	–25 ... +60	
Corrosion resistance class CRC[1)]			4	

1) Corrosion resistance class 4 according to Festo standard 940 070
Components with very heavy corrosion exposure. Components in contact with aggressive media, e.g. in food or chemical industries. These applications must, if necessary, be verified by special tests with the media concerned.

Materials

Sectional view

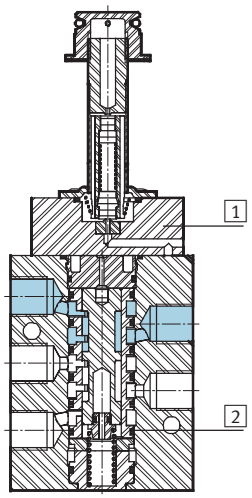

Solenoid valves	G¼ basic valve	G¼ Exi variant
1 Housing	Hard Ematal-anodised aluminium	
2 Seals	Nitrile rubber	
– Note on materials	Contains PWIS (paint-wetting impairment substances), RoHS-compliant	

Dimensions

Download CAD Data ➔ **www.festo.com/us/cad**

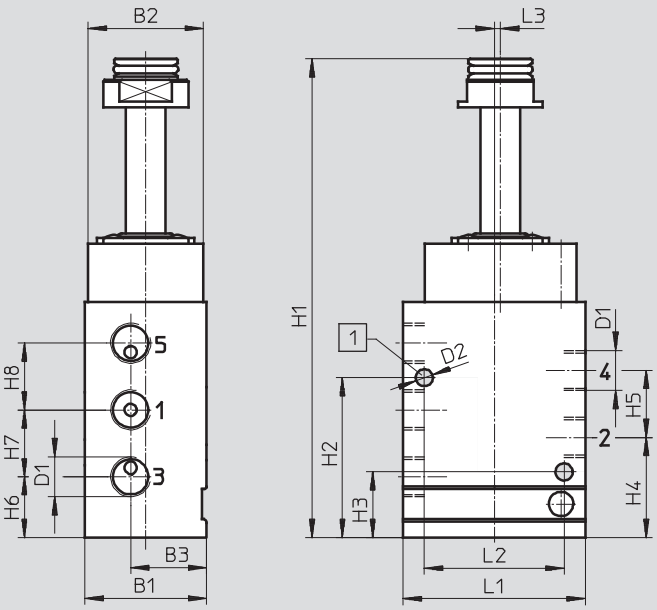

1 Coding pin M5x10

Type	B1	B2	B3	D1	D2	H1	H2	H3	H4	H5	H6	H7	H8	L1	L2
VOFC-L-M52M-G14-F9 VOFC-L-M52M-G14-F9-A	40	38	25	G¼	M5	158	52.6	21.6	33	22	20	22	22	60	46

Basic valves VOFC

Technical data – 5/2-way valves, G¼, NAMUR

Function
5/2-way valve

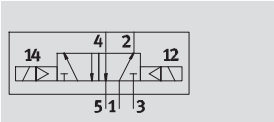

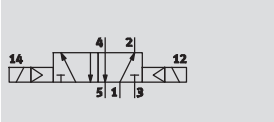

Temperature range
–25 … +60 °C

Flow rate
750, 850 l/min

General technical data					
		G¼, NAMUR	G¼, NAMUR	G¼	G¼
Valve function		5/2-way, double solenoid			
Pneumatic connection	1	G¼			
	2	NAMUR port pattern		G¼	
	3	G¼			
	4	NAMUR port pattern		G¼	
Design		Hard piston spool valve			
Mounting position		Any			
Width	[mm]	40			
Duty cycle	[%]	100			
Sealing principle		Hard			
Manual override		None			
Actuation type		Electric			
Type of control		Piloted			
Pilot air supply		Internal			
Flow rate for piston valve pressurisation	[m^3/h]	0.65			
Flow rate for piston valve exhausting	[m^3/h]	0.65			
Direction of flow		Non-reversible			
Product weight	[g]	790			
Switching time off	[ms]	40		20	
Switching time on	[ms]	24		20	
Max. switching frequency	[Hz]	1			
Nominal size	[mm]	6			
Standard nominal flow rate	[l/min]	750		850	

Operating and environmental conditions					
		G¼, NAMUR	G¼, NAMUR	G¼	G¼
Operating medium		Compressed air in accordance with ISO 8573-1:2010 [–:–:–]			
Protection class		IP65			
Operating pressure range	[bar]	2 … 8			
Temperature of medium	[°C]	–25 … +60			
Ambient temperature	[°C]	–25 … +60			
Corrosion resistance class CRC[1)]		4			

1) Corrosion resistance class 4 according to Festo standard 940 070
Components subject to particularly high corrosion stress. Parts used with aggressive media, e.g. in the food or chemical industry. These applications should be supported with special tests with the media if required.

Materials

Sectional view

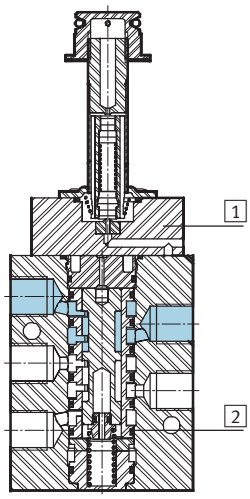

Solenoid valves	G¼, NAMUR	G¼, NAMUR	G¼	G¼
1 Housing	Hard Ematal-anodised aluminium			
2 Seals	NBR			
– Note on materials	Contains PWIS (paint-wetting impairment substances), RoHS-compliant			

Basic valves VOFC

Technical data – 5/2-way valves, G¼, NAMUR

Dimensions Download CAD Data ➔ **www.festo.com/us/cad**

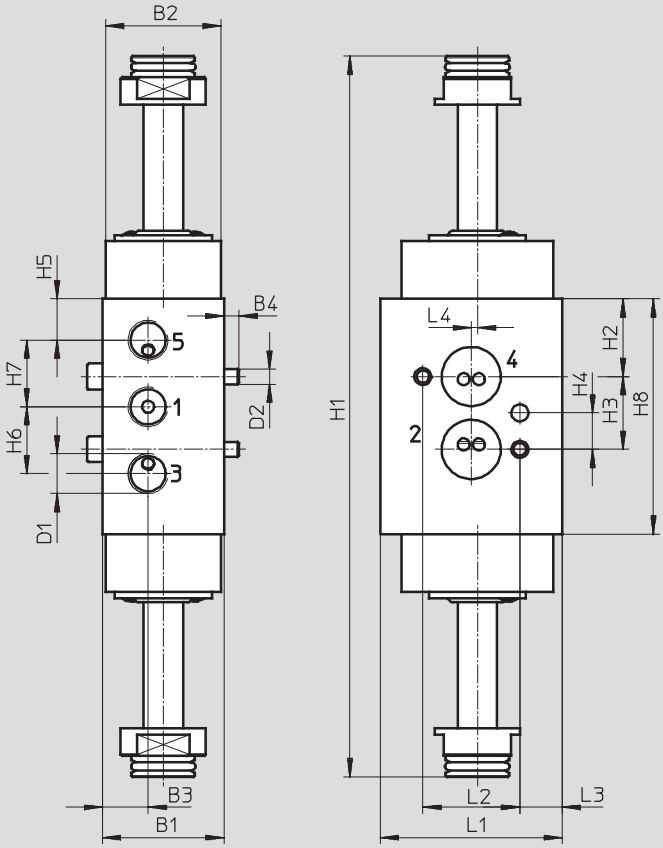

Type	B1	B2	B3	B4	D1	D2	H1	H2	H3	H4	H5	H6	H7	H8	L1	L2	L3	L4
VOFC-L-B52-FG14-F9 VOFC-L-B52-FG14-F9-A	40	38	15	5	G¼	M5	237.6	25.6	24	12	13.6	22	22	77.6	60	32	14	2

Dimensions Download CAD Data ➔ **www.festo.com/us/cad**

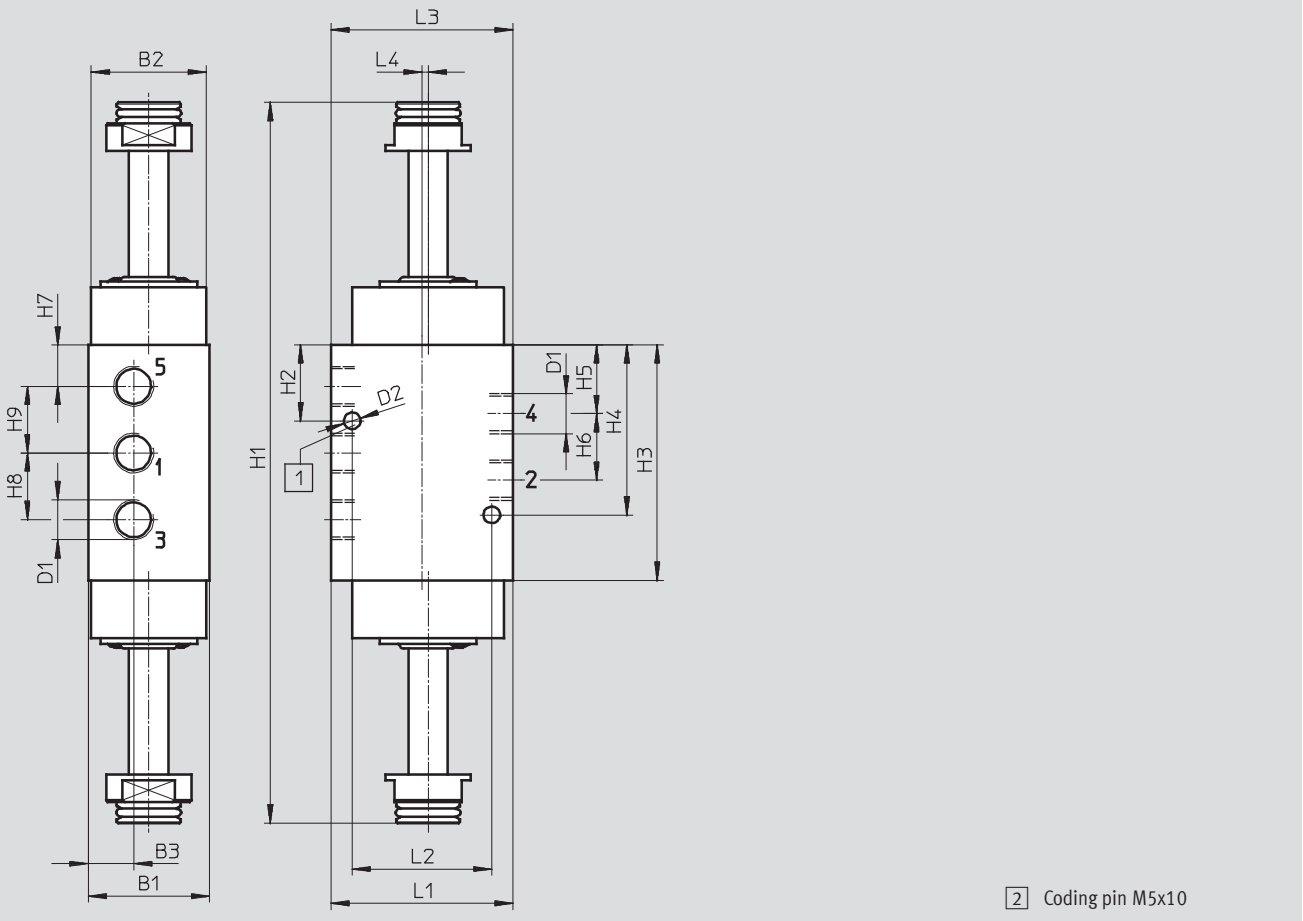

Type	B1	B2	B3	D1	D2	H1	H2	H3	H4	H5	H6	H7	H8	H9	L1	L2	L3	L4
VOFC-L-B52-G14-F9 VOFC-L-B52-G14-F9-A	40	38	15	G¼	5.5	240	25	77.6	56	22.6	22	13.6	22	22	60	46	60	2

Ordering data					
Circuit symbol	Function	Pneumatic connection	Pilot air supply	Part No.	Type
In-line valve					
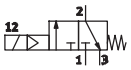	3/2-way, closed, single solenoid	G¼ and NAMUR	Internal	562 857	VOFC-L-M32C-M-FG14-F9
				562 858	VOFC-L-M32C-M-FG14-F9-A
		G¼ and NAMUR, P connection		570 787	VOFC-L-M32C-M-FGP14-F9
		G¼ and NAMUR, P connection		570 788	VOFC-L-M32C-M-FGP14-F9-A
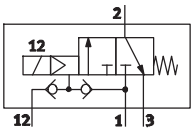	3/2-way, closed, single solenoid	G¼	Internal, external	562 859	VOFC-L-M32C-MC-G14-F9
			Internal, external	562 860	VOFC-L-M32C-MC-G14-F9-A
			Internal, external	562 861	VOFC-L-M32C-MC-N14-F9
			Internal, external	562 862	VOFC-L-M32C-Mc-N14-F9-A
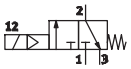	3/2-way, closed, single solenoid	G½ and NAMUR	Internal	562 863	VOFC-L-M32C-M-FG12-F9
				562 864	VOFC-L-M32C-M-FG12-F9-A
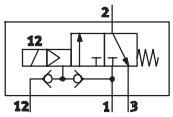	3/2-way, closed, single solenoid	G½	Internal, external	562 865	VOFC-L-M32C-MC-G12-F9
				562 866	VOFC-L-M32C-MC-G12-F9-A
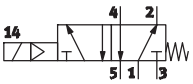	5/2-way, single solenoid	G¼ and NAMUR	Internal	562 867	VOFC-L-M52-M-FG14-F9
				562 868	VOFC-L-M52-M-FG14-F9-A
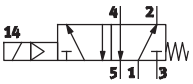	5/2-way, single solenoid	G¼	Internal	562 871	VOFC-L-M52-M-G14-F9
				562 872	VOFC-L-M52-M-G14-F9-A
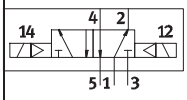	5/2-way, double solenoid	G¼ and NAMUR	Internal	562 869	VOFC-L-B52-FG14-F9
		G¼ and NAMUR		562 870	VOFC-L-B52-FG14-F9-A
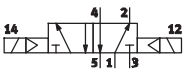		G¼		562 873	VOFC-L-B52-G14-F9
		G¼		562 874	VOFC-L-B52-G14-F9-A

Solenoid valves VOFC

Technical data – 3/2-way valve with ignition protection type Ex-me

Function
3/2-way valve

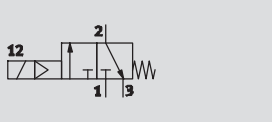

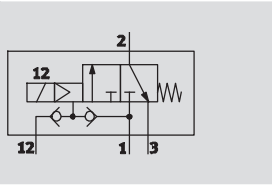

Temperature range
–25 ... +60 °C

Flow rate
600 l/min

Voltage
14 ... 32 V DC

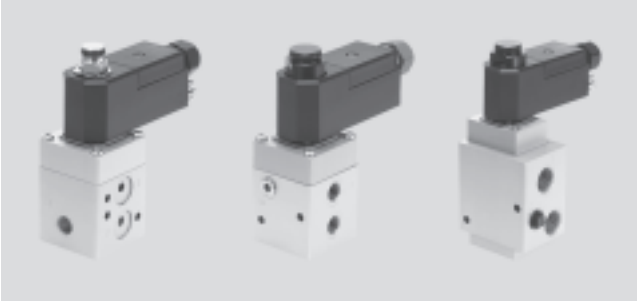

General technical data					
		G¼ and Namur	G¼	NPT¼	G½
Valve function		3/2-way closed, single solenoid			
Pneumatic connection	1	G¼		NPT¼-18	G½
	2	G¼		–	G½
	2	Namur port pattern	–	NPT¼-18	–
	3	G¼		NPT¼-18	G½
	4	Namur port pattern	G¼	NPT¼-18	G½
Width		51 mm			
Design		Piloted piston poppet valve			
Mounting position		Any			
Duty cycle		100%			
Sealing principle		Soft			
Manual override		None			
Reset method		Mechanical spring			
Actuation type		Electrical			
Type of control		Piloted			
Pilot air supply		Internal	Internal, external	Internal, external	Internal, external
Flow rate for piston valve pressurisation	[m³/h]	0.5	0.72	0.72	3.8
		0.65	1.38	1.38	3.8
Direction of flow		Non-reversible			
Electrical connection		Terminal box, cable entry thread M20x1.5			
Reset method		Mechanical spring			
Product weight	[g]	930	880	880	1,210
Response time off	[ms]	12			
Response time on	[ms]	20			
Nominal size	[mm]	6			12
Standard nominal flow rate	[l/min]	600	900	900	3,000

Solenoid valves VOFC

Technical data – 3/2-way valve with ignition protection type Ex-me

Electrical data			G¼ and Namur	G¼	NPT¼	G½
Permissible voltage fluctuations		[%]	–15 … +10			
Max. input power		[W]	–			
Max. input voltage		[V]	–			
Max. input current		[A]	–			
Required current consumption		[mA]	–			
Coil characteristics	DC voltage 24 V	[W]	1.8			
	AC voltage 24 V	[VA]	1.8			

Operating and environmental conditions						
			G¼ and Namur	G¼	NPT¼	G½
Operating medium			Compressed air in accordance with ISO 8573-1:2010 [–:–:–]			
Protection class			IP65			
Operating pressure range		[bar]	2 … 8			
External operating pressure range		[bar]	–	0 … 8		
Temperature of medium		[°C]	–25 … 60			
ATEX category for gas			II 2G			
ATEX category for dust			II 2D			
Explosion ignition protection type for gas			Ex emb II T6, T5			
Explosion ignition protection type for dust			Ex tD A21 IP65 T80°C, T95°C			
Explosion-proof temperature rating		T5:	-20°C <= Ta <=+60°C			
		T6:	-20°C <= Ta <= +50°C			
		T80°C:	-20°C <= Ta <= +50°C			
		T95°C:	-20°C <= Ta <= +60°C			
Certificate issuing authority			PTB 08 ATEX 2042 X			
CE mark (see declaration of conformity)			To EU Explosion Protection Directive (ATEX)			
Safety integrity level		[SIL]	Up to SIL 4 Low Demand mode			–
			Up to SIL 4 High Demand mode			–
Corrosion resistance class CRC[1)]			4			

1) Corrosion resistance class 4 according to Festo standard 940 070
Components with very heavy corrosion exposure. Components in contact with aggressive media, e.g. in food or chemical industries. These applications must, if necessary, be verified by special tests with the media concerned.

Materials

Sectional view

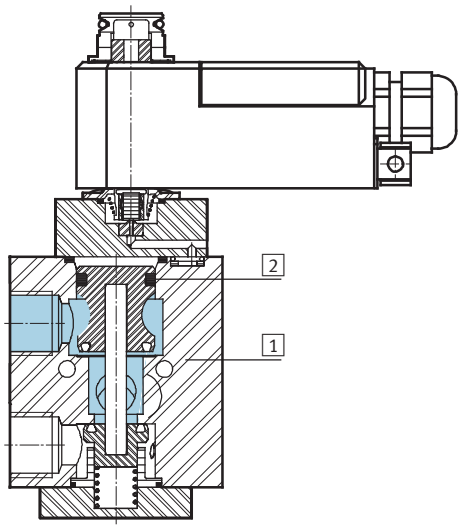

Solenoid valves	G¼ and Namur	G¼	NPT¼	G½
1 Housing	Hard Ematal-anodised aluminium			
2 Seals	Nitrile rubber			
– Note on materials	Contains PWIS (paint-wetting impairment substances), RoHS-compliant			

Dimensions

Download CAD Data ➔ **www.festo.com/us/cad**

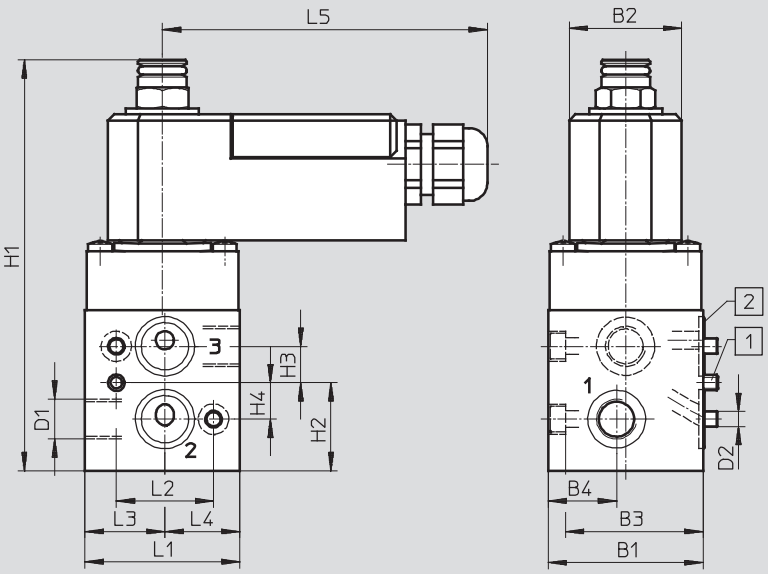

1 Coding pin M5x10

2 O-ring 16x2

Type	B1	B2	B3	B4	D1	D2	H1	H2	H3	H4	L1	L2	L3	L4	L5
VOFC-L-M32C-M-FG14-1UK4-Ex4me	51	37	45.3	22.5	G¼	M5	135.3	29	12	12	51	32	26.3	24.7	107

Solenoid valves VOFC

Technical data – 3/2-way valve with ignition protection type Ex-me

Dimensions Download CAD Data ➔ **www.festo.com/us/cad**

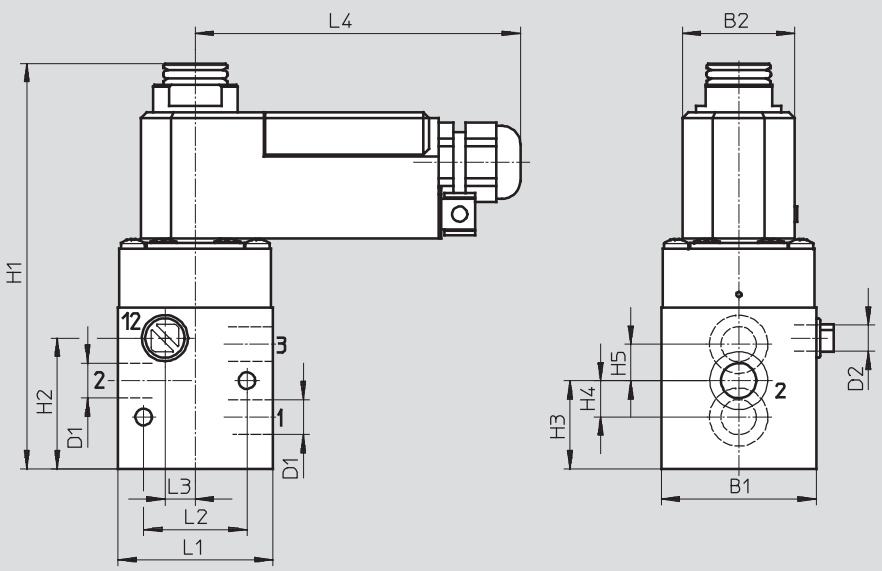

Type	B1	B2	D1	D2	H1	H2	H3	H4	H5	L1	L2	L3	L4
VOFC-L-M32C-MC-G14-1UK4-Ex4me	51	37	G¼	G⅛	133	43	29	12	12	51	34	10	107
VOFC-L-M32C-MC-N14-1UK													

Dimensions Download CAD Data ➔ **www.festo.com/us/cad**

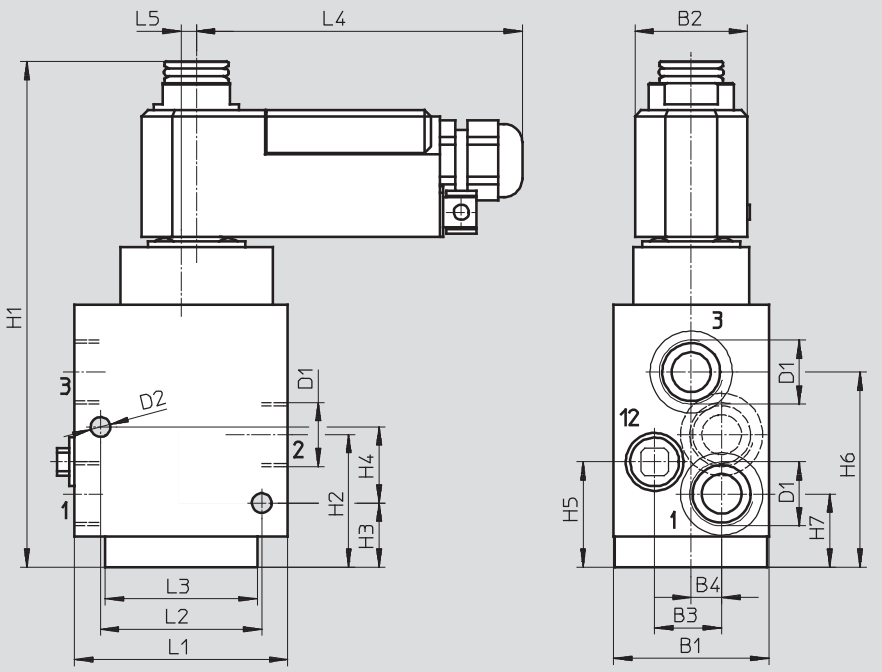

Type	B1	B2	B3	B4	D1	D2	H1	H2	H3	H4	H5	L1	L2	L3	L4	L5
VOFC-L-M32C-MC-G12-1UK4-Ex4me	51	37	22	10	G½	6.5	166	43.5	21	25	34.5	70	53	50	107	5

Solenoid valves VOFC

Technical data – 3/2-way valve with ignition protection type Ex-ia

Function
3/2-way valve

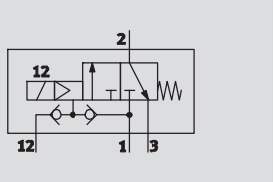

Temperature range
–25 … +60 °C

Flow rate
600 … 900 l/min

Voltage
14 … 32 V DC

General technical data			G¼ and Namur	G¼
Valve function			3/2-way closed, single solenoid	
Pneumatic connection	1		G¼	
	2		G¼	
	2		Namur port pattern	–
	3		G¼	
Width		[mm]	51	
Design			Piloted piston poppet valve	
Mounting position			Any	
Duty cycle			100%	
Sealing principle			Soft	
Manual override			None	
Reset method			Mechanical spring	
Actuation type			Electrical	
Type of control			Piloted	
Pilot air supply			Internal	Internal, external
Flow rate for piston valve pressurisation		[m^3/h]	0.5	0.72
			0.65	1.38
Direction of flow			Non-reversible	
Electrical connection			Terminal box, cable entry thread M20x1.5	
Reset method			Mechanical spring	
Product weight		[g]	930	880
Response time off		[ms]	12	
Response time on		[ms]	20	
Nominal size		[mm]	6	
Standard nominal flow rate		[l/min]	600	900

Electrical data			G¼ and Namur	G¼
Permissible voltage fluctuations		[%]	–15 … +10	–
Max. input power		[W]	1.2	
Max. input voltage		[V]	32	
Max. input current		[A]	0.2	
Required current consumption		[mA]	16	
Coil characteristics	DC voltage 24 V	[V]	14 … 32	

Solenoid valves VOFC

Technical data – 3/2-way valve with ignition protection type Ex-ia

Operating and environmental conditions			
		G¼ and Namur	G¼
Operating medium		Compressed air in accordance with ISO 8573-1:2010 [–:–:–]	
Protection class		IP65	
Operating pressure range	[bar]	2 ... 8	
External operating pressure range	[bar]	–	0 ... 8
Temperature of medium	[°C]	–25 ... 60	
ATEX category for gas		II 2G	
Explosion ignition protection type for gas		Ex ia IIC T6, T5	
Explosion-proof temperature rating	T5:	-30°C <= Ta <= +65°C	
	T6:	-30°C <= Ta <= +50°C	
	T80°C:	-20°C <= Ta <= +50°C	
	T95°C:	-20°C <= Ta <= +60°C	
Certificate issuing authority		PTB 08 ATEX 2038	
CE mark (see declaration of conformity)		To EU Explosion Protection Directive (ATEX)	
Safety integrity level	[SIL]	Up to SIL 4 Low Demand mode	
		Up to SIL 4 High Demand mode	
Corrosion resistance class CRC[1)]		4	

1) Corrosion resistance class 4 according to Festo standard 940 070
Components with very heavy corrosion exposure. Components in contact with aggressive media, e.g. in food or chemical industries. These applications must, if necessary, be verified by special tests with the media concerned.

Materials

Sectional view

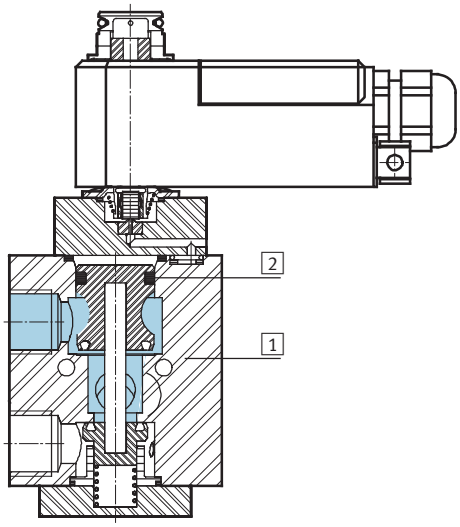

Solenoid valves		G¼ and Namur	G¼
1	Housing	Hard Ematal-anodised aluminium	
2	Seals	Nitrile rubber	
–	Note on materials	Contains PWIS (paint-wetting impairment substances), RoHS-compliant	

Dimensions Download CAD Data ➔ **www.festo.com/us/cad**

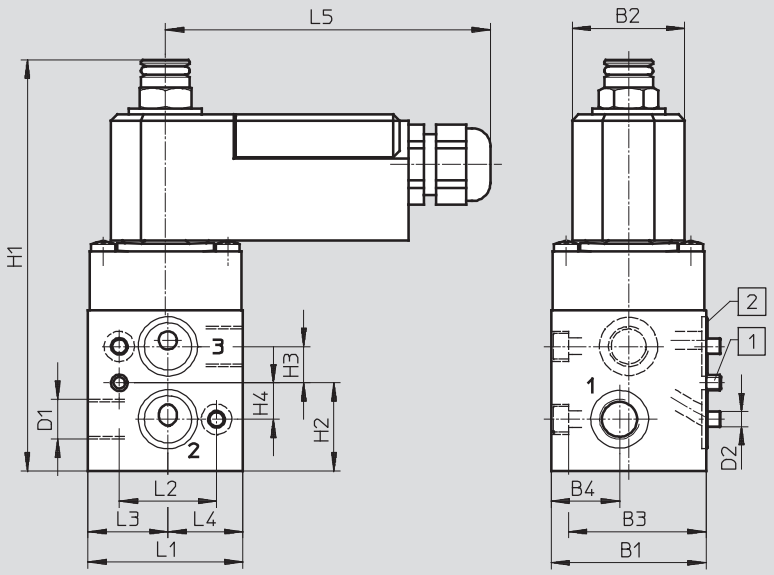

1 Coding pin M5x10
2 O-ring 16x2

Type	B1	B2	B3	B4	D1	D2	H1	H2	H3	H4	L1	L2	L3	L4	L5
VOFC-L-M32C-M-FG14-1K4-EX3A	51	37	45.3	22.5	G¼	M5	135.3	29	12	12	51	32	26.3	24.7	107

Dimensions Download CAD Data ➔ **www.festo.com/us/cad**

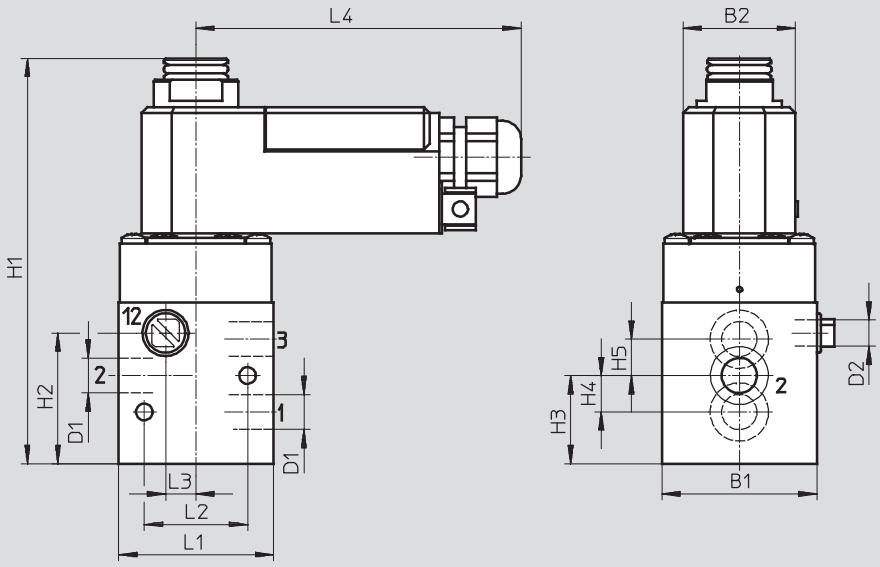

Type	B1	B2	D1	D2	H1	H2	H3	H4	H5	L1	L2	L3	L4
VOFC-L-M32C-MC-G14-1K4-EX3A	51	37	G¼	G⅛	133	43	29	12	12	51	34	10	107

Solenoid valves VOFC

Technical data – 3/2-way valve with ignition protection type Ex-ia

Ordering data						
Circuit symbol	Function	Size	Explosion ignition protection type for gas	Pilot air supply	Part No.	Type
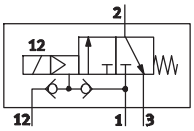	3/2-way closed, single solenoid	G¼	Ex emb II T6, T5	Internal, external	**562 877**	**VOFC-L-M32C-MC-G14-1UK4-Ex4me**
		G¼	Ex ia IIC T6, T5	Internal, external	**562 878**	**VOFC-L-M32C-MC-G14-1K4-Ex3A**
		NPT1/4	Ex emb II T6, T5	Internal	**562 879**	**VOFC-L-M32C-M-N14-1UK4-Ex4me**
		G½	Ex emb II T6, T5		**562 880**	**VOFC-L-M32C-MC-G12-1UK4-Ex4me**
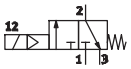	3/2-way closed, single solenoid	G¼ and Namur	Ex emb II T6, T5	Internal	**562 875**	**VOFC-L-M32C-M-FG14-1UK4-Ex4me**
		G¼ and Namur	Ex ia IIC T6, T5		**562 876**	**VOFC-L-M32C-M-FG14-1K4-Ex3A**

Solenoid coils VACC-S13

Technical data

Voltage

24 V AC

Temperature range

−20 … +60 °C

General technical data						
Type			VACC-S13-A1-1	VACC-S13-A1-1U	VACC-S13-A1-2U	VACC-S13-A1-3U
Actuation type			Electrical			
Mounting position			Any			
Duty cycle		[%]	100			
Electrical connection			Plug design to EN 175301-803, type A			
Manual override			None			
Switching position display			None			
Product weight		[g]	210			
Note on materials			Contains PWIS (paint-wetting impairment substances), RoHS-compliant			
Information on solenoid coil materials			Polyamide, polyurethane			
Coil characteristics	DC voltage 24 V	[W]	1.8	1.8	–	–
	AC voltage 24 V	[VA]	–	3	–	–
	DC voltage 110 V	[W]	–	–	1.8	–
	AC voltage 110 V	[VA]	–	–	3	–
	DC voltage 230 V	[W]	–	–	–	1.8
	AC voltage 230 V	[VA]	–	–	–	3

Operating and environmental conditions		
Protection class		IP65
Permissible voltage fluctuations	[%]	−15 … +10
Ambient temperature	[°C]	−20 … +60
Corrosion resistance class CRC[1)]		4

1) Corrosion resistance class 4 according to Festo standard 940 070
Components with very heavy corrosion exposure. Components in contact with aggressive media, e.g. in food or chemical industries. These applications must, if necessary, be verified by special tests with the media concerned.

Dimensions Download CAD Data ➔ **www.festo.com/us/cad**

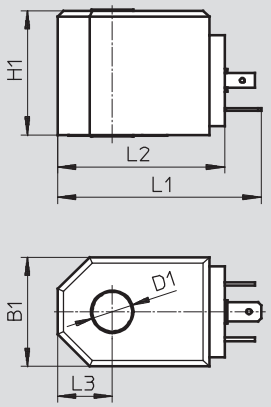

Type	B1	D1	H1	L1	L2	L3
VACC-S13-A1-1 …	36	13.1	41	67	55	18

Solenoid coils VACC-S13

Technical data – Ignition protection type Ex-me

Voltage
24 V DC/AC

Temperature range
–20 … +60 °C

General technical data						
Type			VACC-S13-K4-1U-Ex4me	VACC-S13-K4-2U-Ex4me	VACC-S13-K4-3U-Ex4me	VACC-S13-K4-1UF-Ex4me
Actuation type			Electrical			
Mounting position			Any			
Duty cycle		[%]	100			
Electrical connection			Terminal box, cable entry thread M20x1.5			
Internal fuse protection			–			Fuse
Manual override			None			
Switching position display			None			
Product weight		[g]	330			
Note on materials			Contains PWIS (paint-wetting impairment substances), RoHS-compliant			
Information on solenoid coil materials			PA, PUR			
Coil characteristics	DC voltage 24 V	[W]	1.8	–	–	1.8
	AC voltage 24 V	[VA]	1.8	–	–	1.8
	DC voltage 110 V	[W]	–	1.8	–	–
	AC voltage 110 V	[VA]	–	3	–	–
	DC voltage 230 V	[W]	–	–	1.8	–
	AC voltage 230 V	[VA]	–	–	3	–

Operating and environmental conditions		
Protection class		IP65
Permissible voltage fluctuations	[%]	–15 … +10
ATEX category for gas		II 2G
Explosion ignition protection type for gas		Ex emb IIC T6, T5 Gb
ATEX category for dust		II 2D
Explosion ignition protection type for dust		Ex tb IIIC T80°C, T95°C Db IP65
Designated organisation for the quality inspection		0344
Explosion protection certification outside the EU		EPL Db (BR), EPL Dc (BR), EPL Gb (BR), EPL Gc (BR)
		EPL Db (CN), EPL Dc (CN), EPL Gb (CN), EPL Gc (CN)
		EPL Db (RU), EPL Dc (RU), EPL Gb (RU), EPL Gc (RU)
CE mark (see declaration of conformity)		To EU Explosion Protection Directive (ATEX)
Ambient temperature	[°C]	–20 … +60
Corrosion resistance class CRC[1)]		4

1) Corrosion resistance class 4 according to Festo standard 940 070
Components with very heavy corrosion exposure. Components in contact with aggressive media, e.g. in food or chemical industries. These applications must, if necessary, be verified by special tests with the media concerned.

Solenoid coils VACC-S13

Technical data – Ignition protection type Ex-me

Dimensions Download CAD Data ➔ **www.festo.com/us/cad**

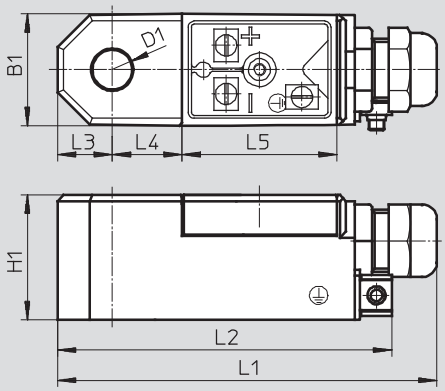

Type	B1	D1	H1	L1	L2	L3	L4	L5
VACC-S13-K4-...-Ex4me	37	13.1	41	125	98	18	23	51

Solenoid coils VACC-S13

Technical data – Ignition protection type Ex-ia

Voltage
24 V DC/AC

Temperature range
–30 ... +60 °C

General technical data		
Type		VACC-S13-K4-Ex3A
Actuation type		Electrical
Mounting position		Any
Duty cycle	[%]	100
Electrical connection		Terminal box, cable entry thread M20x1.5
Manual override		None
Switching position display		None
Product weight	[g]	330
Note on materials		Contains PWIS (paint-wetting impairment substances), RoHS-compliant
Information on solenoid coil materials		Polyamide, polyurethane
Coil characteristics	[V]	14 ... 32
Max. input power	[W]	1.2
Max. input voltage	[V]	32
Max. input current	[A]	0.2
Required current consumption	[mA]	16

Operating and environmental conditions		
Protection class		IP65
ATEX category for gas		II 2G
Explosion ignition protection type for gas		Ex ia IIC T6, T5
Explosion-proof temperature rating		T5: –30°C <=Ta <=+65°C
		T6: –30°C <=Ta <=+50°C
Certificate issuing authority		PTB 08 ATEX 2038
CE mark (see declaration of conformity)		To EU Explosion Protection Directive (ATEX)
Ambient temperature	[°C]	–30 ... +60
Corrosion resistance class CRC[1)]		4

1) Corrosion resistance class 4 according to Festo standard 940 070
Components with very heavy corrosion exposure. Components in contact with aggressive media, e.g. in food or chemical industries. These applications must, if necessary, be verified by special tests with the media concerned.

Solenoid coils VACC-S13

Technical data – Ignition protection type Ex-ia

FESTO

Dimensions Download CAD Data ➔ **www.festo.com/us/cad**

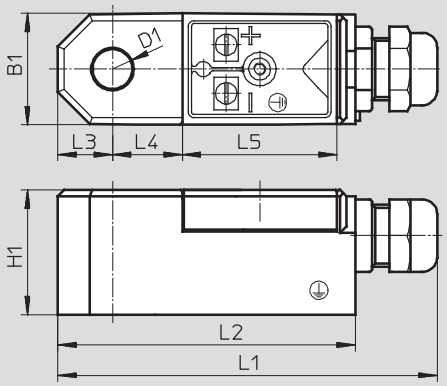

Type	B1	D1	H1	L1	L2	L3	L4	L5
VACC-S13-K4-...-Ex3A	37	13.1	41	125	98	18	23	51

Ordering data

		Part No.	Type
Standard			
		**562 889**	**VACC-S13-A1-1**
		562 890	**VACC-S13-A1-1U**
		562 891	**VACC-S13-A1-2U**
		562 892	**VACC-S13-A1-3U**
Ex-me coil			
		**562 893**	**VACC-S13-K4-1U-Ex4me**
		562 894	**VACC-S13-K4-2U-Ex4me**
		562 895	**VACC-S13-K4-3U-Ex4me**
		570 784	**VACC-S13-K4-1UF-Ex4me**
Ex-ia coil			
		**562 896**	**VACC-S13-K4- -Ex3A**

Flow control plate

Material:
Manifold rail:
Wrought aluminium alloy
Contains paint-wetting impairment substances, RoHS-compliant

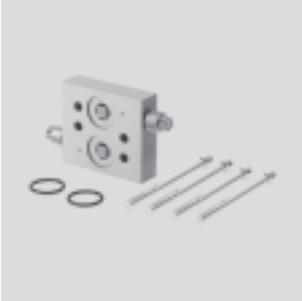

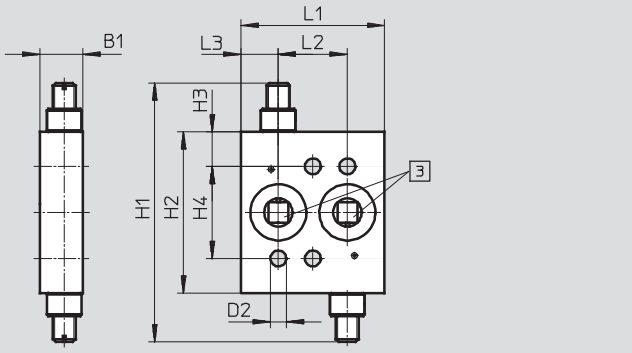

3 Working lines for G¼ and NPT¼ valves

Dimensions [mm] and ordering data											
B1	D2	H1	H2	H3	H4	L1	L2	L3	CRC[1]	Part No.	Type
15	5.5	90	56	12	32	50	24	13	3	**563 395**	**VABF-S7-F1B1P2-F**

1) Corrosion resistance class 3 according to Festo standard 940 070
Components subject to high corrosion stress. External visible parts in direct contact with industrial atmospheres or media such as solvents and cleaning agents, with a predominantly functional requirement for the surface.

Flow control plate

Material:
Manifold rail:
Wrought aluminium alloy
Contains paint-wetting impairment substances, RoHS-compliant

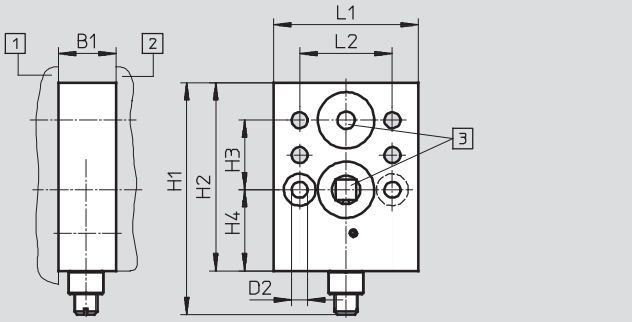

1 Drive
2 Valve
3 Working lines for G¼ and NPT¼ valves

Dimensions [mm] and ordering data											
B1	D2	H1	H2	H3	H4	L1	L2	CRC[1]	Part No.	Type	
20	5.5	80	65	24	28	50	32	3	**563 401**	**VABF-S7-F1B5P1-F**	

1) Corrosion resistance class 3 according to Festo standard 940 070
Components subject to high corrosion stress. External visible parts in direct contact with industrial atmospheres or media such as solvents and cleaning agents, with a predominantly functional requirement for the surface.

Mounting plate

Material:
Wrought aluminium alloy
Contains paint-wetting impairment substances, RoHS-compliant

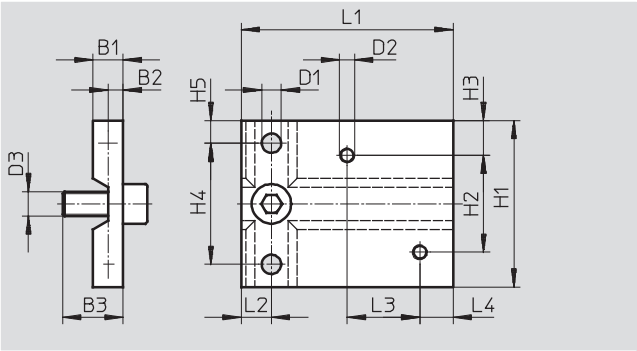

Dimensions [mm] and ordering data																	
B1	B2	B3	D1	D2	D3	H1	H2	H3	H4	H5	L1	L2	L3	L4	CRC[1]	Part No.	Type
10	5	20	6.4	M5	M8	55	32	11.5	40	7.5	70	10	24	11	3	**563 399**	**VAME-S7-P**

1) Corrosion resistance class 3 according to Festo standard 940 070
Components subject to high corrosion stress. External visible parts in direct contact with industrial atmospheres or media such as solvents and cleaning agents, with a predominantly functional requirement for the surface.

Connection plate kit

Material:
Wrought aluminium alloy
Contains paint-wetting impairment substances, RoHS-compliant

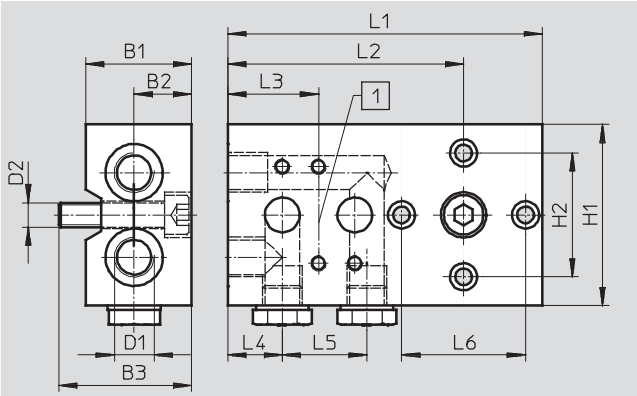

1 Namur flange

Dimensions [mm] and ordering data																
B1	B2	B3	D1	D2	H1	H2	L1	L2	L3	L4	L5	L6	CRC[1]	Part No.	Type
35	19	44	G¼	M8	60	41	104	78	30	18	28	41	3	**563 396**	**VABS-S7-S-G14**

1) Corrosion resistance class 3 according to Festo standard 940 070
Components subject to high corrosion stress. External visible parts in direct contact with industrial atmospheres or media such as solvents and cleaning agents, with a predominantly functional requirement for the surface.

Mounting bracket

Material:
Wrought aluminium alloy
Contains paint-wetting impairment substances, RoHS-compliant

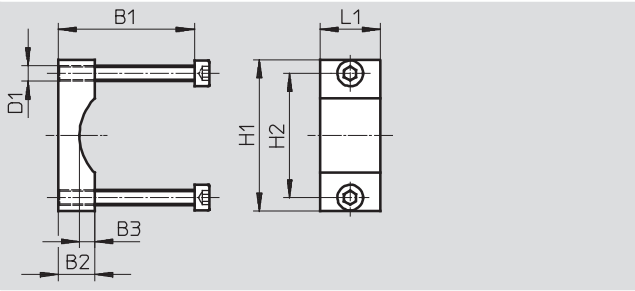

Dimensions [mm] and ordering data									
B1	B2	B3	D1	H1	H2	L1	CRC[1]	Part No.	Type
45/65	12	5	M5	50	41	20	3	**563 403**	**VAME-S7-Y**

1) Corrosion resistance class 3 according to Festo standard 940 070
Components subject to high corrosion stress. External visible parts in direct contact with industrial atmospheres or media such as solvents and cleaning agents, with a predominantly functional requirement for the surface.

Adapter with filter

Note on materials:
Contains paint-wetting impairment substances, RoHS-compliant

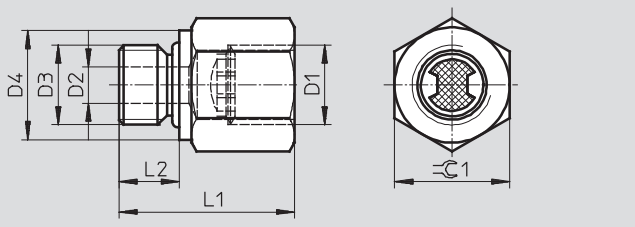

Dimensions [mm] and ordering data									
D1	D2	D3	D4	L1	L2	⌀1	CRC[1]	Part No.	Type
NPT¼	6	G¼	18	29	10	19	1	**563 397**	**NPFV-AF-G14-N14-MF**
G¼	6	G¼	18	29	10	19	1	**563 398**	**NPFV-AF-G14-G14-MF**

1) Corrosion resistance class 1 according to Festo standard 940 070
Components subject to low corrosion stress. Transport and storage protection. Parts that do not have primarily decorative surface requirements, e.g. in internal areas that are not visible or behind covers.

Exhaust protection

Material:
Ethylene propylene rubber
Contains paint-wetting impairment substances, RoHS-compliant

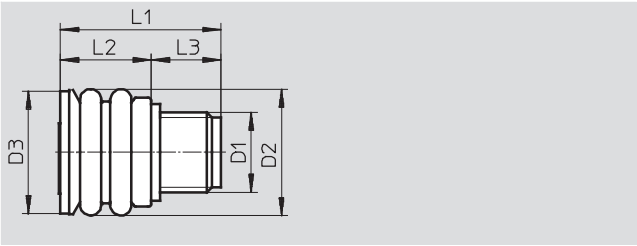

Dimensions [mm] and ordering data								
D1	D2	D3	L1	L2	L3	CRC[1]	Part No.	Type
G¼	21	20.5	26.5	15	11.5	3	**563 400**	**VABD-D3-SN-G14**

1) Corrosion resistance class 3 according to Festo standard 940 070
Components subject to high corrosion stress. External visible parts in direct contact with industrial atmospheres or media such as solvents and cleaning agents, with a predominantly functional requirement for the surface.

Ordering data			
		Part No.	Type
Cable			Technical data ➔ Internet: kmc
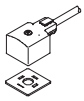		**30 931**	**KMC-1-24 DC-2,5-LED**
		30 932	**KMC-1-230 AC-2,5**
		30 933	**KMC-1-24 DC-5-LED**
		30 934	**KMC-1-230 AC-5**
		30 935	**KMC-1-24-10-LED**
Plug socket for screw terminal connection			Technical data ➔ Internet: mssd
		**34 583**	**MSSD-C**

Product Range and Company Overview

A Complete Suite of Automation Services

Our experienced engineers provide complete support at every stage of your development process, including: conceptualization, analysis, engineering, design, assembly, documentation, validation, and production.

Custom Automation Components
Complete custom engineered solutions

Custom Control Cabinets
Comprehensive engineering support and on-site services

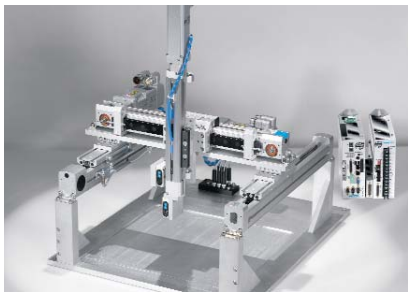

Complete Systems
Shipment, stocking and storage services

The Broadest Range of Automation Components

With a comprehensive line of more than 30,000 automation components, Festo is capable of solving the most complex automation requirements.

Electromechanical
Electromechanical actuators, motors, controllers & drives

Pneumatics
Pneumatic linear and rotary actuators, valves, and air supply

PLCs and I/O Devices
PLC's, operator interfaces, sensors and I/O devices

Supporting Advanced Automation... As No One Else Can!
Festo is a leading global manufacturer of pneumatic and electromechanical systems, components and controls for industrial automation, with more than 12,000 employees in 56 national headquarters serving more than 180 countries. For more than 80 years, Festo has continuously elevated the state of manufacturing with innovations and optimized motion control solutions that deliver higher performing, more profitable automated manufacturing and processing equipment. Our dedication to the advancement of automation extends beyond technology to the education and development of current and future automation and robotics designers with simulation tools, teaching programs, and on-site services.

Quality Assurance, ISO 9001 and ISO 14001 Certifications

Festo Corporation is committed to supply all Festo products and services that will meet or exceed our customers' requirements in product quality, delivery, customer service and satisfaction.

To meet this commitment, we strive to ensure a consistent, integrated, and systematic approach to management that will meet or exceed the requirements of the ISO 9001 standard for Quality Management and the ISO 14001 standard for Environmental Management.

9001: CERTCC5-16248-2006-AQ-ESN-TGA
ISO 9001
ISO 14001
DNV
Certified Company
14001: CERTCC5-16248A-2006-AQ-ESN-TGA

FSC
Printed on recycled paper at New Horizon Graphic, Inc., FSC certified as an environmentally friendly printing plant.

Festo North America

Festo Regional Contact Center

5300 Explorer Drive
Mississauga, Ontario L4W 5G4
Canada

USA Customers:

For ordering assistance,
Call: 1.800.99.FESTO (1.800.993.3786)
Fax: 1.800.96.FESTO (1.800.963.3786)
Email: customer.service@us.festo.com

For technical support,
Call: 1.866.GO.FESTO (1.866.463.3786)
Fax: 1.800.96.FESTO (1.800.963.3786)
Email: product.support@us.festo.com

Canadian Customers:

Call: 1.877.GO.FESTO (1.877.463.3786)
Fax: 1.877.FX.FESTO (1.877.393.3786)
Email: festo.canada@ca.festo.com

USA Headquarters

Festo Corporation
395 Moreland Road
P.O. Box 18023
Hauppauge, NY 11788, USA
www.festo.com/us

USA Sales Offices

Appleton
North 922 Tower View Drive, Suite N
Greenville, WI 54942, USA

Boston
120 Presidential Way, Suite 330
Woburn, MA 01801, USA

Chicago
1441 East Business Center Drive
Mt. Prospect, IL 60056, USA

Dallas
1825 Lakeway Drive, Suite 600
Lewisville, TX 75057, USA

Detroit – Automotive Engineering Center
2601 Cambridge Court, Suite 320
Auburn Hills, MI 48326, USA

New York
395 Moreland Road
Hauppauge, NY 11788, USA

Silicon Valley
4935 Southfront Road, Suite F
Livermore, CA 94550, USA

United States

USA Headquarters, East: Festo Corp., 395 Moreland Road, Hauppauge, NY 11788
Phone: 1.631.435.0800; Fax: 1.631.435.8026;
Email: info@festo-usa.com **www.festo.com/us**

Canada

Headquarters: Festo Inc., 5300 Explorer Drive, Mississauga, Ontario L4W 5G4
Phone: 1.905.624.9000; Fax: 1.905.624.9001;
Email: festo.canada@ca.festo.com **www.festo.ca**

Mexico

Headquarters: Festo Pneumatic, S.A., Av. Ceylán 3, Col. Tequesquinahuac,
54020 Tlalnepantla, Edo. de México
Phone: 011 52 [55] 53 21 66 00; Fax: 011 52 [55] 53 21 66 65;
Email: festo.mexico@mx.festo.com **www.festo.com/mx**

Central USA
Festo Corporation
1441 East Business
Center Drive
Mt. Prospect, IL 60056, USA
Phone: 1.847.759.2600
Fax: 1.847.768.9480

Western USA
Festo Corporation
4935 Southfront Road,
Suite F
Livermore, CA 94550, USA
Phone: 1.925.371.1099
Fax: 1.925.245.1286

Festo Worldwide

Argentina Australia Austria Belarus Belgium Brazil Bulgaria Canada Chile China Colombia Croatia Czech Republic Denmark Estonia Finland France Germany Great Britain Greece Hong Kong Hungary India Indonesia Iran Ireland Israel Italy Japan Latvia Lithuania Malaysia Mexico Netherlands New Zealand Norway Peru Philippines Poland Romania Russia Serbia Singapore Slovakia Slovenia South Africa South Korea Spain Sweden Switzerland Taiwan Thailand Turkey Ukraine United States Venezuela

www.festo.com