Solenoid valves VUVB/valve terminals VTUB, NPT

FESTO

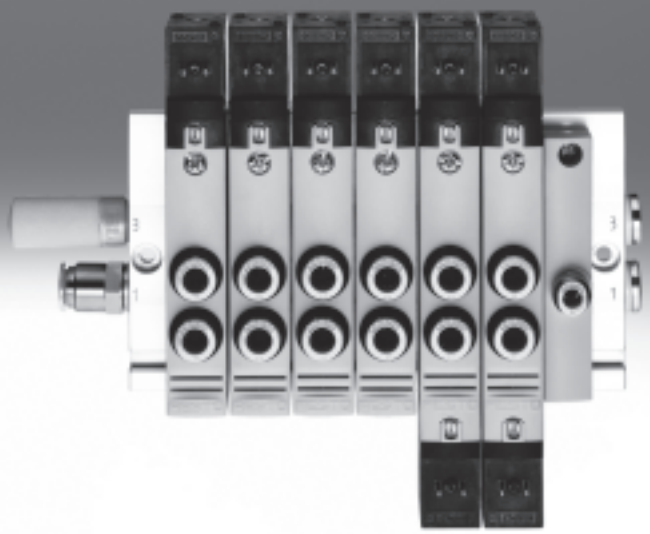

Solenoid valves VUVB/valve terminals VTUB, NPT

Key features

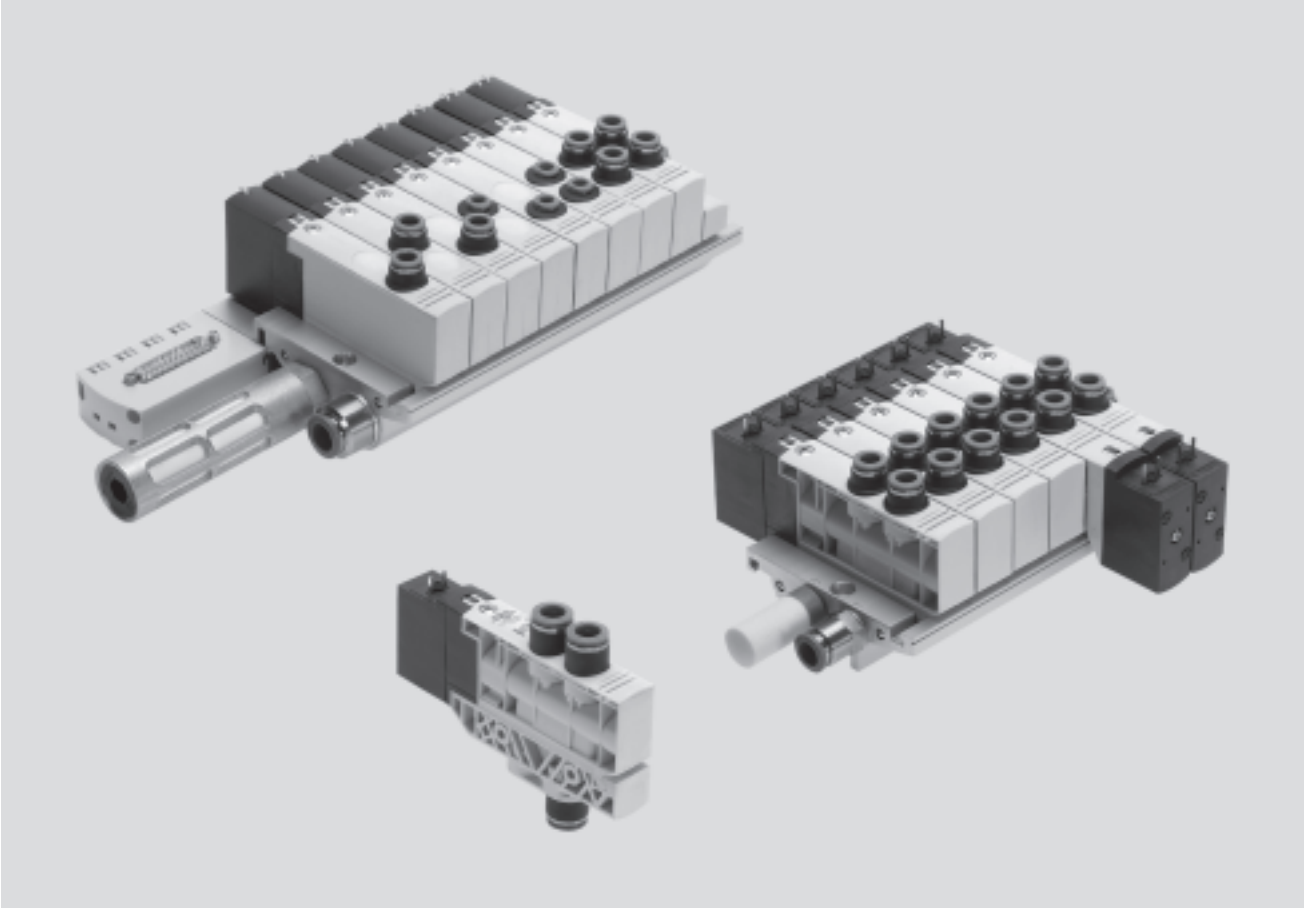

Innovative

- Valve terminal for a wide range of pneumatic applications
- Standardised from the individual valve to the multi-pin plug
- Great flexibility during planning, assembly and operation
- Selectable valve functions; 3/2- and 4/2-way function also suitable for vacuum applications
- Wide selection of optimally tailored accessories for flow rates from 200 to 1,000 l/min

Versatile

- Room for expansion with 2 ... 10 valve positions on one valve terminal
- Use of individual valves in combination with an individual sub-base
- Flexibility of the pneumatic working lines provides a practical solution to different requirements
- Two pressure zones (additional zones on request)
- High pressure range –0.9 ... 8 bar
- Extensive operating voltage range from 12 V DC to 230 V AC

Reliable

- Manual override
- Durable thanks to tried-and-tested piston spool valves
- Sturdy thanks to the polymer housing and metal manifold rail
- Fast troubleshooting thanks to an LED signal status display in the plug socket with cable or on the valve in the case of the design with multi-pin plug

Easy to mount

- Ready-to-install and tested unit
- Lower ordering, installation and commissioning costs
- Secure mounting on wall or H-rail

Note

Valve terminals are available for 4, 6, 8 and 10 valve positions in connection sizes ½ NPT and ¼ NPT.

Solenoid valves VUVB/valve terminals VTUB, NPT

Key features

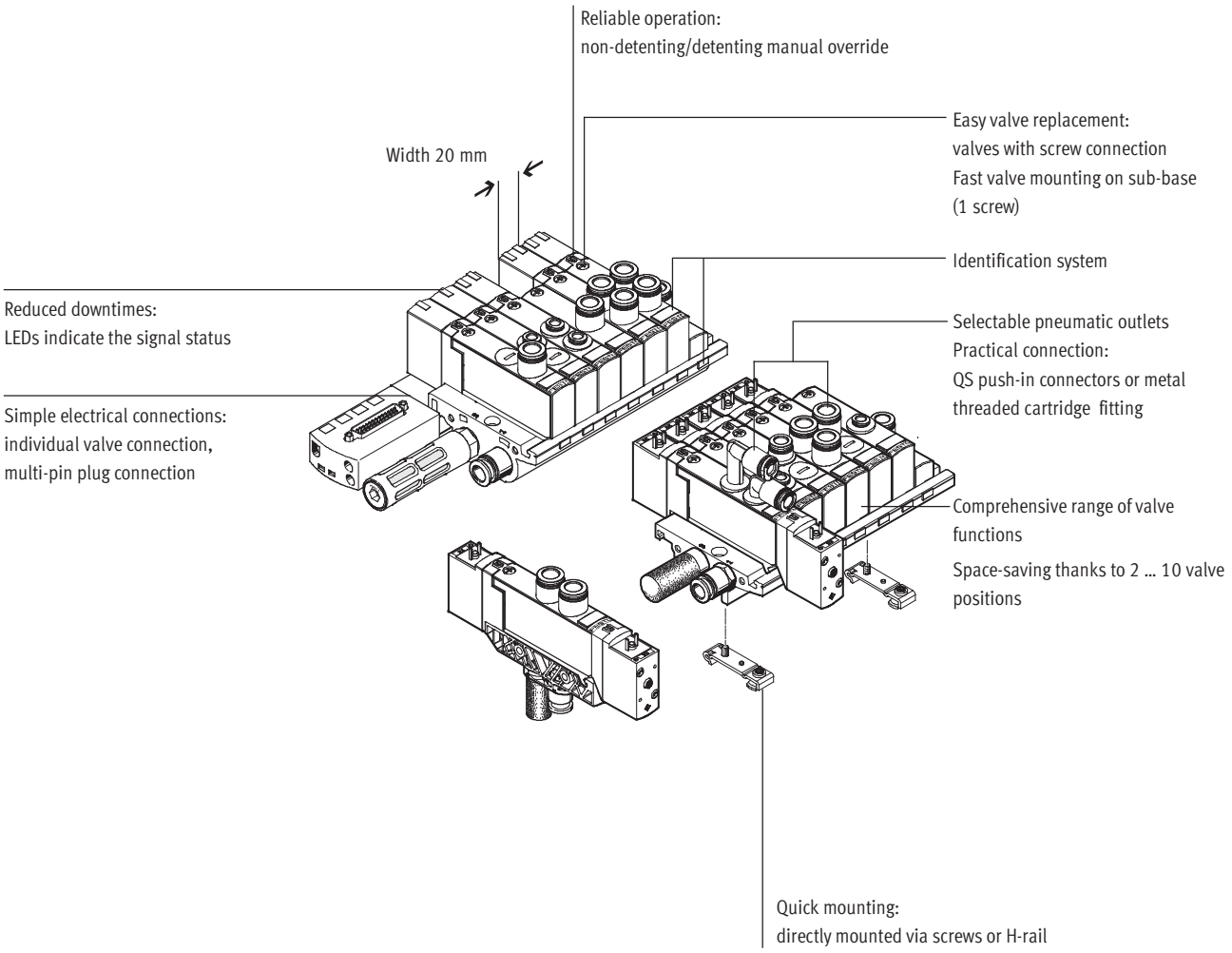

Equipment options

Valve functions

- 3/2-way valve, normally open
- 3/2-way valve, normally closed
- 4/2-way valve, single solenoid
- 4/2-way valve, double solenoid

Electrical connection options

Individual connection/individual valve connection

- 2 ... 10 valve positions with manifold rail
- 2 ... 20 solenoid coils
- Via plug socket with cable with either LED or illuminating seal

Multi-pin plug

- 4 ... 10 valve positions/ max. 20 solenoid coils
- Sub-D

Valve terminal configurator

Download CAD Data ➔ **www.festo.com/us/cad**

A valve terminal configurator is available to help you select a suitable valve terminal VTUB, which makes it much easier to order the right product. Valve terminals VTUB are ordered via an ident. code.

All valve terminals are supplied fully assembled and individually tested. This reduces assembly and installation time to a minimum.

Ordering system for valve terminal VTUB

- Individual electrical connection
- Electrical multi-pin plug connection

➔ Internet: vtub

Solenoid valves VUVB/valve terminals VTUB, NPT

Key features

Pressure zone supply module

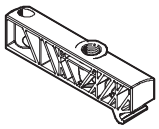

The pressure zone supply module for pilot air supply is included in the scope of delivery of the manifold rail.

The pressure zone supply module for internal or external pilot air supply ensures even greater flexibility.

Manifold rail

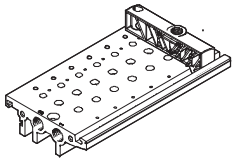

The manifold rail features a groove into which the semi in-line valves are latched and secured with just one screw.

The valve functions 4/2-way single solenoid, 4/2-way double solenoid, 3/2-way normally closed and 3/2-way normally open are available. All semi in-line valves are available with the cartridges QSP for the tubing diameters ¼, 5/16, and ⅜. 4/2-way valves are also supplied without cartridges, allowing users to fit cartridges of their choice or blanking plugs.

Pressure zone supply module

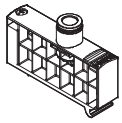

The pressure zone supply module occupies one valve position and can be used as an additional supply or for supplying a pressure zone.

Individual valve

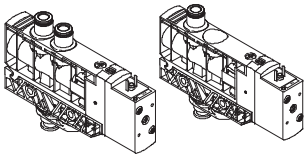

An individual valve can be ordered as an in-line valve (comprising semi in-line valve and sub-base ready assembled) in all functions. The tubing diameters ¼ and 5/16 are available in this case.
The in-line valve, however, can also be assembled using an individual sub-base and semi in-line valve.
All tubing diameters and the variant without cartridge are available in this case.

Blanking plate

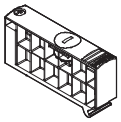

Plate without valve function for reserving valve positions on a valve terminal.

Valves and blanking plates are attached to the manifold rail using one screw.

Sub-base

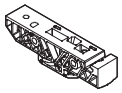

Individual sub-bases can be equipped with any valve.

Electrical connection is by means of a standardised connector plug, square design to EN 175301-803, type C.

Pre-assembled plug sockets with cable or plugs for self-assembly are offered for this.

Pneumatic connection

Supply and exhaust

The valves are supplied pneumatically via manifold rails or individual sub-bases.

The manifold rails contain common lines for compressed air supply, exhaust and pilot exhaust for all valves.

The common lines can be connected
- at the left (code L),
- at the right (code R) or
- at both ends (no code).

Pilot air supply

In-line valves are available with internal and external pilot air supply. With semi in-line valves the mounting position of the insert in the sub-base determines whether the valves are actuated internally or externally.

Internal pilot air supply
An internal pilot air supply can be selected if the supply pressure is between 2 and 8 bar. The pilot air supply is branched from duct 1 in the pressure zone supply module in this case.

External pilot air supply
An external pilot air supply must be used if the supply pressure is between –0.9 and +2 bar. The pilot air supply is supplied via duct 12/14 of the pressure zone supply module in this case.

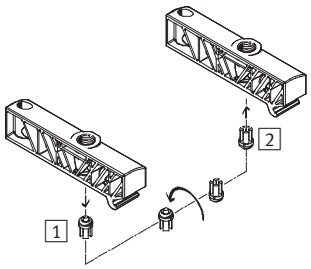

If the selector is installed as shown in position 1, it means that the pilot air supply will be branched internally from duct 1.

If the selector is turned 180° and installed as shown in position 2, it means that the valve manifold is set to external pilot air supply.

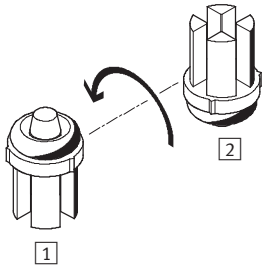

Solenoid valves VUVB/valve terminals VTUB, NPT

Product range overview – Individual valves and manifold valves

Function	Version	Type	Nominal flow rate [l/min]	Pneumatic connection	Operating voltage [V]	Semi in-line valve	In-line valve	Pilot air supply		➔ Page/Internet
								Internal	External	
3/2-way valves	Single solenoid valve for individual connection and valve manifold									
	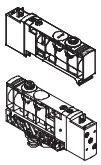	VUVB-...-M32-...	500	QS-¼	24 DC 110 AC	■	■	■	■	14
			800	QS-5/16		■	■	–	■	
			1000	QS-⅜		■	–	■	■	
			1000	QX[1]	24 DC 110 AC 230 AC 12 DC/24 AC	■	–	–	■	

Function	Version	Type	Nominal flow rate [l/min]	Pneumatic connection	Operating voltage [V]	Semi in-line valve	In-line valve	Pilot air supply		➔ Page/Internet
								Internal	External	
4/2-way valves	Single solenoid valve for individual connection and valve manifold									
	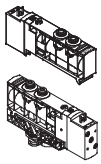	VUVB-...-M42-...	500	QS-¼	24 DC 110 AC	■	■	■	■	14
			800	QS-5/16		■	■	■	■	
			1000	QS-⅜		■	–	–	■	
			1000	QX[1]	24 DC 110 AC 230 AC 12 DC/24 AC	■	–	–	■	
	Double solenoid valve for individual connection and valve manifold									
	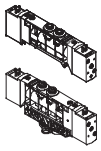	VUVB-...-B42-...	500	QS-¼	24 DC 110 AC	■	■	■	■	14
			800	QS-5/16		■	■	■	■	
			1000	QS-⅜		■	–	–	■	
			1000	QX[1]	24 DC 110 AC 230 AC 12 DC/24 AC	■	–	–	■	

1) Cartridge not included

Solenoid valves VUVB/valve terminals VTUB, NPT

Product range overview – Terminal valves

FESTO

Function	Version	Type	Nominal flow rate [l/min]	Pneumatic connection	Operating voltage [V]	Semi in-line valve	Pilot air supply External	➔ Page/ Internet
3/2-way valves	Single solenoid valve for valve terminal with electrical multi-pin plug connection							
	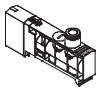	VUVB-...-M32-...	500	QS-¼	24 DC	■	■	34
			800	QS-5/16		■	■	
			1000	QS-⅜		■	■	
			1000	QX[1]		■	■	

Function	Version	Type	Nominal flow rate [l/min]	Pneumatic connection	Operating voltage [V]	Semi in-line valve	Pilot air supply External	➔ Page/ Internet
4/2-way valves	Single solenoid valve for valve terminal with electrical multi-pin plug connection							
	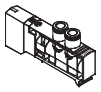	VUVB-...-M42-...	500	QS-¼	24 DC	■	■	34
			800	QS-5/16		■	■	
			1000	QS-⅜		■	■	
			1000	QX[1]		■	■	
	Double solenoid valve for valve terminal with electrical multi-pin plug connection							
		VUVB-...-B42-...	500	QS-¼	24 DC	■	■	34
			800	QS-5/16		■	■	
			1000	QS-⅜		■	■	
			1000	QX[1]		■	■	

1) Cartridge not included

Solenoid valves VUVB/valve terminals VTUB, NPT

Product range overview

Function	Version	Type	Pneumatic connection	Valve positions					Pilot air supply		➔ Page/ Internet
				2	4	6	8	10	Internal	External	
Manifold rail	For valve manifold with individual electrical connection										
	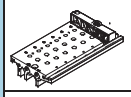	VABM	½ NPT	■	■	■	■	■	■	■	22
	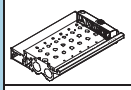	VABM	¼ NPT	■	■	■	■	■	■	■	23
	For valve terminal with electrical multi-pin plug connection										
	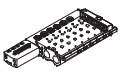	VABM-...-M1	½ NPT	–	■	■	■	■	■	■	40

Function	Version	Type	Pilot air supply		➔ Page/ Internet
			Internal	External	
Sub-base	Individual valve				
		VABS	■	■	24

Function	Version	Type	Pneumatic connection	Use	➔ Page/ Internet
Pressure zone supply module		VABF	QS-⅜	For additional supply to the manifold rail	42

Function	Version	Type	Use	➔ Page/ Internet
Blanking plate		VABB	For covering vacant positions	43

Function	Version	Type	Use	➔ Page/ Internet
Separator		VABD	For duct separation	43

Function	Version	Type	Use	➔ Page/ Internet
H-rail mounting kit		VAME	For mounting on the H-rail NRH-35-2000	48

Function	Version	Type	➔ Page/ Internet
Cartridge		QSP...	47

Solenoid valves VUVB, NPT

Peripherals overview

Overview – Solenoid valve VUVB

Individual position with individual electrical connection

These peripherals are ordered via individual parts/accessories.

An individual valve can be ordered as an in-line valve or as a fully assembled semi in-line valve on a sub-base.

The in-line valve is available with ¼NPT or 5/16NPT push-in connectors. The semi in-line valve on sub-base is available with ¼, 5/16 or 3/8NPT push-in connectors or as a variant without a cartridge.

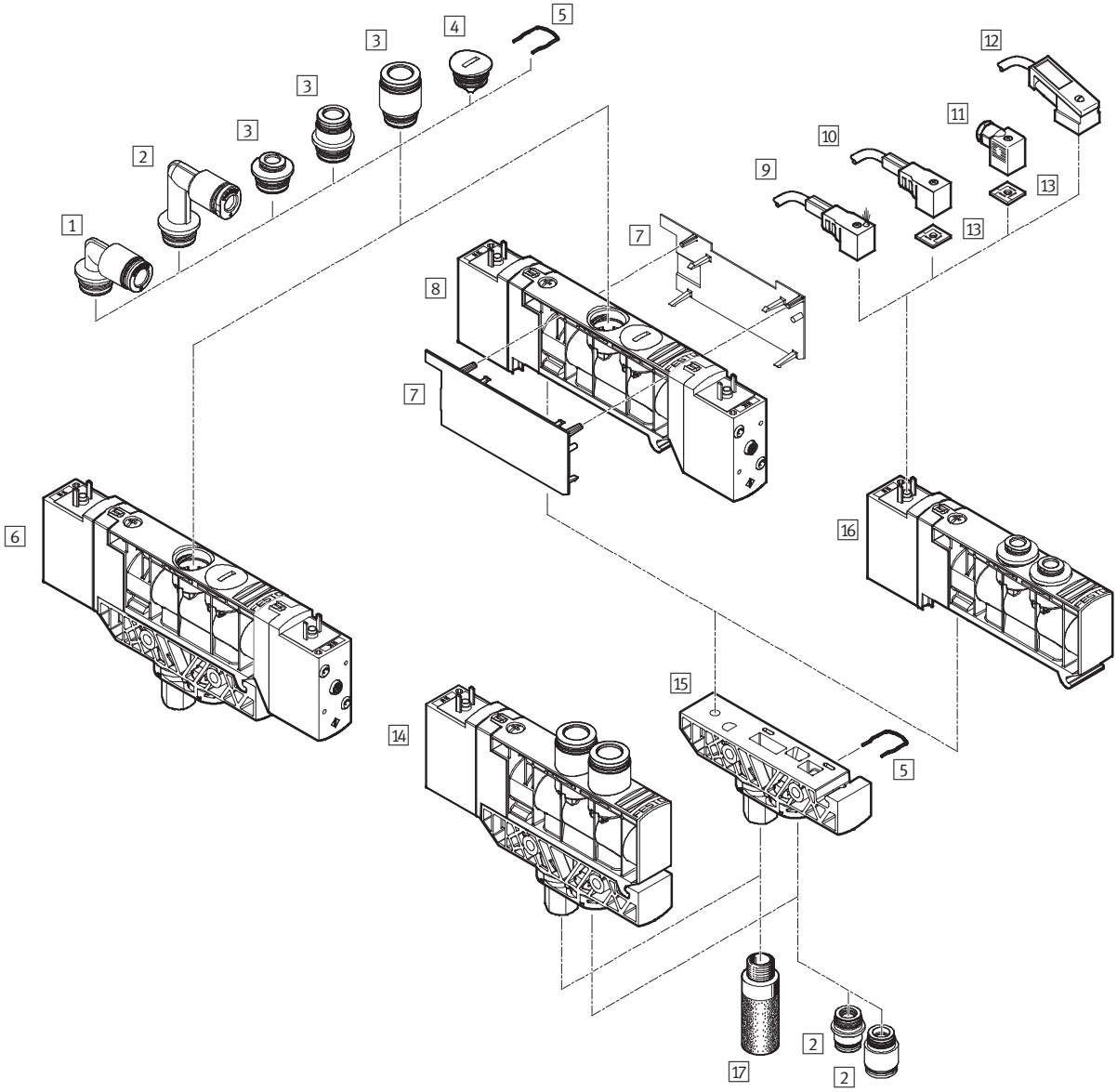

Accessories			
		Brief description	➔ Page/Internet
1	Cartridge QSPL	For connecting compressed air tubing with standard O.D.	47
2	Cartridge QSPLL	For connecting compressed air tubing with standard O.D.	47
3	Cartridge QSP	For connecting compressed air tubing with standard O.D.	47
4	Blanking plug QSPC18	For sealing the pneumatic connections on the valve	48
5	Retaining clip	For fitting cartridges and blanking plugs (included in the scope of delivery of cartridge QSP... and blanking plug QSPC18)	–
6	Double solenoid valve VUVB-L-...-B-...	In-line valve with adapter for NPT	20
7	Cover for valve housing VAMC	–	45
8	Double solenoid valve VUVB-S-...-B-...	Semi in-line valve	14
9	Plug socket with cable with LED KMEB-1-...-LED	For indicating the signal status	49
10	Plug socket with cable KMEB-1-230AC-...	Can be used up to 230 V	49
11	Plug socket MSSD-EB	–	49
12	Plug socket with cable with LED KMEB-2-24-...	For indicating the signal status	49
13	Illuminating seal MEB-LD	For indicating the signal status	49
14	Single solenoid valve VUVB-L-...-M-...	In-line valve with adapter for NPT	20
15	Sub-base VABS-B6-P...	For individual valve with adapter for NPT	46
16	Single solenoid valve VUVB-S-...-M-...	Semi in-line valve	20
17	Silencer U	For fitting in exhaust ports	48

Overview – Solenoid valve VUVB

Manifold assembly/valve terminal with individual electrical connections

- "Individual connection" code: ET

Valve terminals with individual electrical connections are available in gradations from 2 to max. 10 valve positions.

Valve positions can either be fitted with a valve or a blanking plate for future expansions.

In total up to 20 solenoid valves can be actuated.

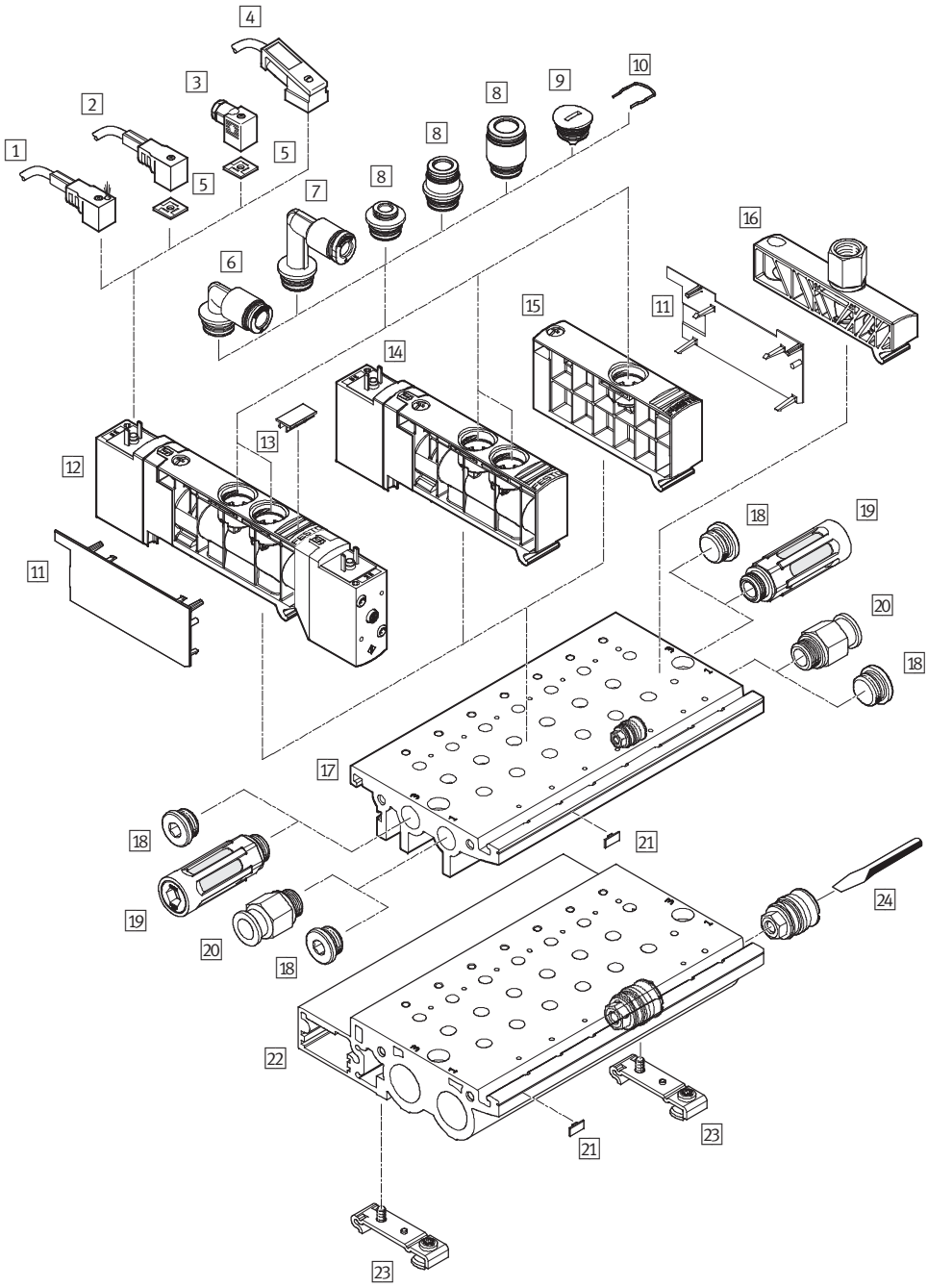

Solenoid valves VUVB, NPT

Peripherals overview

Accessories			
		Brief description	➔ Page/Internet
1	Plug socket with cable with LED KMEB-1-...-LED	For indicating the signal status	49
2	Plug socket with cable KMEB-1-230AC-...	Can be used up to 230 V	49
3	Plug socket MSSD-EB	–	49
4	Plug socket with cable with LED KMEB-2-24-...	For indicating the signal status	49
5	Illuminating seal MEB-LD	For indicating the signal status	49
6	Cartridge QSPL-...	For connecting compressed air tubing with standard O.D.	47
7	Cartridge QSPLL-...	For connecting compressed air tubing with standard O.D.	47
8	Cartridge QSP-...	For connecting compressed air tubing with standard O.D.	47
9	Blanking plug QSPC18	For sealing the pneumatic connections on the valve	48
10	Retaining clip	For fitting cartridges and blanking plugs (included in the scope of delivery of the cartridge QSP... and the blanking plug QSPC18)	
11	Cover for valve housing VAMC	–	45
12	Double solenoid valve VUVB-...-B	–	20
13	Inscription label IBS-9x17	For identifying the valves	48
14	Single solenoid valve VUVB-...-M	–	20
15	Blanking plate/pressure zone supply module VABF/VABB	Pressure zone supply module VABF: with cartridge Blanking plate VABB: for vacant position, with blanking plug	42/43
16	Pressure zone supply module	For pilot air supply with adapter for NPT (included in the scope of delivery of the manifold rail VABM)	–
17	Manifold rail VABM-B6-E-N14-...	Pneumatic connection ¼ NPT, for connecting max. 10 valves	22
18	Blanking plug B	–	48
19	Silencer U	For fitting in exhaust ports	48
20	Push-in fitting QS	For connecting compressed air tubing with standard O.D.	47
21	Inscription label MH-BZ-80X	For identifying the manifold rail	48
22	Manifold rail VABM-B6-E-N12-...	Pneumatic connection ½ NPT, for connecting max. 10 valves	23
23	H-rail mounting kit VAME	For mounting on the H-rail NRH-35-2000	48
24	Separator for pressure zones VABD	For mounting in the manifold rail	43

Solenoid valves VUVB, NPT

Type codes – Individual valves and manifold valves

VUVB	–	L	–	M32C	–	A	Z	D	–	T14	–	1	C1

Valve series	
VUVB	Solenoid valve

Constructional design	
L	In-line valve
S	Semi in-line valve

Valve function	
M32C	3/2-way valve, normally closed
M32U	3/2-way valve, normally open
M42	4/2-way valve, single solenoid
B42	4/2-way valve, double solenoid

Reset method	
–	None (double solenoid)
A	Pneumatic reset

Pilot air supply	
–	Internal
Z	External

Manual override	
D	Non-detenting/detenting

Pneumatic connection	
T532	For tubing O.D. 5/32
T14	For tubing O.D. 1/4
T516	For tubing O.D. 5/16
T38	For tubing O.D. 3/8
QX	Without push-in connector

Operating voltage	
1	24 V DC
2A	110 V AC
3A	230V
5W	12 V DC/24 V AC

Electrical connection	
C1	Plug socket connection pattern to EN 175301-803, type C

Solenoid valves VUVB, NPT

Technical data – Individual valves and manifold valves

Voltage
12, 24 V DC
24, 110 V AC

Pressure
–0.9 ... +8 bar

Temperature range
–5 ... +50 °C

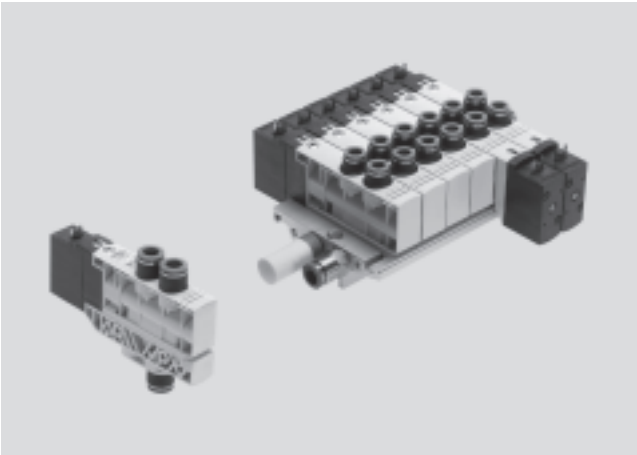

General technical data					
Valve function			3/2-way, single solenoid	4/2-way, single solenoid	4/2-way, double solenoid
Design			Piston spool valve		
Sealing principle			Soft		
Actuation type			Electric		
Reset method			Pneumatic spring		–
Type of control			Piloted		
Pilot air supply			Internal or external		
Direction of flow			Non-reversible		
Exhaust function			No flow control		
Manual override			Non-detenting, detenting		
Type of mounting			Via through-hole		
Mounting position			Any		
Nominal size		[mm]	7		
Standard nominal flow rate	qnN	[l/min]	200 (5/32NPT), 500 (1/4NPT), 800 (5/16NPT), 1000 (3/8NPT)		
Width		[mm]	20		
Product weight	In-line valve	[g]	170	170	240
	Semi in-line valve	[g]	150	150	220

Operating and environmental conditions		
Operating medium		Compressed air in accordance with ISO 8573-1:2010 [7:4:4]
Note on operating/pilot medium		Operation with lubricated medium possible (in which case lubricated operation will always be required)
Operating pressure	[bar]	–0.9 ... +8
Operating pressure for valve terminal with internal pilot air supply	[bar]	2 ... 8
Pilot pressure	[bar]	2 ... 8
Ambient temperature	[°C]	–5 ... +50
Temperature of medium	[°C]	–5 ... +50
Corrosion resistance class CRC		1 1)
Note on materials		RoHS-compliant

1) Corrosion resistance class 1 according to Festo standard 940 070
Components subject to low corrosion stress. Transport and storage protection. Parts that do not have primarily decorative surface requirements, e.g. in internal areas that are not visible or behind covers.

Note

A filter must be installed upstream of valves operated in vacuum mode.
This prevents any foreign matter in the intake air getting into the valve
(e.g. when operating a suction cup).

Electrical data			
Electrical connection			Plug, square design to EN 175301-803, type C
Nominal operating voltage	DC	[V]	12, 24
	AC	[V]	24, 110, 230
Permissible voltage fluctuations		[%]	±10
Electrical power consumption	24 V DC	[W]	1.5
	110 V AC	[VA]	Pull: 3.1, hold: 2.2
Protection class to EN 60529			IP65 (in combination with plug socket)

Valve switching times [ms]			
Valve function	3/2-way, single solenoid	4/2-way, single solenoid	4/2-way, double solenoid
On	20	20	–
Off	20	20	–
Changeover	–	–	15

Pilot pressure p2 as a function of operating pressure p1

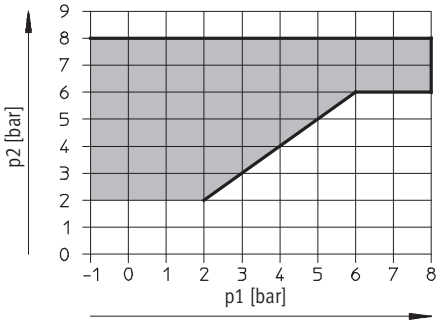

Materials

Sectional view – Single solenoid valve

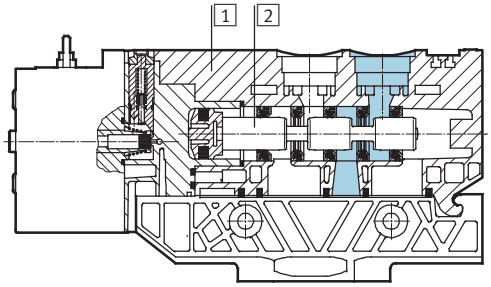

Sectional view – Double solenoid valve

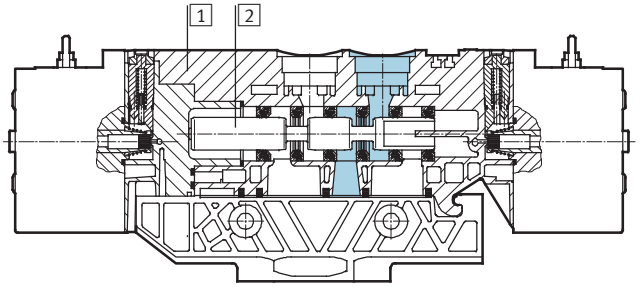

1	Housing	Reinforced polyamide
2	Piston spool	Wrought aluminium alloy
–	Seals	Nitrile rubber, hydrogenated nitrile rubber, fluoro elastomer

Dimensions – 3/2-way and 4/2-way valve, single solenoid Download CAD Data ➔ **www.festo.com/us/cad**

In-line valve

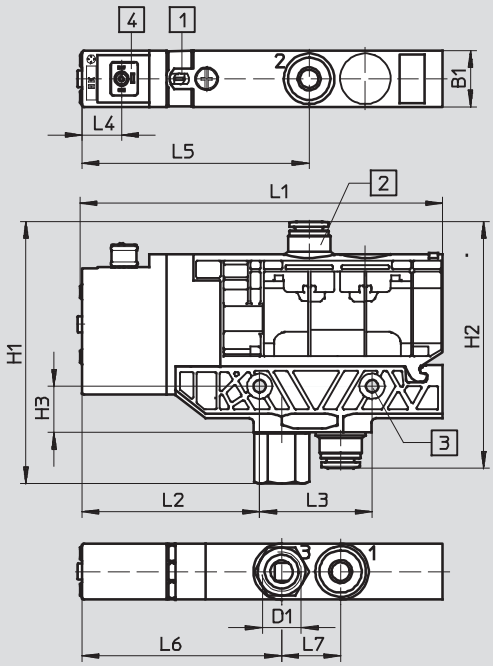

1 Manual override
2 Fitting QS
3 Through-hole for screw M4
4 Plug socket connection pattern to EN 175301-803

Type	B1	D1	H1	H2	H3	L1	L2	L3	L4	L5	L6	L7
VUVB-L-M32...-T14	20	¼ NPT	87	83.1	16.5	129	63.2	40	14	80.8	71	21
VUVB-L-M32...-T516			93	89.9								

Dimensions – 3/2-way and 4/2-way valve, single solenoid Download CAD Data ➔ **www.festo.com/us/cad**

Semi in-line valve

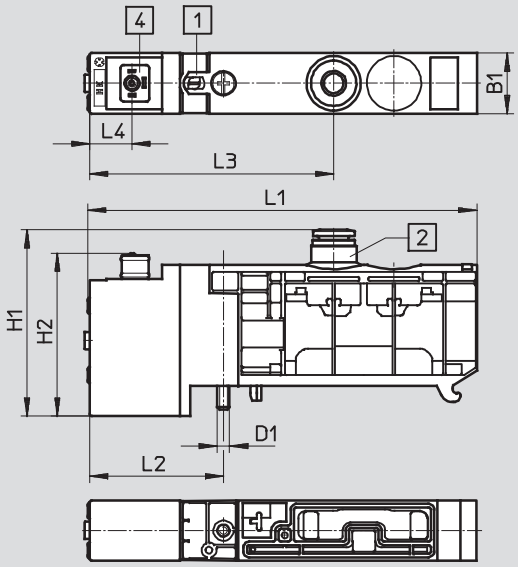

1 Manual override
2 Fitting QS
4 Plug socket connection pattern to EN 175301-803, type C

Type	B1	D1	H1	H2	L1	L2	L3	L4
VUVB-S-M32...-T14	20	M4	54	53.9	129	44.3	80.8	14
VUVB-S-M32...-T516			61					
VUVB-S-M32...-T38			65					

Dimensions – 4/2-way valve, double solenoid Download CAD Data ➔ **www.festo.com/us/cad**

In-line valve

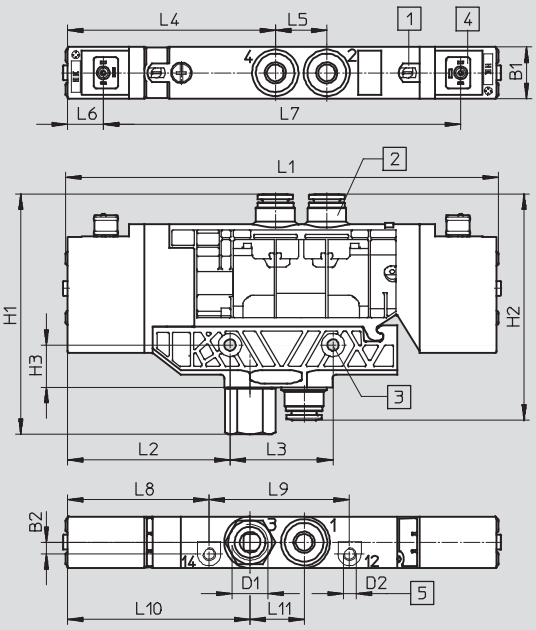

1 Manual override
2 Fitting QS
3 Through-hole for screw M4
4 Plug socket connection pattern to EN 175301-803, type C
5 Port for external pilot air

Type	B1	B2	D1	D2	H1	H2	H3	L1	L2	L3	L4	L5	L6	L7	L8	L9	L10	L11
VUVB-L-B42...-T14	20	4.6	¼NPT	M5	87	83.1	16.5	168.2	63.2	40	80.8	20	14	140.2	55.1	54.55	71	21
VUVB-L-B42...-T516					93	89.9												

Dimensions – 4/2-way valve, double solenoid Download CAD Data ➔ **www.festo.com/us/cad**

Semi in-line valve

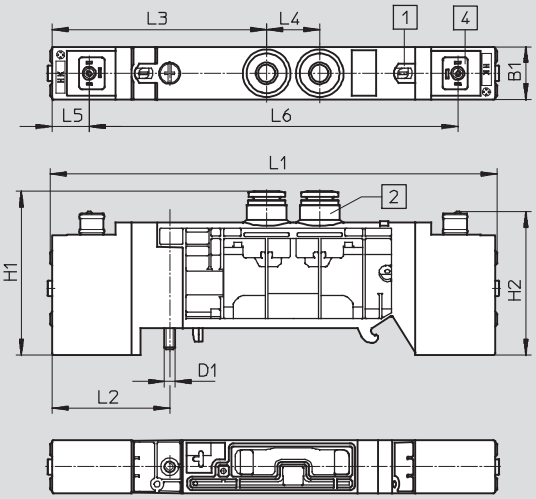

1 Manual override
2 Fitting QS
4 Plug socket connection pattern to EN 175301-803, type C

Type	B1	D1	H1	H2	L1	L2	L3	L4	L5	L6
VUVB-S-B42...-T14	20	M4	54	53.9	168.2	44.3	80.8	20	14	138.8
VUVB-S-B42...-T516			61							
VUVB-S-B42...-T38			65							

Dimensions – Manifold assembly Download CAD Data ➔ **www.festo.com/us/cad**

Manifold rail ¼ NPT

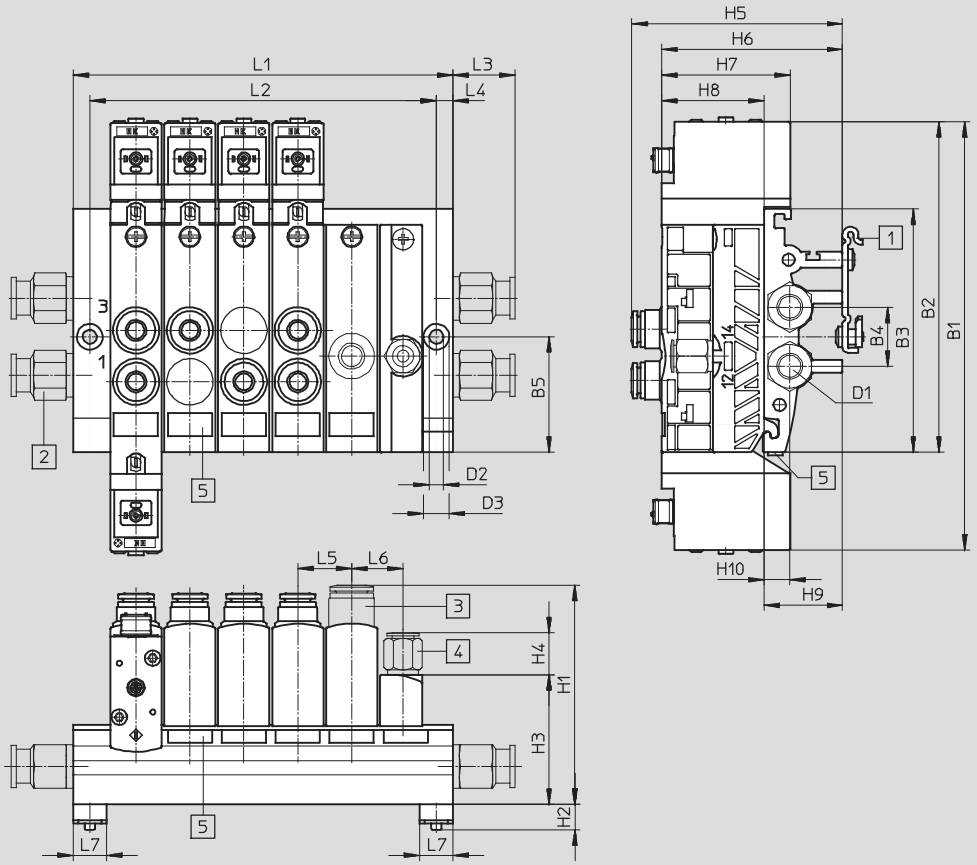

1 Attachment for mounting rail NRH-35-2000 (optional)

2 Push-in fittings (optional)

3 Cartridge (optional, only with pressure zone supply module)

4 Push-in fitting for external pilot air supply, with adapter for NPT

5 Inscription label (optional)

6 Selector plate internal/external pilot air

Type	B1	B2	B3	B4	B5	D1	D2 H13	D3 H13	H1	H2	H3	H4	H6	H7	H8	H9	H10	L1 ±0.1	L2 ±0.1	L3	L4	L5	L6	L7
VTUB-2...	166.8	128.3	94.7	23	45	¼NPT	5.5	10	88.4	10	50.5	30.6	70.5	50.1	40	31	10	85	72	24.1	6.5	21	20	13
VTUB-4...																		127	114					
VTUB-6...																		169	156					
VTUB-8...																		211	198					
VTUB-10...																		253	240					

Type	H5
QSPK18-1/4-U-100	74.9
QSPK18-5/16-U-100	81.7
QSPK18-3/8-U-100	85.5

Dimensions – Manifold assembly Download CAD Data ➔ **www.festo.com/us/cad**

Manifold rail ½ NPT

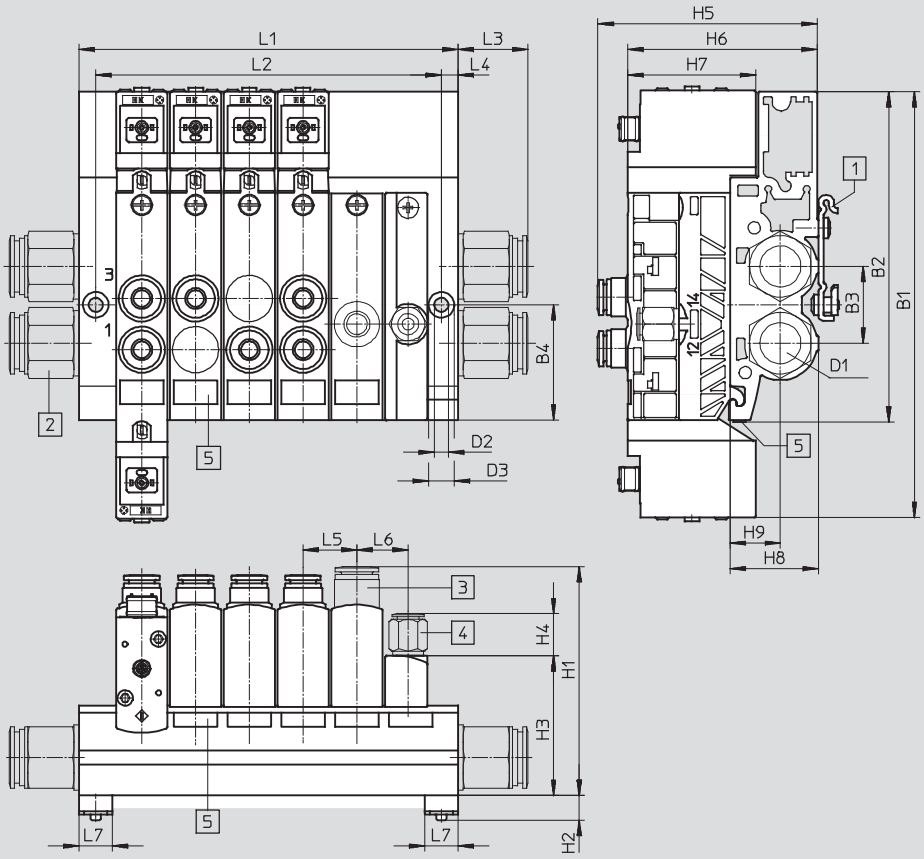

1 Attachment for mounting rail NRH-35-2000 (optional)

2 Push-in fittings (optional)

3 Cartridge (optional, only with pressure zone supply module)

4 Push-in fitting for external pilot air supply, with adapter for NPT

5 Inscription label (optional)

6 Selector plate internal/external pilot air

Type	B1	B2	B3	B4	D1	D2 H13	D3 H13	H1	H2	H3	H4	H6	H7	H8	H9	L1 ±0.1	L2 ±0.1	L3	L4	L5	L6	L7
VTUB-2...	166.8	129.5	30	45	½ NPT	5.5	10	89.4	10	54.5	30.6	74	50.1	34.5	19.7	85	72	27.3	6.5	21	20	13
VTUB-4...																127	114					
VTUB-6...																169	156					
VTUB-8...																211	198					
VTUB-10...																253	240					

Type	H5
QSPK18-1/4-U-100	78.9
QSPK18-5/16-U-100	85.7
QSPK18-3/8-U-100	89.5

Solenoid valves VUVB, NPT

Technical data – Individual valves and manifold valves

Ordering data – In-line valves						
Circuit symbol	Code	Description	Voltage	Pneumatic connection	Part No.	Type
3/2-way valves, single solenoid						
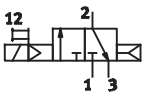	K	Normally closed, internal pilot air supply, pneumatic spring return	24 V DC	QS-¼	**568280**	**VUVB-L-M32C-AD-T14-1C1**
				QS-5/16	**568281**	**VUVB-L-M32C-AD-T516-1C1**
			110 V AC	QS-¼	**568296**	**VUVB-L-M32C-AD-T14-2AC1**
				QS-5/16	**568297**	**VUVB-L-M32C-AD-T516-2AC1**
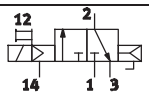	K	Normally closed, external pilot air supply, pneumatic spring return	24 V DC	QS-¼	**568288**	**VUVB-L-M32C-AZD-T14-1C1**
				QS-5/16	**568289**	**VUVB-L-M32C-AZD-T516-1C1**
			110 V AC	QS-¼	**568304**	**VUVB-L-M32C-AZD-T14-2AC1**
				QS-5/16	**568305**	**VUVB-L-M32C-AZD-T516-2AC1**
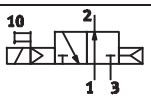	N	Normally open, internal pilot air supply, pneumatic spring return	24 V DC	QS-¼	**568282**	**VUVB-L-M32U-AD-T14-1C1**
				QS-5/16	**568283**	**VUVB-L-M32U-AD-T516-1C1**
			110 V AC	QS-¼	**568298**	**VUVB-L-M32U-AD-T14-2AC1**
				QS-5/16	**568299**	**VUVB-L-M32U-AD-T516-2AC1**
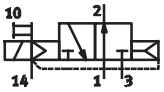	N	Normally open, external pilot air supply, pneumatic spring return	24 V DC	QS-¼	**568290**	**VUVB-L-M32U-AZD-T14-1C1**
				QS-5/16	**568291**	**VUVB-L-M32U-AZD-T516-1C1**
			110 V AC	QS-¼	**568306**	**VUVB-L-M32U-AZD-T14-2AC1**
				QS-5/16	**568307**	**VUVB-L-M32U-AZD-T516-2AC1**
4/2-way valves, single solenoid						
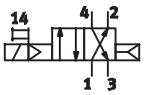	M	Normally open, internal pilot air supply, pneumatic spring return	24 V DC	QS-¼	**568284**	**VUVB-L-M42-AD-T14-1C1**
				QS-5/16	**568285**	**VUVB-L-M42-AD-T516-1C1**
			110 V AC	QS-¼	**568300**	**VUVB-L-M42-AD-T14-2AC1**
				QS-5/16	**568301**	**VUVB-L-M42-AD-T516-2AC1**
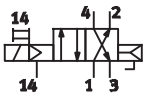	M	Normally open, external pilot air supply, pneumatic spring return	24 V DC	QS-¼	**568292**	**VUVB-L-M42-AZD-T14-1C1**
				QS-5/16	**568293**	**VUVB-L-M42-AZD-T516-1C1**
			110 V AC	QS-¼	**568308**	**VUVB-L-M42-AZD-T14-2AC1**
				QS-5/16	**568309**	**VUVB-L-M42-AZD-T516-2AC1**
4/2-way valves, double solenoid						
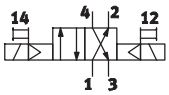	J	Normally open, internal pilot air supply	24 V DC	QS-¼	**568286**	**VUVB-L-B42-D-T14-1C1**
				QS-5/16	**568287**	**VUVB-L-B42-D-T516-1C1**
			110 V AC	QS-¼	**568302**	**VUVB-L-B42-D-T14-2AC1**
				QS-5/16	**568303**	**VUVB-L-B42-D-T516-2AC1**
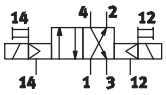	J	Normally open, external pilot air supply	24 V DC	QS-¼	**568294**	**VUVB-L-B42-ZD-T14-1C1**
				QS-5/16	**568295**	**VUVB-L-B42-ZD-T516-1C1**
			110 V AC	QS-¼	**568310**	**VUVB-L-B42-ZD-T14-2AC1**
				QS-5/16	**568311**	**VUVB-L-B42-ZD-T516-2AC1**

Ordering data – Semi in-line valves for sub-base or manifold rail						
Circuit symbol	Code	Description	Voltage	Pneumatic connection	Part No.	Type
3/2-way valves, single solenoid						
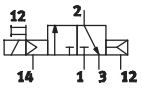	K	Normally closed, external pilot air supply, pneumatic spring return	24 V DC	QS-¼	568312	VUVB-S-M32C-AZD-T14-1C1
				QS-5/16	568313	VUVB-S-M32C-AZD-T516-1C1
				QS-⅜	568314	VUVB-S-M32C-AZD-T38-1C1
				Without push-in connector	573993	VUVB-S-M32C-AZD-QX-1C1
			110 V AC	QS-¼	568324	VUVB-S-M32C-AZD-T14-2AC1
				QS-5/16	568325	VUVB-S-M32C-AZD-T516-2AC1
				QS-⅜	568326	VUVB-S-M32C-AZD-T38-2AC1
				Without push-in connector	573995	VUVB-S-M32C-AZD-QX-2AC1
			230 V AC	Without push-in connector	573997	VUVB-S-M32C-AZD-QX-3AC1
			12 V DC / 24 V AC		573999	VUVB-S-M32C-AZD-QX-5WC1
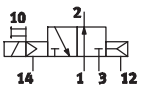	N	Normally open, external pilot air supply, pneumatic spring return	24 V DC	QS-¼	568315	VUVB-S-M32U-AZD-T14-1C1
				QS-5/16	568316	VUVB-S-M32U-AZD-T516-1C1
				QS-⅜	568317	VUVB-S-M32U-AZD-T38-1C1
				Without push-in connector	573994	VUVB-S-M32U-AZD-QX-1C1
			110 V AC	QS-¼	568327	VUVB-S-M32U-AZD-T14-2AC1
				QS-5/16	568328	VUVB-S-M32U-AZD-T516-2AC1
				QS-⅜	568604	VUVB-S-M32U-AZD-T38-2AC1
				Without push-in connector	573996	VUVB-S-M32U-AZD-QX-2AC1
			230 V AC	Without push-in connector	573998	VUVB-S-M32U-AZD-QX-3AC1
			12 V DC / 24 V AC		574000	VUVB-S-M32U-AZD-QX-5WC1
4/2-way valves, single solenoid						
	M	Normally open, external pilot air supply, pneumatic spring return	24 V DC	QS-¼	568318	VUVB-S-M42-AZD-T14-1C1
				QS-5/16	568319	VUVB-S-M42-AZD-T516-1C1
				QS-⅜	568320	VUVB-S-M42-AZD-T38-1C1
			110 V AC	QS-¼	568605	VUVB-S-M42-AZD-T14-2AC1
				QS-5/16	568606	VUVB-S-M42-AZD-T516-2AC1
				QS-⅜	568607	VUVB-S-M42-AZD-T38-2AC1
			24 V DC	Without push-in connector	537534	VUVB-S-M42-AZD-QX-1C1
			110 V AC		537632	VUVB-S-M42-AZD-QX-2AC1
			230 V AC		537636	VUVB-S-M42-AZD-QX-3AC1
			12 V DC/ 24 V AC		545376	VUVB-S-M42-AZD-QX-5WC1
4/2-way valves, double solenoid						
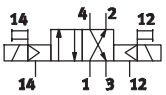	J	Normally open, external pilot air supply	24 V DC	QS-¼	568321	VUVB-S-B42-ZD-T14-1C1
				QS-5/16	568322	VUVB-S-B42-ZD-T516-1C1
				QS-⅜	568323	VUVB-S-B42-ZD-T38-1C1
			110 V AC	QS-¼	568608	VUVB-S-B42-ZD-T14-2AC1
				QS-5/16	568609	VUVB-S-B42-ZD-T516-2AC1
				QS-⅜	568610	VUVB-S-B42-ZD-T38-2AC1
			24 V DC	Without push-in connector	537535	VUVB-S-B42-ZD-QX-1C1
			110 V AC		537633	VUVB-S-B42-ZD-QX-2AC1
			230 V AC		537637	VUVB-S-B42-ZD-QX-3AC1
			12 V DC/ 24 V AC		545377	VUVB-S-B42-ZD-QX-5WC1

Solenoid valves VUVB, NPT

Technical data – Manifold rail

Manifold rail ¼ NPT VABM

Material:
Wrought aluminium alloy

Dimensions Download CAD Data ➔ **www.festo.com/us/cad**

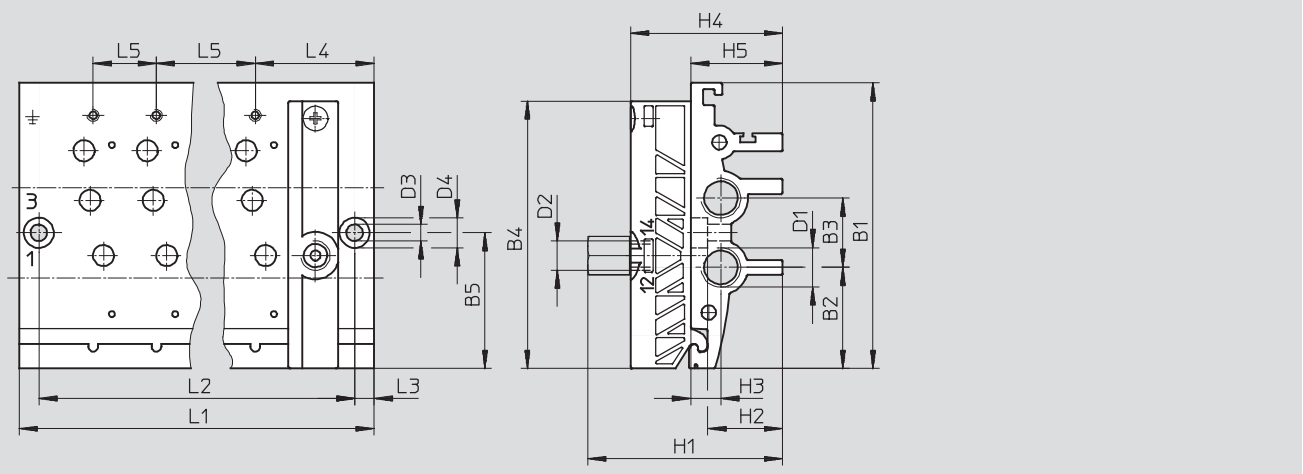

Note

The manifold rail is supplied with an adapter for NPT.

Type	L1 ±0.1	L2 ±0.1	L3 ±0.1	L4 ±0.1	L5 ±0.1	B1 ±0.1	B2 ±0.1	B3 ±0.1	B4	B5	D1	D2	D3 H13	D4 H13	H1	H2	H3 ±0.2	H4	H5 ±0.2
VABM-B6-E-N14-2	85	72	6.5	39.5	21	94.7	33.5	23	88.7	45	¼NPT	⅛NPT	5.5	10	64.7	24.8	10	50.5	30.5
VABM-B6-E-N14-4	127	114																	
VABM-B6-E-N14-6	169	156																	
VABM-B6-E-N14-8	211	198																	
VABM-B6-E-N14-10	253	240																	

Ordering data

Valve positions	CRC	Part No.	Type
2	2[1)]	**568185**	**VABM-B6-E-N14-2**
4	2[1)]	**568186**	**VABM-B6-E-N14-4**
6	2[1)]	**568187**	**VABM-B6-E-N14-6**
8	2[1)]	**568188**	**VABM-B6-E-N14-8**
10	2[1)]	**568189**	**VABM-B6-E-N14-10**

1) Corrosion resistance class 2 according to Festo standard 940 070
Components subject to moderate corrosion stress. Externally visible parts with primarily decorative surface requirements which are in direct contact with a normal industrial environment or media such as coolants or lubricating agents.

Solenoid valves VUVB, NPT

Technical data – Manifold rail

Manifold rail ½ NPT VABM

Material:
Wrought aluminium alloy

Dimensions Download CAD Data ➔ **www.festo.com/us/cad**

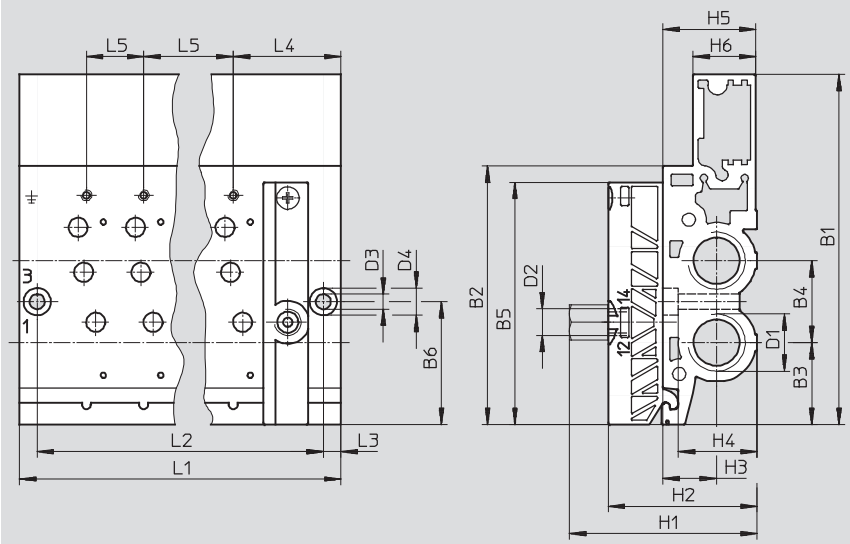

Note

The manifold rail is supplied with an adapter for NPT.

Type	L1 ±0.1	L2 ±0.1	L3 ±0.1	L4 ±0.1	L5 ±0.1	B1 ±0.25	B2 ±0.2	B3 ±0.2	B4 ±0.2	B5	B6	D1	D2	D3 H13	D4 H13	H1	H2	H3 ±0.2	H4	H5 ±0.2	H6
VABM-B6-E-N12-2	85	72	6.5	39.5	21	128.25	94.7	30	30	88.7	45	½ NPT	⅛ NPT	5.5	10	68.7	54.8	19.7	28.8	34	23
VABM-B6-E-N12-4	127	114																			
VABM-B6-E-N12-6	169	156																			
VABM-B6-E-N12-8	211	198																			
VABM-B6-E-N12-10	253	240																			

Ordering data

Valve positions	CRC	Part No.	Type
2	2[1)]	**570725**	**VABM-B6-E-N12-2**
4	2[1)]	**570726**	**VABM-B6-E-N12-4**
6	2[1)]	**570727**	**VABM-B6-E-N12-6**
8	2[1)]	**570728**	**VABM-B6-E-N12-8**
10	2[1)]	**570729**	**VABM-B6-E-N12-10**

1) Corrosion resistance class 2 according to Festo standard 940 070
Components subject to moderate corrosion stress. Externally visible parts with primarily decorative surface requirements which are in direct contact with a normal industrial environment or media such as coolants or lubricating agents.

Sub-base VABS

Material:
Reinforced polyamide

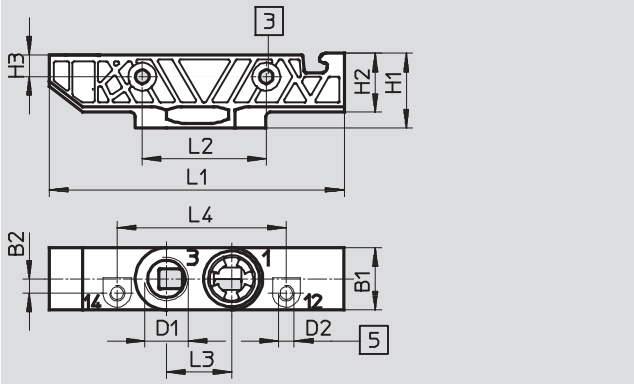

3 Through-hole for screw M4
5 Port for external pilot air

Note

Sub-base has G-thread.
Adapter for NPT thread (9396) must be ordered separately.
➔ Page 48

Type	D1	D2	B1	B2	H1	H2	H3	L1	L2	L3	L4
VABS-B6-PB-Q	G¼	M5	20	4.6	23.5	18.5	7	95	40	21	54.55

Ordering data						
Valve positions	Description	Compressed air supply connection	Weight [g]	CRC	Part No.	Type
1	Internal pilot air supply	Cartridge	22	2[1)]	**537518**	**VABS-B6-PB-Q-B**
1	External pilot air supply	Cartridge	22	2[1)]	**537519**	**VABS-B6-PB-Q**

1) Corrosion resistance class 2 according to Festo standard 940 070
Components subject to moderate corrosion stress. Externally visible parts with primarily decorative surface requirements which are in direct contact with a normal industrial environment or media such as coolants or lubricating agents.

Overview – Valve terminal VTUB

Valve terminal with electrical multi-pin plug connection

- 25-pin Sub-D multi-pin plug connection
  Code: SD

Valve terminals with electrical multi-pin plug connection are available in gradations from 2 to max. 10 valve positions.

Each valve position can either be equipped with a valve or a blanking plate.

A maximum of 20 solenoid coils can be actuated via the electrical multi-pin plug connection.

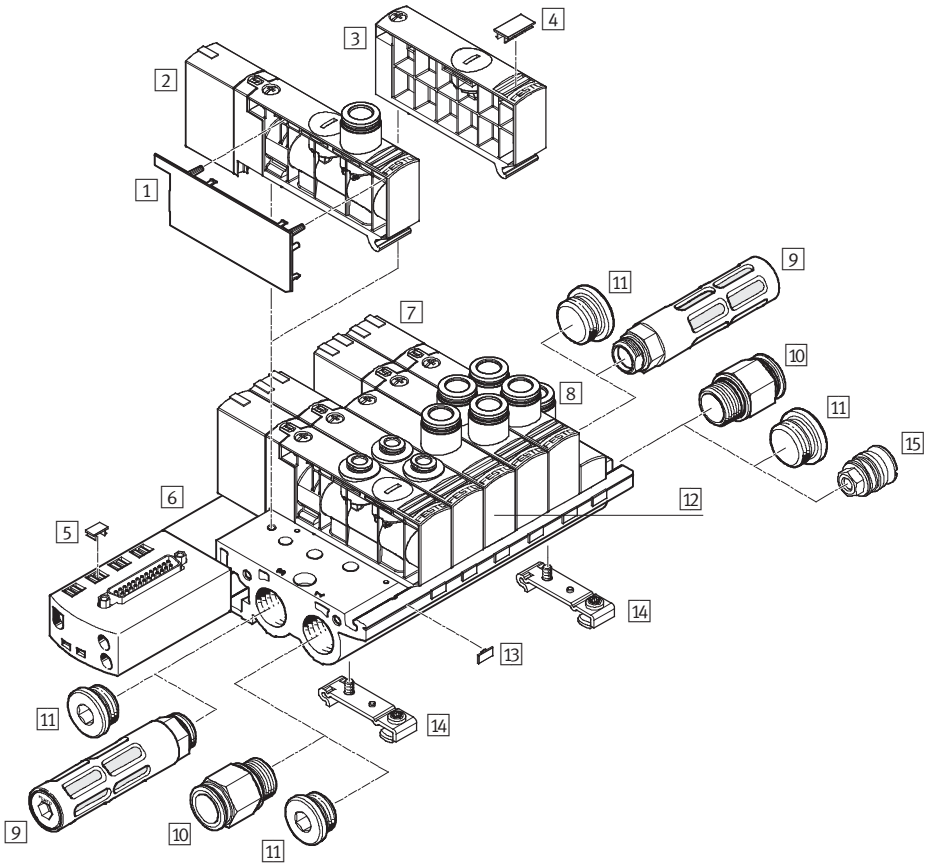

Note

Valve terminals are available for 4, 6, 8 and 10 valve positions in connection size ½ NPT.

Accessories			
		Brief description	➔ Page/Internet
1	Cover for valve housing VAMC	–	46
2	Single solenoid valve VUVB-...-M-–	–	35
3	Blanking plate VABB	Blanking plate VABB: for vacant position, with blanking plug	44
4	Inscription label IBS-9x17	For identifying the valves	49
5	Inscription label IBS-6x10	–	49
6	Manifold rail VABM-B6-E-N...-M1	With multi-pin plug connection, for connecting max. 16 valves	41
7	Double solenoid valve VUVB-...-B-–	–	35
8	Pressure zone supply module	For pilot air supply (included in the scope of delivery of the manifold rail VABM)	–
9	Silencer U	For fitting in exhaust ports	49
10	Push-in fitting QS	For connecting compressed air tubing with standard O.D.	48
11	Blanking plug B	–	49
12	Pressure zone supply module VABF	Pressure zone supply module VABF: with cartridge	43
13	Inscription label MH-BZ-80X	For identifying the manifold rail	49
14	H-rail mounting kit VAME	For mounting on the H-rail NRH-35-2000	49
15	Separator for pressure zones VABD	For mounting in the manifold rail	44

Valve terminals VTUB, NPT

Key features

Individual connection

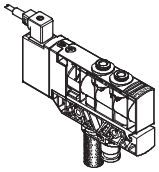

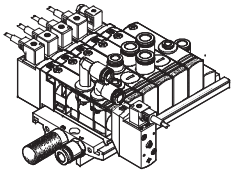

Connection is independent of the control technology used and is flexible thanks to pre-assembled cables.
There are two different valve types; in-line valves and semi in-line valves for manifold rails or individual sub-bases.
Between 2 ... 20 solenoid coils (divided between 2 ... 10 valve positions) can be selected with individual connection.

Valves can be used on individual sub-bases for actuators further away from the valve terminal.
With an individual electrical connection, the plug is connected directly to the valve. A number of plug sockets/plug sockets with cable can be selected for the valve terminal and for the individual sub-base:

- KMEB-1-...-LED with signal status display
- KMEB-1-230AC-... can be used up to 230 V AC
- MSSD-EB for self-assembly
- KMEB-2-24-... with signal status display
- Illuminating seal MEB-LD for signal status display

Multi-pin plug connection

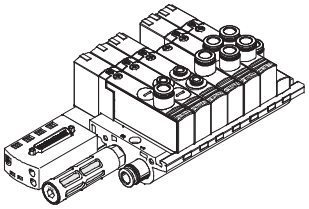

Control signals from the controller to the valve terminal are transmitted via a pre-assembled multi-core cable, which substantially reduces installation time.

This valve terminal can be equipped with 4 ... 10 valves.

Versions
- Sub-D connection

Double solenoid drive with multi-pin plug connection. The valve is equipped with an LED for signal status display.

Wide range of pneumatic components

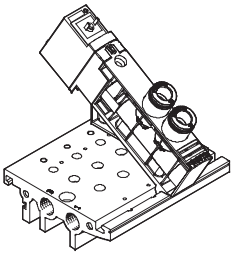

- Using the same basic valves for both the individual valves and the valve manifold permits fast and flexible conversion and multiple use of parts.
- Flexible construction thanks to assembled and tested units or individual components as modules for individual configurations.
- Flow rates from 200 ... 1,000 l/min depending on the respective application through the selection of appropriate QS connections.

Connection to the valve

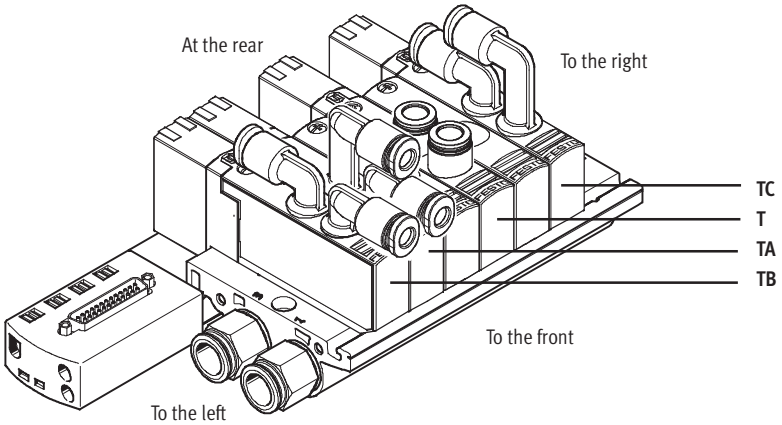

Connection positions on valve:
- T (on top, straight)
- TA (on top, angled outlet to the front)
- TB (on top, angled outlet to the front/rear)
- TC (on top, angled outlet to the rear)

Connection sizes for connection position T:
- Push-in connector 4 mm (code P4)
- Push-in connector 6 mm (code P6)
- Push-in connector 8 mm (code P8)
- Push-in connector 10 mm (code P10)

Connection sizes for connection position TB/TA/TC:
- Push-in connector 4 mm (code P4)
- Push-in connector 6 mm (code P6)
- Push-in connector 8 mm (code P8)

Instructions for using pressure zones

The valve terminal VTUB can be operated with 2 pressure zones, supplied either from the left or from the right.
Pressure zones are created by means of separators that can be used in the following ducts:

- Supply duct 1 (code TP)
  or
- Supply duct 1
  and exhaust duct 3 (code TS) or
- Exhaust duct 3 (code TR)

Duct separation

	Code	Description
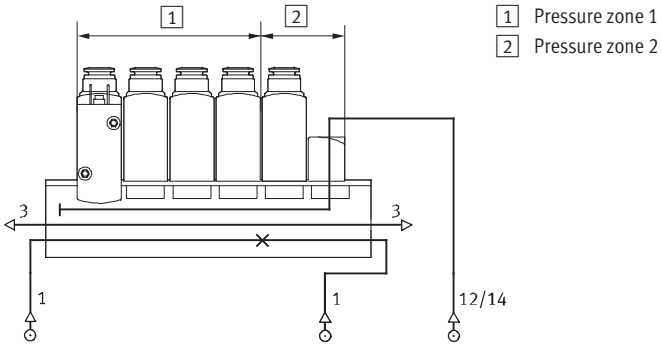	TP	Duct 1 closed
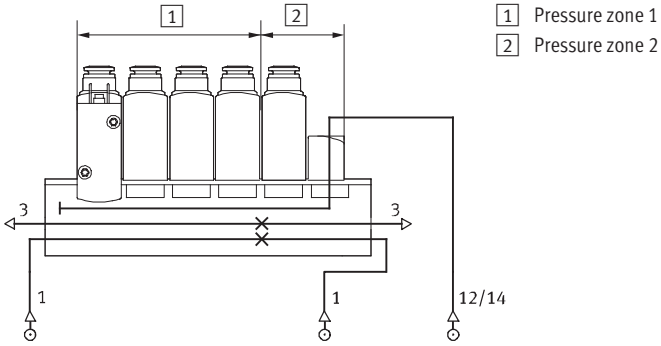	TS	Duct 1/3 closed
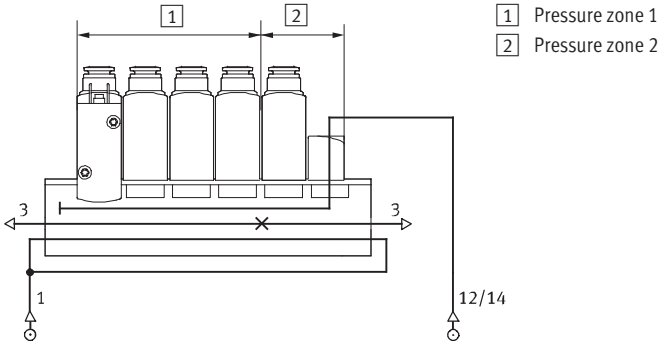	TR	Duct 3 closed

Separator VABD-B6

Note

The separator can also be fitted subsequently using a screwdriver/socket spanner.

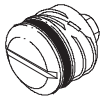

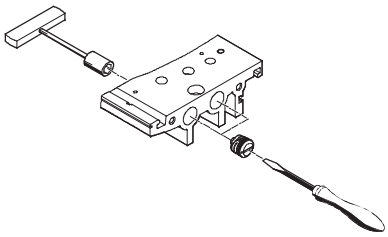

Identification system

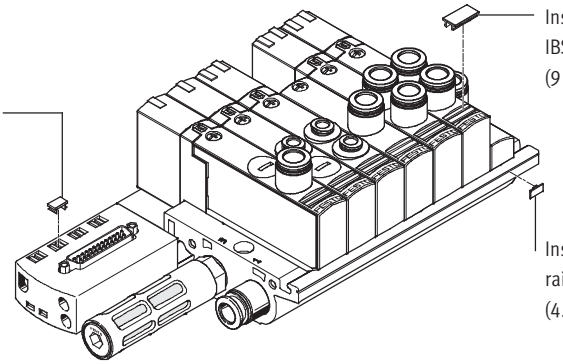

Inscription labels can be applied to the valves and manifold rails to identify them.

- Inscription labels for valve type IBS-9x17
  Part No. 161937
- Inscription labels for manifold rail type MH-BZ-80X
  Part No. 197259

Display and operation

Each solenoid coil can be allocated an LED which indicates its signal status. Suitable plug sockets with cable can be found on page 50. On the multi-pin variant the LED is integrated in the valve.

The manual override (MO) enables the valve to be activated without electronic control or power supply.

The valve is activated by pushing the manual override. The set switching status can be secured by rotating the manual override.

Note

A manually actuated valve (manual override) cannot be reset electrically. Conversely, an electrically actuated valve cannot be reset using the mechanical manual override.

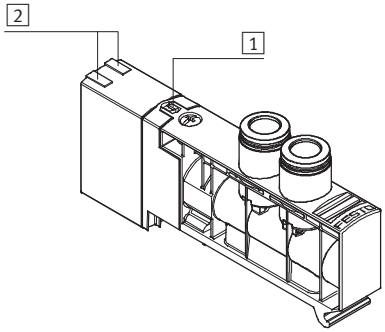

1 Optional manual override (pushing and detenting via turning using a screwdriver)

2 LED signal status display per solenoid coil

Manual override (MO)

MO with automatic return (non-detenting)

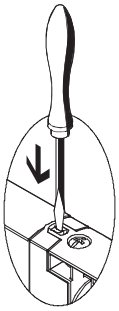

Press in the stem of the MO with a pin or screwdriver.
⇢ Valve is in switching position
Remove the pointed object or screwdriver.
Spring force pushes the stem of the MO back.
⇢ Valve returns to normal position.

MO with detent (turning with detent)[1)]

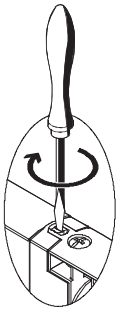

Press in the stem of the MO using a pin or screwdriver until the valve switches and then turn the stem clockwise by 90° until the stop is reached.
⇢ Valve remains in switching position.
Turn the stem anti-clockwise by 90° until the stop is reached and then remove the pin or screwdriver.
Spring force pushes the stem of the MO back.
⇢ Valve returns to normal position.

1) Not with double solenoid valve code J for electrical multi-pin plug connection (double solenoid valve)

Mounting – Valve terminal

Sturdy terminal mounting thanks to:

- Two through-holes for wall mounting
- Integrated attachment for H-rail mounting

Wall mounting

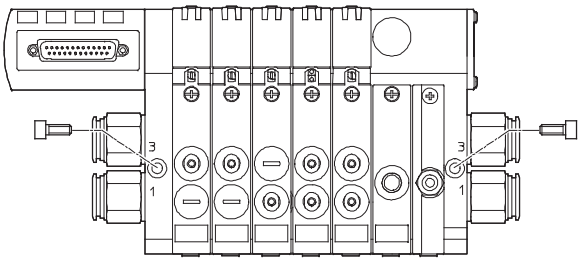

The VTUB valve terminal is screwed onto the mounting surface using two M5 screws.

H-rail mounting

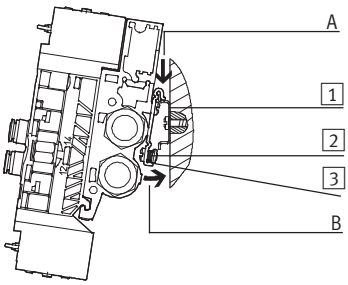

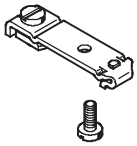

The valve terminal VTUB is hooked onto the H-rail (see arrow A).
The valve terminal VTUB is then swivelled on the H-rail and secured in place with the clamping component (see arrow B).

1 H-rail
2 Self-tapping M4x8 screw of the H-rail clamping unit
3 Clamping component of the H-rail clamping unit

For H-rail mounting of the valve terminal you will need the mounting kit VAME-B6-T. This permits mounting of the valve terminal on an H-rail to EN 60715.

Protective circuits for plug-in valves for multi-pin terminals

24 V DC version for single solenoid valve

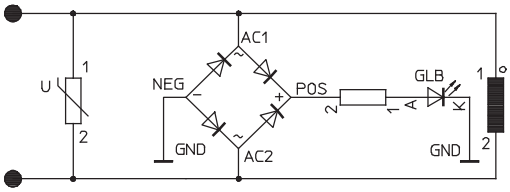

24 V DC version for double solenoid valve

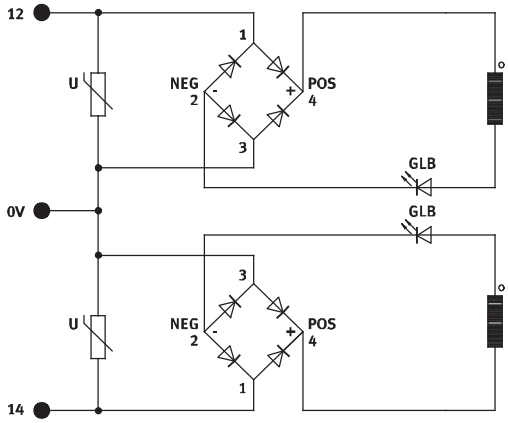

Pin allocation – Sub-D plug

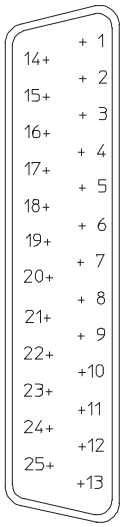

	Connecting cable, 25-wire			Connecting cable, 15-wire		
	Pin	Address/coil	Wire colour[1)]	Pin	Address/coil	Wire colour[1)]
	1	0	WH	1	0	WH
	2	1	BN	2	1	BN
	3	2	GN	3	2	GN
	4	3	YE	4	3	YE
	5	4	GY	5	4	GY
	6	5	PK	6	5	PK
	7	6	BU	7	6	BU
	8	7	RD	8	7	RD
	9	8	BK	9	8	BK
	10	9	VT	10	9	VT
	11	10	GY PK	11	10	GY PK
	12	11	RD BU	12	11	RD BU
	13	12	GN WH	13	–	–
	14	13	BN GN	14	–	–
	15	14	YE WH	15	–	–
	16	15	BN YE	16	–	–
	17	16	GY WH	17	–	–
	18	17	BN GY	18	–	–
	19	18	WH PK	19	–	–
	20	19	BN PK	20	–	–
	21	20	BU WH	21	–	–
	22	21	BN BU	22	–	–
	23	22	RD WH	23	–	WH GN
	24	23	BN RD	24	–	BN GN
	25	0 V	BK WH	25	0 V	WH YE

Note

The drawing shows the view on the pins of the Sub-D plug.

1) To IEC 757

Equipment

Operate system equipment with unlubricated compressed air if possible. Festo valves and cylinders are designed so that, if used as designated, they will not require additional lubrication and will still achieve a long service life.
The quality of compressed air downstream of the compressor must correspond to that of unlubricated compressed air. If possible, do not operate all of your system equipment with lubricated compressed air. The lubricators should, where possible, always be installed directly upstream of the actuator used.

Incorrect additional oil and too high an oil content in the compressed air reduce the service life of the valve terminal.
Use Festo special oil OFSW-32 or the alternatives listed in the Festo catalogue (as specified in DIN 51524 HLP32; basic oil viscosity 32 CST at 40 °C).

Bio-oils
When using bio-oils (oils which are based on synthetic or native ester, e.g. rapeseed oil methyl ester), the maximum residual oil content of 0.1 mg/m^3 must not be exceeded (see ISO 8573-1 Class 2).

Mineral oils
When using mineral oils (e.g. HLP oils to DIN 51524, parts 1 to 3) or similar oils based on poly-alpha-olefins (PAO), the maximum residual oil content of 5 mg/m^3 must not be exceeded (see ISO 8573-1 Class 4).
A higher residual oil content irrespective of the compressor oil cannot be permitted, as the basic lubricant would be flushed out over time.

Valve terminals VTUB, NPT

Type codes – Terminal valves

VUVB	–	S	–	M32C	–	A	Z	D	–	T14	–	1	T1	L

Valve series	
VUVB	Solenoid valve

Constructional design	
S	Semi in-line valve

Valve function	
M32C	3/2-way valve, normally closed
M32U	3/2-way valve, normally open
M42	4/2-way valve, single solenoid
B42	4/2-way valve, double solenoid

Reset method	
–	None (double solenoid)
A	Pneumatic reset

Pilot air supply	
–	Internal
Z	External

Manual override	
D	Non-detenting/detenting

Pneumatic connection	
T532	For tubing O.D. 5/32
T14	For tubing O.D. 1/4
T516	For tubing O.D. 5/16
T38	For tubing O.D. 3/8
QX	Without push-in connector

Operating voltage	
1	24 V DC

Electrical connection	
T1	Plug-in, connection for multi-pin plug

Signal status display	
L	LED

Valve terminals VTUB, NPT

Technical data – Terminal valves

Voltage
24 V DC

Pressure
–0.9 ... +8 bar

Temperature range
–5 ... +50 °C

General technical data				
Valve function		3/2-way, single solenoid	4/2-way, single solenoid	4/2-way, double solenoid
Design		Piston spool valve		
Sealing principle		Soft		
Actuation type		Electric		
Reset method		Pneumatic spring		–
Type of control		Piloted		
Pilot air supply		Internal or external		
Direction of flow		Non-reversible		
Exhaust function		No flow control		
Manual override		Non-detenting, detenting		Non-detenting
Type of mounting		Via through-hole		
Mounting position		Any		
Width	[mm]	20		
Nominal size	[mm]	7		
Pneumatic connections				
Supply port	1	½ NPT (sub-base)		
Exhaust port	3	½ NPT (sub-base)		
Working lines	2/4	5/32 NPT, ¼ NPT, 5/16 NPT, ⅜ NPT		
External pilot air connection	12/14	⅛ NPT		
Standard nominal flow rate qnN	[l/min]	200 (5/32 NPT) 500 (¼ NPT), 800 (5/16 NPT), 1,000 (⅜ NPT)		

Operating and environmental conditions		
Operating medium		Compressed air in accordance with ISO 8573-1:2010 [7:4:4]
Note on operating/pilot medium		Operation with lubricated medium possible (in which case lubricated operation will always be required)
Operating pressure	[bar]	–0.9 ... +8
Operating pressure for valve terminal with internal pilot air supply	[bar]	2 ... 8
Pilot pressure	[bar]	2 ... 8
Ambient temperature	[°C]	–5 ... +50
Temperature of medium	[°C]	–5 ... +50
Storage temperature[1)]	[°C]	–20 ... +40
Note on materials		RoHS-compliant

1) Long-term storage

Note

A filter must be installed upstream of valves operated in vacuum mode. This prevents any foreign matter in the intake air getting into the valve (e.g. when operating a suction cup).

Electrical data				
Valve function		3/2-way, single solenoid	4/2-way, single solenoid	4/2-way, double solenoid
Electrical connection		Socket for multi-pin plug		
Nominal operating voltage	[V DC]	24		
Permissible voltage fluctuations		±10%		
Electrical power consumption	[W]	1.5	1.5	3.3 (following a current reduction 0.1)
Protection class to EN 60529		IP65		

Valve switching times [ms]			
Valve function	3/2-way, single solenoid	4/2-way, single solenoid	4/2-way, double solenoid
On	20	20	–
Off	20	20	–
Changeover	–	–	20

Pilot pressure p2 as a function of operating pressure p1

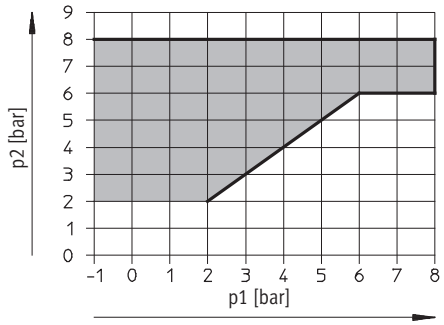

Materials – Valves

Sectional view

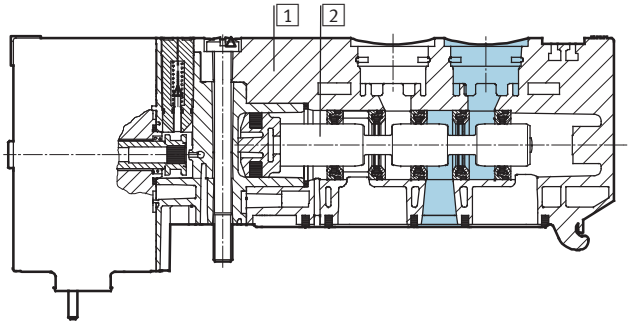

Single solenoid

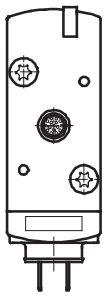

Double solenoid

1	Housing	Reinforced polyamide
2	Piston spool	Wrought aluminium alloy
–	Seals	Nitrile rubber, hydrogenated nitrile rubber, fluoro elastomer

Materials	
Manifold rail with multi-pin plug	Wrought aluminium alloy
Pressure zone supply module	Reinforced polyamide
Blanking plate for vacant position	Reinforced polyamide

Product weight	
Approx. weight [g]	
Manifold rail with multi-pin plug	
• 4 valve positions	700
• 6 valve positions	925
• 8 valve positions	1160
• 10 valve positions	1390
Pressure zone supply module	30
Valves	
• Single solenoid (code K, N, M)	150
• Double solenoid (code J)	220
Blanking plate for vacant position	25

Dimensions – 3/2-way and 4/2-way valve, single solenoid Download CAD Data ➔ **www.festo.com/us/cad**

For electrical multi-pin plug

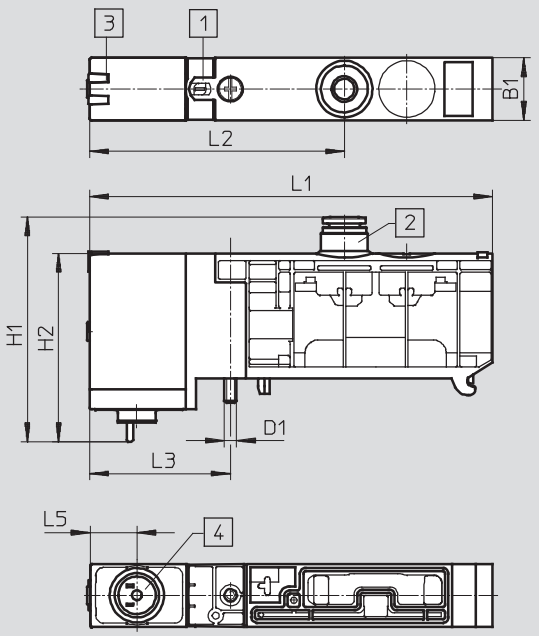

1 Manual override
2 Fitting QS
3 LED display
4 Plug for electrical interlinking

Type	B1	D1	H1	H2	L1	L2	L3	L5
VUVB-S-M32...-T14	20	M4	54	60.3	128.95	81.5	45	15
VUVB-S-M32...-T516			61					
VUVB-S-M32...-T38			65					

Dimensions – 4/2-way valve, double solenoid Download CAD Data ➔ **www.festo.com/us/cad**

For electrical multi-pin plug

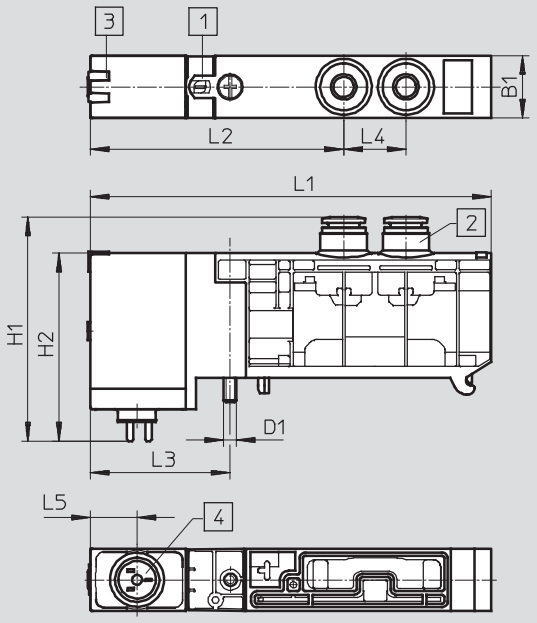

1 Manual override
2 Fitting QS
3 LED display
4 Plug for electrical interlinking

Type	B1	D1	H1	H2	L1	L2	L3	L4	L5
VUVB-S-B42...-T14	20	M4	54	60.3	128.95	81.5	45	20	15
VUVB-S-B42...-T516			61						
VUVB-S-B42...-T38			65						

Dimensions – Valve terminal Download CAD Data ➔ **www.festo.com/us/cad**

With electrical multi-pin plug

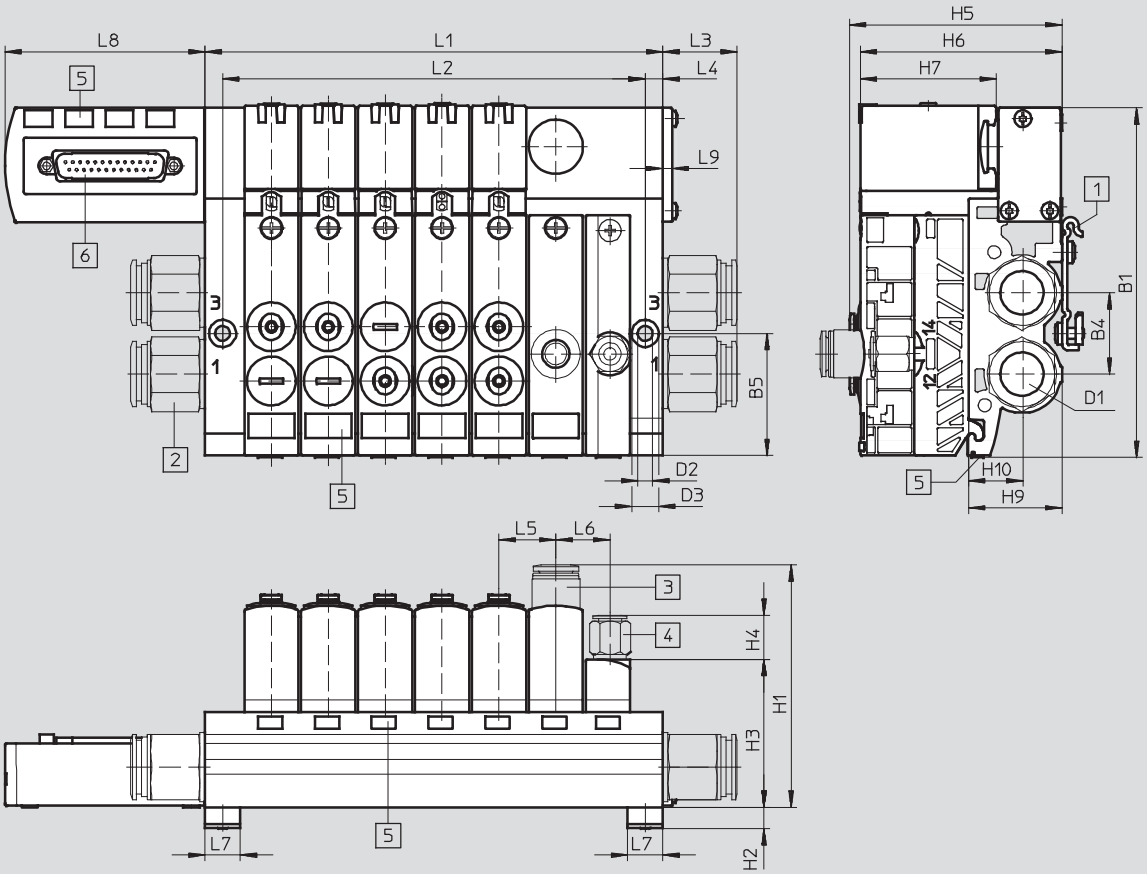

1 Attachment VAME-B6-T (optional) for mounting rail

2 Push-in fittings (optional)

3 Push-in fittings (optional, only with pressure zone supply module; blanking plate only with blanking plug)

4 Push-in fitting for external pilot air supply, with adapter for NPT

5 Inscription label (optional)

6 Selector plate for internal/external pilot air

7 Sub-D plug

Type	B1	B4	B5	D1	D2 -Ø- H13	D3 -Ø- H13	H1	H2	H3	H4	H6	H7	H9	H10	L1 ± 0.2	L2 ± 0.2	L3	L4	L5	L6	L7	L8	L9
VTUB-4-–	129.1	30	4	NPT ½	5.5	10	89.4	8	54.5	30.6	74.5	50.1	34.5	19.7	127	114	27.4	6.5	21	20	13	73.8	3.5
VTUB-6-–															169	156							
VTUB-8-–															211	198							
VTUB-10-–															253	240							

Type	H5
QSPK18-¼-U-100	78.9
QSPK18-5⁄16-U-100	85.7
QSPK18-⅜-U-100	89.5

Ordering data – Valves for valve terminal						
Circuit symbol	Code	Description	Voltage	Pneumatic connection	Part No.	Type
3/2-way valves						
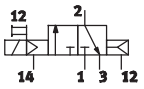	K	Normally closed, external pilot air supply, pneumatic spring return	24 V DC	QS-¼	**568611**	**VUVB-S-M32C-AZD-T14-1T1L**
				QS-5/16	**568612**	**VUVB-S-M32C-AZD-T516-1T1L**
				QS-⅜	**568613**	**VUVB-S-M32C-AZD-T38-1T1L**
				Without push-in connector	**574001**	**VUVB-S-M32C-AZD-QX-1T1L**
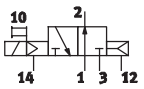	N	Normally open, external pilot air supply, pneumatic spring return	24 V DC	QS-¼	**568614**	**VUVB-S-M32U-AZD-T14-1T1L**
				QS-5/16	**568615**	**VUVB-S-M32U-AZD-T516-1T1L**
				QS-⅜	**568616**	**VUVB-S-M32U-AZD-T38-1T1L**
				Without push-in connector	**574002**	**VUVB-S-M32U-AZD-QX-1T1L**
4/2-way valves, single solenoid						
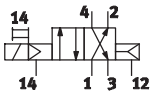	M	External pilot air supply, pneumatic spring return	24 V DC	QS-¼	**568617**	**VUVB-S-M42-AZD-T14-1T1L**
				QS-5/16	**568618**	**VUVB-S-M42-AZD-T516-1T1L**
				QS-⅜	**568619**	**VUVB-S-M42-AZD-T38-1T1L**
				Without push-in connector	**537640**	**VUVB-S-M42-AZD-QX-1T1L**
4/2-way valves, double solenoid						
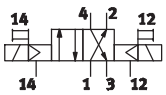	J	External pilot air supply	24 V DC	QS-¼	**568620**	**VUVB-S-B42-ZD-T14-1T1L**
				QS-5/16	**568621**	**VUVB-S-B42-ZD-T516-1T1L**
				QS-⅜	**568622**	**VUVB-S-B42-ZD-T38-1T1L**
				Without push-in connector	**537641**	**VUVB-S-B42-ZD-QX-1T1L**

Valve terminals VTUB, NPT

Technical data – Manifold rail

Manifold rail with electrical multi-pin plug
VABM-...-M1

Material:
Wrought aluminium alloy

Dimensions Download CAD Data ➔ **www.festo.com/us/cad**

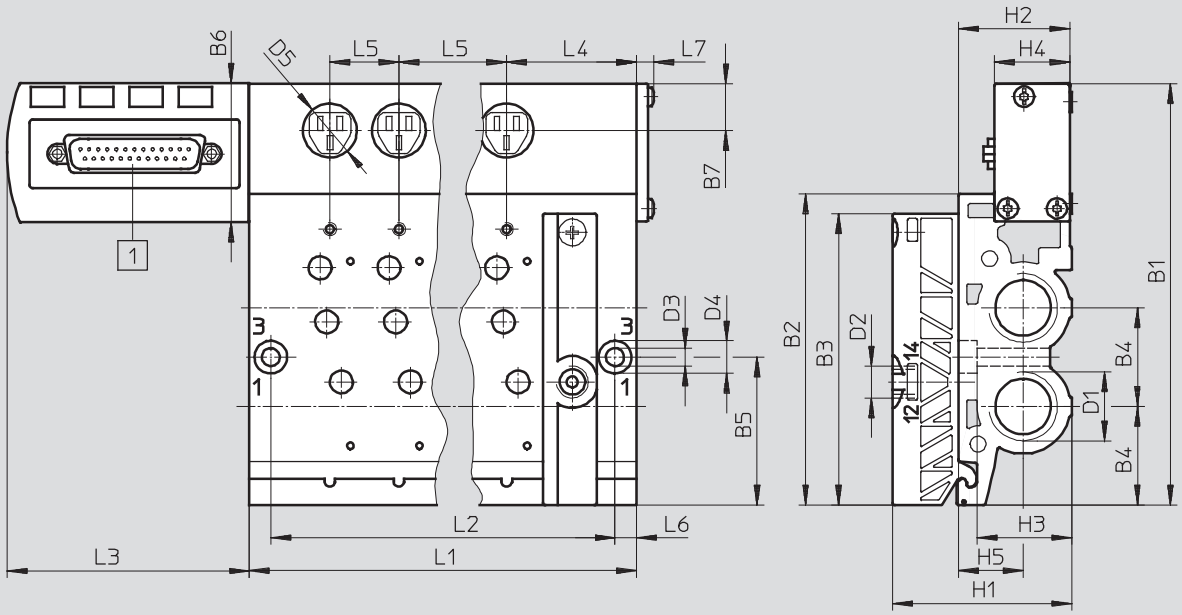

1 Sub-D plug

Note

The manifold rail is supplied with an adapter for NPT.

Type	B1	B2	B3	B4 ± 0.2	B5	B6	B7	D1	D2	D3 -Ø- H13	D4 -Ø- H13	D5 -Ø-	H1	H2	H3	H4	H5	H6 ±0.2
VABM-B6-E-N12-4-M1	128.3	94.7	88.7	30	45	42.2	14.3	½NPT	⅛NPT	5.5	10	16.4	68.7	54.5	34	28.8	23	19.7
VABM-B6-E-N12-6-M1																		
VABM-B6-E-N12-8-M1																		
VABM-B6-E-N12-10-M1																		

Type	L1	L2	L3	L4 ±0.1	L5 ±0.1	L6 ±0.1	L7
VABM-B6-E-N12-4-M1	127	114	73.8	39.5	21	6.5	5.4
VABM-B6-E-N12-6-M1	169	156					
VABM-B6-E-N12-8-M1	211	198					
VABM-B6-E-N12-10-M1	253	240					

Ordering data		
CRC	Part No.	Type
2[1)]	**568181**	**VABM-B6-E-N12-4-M1**
2[1)]	**568182**	**VABM-B6-E-N12-6-M1**
2[1)]	**568183**	**VABM-B6-E-N12-8-M1**
2[1)]	**568184**	**VABM-B6-E-N12-10-M1**

1) Corrosion resistance class 2 according to Festo standard 940 070
Components subject to medium corrosion stress. Externally visible parts with primarily decorative surface requirements which are in direct contact with a normal industrial environment or media such as coolants or lubricating agents.

Cover for valve housing VAMC

Material:
Polyamide

Ordering data		
CRC	Part No.	Type
2[1)]	**537512**	**VAMC-B6-C**

1) Corrosion resistance class 2 according to Festo standard 940 070
Components subject to moderate corrosion stress. Externally visible parts with primarily decorative surface requirements which are in direct contact with a normal industrial environment or media such as coolants or lubricating agents.

Pressure zone supply module VABF

Material:
Reinforced polyamide

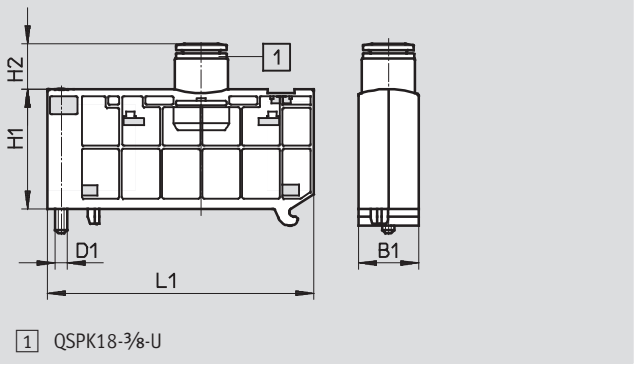

Type	D1	B1	H1	H2	L1
VABF-B6-...	M4	20	40	15	88.5

Ordering data				
		CRC	Part No.	Type
For individual electrical connection	With cartridge QSPK18-3/8-U	2[1)]	**568624**	**VABF-B6-P1A5-T38**
For multi-pin plug connection	With cartridge QSPK18-3/8-U and cover cap for multi-pin plug connection	2[1)]	**568623**	**VABF-B6-P1A9-T38**

1) Corrosion resistance class 2 according to Festo standard 940 070
Components subject to moderate corrosion stress. Externally visible parts with primarily decorative surface requirements which are in direct contact with a normal industrial environment or media such as coolants or lubricating agents.

Blanking plate VABB

Material:
Reinforced polyamide

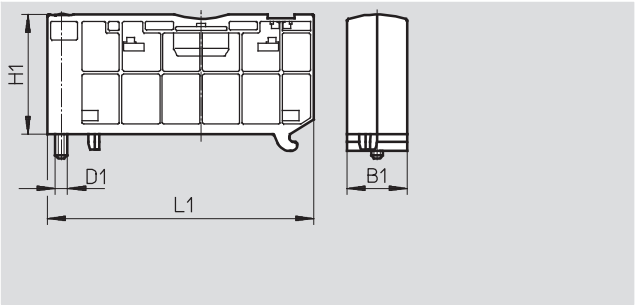

Type	B1	D1	H1	L1
VABB-B-6-E	20	M4	40	88.5

Ordering data				
		CRC	Part No.	Type
For individual electrical connection	–	2[1]	**537513**	**VABB-B6-E**
For multi-pin plug connection	With cover cap for multi-pin plug connection	2[1]	**537623**	**VABB-B6-ET**

1) Corrosion resistance class 2 according to Festo standard 940 070
Components subject to moderate corrosion stress. Externally visible parts with primarily decorative surface requirements which are in direct contact with a normal industrial environment or media such as coolants or lubricating agents.

Separator for pressure zones VABD

Material:
Steel

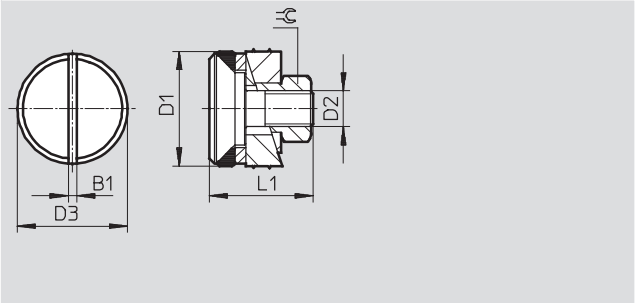

Type	B1	D1 ∅	D2 ∅	D3	L1	⬡
VABD-B6-14-P-C	1.6	11.7	M4	11.3	13.9	7
VABD-B6-12-P-C	1.4	19	M6	18.3	17.3	10

Ordering data			
Manifold rail	CRC	Part No.	Type
¼ NPT	2[1]	**537515**	**VABD-B6-14-P-C**
½ NPT	2[1]	**537516**	**VABD-B6-12-P-C**

1) Corrosion resistance class 2 according to Festo standard 940 070
Components subject to moderate corrosion stress. Externally visible parts with primarily decorative surface requirements which are in direct contact with a normal industrial environment or media such as coolants or lubricating agents.

H-rail mounting kit VAME

Material:
Steel

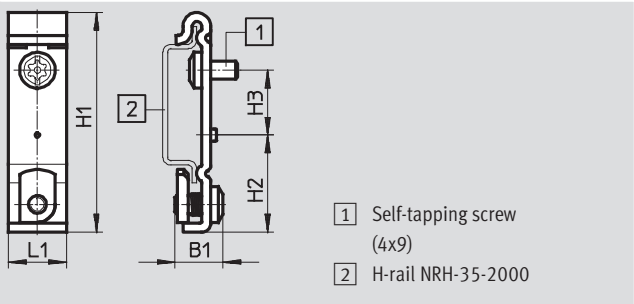

Type	B1	H1	H2	H3	L1
VAME-B6-T	10.7	49.1	21.7	14.5	13

Ordering data		
CRC	Part No.	Type
2[1)]	**537514**	**VAME-B6-T**

1) Corrosion resistance class 2 according to Festo standard 940 070
Components subject to moderate corrosion stress. Externally visible parts with primarily decorative surface requirements which are in direct contact with a normal industrial environment or media such as coolants or lubricating agents.

Ordering data					
	Code	Valve function	Pneumatic connection	Part No.	Type
Blanking plate for vacant position					
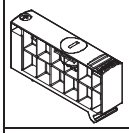	L	For individual electrical connection	–	**537513**	**VABB-B6-E**
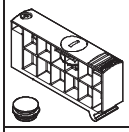	L	For multi-pin plug connection with cover cap for electrical multi-pin plug connection	–	**537623**	**VABB-B6-ET**
Pressure zone supply module					
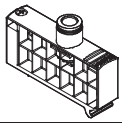	S	Additional supply for individual electrical connection	QS-3/8	**568623**	**VABF-B6-P1A5-Q38**
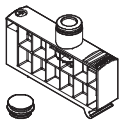	S	Additional supply for multi-pin plug connection with cover cap for electrical multi-pin plug connection	QS-3/8	**568624**	**VABF-B6-P1A9-Q38**
Cover plate for valve housing					
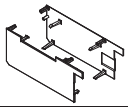	C	Valve design with cover	–	**537512**	**VAMC-B6-C**

Ordering data						
	Code	Description	Valve positions	Compressed air supply connection	Part No.	Type
Sub-base for individual valve						
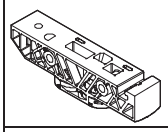	–	Internal pilot air supply	1	Cartridge	**537518**	**VABS-B6-PB-Q-B**
	–	External pilot air supply	1	Cartridge	**537519**	**VABS-B6-PB-Q**
Adapter for individual sub-base						
	–	For thread ¼ NPT	1	¼ NPT	**9396**	**AD-G¼-¼NPT-I**
Manifold rail for individual electrical connection						
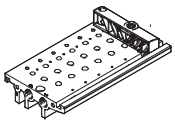	–		2	¼ NPT	**568185**	**VABM-B6-E-N14-2**
			4		**568186**	**VABM-B6-E-N14-4**
			6		**568187**	**VABM-B6-E-N14-6**
			8		**568188**	**VABM-B6-E-N14-8**
			10		**568189**	**VABM-B6-E-N14-10**
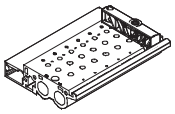	–		2	½ NPT	**570725**	**VABM-B6-E-N12-2**
			4		**570726**	**VABM-B6-E-N12-4**
			6		**570727**	**VABM-B6-E-N12-6**
			8		**570728**	**VABM-B6-E-N12-8**
			10		**570729**	**VABM-B6-E-N12-10**
Manifold rail for valve terminal with multi-pin plug connection						
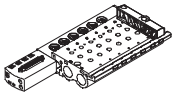	–		4	½ NPT	**568181**	**VABM-B6-E-N12-4-M1**
			6		**568182**	**VABM-B6-E-N12-6-M1**
			8		**568183**	**VABM-B6-E-N12-8-M1**
			10		**568184**	**VABM-B6-E-N12-10-M1**
Separator						
	TP, TS, TR	For duct separation	–	¼ NPT	**537515**	**VABD-B6-14-P-C**
			–	½ NPT	**537516**	**VABD-B6-12-P-C**

Ordering data						
	Code	Description	Tubing O.D.	Packaging unit	Part No.	Type
Cartridge with push-in connector						
	–	Straight	5/32	10 pieces	**132171**	**QSPK18-5/32-U**
	–		1/4	10 pieces	**132172**	**QSPK18-1/4-U**
	–		5/16	10 pieces	**132173**	**QSPK18-5/16-U**
	–		3/8	10 pieces	**132174**	**QSPK18-3/8-U**
	–	L-shape	5/32	10 pieces	**132175**	**QSPLK18-5/32-U**
	–		1/4	10 pieces	**132176**	**QSPLK18-1/4-U**
	–		5/16	10 pieces	**132177**	**QSPLK18-5/16-U**
	–	Extra-long L-shape	5/32	10 pieces	**132178**	**QSPLLK18-5/32-U**
	–		1/4	10 pieces	**132179**	**QSPLLK18-1/4-U**
	–		5/16	10 pieces	**132180**	**QSPLLK18-5/16-U**
Push-in fitting						Technical data ➔ Internet: quick star
	–	Connection 1/4 NPT	3/8	1 piece	**533278**	**QB-1/4-3/8-U**
	–		1/2	1 piece	**567771**	**QB-1/4-1/2-U**
	–	Connection 1/2 NPT	3/8	1 piece	**533283**	**QB-1/2-3/8-U**
	–		1/2	1 piece	**533284**	**QB-1/2-1/2-U**
	–	Connection 1/8 NPT	1/4	1 piece	**533273**	**QB-1/8-1/4-U**

Ordering data					
	Code	Description	Packaging unit	Part No.	Type
Blanking plug					
	–	Connection ∅ 18 mm	10 pieces	**537533**	**QSPC18**
	–	For thread ¼ NPT	10 pieces	**174165**	**B-¼-NPT**
	–	For thread ½ NPT	10 pieces	**31785**	**B-½-NPT**
Adapter					
	–	For thread ⅛ NPT	1 piece	**9395**	**AD-G⅛-⅛NPT-I**
Silencer					Technical data ➔ Internet: u
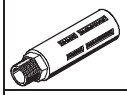	–	For thread ¼ NPT	1 piece	**12639**	**U-¼-B-NPT**
	–	For thread ½ NPT	1 piece	**12741**	**U-½-B-NPT**
Inscription label					
	–	Scope of delivery 24 labels in frame		**161937**	**IBS-9x17**
	–	Scope of delivery 80 labels in frame		**197259**	**MH-BZ-80X**
	–	Scope of delivery 64 labels in frame		**18576**	**IBS-6x10**
H-rail mounting kit					
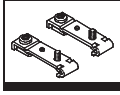	H	Attachment of the manifold rails to H-rails to EN 60715-TH35	1 piece	**537514**	**VAME-B6-T**

Ordering data						
	Code	Description	Voltage [V]	Cable length [m]	Part No.	Type
Plug socket						Technical data ➔ Internet: mssd-eb
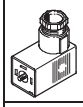	–	With screw terminals, for self-assembly	Up to 250 AC	–	**151687**	**MSSD-EB**
	C		Up to 250 AC	–	**539712**	**MSSD-EB-M12**
	–	With insulation displacement connection, for self-assembly	Up to 250 AC	–	**192745**	**MSSD-EB-S-M14**
Plug socket with cable for individual electrical connection						Technical data ➔ Internet: kmeb
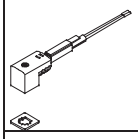	–	Switching status display via LED Polyvinyl chloride	24 DC	2.5	**151688**	**KMEB-1-24-2,5-LED**
			24 DC	5	**151689**	**KMEB-1-24-5-LED**
		Polyvinyl chloride	Up to 240 AC	2.5	**151690**	**KMEB-1-230AC-2,5**
			Up to 240 AC	5	**151691**	**KMEB-1-230AC-5**
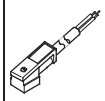	C1	Switching status display via LED, polyurethane	24 DC	2.5	**174844**	**KMEB-2-24-2,5-LED**
	C2	Switching status display via LED, polyurethane	24 DC	5	**174845**	**KMEB-2-24-5-LED**
	C1	Polyurethane	Up to 230 AC	2.5	**174846**	**KMEB-2-230AC-2,5**
	C2		Up to 230 AC	5	**174847**	**KMEB-2-230AC-5**
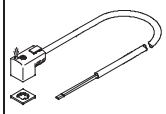	–	Switching status display via LED Polyvinyl chloride	24 DC	2.5	**547268**	**KMEB-3-24-2,5-LED**
			24 DC	5	**547269**	**KMEB-3-24-5-LED**
		Polyvinyl chloride	24 DC	2.5	**547270**	**KMEB-3-24-2,5**
			24 DC	5	**547271**	**KMEB-3-24-5**
Connecting cable for multi-pin plug to IP40						
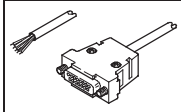	–	Sub-D, 25-pin, up to 20 coils Polyvinyl chloride	24 DC	2.5	**530046**	**KMP6-25P-20-2,5**
	–		24 DC	5	**530047**	**KMP6-25P-20-5**
	–		24 DC	10	**530048**	**KMP6-25P-20-10**
	–	Sub-D, 25-pin, up to 12 coils Polyvinyl chloride	24 DC	2.5	**530049**	**KMP6-25P-12-2,5**
	–		24 DC	5	**530050**	**KMP6-25P-12-5**
	–		24 DC	10	**530051**	**KMP6-25P-12-10**
Connecting cable for multi-pin plug to IP65						
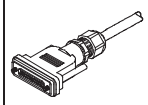	M1	Sub-D, 25-pin, up to 12 coils Polyvinyl chloride	24 DC	2.5	**538222**	**NEBV-S1G25-K-2,5-N-LE15**
	M2		24 DC	5	**538223**	**NEBV-S1G25-K-5-N-LE15**
	M3		24 DC	10	**538224**	**NEBV-S1G25-K-10-N-LE15**
	M1	Sub-D, 25-pin, up to 24 coils Polyvinyl chloride	24 DC	2.5	**538225**	**NEBV-S1G25-K-2,5-N-LE25**
	M2		24 DC	5	**538226**	**NEBV-S1G25-K-5-N-LE25**
	M3		24 DC	10	**538227**	**NEBV-S1G25-K-10-N-LE25**
Illuminating seal						
	–	For indicating the signal status	12 … 24 DC	–	**151717**	**MEB-LD-12-24DC**
	–		Up to 230 AC	–	**151718**	**MEB-LD-230AC**

Product Range and Company Overview

A Complete Suite of Automation Services

Our experienced engineers provide complete support at every stage of your development process, including: conceptualization, analysis, engineering, design, assembly, documentation, validation, and production.

Custom Automation Components
Complete custom engineered solutions

Custom Control Cabinets
Comprehensive engineering support and on-site services

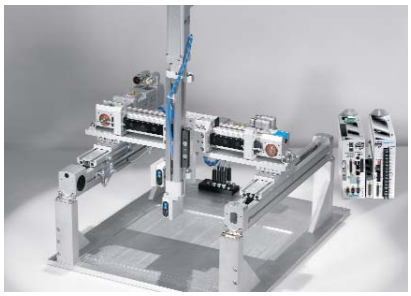

Complete Systems
Shipment, stocking and storage services

The Broadest Range of Automation Components

With a comprehensive line of more than 30,000 automation components, Festo is capable of solving the most complex automation requirements.

Electromechanical
Electromechanical actuators, motors, controllers & drives

Pneumatics
Pneumatic linear and rotary actuators, valves, and air supply

PLCs and I/O Devices
PLC's, operator interfaces, sensors and I/O devices

Supporting Advanced Automation... As No One Else Can!
Festo is a leading global manufacturer of pneumatic and electromechanical systems, components and controls for industrial automation, with more than 12,000 employees in 56 national headquarters serving more than 180 countries. For more than 80 years, Festo has continuously elevated the state of manufacturing with innovations and optimized motion control solutions that deliver higher performing, more profitable automated manufacturing and processing equipment. Our dedication to the advancement of automation extends beyond technology to the education and development of current and future automation and robotics designers with simulation tools, teaching programs, and on-site services.

Quality Assurance, ISO 9001 and ISO 14001 Certifications

Festo Corporation is committed to supply all Festo products and services that will meet or exceed our customers' requirements in product quality, delivery, customer service and satisfaction.

To meet this commitment, we strive to ensure a consistent, integrated, and systematic approach to management that will meet or exceed the requirements of the ISO 9001 standard for Quality Management and the ISO 14001 standard for Environmental Management.

9001: CERTCC5-16248-2006-AQ-ESN-TGA
ISO 9001
ISO 14001
DNV
Certified Company
14001: CERTCC5-16248A-2006-AQ-ESN-TGA

FSC
Printed on recycled paper at New Horizon Graphic, Inc., FSC certified as an environmentally friendly printing plant.

Festo North America

Festo Regional Contact Center

5300 Explorer Drive
Mississauga, Ontario L4W 5G4
Canada

USA Customers:

For ordering assistance,
Call: 1.800.99.FESTO (1.800.993.3786)
Fax: 1.800.96.FESTO (1.800.963.3786)
Email: customer.service@us.festo.com

For technical support,
Call: 1.866.GO.FESTO (1.866.463.3786)
Fax: 1.800.96.FESTO (1.800.963.3786)
Email: product.support@us.festo.com

Canadian Customers:

Call: 1.877.GO.FESTO (1.877.463.3786)
Fax: 1.877.FX.FESTO (1.877.393.3786)
Email: festo.canada@ca.festo.com

USA Headquarters

Festo Corporation
395 Moreland Road
P.O. Box 18023
Hauppauge, NY 11788, USA
www.festo.com/us

USA Sales Offices

Appleton
North 922 Tower View Drive, Suite N
Greenville, WI 54942, USA

Boston
120 Presidential Way, Suite 330
Woburn, MA 01801, USA

Chicago
1441 East Business Center Drive
Mt. Prospect, IL 60056, USA

Dallas
1825 Lakeway Drive, Suite 600
Lewisville, TX 75057, USA

Detroit – Automotive Engineering Center
2601 Cambridge Court, Suite 320
Auburn Hills, MI 48326, USA

New York
395 Moreland Road
Hauppauge, NY 11788, USA

Silicon Valley
4935 Southfront Road, Suite F
Livermore, CA 94550, USA

United States

USA Headquarters, East: Festo Corp., 395 Moreland Road, Hauppauge, NY 11788
Phone: 1.631.435.0800; Fax: 1.631.435.8026;
Email: info@festo-usa.com **www.festo.com/us**

Canada

Headquarters: Festo Inc., 5300 Explorer Drive, Mississauga, Ontario L4W 5G4
Phone: 1.905.624.9000; Fax: 1.905.624.9001;
Email: festo.canada@ca.festo.com **www.festo.ca**

Mexico

Headquarters: Festo Pneumatic, S.A., Av. Ceylán 3, Col. Tequesquinahuac,
54020 Tlalnepantla, Edo. de México
Phone: 011 52 [55] 53 21 66 00; Fax: 011 52 [55] 53 21 66 65;
Email: festo.mexico@mx.festo.com **www.festo.com/mx**

Central USA
Festo Corporation
1441 East Business
Center Drive
Mt. Prospect, IL 60056, USA
Phone: 1.847.759.2600
Fax: 1.847.768.9480

Western USA
Festo Corporation
4935 Southfront Road,
Suite F
Livermore, CA 94550, USA
Phone: 1.925.371.1099
Fax: 1.925.245.1286

Festo Worldwide

Argentina Australia Austria Belarus Belgium Brazil Bulgaria Canada Chile China Colombia Croatia Czech Republic Denmark Estonia Finland France Germany Great Britain Greece Hong Kong Hungary India Indonesia Iran Ireland Israel Italy Japan Latvia Lithuania Malaysia Mexico Netherlands New Zealand Norway Peru Philippines Poland Romania Russia Serbia Singapore Slovakia Slovenia South Africa South Korea Spain Sweden Switzerland Taiwan Thailand Turkey Ukraine United States Venezuela

www.festo.com