Adsorption dryers PDAD

Adsorption dryers PDAD

Key features

FESTO

Description	Areas of application	Features/Advantages/Benefits	
Cold-regenerating adsorption dryer with defined pressure dew point and high flow rate for decentralised compressed air drying The utilisation of adsorption dryers is always required when pressure dew points of less than –20 °C need to be achieved reliably.	• Sensors • Semiconductor manufacturing • Manufacture of foils and packaging • Transportation of powder • Dental technology • Painting systems • Food industry • Pharmaceuticals	• The solution for dry and clean compressed air • Greater service life of pneumatic components • Pressure dew point –40 °C or –70 °C (with reduced flow rate) • Additional filtering of oil and particulate • Produced for decentralised compressed air drying	• High flow rate performance up to 2,400 l/min • Selectable voltage for electrical connection • Low purge air consumption and noise levels • Complies with air purity class at the output up to 2:1:2 in accordance with ISO 8573-1:2010 at a pressure dew point of –70 °C

Lower costs	Reduced maintenance costs	Flexible installation	User-friendly
Controlled, decentralised drying directly at the consuming device is advantageous because only the actually required amount of dry air is prepared. This reduces energy costs, and prevents corrosion, thus extending the service life of components.	Complete cartridges containing drying agent allow fast and easy replacement of the drying agent. Pre-filled cartridges guarantee fast and clean cartridge replacement. Maintenance costs are reduced because the integrated secondary filter (grade of filtration 1 µm) in every cartridge retains the abraded particles of the drying agent.	Space-optimised and flexible mounting thanks to the integrated secondary filter.	A clear operating display shows drying cycles and service functions.

Function		Notes	
The air stream is passed through the supplied prefilter, a micro filter with grade of filtration 0.01 µm. It protects the drying agents from contaminating dirt and oil particles (oil significantly reduces the service life of the drying agent). The adsorption dryer consists of two cartridges (four in the case of the PDAD-100) filled with drying agent. Moist compressed air flows	through the two cartridges alternately, and the water from the air accumulates on the surface of the drying agent. After a predetermined period of time, the flow of air is switched to the other cartridge and a portion of the dried air (purge air) is used to regenerate the drying agent in the first cartridge. The purge air escapes into the atmosphere.	The drying agent has a service life of approx. 12,000 operating hours. The average purge air requirement under nominal conditions (7 bar/25 °C) is approx. 17%. If the dryer is used under different operating conditions, the input air/purge air ratio may change as the purge air	consumption is only dependent on the input air and not on the used output flow rate. The volume of purge air must therefore be adapted to different supply pressures by replacing the air blast nozzle (air nozzle set with 3 air blast nozzles ADNA ➔ 9).

Adsorption dryers PDAD

Peripherals overview and type codes

Peripherals overview

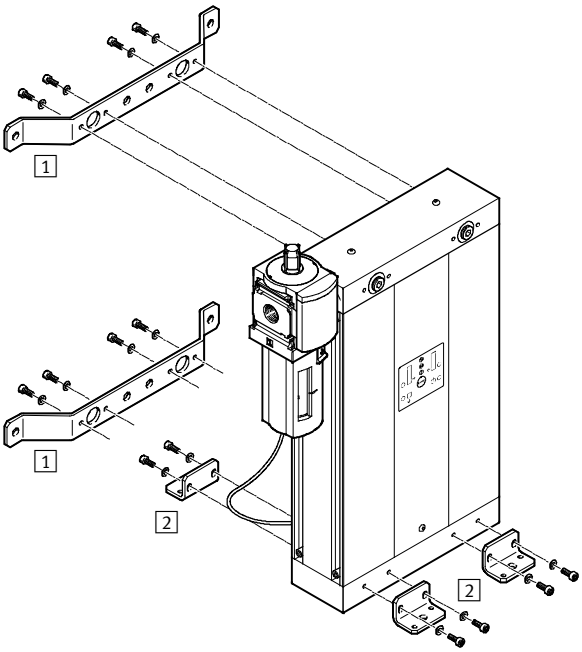

Mounting attachments and accessories		➔ Page/Internet
1	Wall mounting kit ABMW	8
2	Foot mounting ABMF	8
–	Service kit PDAD-SP	9
–	Air nozzle ADNA	9

Type codes

PDAD	–	22	–	G3/8

Basic function	
PDAD	Adsorption dryer

Output flow rate under nominal conditions (supply pressure 7 bar, pressure dew point –40 °C, temperate of medium at input 25 °C)	
09	87 l/min
13	126 l/min
22	212 l/min
51	506 l/min
73	729 l/min
100	994 l/min

Pneumatic connection	
PDAD-09/13/22/51	
G3/8	Thread G3/8
PDAD-73/100	
G1/2	Thread G1/2

Adsorption dryers PDAD

Technical data

Function

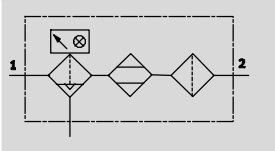

Flow rate
40 … 2,400 l/min

Temperature range
+2 … +50 °C

Supply pressure
4 … 16 bar

Pressure dew point
–40 °C or –70 °C

General technical data							
Type		PDAD-09	PDAD-13	PDAD-22	PDAD-51	PDAD-73	PDAD-100
Pneumatic connection 1, 2		G3/8				G1/2	
Design		Cold regenerating adsorption dryer					
Type of mounting		With accessories					
Mounting position		Upright					
		Horizontal					
Pressure dew point	[°C]	–40					
		–70 (with reduced flow rate)					
Air purity class at the output		Compressed air in accordance with ISO 8573-1:2010 [2:2:2] (at a pressure dew point of –40 °C)					
		Compressed air in accordance with ISO 8573-1:2010 [2:1:2] (at a pressure dew point of –70 °C)					
Electrical data							
Electrical connection		2 connections (12 … 24 V DC or 110 … 240 V AC) for power supply sockets					
Power consumption	DC	Approx. 9.6 W (24 V/0.4 A typ.)					
	AC	Approx. 16 VA (230 V/0.07 A typ.)					
Protection class		IP65 (to DIN 40050)					
Materials							
Body		Wrought aluminium alloy					

Operating and environmental conditions							
Type		PDAD-09	PDAD-13	PDAD-22	PDAD-51	PDAD-73	PDAD-100
Supply pressure	[bar]	4 … 16					
Operating medium		Compressed air in accordance with ISO 8573-1:2010 [6:4:4]					
Note on operating/pilot medium		Operation with lubricated medium not possible					
Ambient temperature	[°C]	+5 … +50					
Temperature of medium	[°C]	+2 … +50					
Storage temperature	[°C]	–20 … +60					
Corrosion resistance class CRC[1)]		2					
CE mark (see declaration of conformity)		In accordance with EU EMC directive					
		In accordance with EU Low Voltage Directive					
		In accordance with EU Pressure Equipment Directive					

1) Corrosion resistance class 2 to Festo standard 940 070
Components subject to moderate corrosion stress. Externally visible parts with primarily decorative surface requirements which are in direct contact with a normal industrial environment or media such as coolants or lubricating agents.

Weights [g]						
Type	PDAD-09	PDAD-13	PDAD-22	PDAD-51	PDAD-73	PDAD-100
Adsorption dryer	13,000	14,000	16,500	24,000	31,000	47,000

Adsorption dryers PDAD

Technical data

FESTO

Note

Please do not use the average consumption values (flow rate) as your guide when setting up the dryer, instead use

a) the inlet pressure of the dryer,
b) the peak value for the flow rate and
c) the maximum permissible supply temperature.

The adsorption dryers are designed for continuous operation.
Intensely pulsed or intermittent operation leads to the premature aging of and/or damage to the drying agent and thus to the failure of the dryer.
If the adsorption dryer PDAD is nonetheless to be used in pulsed or intermittent mode the use of buffer reservoirs, through which the compressed air flows, is recommended for smoothing the pressure peaks. Depending on the application these can be mounted upstream and/or downstream of the dryer. The volume of a reservoir should be approx. 50% of the flow rate for one minute.

Note

On delivery the adsorption dryer PDAD is configured with an air nozzle for a supply pressure of 7 ... 9 bar.
If a different supply pressure is used, the air nozzle must be replaced. The set containing the other air nozzles must be ordered separately ➔ 9.

Nominal flow rate q_n [l/min] for pressure dew point –40 °C (temperature of medium at inlet 25 °C saturated)													
q_n	Supply pressure p [bar]												
	4	5	6	7	8	9	10	11	12	13	14	15	16
PDAD-09													
Inlet	73.6	88.3	103.1	117.8	132.5	147.2	162.0	176.7	191.4	206.1	220.9	235.6	250.3
	Air nozzle no. 9			Air nozzle no. 7			Air nozzle no. 6			Air nozzle no. 5			
Purge air	33.0	30.0	34.0	31.0	36.0	40.0	31.0	34.0	37.0	30.0	32.0	34.0	36.0
Outlet	40.6	58.3	69.1	86.8	96.5	107.2	131.0	142.7	154.4	176.1	188.9	201.6	214.3
PDAD-13													
Inlet	109.6	132.5	153.7	176.7	197.9	220.9	242.1	265.1	286.3	309.2	330.4	353.4	374.6
	Air nozzle no. 10			Air nozzle no. 8			Air nozzle no. 7			Air nozzle no. 6			
Purge air	42.0	52.0	61.0	51.0	54.0	68.0	45.0	49.0	54.0	62.0	67.0	71.0	76.0
Outlet	67.6	80.5	92.7	125.7	143.9	152.9	197.1	216.1	232.3	247.2	263.4	282.4	298.6
PDAD-22													
Inlet	186.2	225.3	261.3	300.4	336.4	375.5	411.5	450.6	486.6	525.7	561.7	600.8	636.8
	Air nozzle no. 14			Air nozzle no. 12			Air nozzle no. 10			Air nozzle no. 9			
Purge air	76.0	89.0	106.0	88.0	97.0	107.0	86.0	96.0	106.0	89.0	96.0	103.0	111.0
Outlet	110.2	136.3	155.3	212.4	239.4	268.5	325.5	354.6	380.6	436.7	465.7	497.8	525.8
PDAD-51													
Inlet	416.3	503.6	584.2	671.5	752.0	839.3	919.9	1,007.2	1,087.8	1,175.1	1,255.6	1,342.9	1,423.5
	Air nozzle no. 23			Air nozzle no. 17			Air nozzle no. 14			Air nozzle no. 12			
Purge air	166.0	204.0	230.0	165.5	194.5	216.0	165.0	182.5	198.5	160.5	176.0	182.5	201.5
Outlet	250.3	299.6	354.2	506.0	557.5	623.3	754.9	824.7	889.3	1,014.6	1,079.6	1,160.4	1,222.0
PDAD-73													
Inlet	613.5	742.1	860.9	989.5	1,108.3	1,236.9	1,355.7	1,484.3	1,603.0	1,731.7	1,850.4	1,979.1	2,097.8
	Air nozzle no. 29			Air nozzle no. 24			Air nozzle no. 17			Air nozzle no. 15			
Purge air	233.0	270.0	311.0	261.0	302.0	339.0	248.0	272.0	295.0	243.0	261.0	282.0	301.0
Outlet	380.5	472.1	549.9	728.5	806.3	897.9	1,107.7	1,212.3	1,308.0	1,488.7	1,589.4	1,697.1	1,796.8
PDAD-100													
Inlet	821.7	993.9	1,153.0	1,325.3	1,484.3	1,656.6	1,815.6	1,987.9	2,146.9	2,319.2	2,478.2	2,650.5	2,809.6
	Air nozzle no. 23			Air nozzle no. 17			Air nozzle no. 14			Air nozzle no. 12			
Purge air	332.0	408.0	460.0	331.0	389.0	432.0	330.0	365.0	397.0	321.0	352.0	365.0	403.0
Outlet	489.7	585.9	693.0	994.3	1,095.3	1,224.6	1,485.6	1,622.9	1,749.9	1,998.2	2,126.2	2,285.5	2,406.6

Adsorption dryers PDAD

Technical data

Nominal flow rate q_n [l/min] for pressure dew point -70 °C (temperature of medium at inlet 25 °C saturated)													
q_n	Supply pressure [bar]												
	4	5	6	7	8	9	10	11	12	13	14	15	16
PDAD-09													
Inlet	51.5	61.8	72.1	82.5	92.8	103.1	113.4	123.7	134.0	144.3	154.6	164.9	175.2
	Air nozzle no. 9			Air nozzle no. 7			Air nozzle no. 6			Air nozzle no. 5			
Purge air	33.0	30.0	34.0	31.0	36.0	40.0	31.0	34.0	37.0	30.0	32.0	34.0	36.0
Outlet	18.5	31.8	38.1	51.5	56.8	63.1	82.4	89.7	97.0	114.3	122.6	130.9	139.2
PDAD-13													
Inlet	77.3	92.8	108.2	123.7	139.2	154.6	170.1	185.5	201.0	216.5	231.9	247.4	262.8
	Air nozzle no. 10			Air nozzle no. 8			Air nozzle no. 7			Air nozzle no. 6			
Purge air	42.0	52.0	61.0	51.0	54.0	68.0	45.0	49.0	54.0	62.0	67.0	71.0	76.0
Outlet	35.3	40.8	47.2	72.7	85.2	86.6	125.1	136.5	147.0	154.5	164.9	176.4	186.8
PDAD-22													
Inlet	131.4	157.7	184.0	210.3	236.6	262.8	289.1	315.4	341.7	368.0	394.3	420.6	446.8
	Air nozzle no. 14			Air nozzle no. 12			Air nozzle no. 10			Air nozzle no. 9			
Purge air	76.0	89.0	106.0	88.0	97.0	107.0	86.0	96.0	106.0	89.0	96.0	103.0	111.0
Outlet	55.4	68.7	78.0	122.3	139.6	155.8	203.1	219.4	235.7	279.0	298.3	317.6	335.8
PDAD-51													
Inlet	293.8	352.5	411.3	470.0	528.8	587.5	646.3	705.0	763.8	822.5	881.3	940.1	998.8
	Air nozzle no. 23			Air nozzle no. 17			Air nozzle no. 14			Air nozzle no. 12			
Purge air	166.0	204.0	230.0	165.5	194.5	216.0	165.0	182.5	198.5	160.5	176.0	182.5	201.5
Outlet	127.8	148.5	181.3	304.5	334.3	371.5	481.3	522.5	565.3	662.0	705.3	757.6	797.3
PDAD-73													
Inlet	432.9	519.5	606.1	692.7	779.3	865.8	952.4	1,039.0	1,125.6	1,212.2	1,298.8	1,385.3	1,471.9
	Air nozzle no. 29			Air nozzle no. 24			Air nozzle no. 17			Air nozzle no. 15			
Purge air	233.0	270.0	311.0	261.0	302.0	339.0	248.0	272.0	295.0	243.0	261.0	282.0	301.0
Outlet	199.9	249.5	295.1	431.7	477.3	526.8	704.4	767.0	830.6	969.2	1,037.8	1,103.3	1,170.9
PDAD-100													
Inlet	579.8	695.8	811.7	927.7	1,043.6	1,159.6	1,275.6	1,391.5	1,507.5	1,623.4	1,739.4	1,855.4	1,971.3
	Air nozzle no. 23			Air nozzle no. 17			Air nozzle no. 14			Air nozzle no. 12			
Purge air	332.0	408.0	460.0	331.0	389.0	432.0	330.0	365.0	397.0	321.0	352.0	365.0	403.0
Outlet	247.8	287.8	351.7	596.7	654.6	727.6	945.6	1,026.5	1,110.5	1,302.4	1,387.4	1,490.4	1,568.3

Dimensions Download CAD data ➔ **www.festo.com**

With prefilter and connecting kit

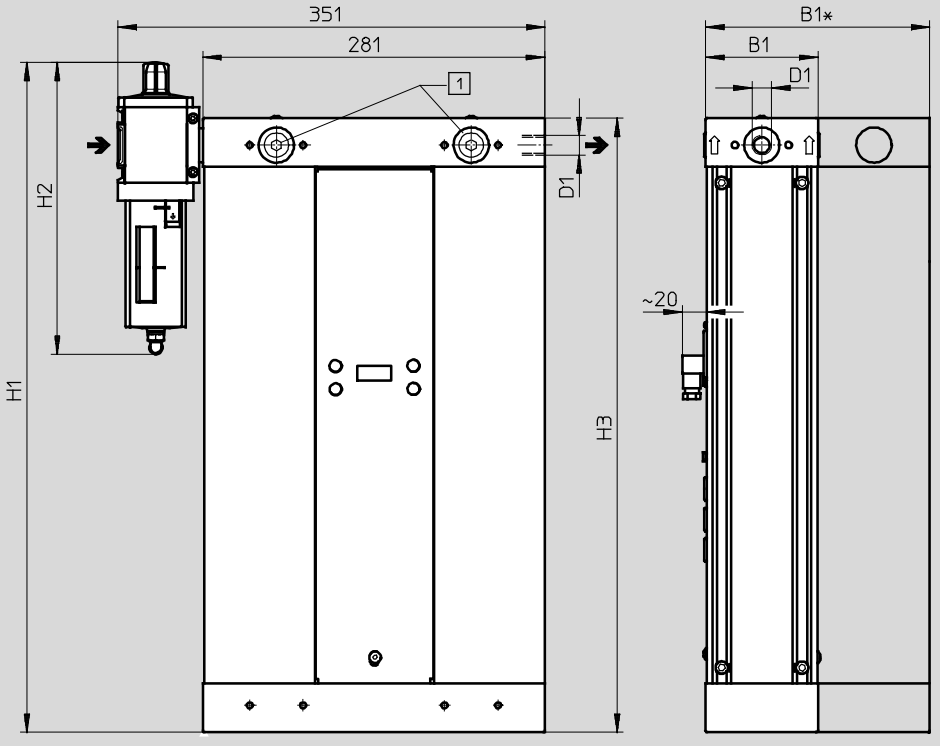

Note

Tube from condensate drain of the prefilter to the dryer is included in the scope of delivery.
The condensate drain port on the dryer with QSL-F push-in fitting is designed for tubing with a diameter of 4 mm (standard O.D. tubing).

1 Blanking plugs

➔ Flow direction

Type	D1	B1	B1*	H1	H2	H3
PDAD-09	G⅜	92	–	491	240	445
PDAD-13	G⅜	92	–	550	240	504
PDAD-22	G⅜	92	–	681	240	635
PDAD-51	G⅜	92	–	1 111	240	1 065
PDAD-73	G½	92	–	1 506	360	1 460
PDAD-100	G½	–	184	1 111	360	1 065

Ordering data

With prefilter, connecting kit, power supply socket

Pneumatic connection	Outlet flow rate under nominal conditions[1] [l/min]	Part No.	Type
G⅜	87	**552170**	**PDAD-09-G⅜**
	126	**552171**	**PDAD-13-G⅜**
	212	**552172**	**PDAD-22-G⅜**
	506	**552173**	**PDAD-51-G⅜**
G½	729	**552174**	**PDAD-73-G½**
	994	**552175**	**PDAD-100-G½**

1) Supply pressure 7 bar, pressure dew point –40 °C, temperature of mediums at inlet 25 °C

Wall mounting kit ABMW

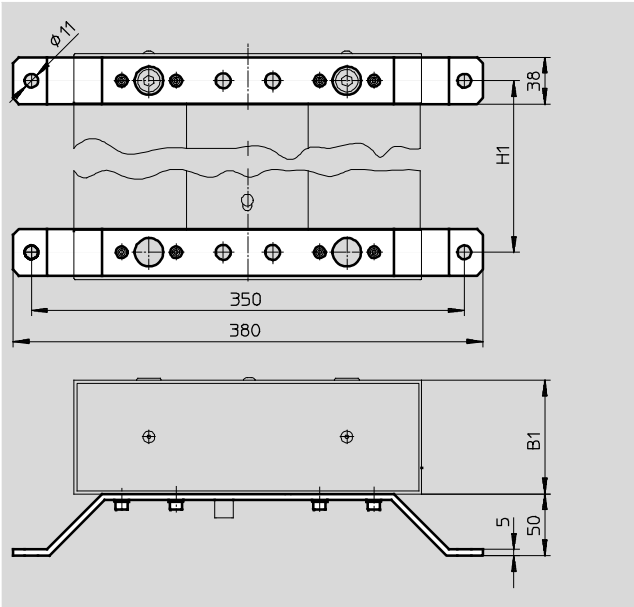

Dimensions and ordering data														
PDAD-09		PDAD-13		PDAD-22		PDAD-51		PDAD-73		PDAD-100		CRC[1]	Part No.	Type
B1	H1	B1	H1	B1	H1	B1	H1	B1	H1	B1	H1			
92	401	92	460	92	591	92	1,021	92	1,416	184	1,021	2	**553756**	**ABMW-PDAD**

1) Corrosion resistance class 2 to Festo standard 940 070
Components subject to moderate corrosion stress. Externally visible parts with primarily decorative surface requirements which are in direct contact with a normal industrial environment or media such as coolants or lubricating agents.

Foot mounting ABMF

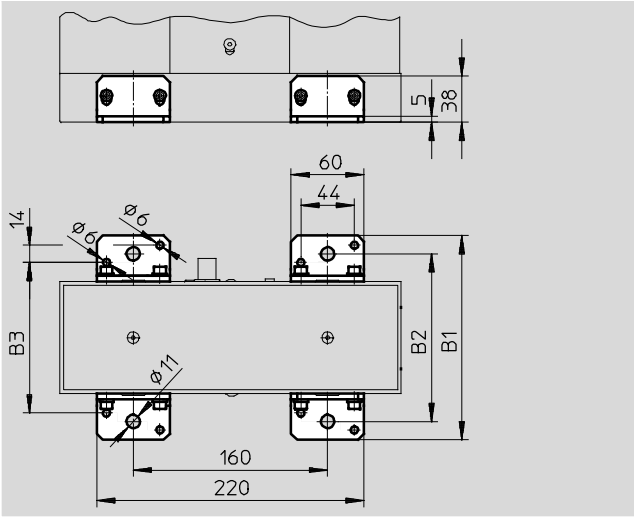

Dimensions and ordering data								
PDAD-09/13/22/51/73			PDAD-100			CRC[1]	Part No.	Type
B1	B2	B3	B1	B2	B3			
168	138	124	260	230	216	2	**553755**	**ABMF-PDAD**

1) Corrosion resistance class 2 to Festo standard 940 070
Components subject to moderate corrosion stress. Externally visible parts with primarily decorative surface requirements which are in direct contact with a normal industrial environment or media such as coolants or lubricating agents.

Service kit PDAD-SP
with 2 drying agent cartridges (4 drying agent cartridges in service kit PDAD-100-SP-...), sealing rings, plastic discs and a reset disc

Operating and environmental conditions		
Operating pressure	[bar]	4 ... 16
Operating medium		Compressed air in accordance with ISO 8573-1:2010 [1:4:1]
Note on operating/ pilot medium		Operation with lubricated medium not possible
Ambient temperature	[°C]	+5 ... +50
Temperature of medium	[°C]	+2 ... +50

Ordering data		
For type	Part No.	Type
PDAD-09	**553749**	**PDAD-09-SP-12000**
PDAD-13	**553750**	**PDAD-13-SP-12000**
PDAD-22	**553751**	**PDAD-22-SP-12000**
PDAD-51	**553752**	**PDAD-51-SP-12000**
PDAD-73	**553753**	**PDAD-73-SP-12000**
PDAD-100	**553754**	**PDAD-100-SP-12000**

Air nozzle ADNA
Set comprising 3 air nozzles for PDAD-09 ... PDAD-73 and 6 air nozzles for PDAD-100 for adjusting the purge air at a supply pressure < 7 bar or > 9 bar

Ordering data					
For type	Air nozzle for supply pressure p			Part No.	Type
	4 ... 6 bar	10 ... 12 bar	13 ... 16 bar		
PDAD-09	No. 9	No. 6	No. 5	**553763**	**ADNA-PDAD-09**
PDAD-13	No. 10	No. 7	No. 6	**553764**	**ADNA-PDAD-13**
PDAD-22	No. 14	No. 10	No. 9	**553765**	**ADNA-PDAD-22**
PDAD-51	No. 23	No. 14	No. 12	**553766**	**ADNA-PDAD-51**
PDAD-73	No. 29	No. 17	No. 15	**553767**	**ADNA-PDAD-73**
PDAD-100	No. 23 (2x)	No. 14 (2x)	No. 12 (2x)	**553768**	**ADNA-PDAD-100**

Micro-filter cartridge MS6-LFM-A
For prefilter

Grade of filtration: 0.01 µm

Ordering data		
For type	Part No.	Type
PDAD-09/13/22/51	**532909**	**MS6-LFM-A**
PDAD-73/100	**552093**	**MS6-LFM-A-HF**