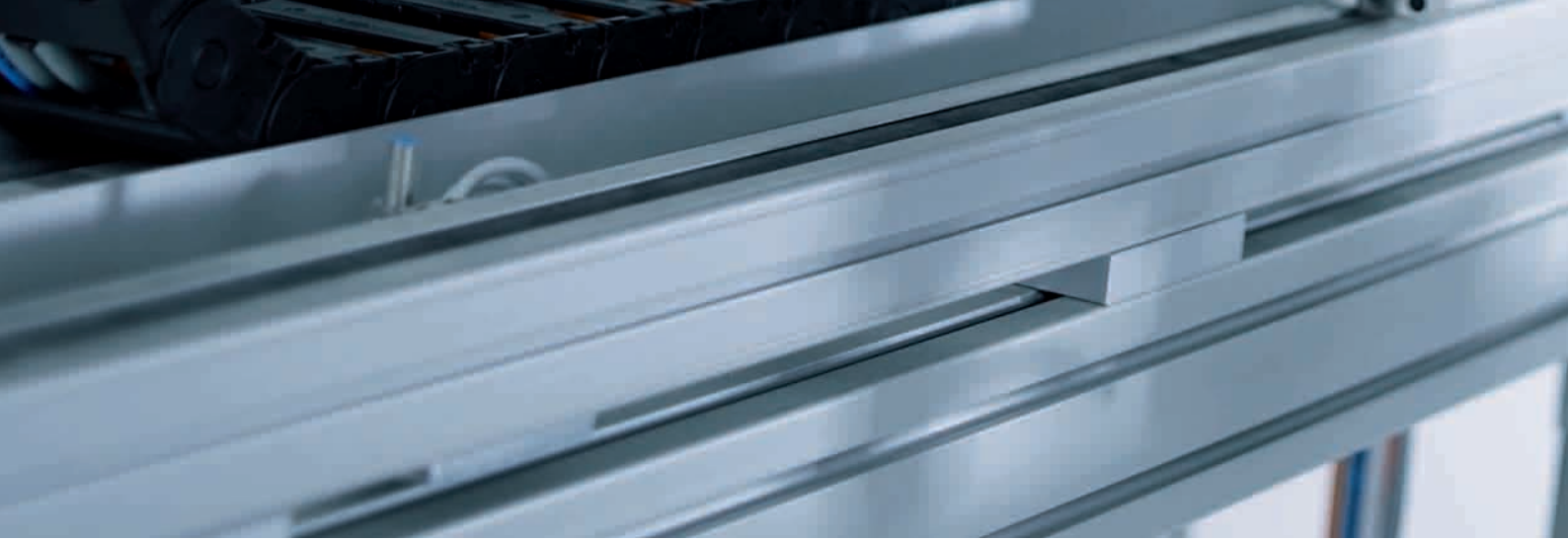

Linear gantries

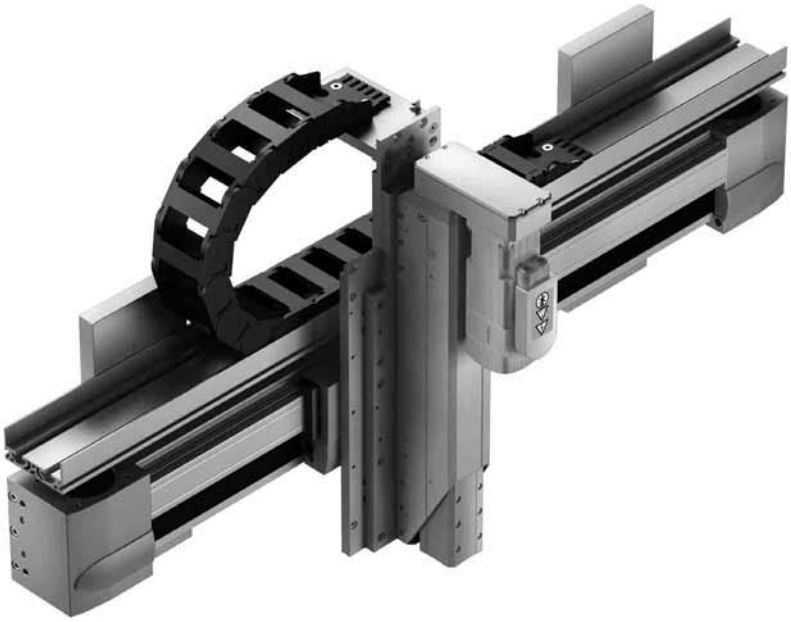

Movements in 2D:
a linear gantry consists of a gantry axis and a yoke drive.
- High mechanical rigidity and sturdy design
- Pneumatic and electrical components – freely combinable
- As electrical solution – variable positioning/any desired intermediate positions

Range of application:
- Ideal for long gantry strokes
- Often used for feeding applications
- Workpiece masses up to 5 kg (effective load up to 10 kg)
- Long gantry strokes up to 3 m and heavy loads up to 10 kg
- High requirements on system resistance to torsion

Example: construction materials industry
Handling, palletising and packing of ceramic tiles

Requirements
- High dynamic response
- Gentle acceleration and braking
- Jerk-free movement
- Good positioning flexibility

Solution
- Linear gantry with toothed belt axes and cantilever axis
- Complete solution, including vacuum gripper

	Type	Important characteristics	Axis design	Effective load	Max. effective strokes	Components
	• Linear gantry as mono axis • Free movement of the Z-axis in the vertical plane (2D)	• High process reliability thanks to installation integration • Pneumatic and electric drives (with freely programmable positions) • Repetition-accurate, centralised direct axis connections • Mini slide on the Z-axis for maximum precision	Y: Gantry axes **Z:** **Slide** **Cantilever axis**	Mono: 0 to 6 kg	Y: Up to 5000 mm Z: Up to 300 mm	Y: DGC/**EGC** Z: DGSL EGSA
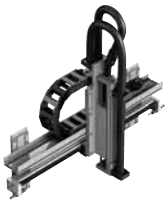	• **See above**	• **See above, points 1–3** • Pneumatic cantilever axis on the Z-axis with high repetition accuracy, high dynamic response and intermediate positions	Y: Gantry axes **Z:** **Handling axis**	Mono: 0 to 5 kg	Y: Up to 5000 mm Z: Up to 200 mm	Y: DGC/**EGC** Z: HMPL
	• **See above**	• **See above, points 1–3** • Pneumatic handling axis on the Z-axis with high rigidity and intermediate positions	Y: Gantry axes **Z:** **Handling axis**	Mono: 0 to 10 kg*	Y: Up to 5000 mm Z: Up to 400 mm	Y: DGC/**EGC** Z: HMP
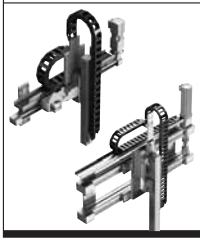	• Linear gantry as mono or duo axis • Free movement of the Z-axis in the vertical plane (2D)	• **See above, points 1–3** • Electric cantilever axis on the Z-axis for large strokes, high dynamic response and low moving dead weight	Y: Gantry axes **Z:** **Cantilever axis**	Mono: 0 to 15 kg Duo: 0 ... 25 kg	Y: Up to 5000 mm Z: Up to 900 mm	Y: DGC/**EGC** Z: DGEA

Higher effective loads of up to 50 kg on request

* With the pneumatic drive DGC, can be used as duo axis

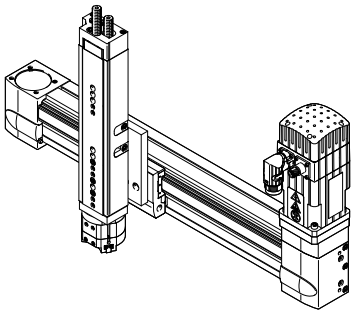

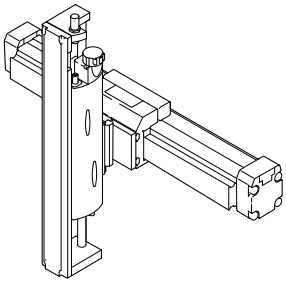

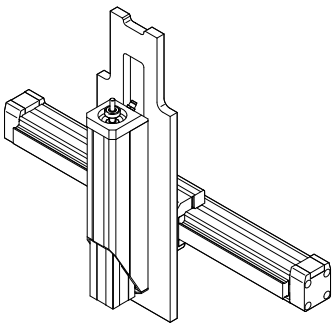

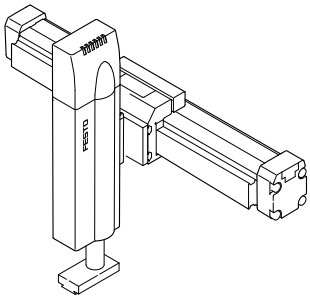

Standard linear gantry LP 15

Effective load up to 15 kg

Motor controller package on electric axes
Servo motor: EMMS-AS
Controller: CMMS/P-AS (CMMD)

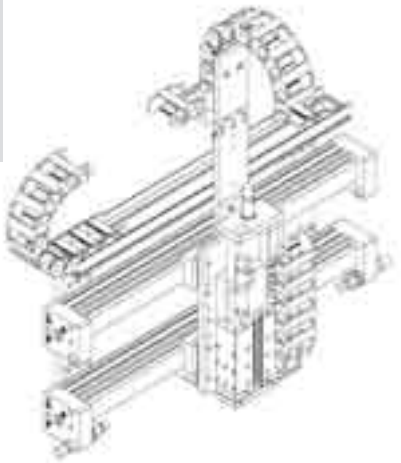

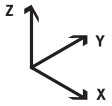

Technical data

		Stroke/mm	Intermed. position	Repetition accuracy/mm	
Z-axis	↕		End position	Intermediate position	
ZR	DGEA-40	0 ... 1000	Any	± 0.05	± 0.05
SP	EGC-80-BS-KF	0 ... 1000	Any	± 0.02	± 0.02
SP	DNCE-40 with FENG	0 ... 500	Any	± 0.02	± 0.02
P	DFM-40	0 ... 400	–	Max. 0.05	–
P	DNC-40 with FENG	0 ... 500	2	± 0.2	–
PS	DNCI-40 with FENG	0 ... 500	2/any **	<± 0.5	<± 0.5/± 2**
Y-axis	⟷				
ZR	EGC-120-TB-KF ***	0 ... 8500	Any	± 0.08	± 0.08
SP	EGC-120-BS-KF ***	0 ... 2500	Any	± 0.02	± 0.02
ZR	EGC-HD-220 ****	0 ... 5000	Any	± 0.08	± 0.08
SP	EGC-HD-220 ****	0 ... 3000	Any	± 0.02	± 0.02
P	DGC-40 + FA ****	0 ... 8500	1*	± 0.02	± 0.02/± 0.1
PS	DGCI-40 + FA ****	0 ... 2000	2/any**	Max ± 0.4	Max ± 0.4/± 2

* More than 1 on request
** 2 with SPC11/CMPX, any with SPC200/CMAX; <± 0.5 mm with SPC11/CMPX/± 2 mm with SPC200/CMAX
*** Max. Z-stroke 200 mm
**** Max. Z-stroke 1000 mm
Grey shading: drive components in the illustration
EGC-HD: available end of 2011

Reference for cycle times

Z-axis

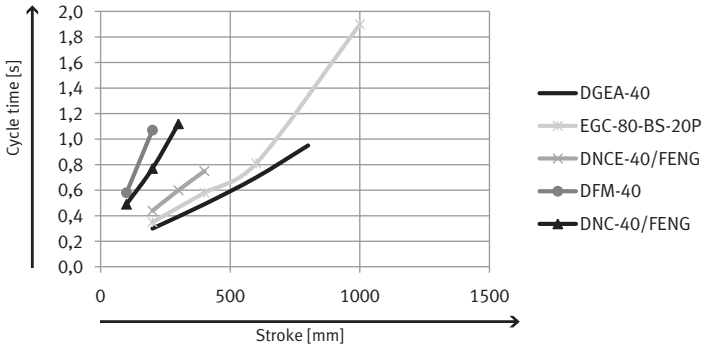

Y-axis

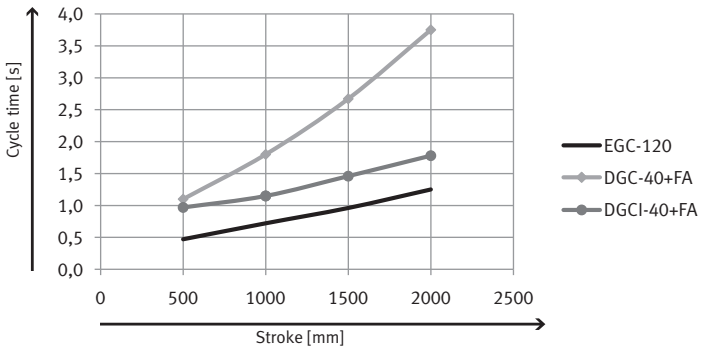

Note

Selection matrix
Types of handling units
→ Pages 6 to 9

Handling components
→ Page 95

Gripping/rotating
Adaptation options
→ Page 71

Control cabinets
→ Page 92

Frames
→ Page 78

CAD drawings/ CAD hotline
2D and 3D drawings
→
Tel. +49 (0)711 347-4667

Individual project engineering and cycle time calculation
→
Tel. +49 (0)711 347-4381

Fax enquiry
Form
→ Page 101

Note
An operating pressure of 6 bar is assumed for all the pneumatic drives shown here.

Overview of Festo control products

	FED-CEC	CPX terminal	
	 Integrated controller FED-CEC	CoDeSys controller CPX-CEC-C1	 Motion controller CPX-CEC-M1
	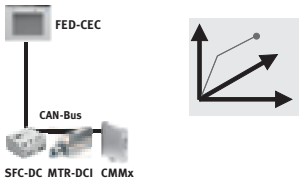 Single axis (point-to-point asynchronous)	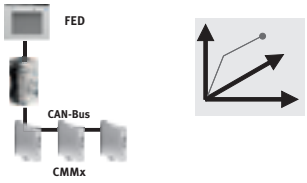 C1: single axis M1: interpolation	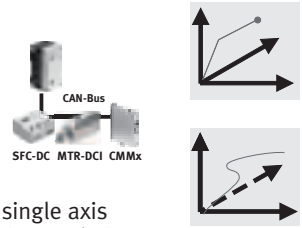 C1: single axis M1: interpolation
Maximum number of possible axes	Recommended: 8 axes Note: one axis is treated as a CANopen node. 128 nodes are possible (as defined by CANopen specifications).	Recommended: 8 axes Note: one axis is treated as a CANopen node. 128 nodes are possible (as defined by CANopen specifications).	Recommended: 8 axes Note: one axis is treated as a CANopen node. 128 nodes are possible (as defined by CANopen specifications).
Motion	• Point-to-point asynchronous • Every axis moves with its own pre-defined parameter • The axes do not reach their end positions at the same time and the path is not defined		
			• 2.5D interpolation • PLC Open
Special features	Integrated controller in a display screen	Function integration on the CPX valve platform	
			• CNC editor • DXF import • Cam disk editor
Application examples	• Handling systems • Pick & place, palletising		Path control, bonding, cutting, handling, flying saw, cam disk
Programming environment	CoDeSys	CoDeSys	CoDeSys + Softmotion

Modular control		CMXR robotic controller	
Modular controller CECX-C1	Motion controller CECX-M1	CMXR-C1 (Basic)	CMXR-C2 (Advanced)
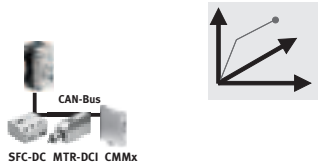 Single axis (point-to-point asynchronous)	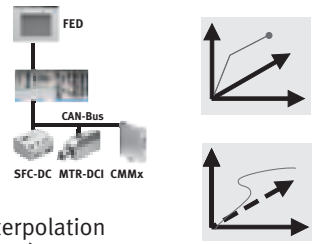 Interpolation (2.5D)	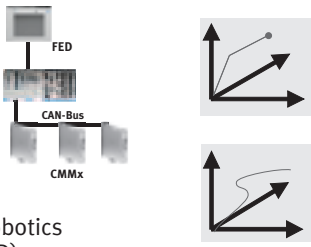 Robotics (3D)	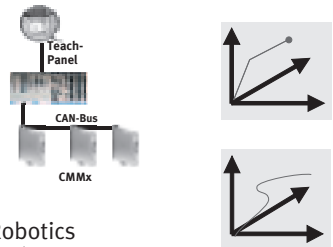 Robotics (3D)
Recommended: 8 axes Note: one axis is treated as a CANopen node. 128 nodes are possible (as defined by CANopen specifications).		Max. 6 interpolated axes, of which max. 3 basic axes and 1 orientation axis and max. 3 dependent auxiliary axes that are interpolated together with the kinematics system.	
			Additional single axes (not interpolated together with others) can be controlled via the integrated CoDeSys PLC. Recommended: 16 axes.
		3D contour interpolation with an orientation axis for kinematics systems with up to 4 degrees of freedom. E.g. 3D gantry with an axis of rotation on the front end.	
	• 2.5D interpolation • PLC Open		CoDeSys control: point-to-point asynchronous
• Powerful PLC • Encoder interface • Interrupt function • Fast clock pulse inputs • Profibus master • Two Canbus masters • RS 232/ RS 485-A/422-A		• Economical design and configuration with the Festo Configuration Tool (FCT) • Simple programming of motions with Festo Teach Language (FTL), no specialist expertise required • Optional teach pendant with 2-channel permission button • Reduced speed in manual override mode • Automatic repositioning when continuing interrupted motions • Simple teaching of positions • Definition of tools, allowing easy use of multiple grippers • Real orientation axes on the front end • Integrated kinematics models e.g. for Cartesian systems, tripod, H- and T-gantries	
	• CNC editor • DXF import • Cam disk editor		• Increased flexibility with the integrated CoDeSys PLC, e.g. for the integration of vision systems • Tracking function for applications involving selecting items from a conveyor belt • Speed-independent path switching points with time compensation, e.g. for bonding applications • Complete automation of a cell is possible
• Handling systems • Pick & place, palletising	Path control, bonding, cutting, handling, flying saw, cam disk	Handling, palletising, bonding, metered dispensing, painting, cutting	Tracking applications such as processing of moving parts on a conveyor belt or synchronised kinematics movement with up to 6D
CoDeSys	CoDeSys + Softmotion	Festo Teach Language (FTL)	FTL + CoDeSys