Filter regulators MS-LFR, MS series

FESTO

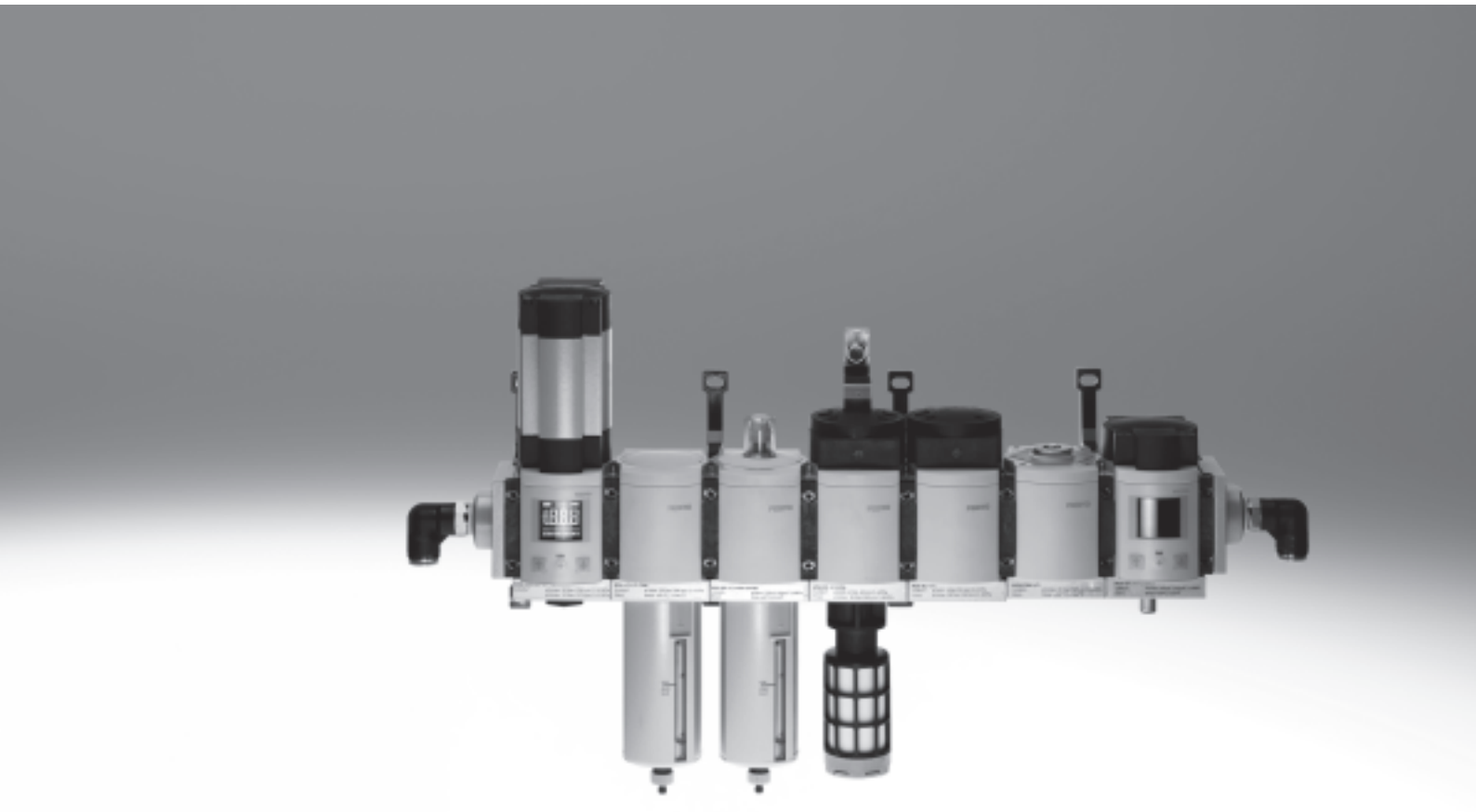

Filter regulators MS-LFR, MS series

Product range overview – MS series service units

Type		Size	Pneumatic connection in housing	Connecting plate	Pressure regulation range [bar]						Grade of filtration [µm]			
					0.05 ... 0.7	0.05 ... 2.5	0.1 ... 4	0.3 ... 7	0.1 ... 12	0.5 ... 16	0.01	1	5	40
Code				AG...	D2	D4	D5	D6	D7	D8	A	B	C	E
Service units														
MSB-FRC	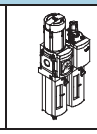	4	G⅛, G¼	G⅛, G¼, G⅜	–	–	–	■	■	–	–	–	■	■
		6	G¼, G⅜, G½	G¼, G⅜, G½, G¾	–	–	–	■	■	–	–	–	■	■
		9	–											
		12	–											
Service unit combinations (further variants can be ordered using the configurator ➔ Internet: msb4, msb6 or msb9)														
MSB	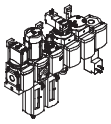	4	G¼	G⅛, G¼, G⅜	–	–	–	■	■	–	–	–	■	■
		6	G½	G¼, G⅜, G½, G¾	–	–	–	■	■	–	–	–	■	■
		9	–											
		12	–											
Individual devices														
Filter regulators **MS-LFR**	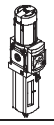	4	G⅛, G¼	G⅛, G¼, G⅜	–	–	■	■	■	–	–	–	■	■
		6	G¼, G⅜, G½	G¼, G⅜, G½, G¾	–	–	■	■	■	■	–	–	■	■
		9	G¾, G1	G½, G¾, G1, G1¼, G1½	–	–	■	■	■	■	–	–	■	■
		12	–	G1, G1¼, G1½, G2	–	–	–	■	■	■	–	–	■	■
Filters **MS-LF**	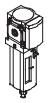	4	G⅛, G¼	G⅛, G¼, G⅜	–	–	–	–	–	–	–	–	■	■
		6	G¼, G⅜, G½	G¼, G⅜, G½, G¾	–	–	–	–	–	–	–	–	■	■
		9	G¾, G1	G½, G¾, G1, G1¼, G1½	–	–	–	–	–	–	–	–	■	■
		12	–	G1, G1¼, G1½, G2	–	–	–	–	–	–	–	–	■	■
Fine and micro filters **MS-LFM**	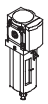	4	G⅛, G¼	G⅛, G¼, G⅜	–	–	–	–	–	–	■	■	–	–
		6	G¼, G⅜, G½	G¼, G⅜, G½, G¾	–	–	–	–	–	–	■	■	–	–
		9	G¾, G1	G½, G¾, G1, G1¼, G1½	–	–	–	–	–	–	■	■	–	–
		12	–	G1, G1¼, G1½, G2	–	–	–	–	–	–	■	■	–	–
Activated carbon filters **MS-LFX**	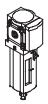	4	G⅛, G¼	G⅛, G¼, G⅜	–	–	–	–	–	–	–	–	–	–
		6	G¼, G⅜, G½	G¼, G⅜, G½, G¾	–	–	–	–	–	–	–	–	–	–
		9	G¾, G1	G½, G¾, G1, G1¼, G1½	–	–	–	–	–	–	–	–	–	–
		12	–	G1, G1¼, G1½, G2	–	–	–	–	–	–	–	–	–	–
Water separators **MS-LWS**	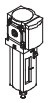	4	–											
		6	G¼, G⅜, G½	G¼, G⅜, G½, G¾	–	–	–	–	–	–	–	–	–	–
		9	G¾, G1	G½, G¾, G1, G1¼, G1½	–	–	–	–	–	–	–	–	–	–
		12	–	G1, G1¼, G1½, G2	–	–	–	–	–	–	–	–	–	–

Filter regulators MS-LFR, MS series

Product range overview – MS series service units

Type	Size	Bowl guard		Condensate drains				Pressure indicator					Security		Options		➔ Page/ Internet
		Plastic bowl with plastic bowl guard	Metal bowl	Manual rotary	Semi-automatic	Fully automatic	External, fully automatic, electrical	Cover plate (without pressure gauge)	Integrated MS pressure gauge	Adapter plate for EN pressure gauge G1/8	Adapter plate for EN pressure gauge G1/4	Pressure sensor	Rotary knob with detent, lockable via accessories	Rotary knob with integrated lock	Silencer	Flow direction from right to left	
Code		R	U	M	H	V	E...	VS	AG	A8	A4	AD...	AS	E11	S	Z	
Service units																	
MSB-FRC	4	■	–	■	–	■	–	–	■	–	–	–	■	–	–	■	msb4
	6	■	■	■	–	■	–	–	■	–	–	–	■	–	–	■	msb6
	9	–															–
	12	–															–
Service unit combinations																	
MSB	4	■	■	■	–	■	–	–	■	–	–	–	■	–	–	■	msb4
	6	■	■	■	–	■	–	–	■	–	–	–	■	–	–	■	msb6
	9	–															–
	12	–															–
Individual devices																	
Filter regulators **MS-LFR**	4	■	■	■	■	■	–	■	■	■	■	■	■	■	–	■	8
	6	■	■	■	■	■	■	■	■	–	■	■	■	■	–	■	8
	9	–	■	■	■	■	■	■	■	–	■	■	■	■	–	■	24
	12	–	■	■	–	■	■	■	■	–	■	–	■	■	–	■	36
Filters **MS-LF**	4	■	■	■	■	■	–	–	–	–	–	–	–	–	–	■	ms4-lf
	6	■	■	■	■	■	■	–	–	–	–	–	–	–	–	■	ms6-lf
	9	–	■	■	■	■	■	–	–	–	–	–	–	–	–	■	ms9-lf
	12	–	■	■	–	■	■	–	–	–	–	–	–	–	–	■	ms12-lf
Fine and micro filters **MS-LFM**	4	■	■	■	■	■	–	–	–	–	–	–	–	–	–	■	ms4-lfm
	6	■	■	■	■	■	■	–	–	–	–	–	–	–	–	■	ms6-lfm
	9	–	■	■	■	■	■	–	–	–	–	–	–	–	–	■	ms9-lfm
	12	–	■	■	–	■	■	–	–	–	–	–	–	–	–	■	ms12-lfm
Activated carbon filters **MS-LFX**	4	■	■	–	–	–	–	–	–	–	–	–	–	–	–	■	ms4-lfx
	6	■	■	–	–	–	–	–	–	–	–	–	–	–	–	■	ms6-lfx
	9	–	■	–	–	–	–	–	–	–	–	–	–	–	–	■	ms9-lfx
	12	–	■	–	–	–	–	–	–	–	–	–	–	–	–	■	ms12-lfx
Water separators **MS-LWS**	4	–															–
	6	–	■	–	–	■	■	–	–	–	–	–	–	–	–	■	ms6-lws
	9	–	■	–	–	■	■	–	–	–	–	–	–	–	–	■	ms9-lws
	12	–	■	–	–	■	■	–	–	–	–	–	–	–	–	■	ms12-lws

Filter regulators MS-LFR, MS series

Product range overview – MS series service units

Type		Size	Pneumatic connection in housing	Connecting plate	Pressure regulation range [bar]						Supply voltage			
					0.05 ... 0.7	0.05 ... 2.5	0.1 ... 4	0.3 ... 7	0.1 ... 12	0.5 ... 16	24 V DC, connection pattern to EN 175301	24 V DC, connection M12 to IEC 61076-2-101	110 V AC, connection pattern to EN 175301	230 V AC, connection pattern to EN 175301
Code				AG...	D2	D4	D5	D6	D7	D8	V24	V24P	V110	V230
Individual devices														
Pressure regulators **MS-LR**		4	G⅛, G¼	G⅛, G¼, G⅜	–	–	■	■	■	–	–	–	–	–
		6	G¼, G⅜, G½	G¼, G⅜, G½, G¾	–	–	■	■	■	■	–	–	–	–
		9	G¾, G1	G½, G¾, G1, G1¼, G1½	–	–	■	■	■	■	–	–	–	–
		12	–	G1, G1¼, G1½, G2	–	–	–	■	■	■	–	–	–	–
Pressure regulators **MS-LRB**		4	G¼	G⅛, G¼, G⅜	–	–	■	■	■	–	–	–	–	–
		6	G½	G¼, G⅜, G½, G¾	–	–	■	■	■	■	–	–	–	–
		9	–											
		12	–											
Precision pressure regulators **MS-LRP**		4	–											
		6	G¼, G⅜, G½	G¼, G⅜, G½, G¾	■	■	■	–	■	–	–	–	–	–
		9	–											
		12	–											
Precision pressure regulators **MS-LRPB**		4	–											
		6	G½	G¼, G⅜, G½, G¾	■	■	■	–	■	–	–	–	–	–
		9	–											
		12	–											
Electrical pressure regulators **MS-LRE**		4	–											
		6	G¼, G⅜, G½	G¼, G⅜, G½, G¾	–	–	■	■	■	■	–	–	–	–
		9	–											
		12	–											
Lubricators **MS-LOE**	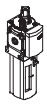	4	G⅛, G¼	G⅛, G¼, G⅜	–	–	–	–	–	–	–	–	–	–
		6	G¼, G⅜, G½	G¼, G⅜, G½, G¾	–	–	–	–	–	–	–	–	–	–
		9	G¾, G1	G½, G¾, G1, G1¼, G1½	–	–	–	–	–	–	–	–	–	–
		12	–	G1, G1¼, G1½, G2	–	–	–	–	–	–	–	–	–	–
On-off valves, manually actuated **MS-EM(1)**		4	G⅛, G¼	G⅛, G¼, G⅜	–	–	–	–	–	–	–	–	–	–
		6	G¼, G⅜, G½	G¼, G⅜, G½, G¾	–	–	–	–	–	–	–	–	–	–
		9	G¾, G1	G½, G¾, G1, G1¼, G1½	–	–	–	–	–	–	–	–	–	–
		12	–	G1, G1¼, G1½, G2	–	–	–	–	–	–	–	–	–	–
On-off valves, electrically actuated **MS-EE**		4	G⅛, G¼	G⅛, G¼, G⅜	–	–	–	–	–	–	■	–	■	■
		6	G¼, G⅜, G½	G¼, G⅜, G½, G¾	–	–	–	–	–	–	■	–	■	■
		9	G¾, G1	G½, G¾, G1, G1¼, G1½	–	–	–	–	–	–	■	■	■	■
		12	–	G1, G1¼, G1½, G2	–	–	–	–	–	–	■	■	■	■
Soft-start valves, pneumatically actuated **MS-DL**		4	G⅛, G¼	G⅛, G¼, G⅜	–	–	–	–	–	–	–	–	–	–
		6	G¼, G⅜, G½	G¼, G⅜, G½, G¾	–	–	–	–	–	–	–	–	–	–
		9	–											
		12	–	G1, G1¼, G1½, G2	–	–	–	–	–	–	–	–	–	–
Soft-start valves, electrically actuated **MS-DE**		4	G⅛, G¼	G⅛, G¼, G⅜	–	–	–	–	–	–	■	–	■	■
		6	G¼, G⅜, G½	G¼, G⅜, G½, G¾	–	–	–	–	–	–	■	–	■	■
		9	–											
		12	–	G1, G1¼, G1½, G2	–	–	–	–	–	–	■	■	■	■

Filter regulators MS-LFR, MS series

Product range overview – MS series service units

Type	Size	Bowl guard		Pressure indicator					Security		Options		➔ Page/ Internet
		Plastic bowl with plastic bowl guard	Metal bowl	Cover plate (without pressure gauge)	Integrated MS pressure gauge	Adapter plate for EN pressure gauge G1/8	Adapter plate for EN pressure gauge G1/4	Pressure sensor	Rotary knob with detent, lockable via accessories	Rotary knob with integrated lock	Silencer	Flow direction from right to left	
Code		R	U	VS	AG	A8	A4	AD...	AS	E11	S	Z	
Individual devices													
Pressure regulators **MS-LR**	4	–	–	■	■	■	■	■	■	■	–	■	ms4-lr
	6	–	–	■	■	–	■	■	■	■	–	■	ms6-lr
	9	–	–	■	■	–	■	■	■	■	–	■	ms9-lr
	12	–	–	■	■	–	■	–	■	■	–	■	ms12-lr
Pressure regulators **MS-LRB**	4	–	–	■	■	■	■	■	■	■	–	■	ms4-lrb
	6	–	–	■	■	–	■	■	■	■	–	■	ms6-lrb
	9	–											–
	12	–											–
Precision pressure regulators **MS-LRP**	4	–											–
	6	–	–	■	–	■	■	■	■	■	–	■	ms6-lrp
	9	–											–
	12	–											–
Precision pressure regulators **MS-LRPB**	4	–											–
	6	–	–	■	–	■	■	■	■	■	–	■	ms6-lrpb
	9	–											–
	12	–											–
Electrical pressure regulators **MS-LRE**	4	–											–
	6	–	–	■	■	–	■	–	–	–	–	■	ms6-lre
	9	–											–
	12	–											–
Lubricators **MS-LOE**	4	■	■	–	–	–	–	–	–	–	–	■	ms4-loe
	6	■	■	–	–	–	–	–	–	–	–	■	ms6-loe
	9	–	■	–	–	–	–	–	–	–	–	■	ms9-loe
	12	–	■	–	–	–	–	–	–	–	–	■	ms12-loe
On-off valves, manually actuated **MS-EM(1)**	4	–	–	■	■	■	■	■	–	–	■	■	ms4-em1
	6	–	–	■	■	–	■	■	–	–	■	■	ms6-em1
	9	–	–	■	■	–	■	–	–	–	■	■	ms9-em
	12	–	–	■	■	–	■	–	–	–	■	■	ms12-em
On-off valves, electrically actuated **MS-EE**	4	–	–	■	■	■	■	■	–	–	■	■	ms4-ee
	6	–	–	■	■	–	■	■	–	–	■	■	ms6-ee
	9	–	–	■	■	–	■	–	–	–	■	■	ms9-ee
	12	–	–	■	■	–	■	–	–	–	■	■	ms12-ee
Soft-start valves, pneumatically actuated **MS-DL**	4	–	–	■	■	■	■	■	–	–	–	■	ms4-dl
	6	–	–	■	■	–	■	■	–	–	–	■	ms6-dl
	9	–											–
	12	–	–	■	■	–	■	–	–	–	–	■	ms12-dl
Soft-start valves, electrically actuated **MS-DE**	4	–	–	■	■	■	■	■	–	–	–	■	ms4-de
	6	–	–	■	■	–	■	■	–	–	–	■	ms6-de
	9	–											–
	12	–	–	■	■	–	■	–	–	–	–	■	ms12-de

Filter regulators MS-LFR, MS series

Product range overview – MS series service units

Type		Size	Pneumatic connection in housing	Connecting plate	Performance Level		Supply voltage			
					Category 1, 1-channel	Category 4, 2-channel with self-monitoring	24 V DC, connection pattern to EN 175301	24 V DC, connection M12 to IEC 61076-2-101/ to EN 60947-5-2	110 V AC, connection pattern to EN 175301	230 V AC, connection pattern to EN 175301
Code				AG...	C	E	V24	V24P	V110	V230
Individual devices										
Soft start and exhaust valves **MS-SV-C**		4	–							
		6	G1/2	G1/4, G3/8, G1/2, G3/4	■	–	■	■	■	■
		9	G3/4, G1	G1/2, G3/4, G1, G1 1/4, G1 1/2	■	–	■	■	■	■
		12	–							
Soft start and exhaust valves **MS-SV-E**		4	–							
		6	G1/2	G1/4, G3/8, G1/2, G3/4	–	■	■	–	–	–
		9	–							
		12	–							
Membrane air dryers **MS-LDM1**	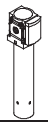	4	G1/8, G1/4	G1/8, G1/4, G3/8	–	–	–	–	–	–
		6	G1/4, G3/8, G1/2	G1/4, G3/8, G1/2, G3/4	–	–	–	–	–	–
		9	–							
		12	–							
Branching modules **MS-FRM**		4	G1/8, G1/4	G1/8, G1/4, G3/8	–	–	–	–	–	–
		6	G1/4, G3/8, G1/2	G1/4, G3/8, G1/2, G3/4	–	–	–	–	–	–
		9	G3/4, G1	G1/2, G3/4, G1, G1 1/4, G1 1/2	–	–	–	–	–	–
		12	–	G1, G1 1/4, G1 1/2, G2	–	–	–	–	–	–
Distributor blocks **MS-FRM-FRZ**		4	G1/4	–	–	–	–	–	–	–
		6	G1/2	–	–	–	–	–	–	–
		9	–							
		12	–							
Flow sensors **SFAM**		4	–							
		6	G1/2	G1/2	–	–	–	–	–	–
		9	–	G1, G1 1/2	–	–	–	–	–	–
		12	–							

Filter regulators MS-LFR, MS series

Product range overview – MS series service units

Type	Size	Bowl guard		Pressure indicator					Switch output		Options		➔ Page/ Internet
		Plastic bowl with plastic bowl guard	Metal bowl	Cover plate (without pressure gauge)	Integrated MS pressure gauge	Adapter plate for EN pressure gauge G⅛	Adapter plate for EN pressure gauge G¼	Pressure sensor	2x PNP or NPN, 1 analogue output 4 ... 20 mA	2x PNP or NPN, 1 analogue output 0 ... 10 V	Silencer	Flow direction from right to left	
Code		R	U	VS	AG	A8	A4	AD...	2SA	2SV	S	Z/R	
Individual devices													
Soft start and exhaust valves **MS-SV-C**	4	–											–
	6	–	–	■	■	–	■	■	–	–	■	■	ms6-sv
	9	–	–	■	■	–	■	■	–	–	■	■	ms9-sv
	12	–											–
Soft start and exhaust valves **MS-SV-E**	4	–											–
	6	–	–	■	■	–	■	■	–	–	■	■	ms6-sv
	9	–											–
	12	–											–
Membrane air dryers **MS-LDM1**	4	–	■	–	–	–	–	–	–	–	–	■	ms4-ldm1
	6	–	■	–	–	–	–	–	–	–	–	■	ms6-ldm1
	9	–											–
	12	–											–
Branching modules **MS-FRM**	4	–	–	■	■	■	■	■	–	–	–	■	ms4-frm
	6	–	–	■	■	–	■	■	–	–	–	■	ms6-frm
	9	–	–	■	■	–	■	■	–	–	–	■	ms9-frm
	12	–	–	■	–	–	–	–	–	–	–	–	ms12-frm
Distributor blocks **MS-FRM-FRZ**	4	–	–	–	–	–	–	–	–	–	–	■	ms4-frm
	6	–	–	–	–	–	–	–	–	–	–	■	ms6-frm
	9	–											–
	12	–											–
Flow sensors **SFAM**	4	–											–
	6	–	–	–	–	–	–	–	■	■	–	■	sfam-62
	9	–	–	–	–	–	–	–	■	■	–	■	sfam-90
	12	–											–

Filter regulators MS4/MS6-LFR, MS series

Peripherals overview

Filter regulator MS4/MS6-LFR

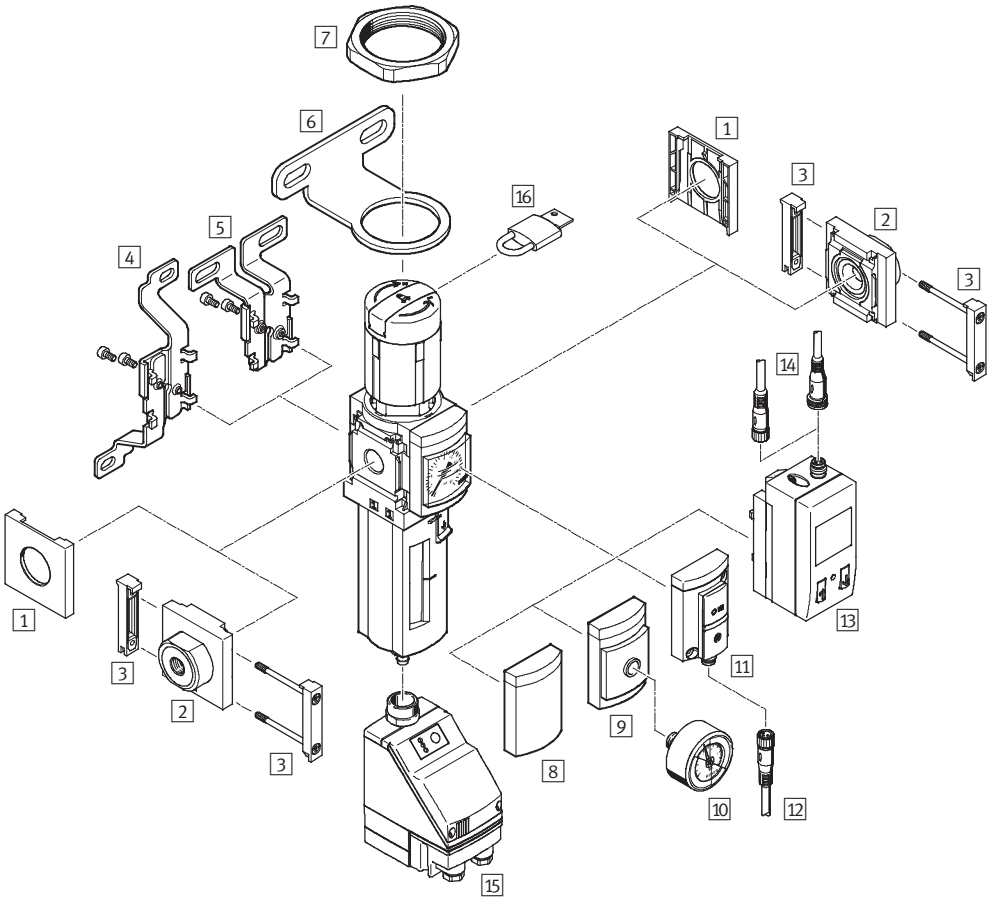

Note

Additional accessories:

- Module connector for combination with size MS4/MS6 or size MS9 ➔ Internet: amv, rmv, armv
- Adapter plate for mounting on profiles ➔ Internet: ipm-80, ipm-40-80, ipm-80-80

Filter regulators MS4/MS6-LFR, MS series

Peripherals overview

Mounting attachments and accessories		Individual device		Combination		➔ Page/Internet
		Without connecting plate	With connecting plate	Without connecting plate	With connecting plate	
1	Cover cap MS4/6-END	■	–	■	–	ms4-end, ms6-end
2	Connecting plate MS4/6-AG...	–	■	–	■	ms4-ag, ms6-ag
3	Module connector MS4/6-MV	–	■	■	■	ms4-mv, ms6-mv
4	Mounting bracket MS4/6-WB	■	■	–	–	ms4-wb, ms6-wb
5	Mounting bracket MS4-WBM	■	■	–	–	ms4-wbm
6	Mounting bracket MS4/6-WR	■	■	–	–	ms4-wr, ms6-wr
7	Hex nut MS4/6-WRS	■	■	■	■	ms4-wrs, ms6-wrs
8	Cover plate VS	■	■	■	■	22
9	Adapter plate for EN pressure gauge ⅛/¼ A8/A4	■	■	■	■	22
10	Pressure gauge MA	■	■	■	■	47
11	Pressure sensor without display AD7 ... AD10	■	■	■	■	22
12	Connecting cable NEBU-M8...-LE3	■	■	■	■	47
13	Pressure sensor with display AD1 ... AD4	■	■	■	■	22
14	Connecting cable NEBU-M8...-LE3/NEBU-M12...-LE4	■	■	■	■	47
15	Fully automatic condensate drain, electrically actuated E2/E3/E4	■	■	■	■	22
16	Padlock LRVS-D	■	■	■	■	47
–	Mounting bracket MS4/6-WP/WPB/WPE/WPM	–	■	■	■	ms4-wp, ms6-wp

Filter regulators MS4/MS6-LFR, MS series

Type codes

MS	6	–	LFR	–	½	–	D7	–	E	R	M	–	AS

Series	
MS	Standard service unit

Size	
4	Grid dimension 40 mm
6	Grid dimension 62 mm

Service function	
LFR	Filter regulator

Pneumatic connection	
MS4	
⅛	Thread G⅛
¼	Thread G¼
MS6	
¼	Thread G¼
⅜	Thread G⅜
½	Thread G½

Pressure regulation range	
D6	Pressure regulation range 0.3 … 7 bar
D7	Pressure regulation range 0.5 … 12 bar

Grade of filtration	
C	5 µm
E	40 µm

Bowl guard	
R	Plastic bowl guard
U	Integrated as metal bowl

Condensate drain	
M	Manual rotary
V	Fully automatic

Security	
AS	Standard rotary knob with detent, lockable via accessories

Additional variants can be ordered using the modular system ➔ 22

- Connecting plates
- Pressure regulation range
- Condensate drain
- Pressure gauge alternatives
- Alternative pressure gauge scale
- Secondary venting
- Rotary knob
- Security
- Type of mounting
- Alternative flow direction

Filter regulators MS4/MS6-LFR, MS series

Technical data

Manual rotary condensate drain, with pressure gauge

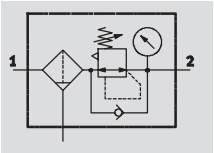

Semi or fully automatic condensate drain, with pressure gauge

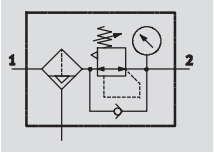

With this device, the filter and pressure regulator are combined into a single unit. The sintered filter with water separator removes contamination, pipe sinter, rust and condensate from the compressed air.

Flow rate
850 … 7,200 l/min
Temperature range
–10 … +60 °C
Pressure
0.8 … 20 bar
www.festo.com/en/Spare_parts_service

Wearing parts kits
➔ 21

- Good regulation characteristics with low hysteresis and primary pressure compensation
- Good particle and condensate separation
- Available with or without secondary venting
- High flow rate
- Directly-actuated diaphragm regulator
- Four pressure regulation ranges: 0.3 … 4 bar, 0.3 … 7 bar, 0.5 … 12 bar and 0.5 … 16 bar
- Regulator lock for protecting the values against adjustment
- Two pressure gauge connections for different fitting options
- Return flow option for exhausting from output 2 to output 1 already integrated
- Optional pressure sensor
- Choice of filter cartridges: 5 µm or 40 µm
- New filter cartridges ➔ 46

General technical data						
Size		MS4		MS6		
Pneumatic connection 1, 2		G⅛	G¼	G¼	G⅜	G½
Constructional design		Filter regulator with/without pressure display				
Regulating function		Output pressure constant, with return flow action, with/without secondary venting				
Type of mounting		Via accessories				
		In-line installation				
		Front panel mounting				
Mounting position		Vertical ±5°				
Grade of filtration	[µm]	5				
		40				
Air purity class at the output		Compressed air in accordance with ISO 8573-1:2010 [6:4:4] (Grade of filtration 5 µm)				
		Compressed air in accordance with ISO 8573-1:2010 [7:4:4] (Grade of filtration 40 µm)				
Bowl guard		Plastic bowl guard				
		Integrated as metal bowl				
Condensate drain		Manual rotary				
		Semi-automatic				
		Fully automatic				
		–		Fully automatic, electrically actuated		
Regulator lock		Rotary knob with detent				
		Rotary knob with detent, lockable via accessories				
		Rotary knob with integrated lock				
Pressure regulation range	D5 [bar]	0.3 … 4				
	D6 [bar]	0.3 … 7				
	D7 [bar]	0.5 … 12 (0.5 … 10 with pressure sensor variant AD…)				
	D8 [bar]	–		0.5 … 16		
Max. hysteresis	[bar]	0.25				
Pressure display		Via pressure sensor for displaying output pressure via LCD display and electrical output				
		Via pressure sensor for displaying output pressure via operational status indicator and electrical output				
		Via pressure gauge for displaying output pressure				
Max. condensate volume	[cm³]	19 (with plastic bowl guard) 25 (with metal bowl)		38		

Note: This product conforms to ISO 1179-1 and ISO 228-1

Standard nominal flow rate qnN[1] [l/min]						
Size		MS4		MS6		
Pneumatic connection		G⅛	G¼	G¼	G⅜	G½
D5 – Pressure regulation range 0.3 … 4 bar						
Grade of filtration	5 µm	900[2]	1,800[2]	2,000[2]	5,500[2]	6,900[2]
	40 µm	1,100[2]	1,900[2]	2,200[2]	6,000[2]	7,200[2]
D6 – Pressure regulation range 0.3 … 7 bar						
Grade of filtration	5 µm	900	1,500	2,700	5,000	5,600
	40 µm	1,000	1,700	2,800	5,700	6,200
D7 – Pressure regulation range 0.5 … 12 bar						
Grade of filtration	5 µm	850	1,200	2,200	3,500	4,000
	40 µm	900	1,500	2,500	4,000	4,500
D8 – Pressure regulation range 0.5 … 16 bar						
Grade of filtration	5 µm	–	–	2,000	3,300	3,800
	40 µm	–	–	2,300	3,500	4,000

1) Measured at p1 = 10 bar and p2 = 6 bar, Δp = 1 bar
2) Measured at p1 = 10 bar and p2 = 3 bar, Δp = 1 bar

Operating and environmental conditions								
Condensate drain		Manual rotary M		Semi-automatic H		Fully automatic V		Fully automatic, electrically actuated E2/E3/E4
Size		MS4	MS6	MS4	MS6	MS4	MS6	MS6
Operating pressure	[bar]	0.8 … 14	0.8 … 20	1.5 … 12	1.5 … 12	2 … 12	2 … 12	0.8 … 16
Operating medium		Compressed air in accordance with ISO 8573-1:2010 [–:4:–]		Compressed air in accordance with ISO 8573-1:2010 [–:4:–]		Compressed air in accordance with ISO 8573-1:2010 [7:4:–]		Compressed air in accordance with ISO 8573-1:2010 [–:4:–]
		Inert gases						
Ambient temperature	[°C]	–10 … +60		+5 … +60		+5 … +60		+1 … +60
Ambient temperature with pressure sensor AD…	[°C]	0 … +50		+5 … +50		+5 … +50		+1 … +50
Temperature of medium	[°C]	–10 … +60		+5 … +60		+5 … +60		+1 … +60
Temperature of medium with pressure sensor AD…	[°C]	0 … +50		+5 … +50		+5 … +50		+1 … +50
Storage temperature	[°C]	–10 … +60		–10 … +60		–10 … +60		+1 … +60
Corrosion resistance class	CRC[1]	2						

1) Corrosion resistance class 2 as per Festo standard 940 070
Components subject to moderate corrosion stress. Externally visible parts with primarily decorative surface requirements which are in direct contact with a normal industrial environment or media such as coolants or lubricating agents.

Weight [g]				
Size	MS4		MS6	
Rotary knob	Without integrated lock E11	With integrated lock E11	Without integrated lock E11	With integrated lock E11
Filter regulator with plastic bowl guard R	275	400	875	1,145
Filter regulator with metal bowl U	475	600	1,087	1,627
Filter regulator with metal bowl U and fully automatic condensate drain, electrically actuated E2/E3/E4	–	–	1,800	2,070

Materials

Sectional view

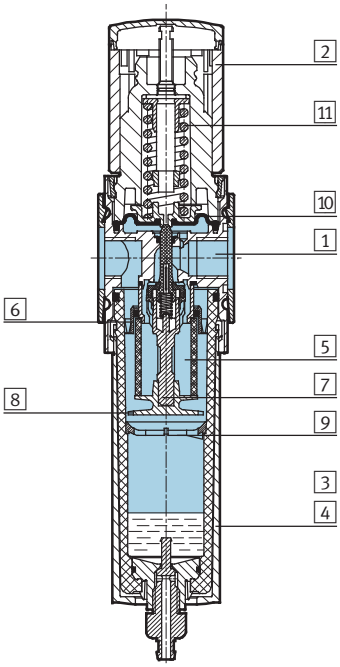

Filter regulator		
1	Housing	Die-cast aluminium
2	Rotary knob	PA/POM
	Rotary knob with integrated lock E11	Aluminium
3	Plastic bowl guard	PC
4	Metal bowl	Wrought aluminium alloy, die-cast aluminium
	Inspection window	PA
5	Filter element	PE
6	Spin disc	POM
7	Filter holder	POM
8	Separating plate	POM
9	Stabilising disc	POM
10	Diaphragm	NBR
11	Spring	Steel
–	Seals	NBR
Note on materials		RoHS-compliant (not with variant E2, E3 or E4)
		Free of copper and PTFE only with cover plate VS

Standard flow rate qn as a function of output pressure p2

Pressure regulation range D6 or D7

MS4-LFR-⅛

Input pressure p1 = 10 bar

Grade of filtration 5 µm

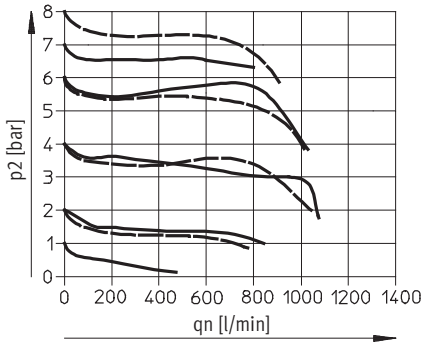

Grade of filtration 40 µm

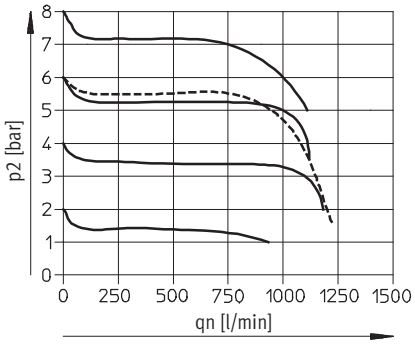

D6: 0.3 ... 7 bar

D7: 0.5 ... 12 bar

MS4-LFR-¼

Input pressure p1 = 10 bar

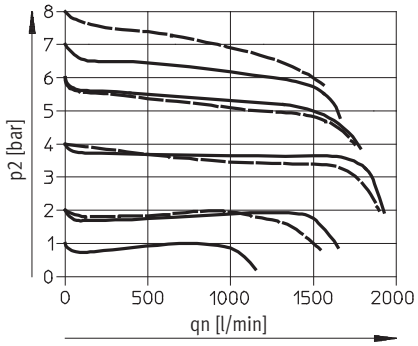

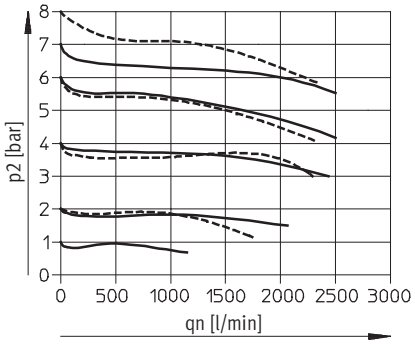

D6: 0.3 ... 7 bar

D7: 0.5 ... 12 bar

Standard flow rate qn as a function of output pressure p2

Pressure regulation range D6 or D7

Grade of filtration 5 µm

Grade of filtration 40 µm

MS6-LFR-¼

Input pressure p1 = 10 bar

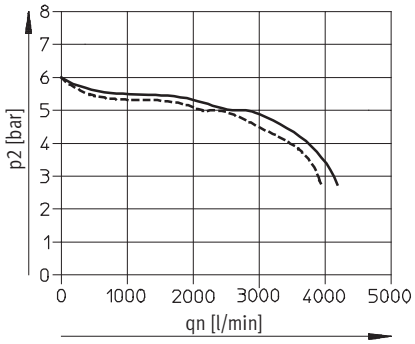

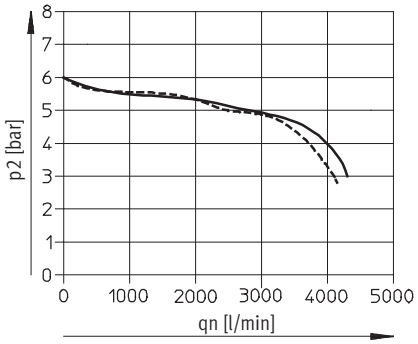

——— D6: 0.3 ... 7 bar

- - - - D7: 0.5 ... 12 bar

MS6-LFR-⅜

Input pressure p1 = 10 bar

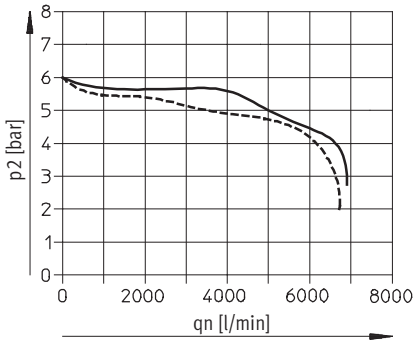

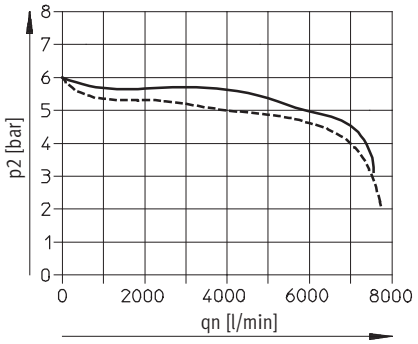

——— D6: 0.3 ... 7 bar

- - - - D7: 0.5 ... 12 bar

MS6-LFR-½

Input pressure p1 = 10 bar

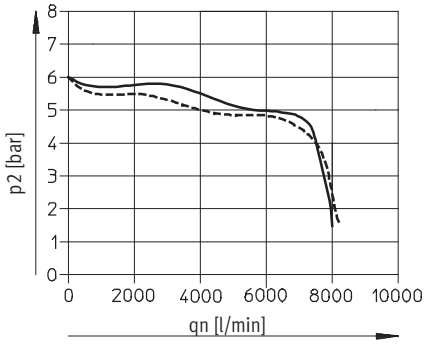

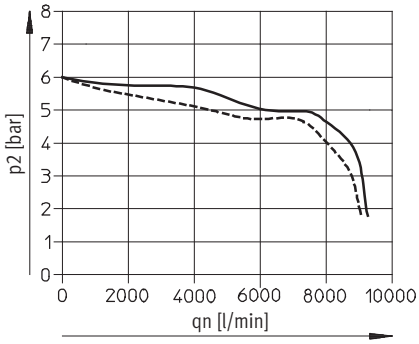

——— D6: 0.3 ... 7 bar

- - - - D7: 0.5 ... 12 bar

Dimensions – Standard Download CAD Data ➔ **www.festo.com/us/cad**

Integrated pressure gauge, display unit [bar], standard rotary knob with detent, manual rotary condensate drain

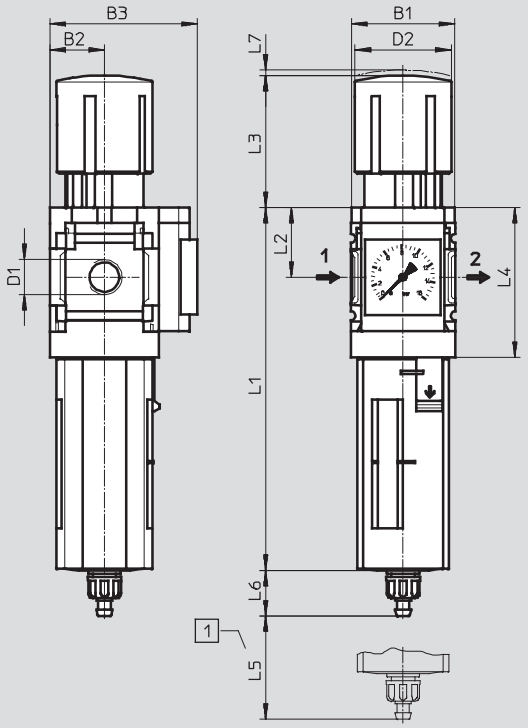

1 Installation dimensions

➔ Flow direction

Type	B1	B2	B3 Pressure gauge		D1	D2	L1 Bowl guard		L2	L3	L4	L5	L6 Bowl guard		L7
			Standard scale	Red-green scale			Plastic	Metal					Plastic	Metal	
MS4-LFR-⅛	40	21	57	58.5	G⅛	37.2	140.6	158.2	27	51.1	58.5	25	17.7	17.7	2
MS4-LFR-¼					G¼										
MS6-LFR-¼	62	31	77	78.5	G¼	51	189	194.4	39	86	84	68	15.8	19	5
MS6-LFR-⅜					G⅜										
MS6-LFR-½					G½										

Note: This product conforms to ISO 1179-1 and ISO 228-1

Dimensions – Pressure gauge alternatives Download CAD Data ➔ **www.festo.com/us/cad**

Cover plate VS

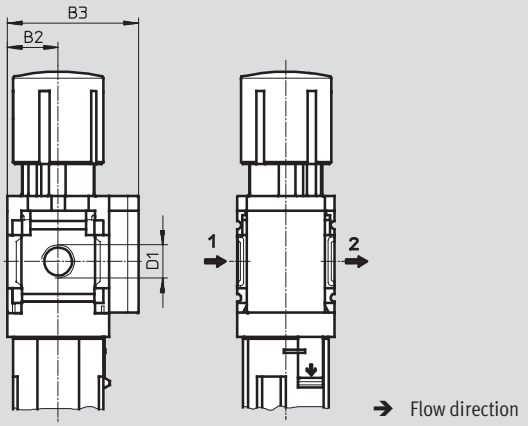

Adapter plate A8/A4 for EN pressure gauge ⅛/¼, without pressure gauge

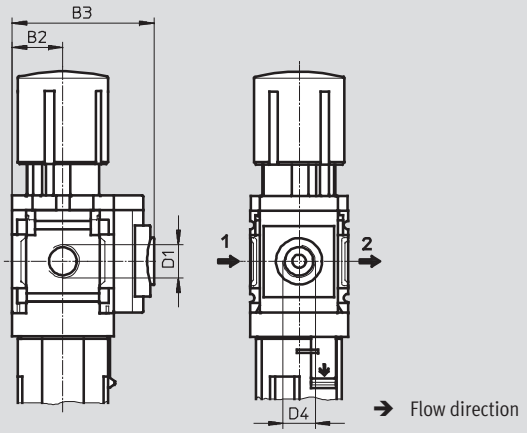

Type	B2	B3	D1	D4
MS4-LFR-⅛-...-VS	21	54	G⅛	–
MS4-LFR-¼-...-VS			G¼	
MS4-LFR-⅛-...-A8	21	58.5	G⅛	G⅛
MS4-LFR-¼-...-A8			G¼	
MS4-LFR-⅛-...-A4	21	58.5	G⅛	G¼
MS4-LFR-¼-...-A4			G¼	
MS6-LFR-¼-...-VS	31	76	G¼	–
MS6-LFR-⅜-...-VS			G⅜	
MS6-LFR-½-...-VS			G½	
MS6-LFR-¼-...-A4	31	78.5	G¼	G¼
MS6-LFR-⅜-...-A4			G⅜	
MS6-LFR-½-...-A4			G½	

Note: This product conforms to ISO 1179-1 and ISO 228-1

Dimensions – Pressure gauge alternatives Download CAD Data ➔ **www.festo.com/us/cad**

Pressure sensor with LCD display AD1 ... AD4 Technical data ➔ Internet: sde1

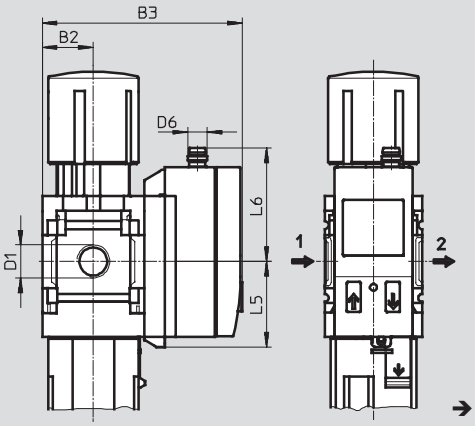

➔ Flow direction

Variant AD1:
SDE1-D10-G2-MS-L-P1-M8 with 3-pin plug M8x1, 1 switching output PNP

Variant AD2:
SDE1-D10-G2-MS-L-N1-M8 with 3-pin plug M8x1, 1 switching output NPN

Variant AD3:
SDE1-D10-G2-MS-L-PI-M12 with 4-pin plug M12x1, 1 switching output PNP and 4 ... 20 mA analogue

Variant AD4:
SDE1-D10-G2-MS-L-NI-M12 with 4-pin plug M12x1, 1 switching output NPN and 4 ... 20 mA analogue

Pressure sensor without LCD display (operational status indicator only) AD7 ... AD10 Technical data ➔ Internet: sde5

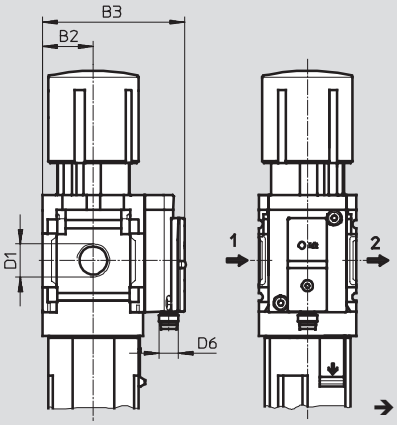

➔ Flow direction

Variant AD7:
SDE5-D10-O-...-P-M8 with 3-pin plug M8x1, threshold value comparator, 1 switching output PNP, N/O contact

Variant AD8:
SDE5-D10-C-...-P-M8 with 3-pin plug M8x1, threshold value comparator, 1 switching output PNP, N/C contact

Variant AD9:
SDE5-D10-O3-...-P-M8 with 3-pin plug M8x1, window comparator, 1 switching output PNP, N/O contact

Variant AD10:
SDE5-D10-C3-...-P-M8 with 3-pin plug M8x1, window comparator, 1 switching output PNP, N/C contact

Type	B2	B3	D1	D6	L5	L6
MS4-LFR-⅛-...-AD1/AD2	21	82.6	G⅛	M8x1	35.1	46.7
MS4-LFR-¼-...-AD1/AD2			G¼			
MS4-LFR-⅛-...-AD3/AD4	21	82.6	G⅛	M12x1	35.1	55.8
MS4-LFR-¼-...-AD3/AD4			G¼			
MS4-LFR-⅛-...-AD7/AD8/AD9/AD10	21	59.1	G⅛	M8x1	–	–
MS4-LFR-¼-...-AD7/AD8/AD9/AD10			G¼			
MS6-LFR-¼-...-AD1/AD2	31	103	G¼	M8x1	35.1	46.7
MS6-LFR-⅜-...-AD1/AD2			G⅜			
MS6-LFR-½-...-AD1/AD2			G½			
MS6-LFR-¼-...-AD3/AD4	31	103	G¼	M12x1	35.1	55.8
MS6-LFR-⅜-...-AD3/AD4			G⅜			
MS6-LFR-½-...-AD3/AD4			G½			
MS6-LFR-¼-...-AD7/AD8/AD9/AD10	31	79	G¼	M8x1	–	–
MS6-LFR-⅜-...-AD7/AD8/AD9/AD10			G⅜			
MS6-LFR-½-...-AD7/AD8/AD9/AD10			G½			

Note: This product conforms to ISO 1179-1 and ISO 228-1

Dimensions – Rotary knob Download CAD Data ➔ **www.festo.com/us/cad**

For installation into control panel

Standard rotary knob with detent

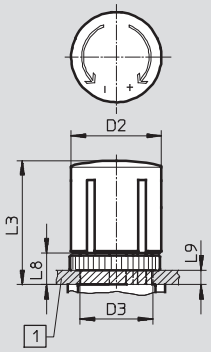

Standard rotary knob with detent, lockable via accessories AS

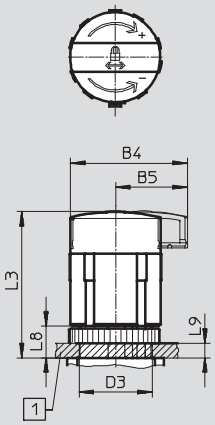

Rotary knob with integrated lock E11

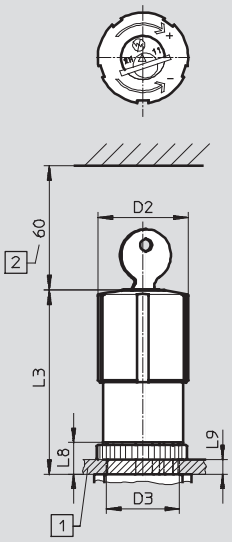

1 Max. control panel thickness
2 Installation dimensions

Long rotary knob with detent LD

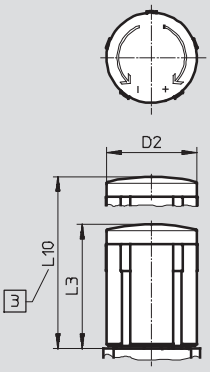

Long rotary knob with detent, lockable via accessories LD-AS

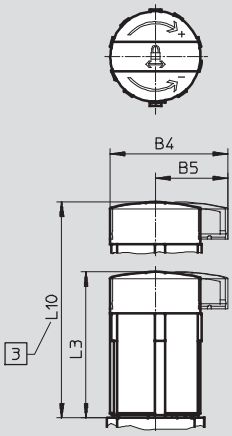

3 For pressure adjustment: pull out telescopic rotary knob fully

Type	B4	B5	D2	D3 +1	L3	L8	L9	L10
MS4-LFR-...	–	–	37.2	30	51.1	13	6	–
MS4-LFR-...-AS	48.3	29.7			60.2			
MS4-LFR-...-E11	–	–			76			
MS4-LFR-...-LD	–	–	37.2	–	51.1	–	–	76.8
MS4-LFR-...-LD-AS	48.3	29.7			60.2			85.7
MS6-LFR-...	–	–	51	44	86	22	14	–
MS6-LFR-...-AS	64.4	39			95.5			
MS6-LFR-...-E11	–	–	51.8		112.1			
MS6-LFR-...-LD	–	–	51	–	86	–	–	139
MS6-LFR-...-LD-AS	64.4	39			95.5			148.5

Dimensions – Condensate drain

Download CAD Data ➔ **www.festo.com/us/cad**

Manual rotary M

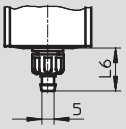

Barbed fitting for plastic tubing PCN-4

Type	L6
Plastic bowl guard	
MS4-LFR-...-M	17.7
MS6-LFR-...-M	15.8
Metal bowl	
MS4-LFR-...-M	17.7
MS6-LFR-...-M	19

Semi-automatic H

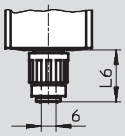

QS fitting for plastic tubing PUN-6/PAN-6

Type	L6
Plastic bowl guard	
MS4-LFR-...-H	22.1
MS6-LFR-...-H	20.2
Metal bowl	
MS4-LFR-...-H	22.1
MS6-LFR-...-H	22.8

Fully automatic V

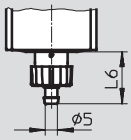

Barbed fitting for plastic tubing PCN-4

Type	L6
Plastic bowl guard	
MS4-LFR-...-V	20.4
MS6-LFR-...-V	18.5
Metal bowl	
MS4-LFR-...-V	20.4
MS6-LFR-...-V	22

Fully automatic, electrically actuated E2/E3/E4

Technical data ➔ Internet: pwea

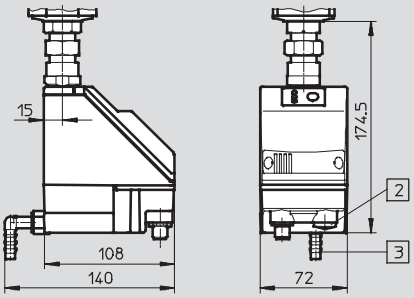

Condensate drain PWEA:

2 Electrical connection: Screw terminal PG9

3 Connection 360° rotatable for plastic tubing PUN-H-12x2

Ordering data						
Pressure regulation range 0.3 … 7 bar, integrated pressure gauge, display unit [bar], standard rotary knob with detent, lockable via accessories						
Size	Condensate drain	Connection	Grade of filtration 5 µm		Grade of filtration 40 µm	
			Part No.	Type	Part No.	Type
Plastic bowl guard						
MS4	Manual rotary	G⅛	529160	MS4-LFR-⅛-D6-CRM-AS	529164	MS4-LFR-⅛-D6-ERM-AS
		G¼	529144	MS4-LFR-¼-D6-CRM-AS	529148	MS4-LFR-¼-D6-ERM-AS
	Fully automatic	G⅛	529162	MS4-LFR-⅛-D6-CRV-AS	529166	MS4-LFR-⅛-D6-ERV-AS
		G¼	529146	MS4-LFR-¼-D6-CRV-AS	529150	MS4-LFR-¼-D6-ERV-AS
MS6	Manual rotary	G¼	529196	MS6-LFR-¼-D6-CRM-AS	529200	MS6-LFR-¼-D6-ERM-AS
		G⅜	529216	MS6-LFR-⅜-D6-CRM-AS	529220	MS6-LFR-⅜-D6-ERM-AS
		G½	529176	MS6-LFR-½-D6-CRM-AS	529180	MS6-LFR-½-D6-ERM-AS
	Fully automatic	G¼	529198	MS6-LFR-¼-D6-CRV-AS	529202	MS6-LFR-¼-D6-ERV-AS
		G⅜	529218	MS6-LFR-⅜-D6-CRV-AS	529222	MS6-LFR-⅜-D6-ERV-AS
		G½	529178	MS6-LFR-½-D6-CRV-AS	529182	MS6-LFR-½-D6-ERV-AS

Ordering data						
Pressure regulation range 0.5 … 12 bar, integrated pressure gauge, display unit [bar], standard rotary knob with detent, lockable via accessories						
Size	Condensate drain	Connection	Grade of filtration 5 µm		Grade of filtration 40 µm	
			Part No.	Type	Part No.	Type
Plastic bowl guard						
MS4	Manual rotary	G⅛	529168	MS4-LFR-⅛-D7-CRM-AS	529172	MS4-LFR-⅛-D7-ERM-AS
		G¼	529152	MS4-LFR-¼-D7-CRM-AS	529156	MS4-LFR-¼-D7-ERM-AS
	Fully automatic	G⅛	529170	MS4-LFR-⅛-D7-CRV-AS	529174	MS4-LFR-⅛-D7-ERV-AS
		G¼	529154	MS4-LFR-¼-D7-CRV-AS	529158	MS4-LFR-¼-D7-ERV-AS
MS6	Manual rotary	G¼	529204	MS6-LFR-¼-D7-CRM-AS	529208	MS6-LFR-¼-D7-ERM-AS
		G⅜	529224	MS6-LFR-⅜-D7-CRM-AS	529228	MS6-LFR-⅜-D7-ERM-AS
		G½	529184	MS6-LFR-½-D7-CRM-AS	529188	MS6-LFR-½-D7-ERM-AS
	Fully automatic	G¼	529206	MS6-LFR-¼-D7-CRV-AS	529210	MS6-LFR-¼-D7-ERV-AS
		G⅜	529226	MS6-LFR-⅜-D7-CRV-AS	529230	MS6-LFR-⅜-D7-ERV-AS
		G½	529186	MS6-LFR-½-D7-CRV-AS	529190	MS6-LFR-½-D7-ERV-AS
Integrated as metal bowl						
MS4	Manual rotary	G⅛	535702	MS4-LFR-⅛-D7-CUM-AS	535708	MS4-LFR-⅛-D7-EUM-AS
		G¼	535718	MS4-LFR-¼-D7-CUM-AS	535724	MS4-LFR-¼-D7-EUM-AS
	Fully automatic	G⅛	535704	MS4-LFR-⅛-D7-CUV-AS	535706	MS4-LFR-⅛-D7-EUV-AS
		G¼	535720	MS4-LFR-¼-D7-CUV-AS	535722	MS4-LFR-¼-D7-EUV-AS
MS6	Manual rotary	G¼	530342	MS6-LFR-¼-D7-CUM-AS	529212	MS6-LFR-¼-D7-EUM-AS
		G⅜	530346	MS6-LFR-⅜-D7-CUM-AS	529232	MS6-LFR-⅜-D7-EUM-AS
		G½	530338	MS6-LFR-½-D7-CUM-AS	529192	MS6-LFR-½-D7-EUM-AS
	Fully automatic	G¼	530344	MS6-LFR-¼-D7-CUV-AS	529214	MS6-LFR-¼-D7-EUV-AS
		G⅜	530348	MS6-LFR-⅜-D7-CUV-AS	529234	MS6-LFR-⅜-D7-EUV-AS
		G½	530340	MS6-LFR-½-D7-CUV-AS	529194	MS6-LFR-½-D7-EUV-AS

Ordering data – Wearing parts kits		
Size	Part No.	Type
MS4	673647	MS4-LFR
MS6	673648	MS6-LFR

Filter regulators MS4/MS6-LFR, MS series

Ordering data – Modular products

FESTO

M Mandatory data ➔

Module No.	Series	Size		Function		Connection size		Pressure regulation range		Grade of filtration		Bowl		Condensate drain
526489 526490	MS	4, 6		LFR		⅛, ¼, ⅜, ½, AGA, AGB, AGC, AGD, AGE		D5, D6, D7, D8		E, C		R, U		M, H, V, E2, E3, E4
Order example														
526489	**MS**	**4**	–	**LFR**	–	**AGA**	–	**D6**	–	**C**	–	**R**	–	**M**

Ordering table

Grid dimension [mm]		40	62	Conditions	Code		Enter code
M	Module No.	**526489**	**526490**				
	Series	Standard			**MS**		MS
	Size	4	6		**...**		
	Function	Filter regulator			**-LFR**		-LFR
	Connection size	Thread G⅛	–		**-⅛**		
		Thread G¼	Thread G¼		**-¼**		
		–	Thread G⅜		**-⅜**		
		–	Thread G½		**-½**		
		Connecting plate G⅛	–		**-AGA**		
		Connecting plate G¼	Connecting plate G¼		**-AGB**		
		Connecting plate G⅜	Connecting plate G⅜		**-AGC**		
		–	Connecting plate G½		**-AGD**		
		–	Connecting plate G¾		**-AGE**		
	Pressure regulation range	0.3 ... 4 bar			**-D5**		
		0.3 ... 7 bar			**-D6**		
		0.5 ... 12 bar			**-D7**		
		–	0.5 ... 16 bar		**-D8**		
	Grade of filtration	40 µm			**-E**		
		5 µm			**-C**		
	Bowl	Plastic bowl with plastic bowl guard			**-R**		
		Metal bowl			**-U**		
	Condensate drain	Manual			**-M**		
		Semi-automatic (P1 max. 12 bar)		1	**-H**		
		Fully automatic (P1 max. 12 bar)		1	**-V**		
	External, fully automatic, electrical	–	110 V AC, terminals	2	**-E2**		
		–	230 V AC, terminals	2	**-E3**		
		–	24 V DC, terminals	2	**-E4**		

1 **H, V** Not with pressure regulation range D8

2 **E2, E3, E4** Only with metal bowl U

Transfer order code

	MS		–	**LFR**	–		–		–		–		–	

Filter regulators MS4/MS6-LFR, MS series

Ordering data – Modular products

FESTO

➔ 0 **Options**

Pressure gauge alternatives	Alternative pressure gauge scale	Secondary venting	Rotary knob	Security	Type of mounting	Alternative flow direction
VS, A8, A4, RG, AD1 … AD4, AD7 … AD10	PSI, MPA	OS	LD	AS, E11	WR, WP, WPM, WB, WBM	Z
– **A8**	–	–	– **LD**	– **AS**	– **WPM**	– **Z**

Ordering table

Grid dimension [mm]		40	62	Conditions	Code		Enter code
0	Pressure gauge alternatives	Cover plate			**-VS**		
		Adapter plate for EN pressure gauge ⅛, without pressure gauge	–		**-A8**		
		Adapter plate for EN pressure gauge ¼, without pressure gauge			**-A4**		
		Integrated pressure gauge, red-green scale		4	**-RG**		
		Pressure sensor with display, plug M8, 1 switching output PNP, 3-pin		5	**-AD1**		
		Pressure sensor with display, plug M8, 1 switching output NPN, 3-pin		5	**-AD2**		
		Pressure sensor with display, plug M12, 1 switching output PNP, 4-pin, analogue output 4 … 20 mA		5	**-AD3**		
		Pressure sensor with display, plug M12, 1 switching output NPN, 4-pin, analogue output 4 … 20 mA		5	**-AD4**		
		Pressure sensor without display, plug M8, threshold value comparator, PNP, N/O contact		5	**-AD7**		
		Pressure sensor without display, plug M8, threshold value comparator, PNP, N/C contact		5	**-AD8**		
		Pressure sensor without display, plug M8, window comparator, PNP, N/O contact		5	**-AD9**		
		Pressure sensor without display, plug M8, window comparator, PNP, N/C contact		5	**-AD10**		
	Alternative pressure gauge scale	psi		6	**-PSI**		
		MPa		6	**-MPA**		
	Secondary venting	Without secondary venting			**-OS**		
	Rotary knob	Long rotary knob		7	**-LD**		
	Security	Lockable via accessories			**-AS**		
		With integrated lock			**-E11**		
	Type of mounting	Mounting bracket with knurled nut for regulator head		8	**-WR**		
		Mounting bracket		9	**-WP**		
		Mounting bracket		9	**-WPM**		
		Mounting bracket			**-WB**		
		Mounting bracket	–		**-WBM**		
	Alternative flow direction	Flow direction from right to left			**-Z**		

4 **RG** Alternative pressure gauge scale PSI serves only as an auxiliary scale

5 **AD1 … AD4, AD7 … AD10**
Measuring range max. 10 bar
Not with pressure regulation range D8

6 **PSI, MPA** Not with pressure gauge alternatives VS, A8, A4, AD1 … AD4, AD7 … AD10

7 **LD** Not with security E11

8 **WR** Not with long rotary knob LD

9 **WP, WPM** Only with connecting plate AGA, AGB, AGC, AGD or AGE

Transfer order code

– [ ] – [ ] – [ ] – [ ] – [ ] – [ ] – [ ]

Filter regulators MS9-LFR, MS series

Peripherals overview

FESTO

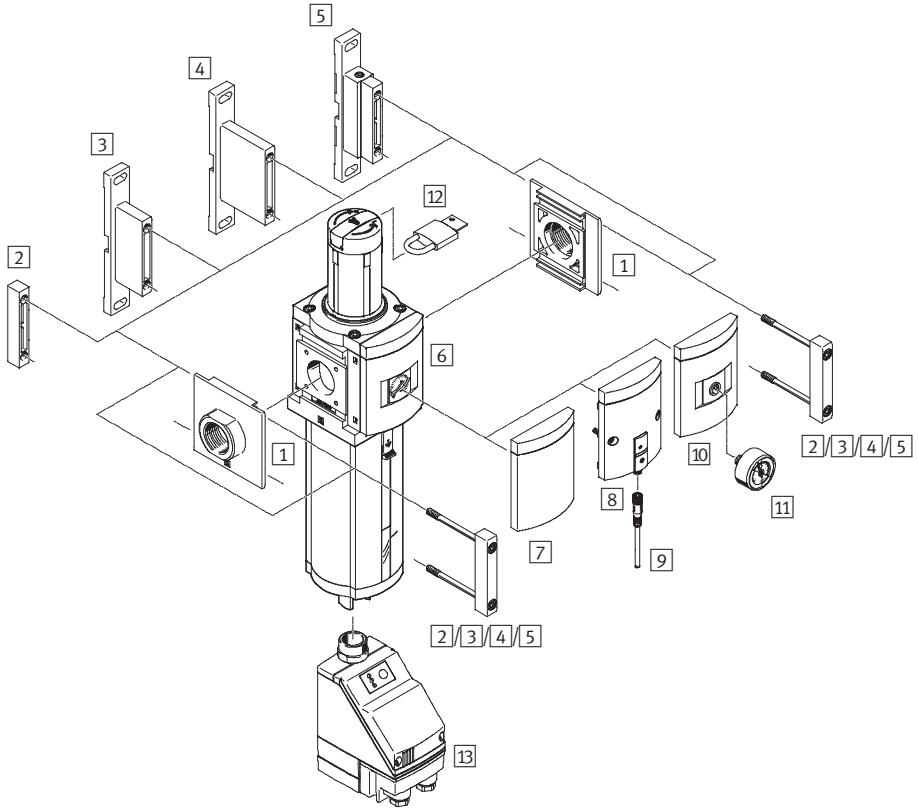

Note

Additional accessories:
- Module connector for combinations with size MS6, MS9 or MS12 ➔ Internet: rmv, armv

Mounting attachments and accessories		Individual unit			Combination	➔ Page/ Internet
		With female thread ¾ or 1	With connecting plate AG...		Module without connecting thread, without connecting plate G	
			Without EU certification EX4	With EU certification EX4		
1	Connecting plate MS9-AG...	–	■	■	■	ms9-ag
2	Module connector MS9-MV	–	–	–	■	ms9-mv
3	Mounting bracket MS9-WP	■	■	■	■	ms9-wp
4	Mounting bracket MS9-WPB	■	■	■	■	ms9-wp
5	Mounting bracket MS9-WPM	■	■	–	■	ms9-wp
6	MS pressure gauge AG	■	■	■	■	35
7	Cover plate VS	■	■	■	■	35
8	Pressure sensor without display AD7 ... AD10	■	■	–	■	35
9	Connecting cable NEBU-M8...-LE3	■	■	–	■	48
10	Adapter plate for EN pressure gauge ¼ A4	■	■	■	■	35
11	Pressure gauge MA	■	■	■	■	48
12	Padlock LRVS-D	■	■	■	■	48

13	Condensate drain, fully automatic, electrically actuated E2/E3/E4	■	■	–	■	35

Filter regulators MS9-LFR, MS series

Type codes

MS	9	–	LFR	–	G	–	D6	–	E	U	M	–	DI	–	AG	–	BAR	–	AS

Series	
MS	Standard service unit

Size	
9	Grid dimension 90 mm

Service function	
LFR	Filter regulator

Connection size	
G	Module without connecting thread, without connecting plate

Pressure regulation range/operation mode	
D6	0.5 ... 7 bar, manually operated
D7	0.5 ... 12 bar, manually operated

Grade of filtration	
C	5 µm
E	40 µm

Bowl guard	
U	Integrated as metal bowl

Condensate drain	
M	Manual rotary
V	Fully automatic

Regulator type	
	Piloted
DI	Directly actuated (only with pressure regulation range D6)

Pressure gauge	
AG	MS pressure gauge

Pressure gauge scale	
BAR	Bar

Security	
AS	Rotary knob with detent, can be locked using accessories

Additional variants can be ordered using the modular system ➔ 35

- Connecting plates
- Pressure regulation range
- Condensate drain
- Pressure gauge alternatives
- Alternative pressure gauge scale
- Secondary venting
- Security lock
- Type of mounting
- EU certification
- UL certification
- Alternative flow direction

Filter regulators MS9-LFR, MS series

Technical data

FESTO

Manual rotary condensate drain, with pressure gauge

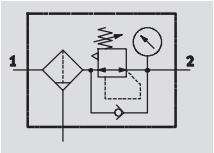

Semi or fully automatic condensate drain, with pressure gauge

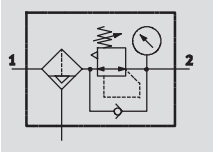

With this component, the filter and pressure regulator are combined into a single unit. The sintered filter with water separator removes contamination, pipe sinter, rust and condensate from the compressed air.

Flow rate
8,000 … 23,000 l/min
Temperature range
–10 … +60 °C
Pressure
1 … 20 bar

- Good regulation characteristics with low hysteresis and primary pressure compensation
- Good particle and condensate separation
- Piloted or directly actuated filter-diaphragm regulator
- High flow rates
- Available with or without secondary venting
- Four pressure regulation ranges: 0.5 … 4 bar, 0.5 … 7 bar, 0.5 … 12 bar and 0.5 … 16 bar
- Pressure gauge connection for different fitting options
- Available with manual, semi-automatic, fully automatic or fully automatic, electrically actuated condensate drain
- Actuator lock to protect set values against adjustment
- Optional pressure sensor
- Choice of filter cartridges: 5 µm or 40 µm
- New filter cartridges ➔ 47
- Optional device variant EX4 for use in potentially explosive areas in zones 1, 2, 21 and 22

General technical data					
Pneumatic connection 1, 2		G¾	G1	G1½ … G1½ (with connecting plate AG…)	– (without connecting thread G)
Design		Piloted filter-diaphragm regulator			
		Directly actuated filter-diaphragm regulator			
Regulator type	Piloted	Output pressure constant, with return flow action, with primary pressure compensation, with secondary venting			
	Directly actuated	Output pressure constant, with return flow action, with/without secondary venting			
Type of mounting		Via accessories			
		In-line installation			
Mounting position		Vertical ±5°			
Grade of filtration [µm]		5 (air purity class at the output: compressed air in accordance with ISO 8573-1:2010 [6:4:4])			
		40 (air purity class at the output: compressed air in accordance with ISO 8573-1:2010 [7:4:4])			
Bowl guard		Integrated as metal bowl			
Condensate drain		Manual rotary			
		Semi-automatic			
		Fully automatic			
		Fully automatic, electrically actuated			
Security		Rotary knob with detent			
		Rotary knob with detent, can be locked using accessories			
		Rotary knob with integrated lock			
Pressure regulation range/operation mode	D5 [bar]	0.5 … 4, manually operated			
	D6 [bar]	0.5 … 7, manually operated			
	D7 [bar]	0.5 … 12, manually operated (0.5 … 10 with pressure sensor variant AD…)			
	D8 [bar]	0.5 … 16, manually operated (0.5 … 10 with pressure sensor variant AD…)			
Max. pressure hysteresis [bar]		0.4			
Pressure display		Via pressure sensor for displaying output pressure via operational status indicator and electrical output			
		Via pressure gauge for displaying output pressure			
		Via pressure gauge with red/green scale for displaying output pressure			
		G¼ prepared			
Max. condensate volume [ml]		220			

Note: This product conforms to ISO 1179-1 and ISO 228-1

Filter regulators MS9-LFR, MS series

Technical data

FESTO

Standard nominal flow rate qnN[1] [l/min]					
Design		Piloted filter-diaphragm regulator		Directly actuated filter-diaphragm regulator DI	
Pneumatic connection		G¾	G1	G¾	G1
D5 – Pressure regulation range 0.5 … 4 bar					
Grade of filtration	5 µm	16,000 ±15%[2]	20,000 ±15%[2]	8,000 ±15%[2]	19,000 ±15%[2]
	40 µm	19,000 ±15%[2]	23,000 ±15%[2]	8,000 ±15%[2]	19,000 ±15%[2]
D6 – Pressure regulation range 0.5 … 7 bar					
Grade of filtration	5 µm	13,000 ±15%	18,000 ±15%	18,000 ±15%	13,000 ±15%
	40 µm	15,000 ±15%	20,000 ±15%	14,000 ±15%	13,000 ±15%
D7 – Pressure regulation range 0.5 … 12 bar					
Grade of filtration	5 µm	13,000 ±15%	18,000 ±15%	–	–
	40 µm	19,000 ±15%	20,000 ±15%	–	–
D8 – Pressure regulation range 0.5 … 16 bar					
Grade of filtration	5 µm	10,000 ±15%	18,000 ±15%	–	–
	40 µm	19,000 ±15%	20,000 ±15%	–	–

1) Measured at p1 = 10 bar and p2 = 6 bar, Δp = 1 bar
2) Measured at p1 = 10 bar and p2 = 4 bar, Δp = 1 bar

Operating and environmental conditions					
Condensate drain		Manual rotary M	Semi-automatic H	Fully automatic V	Fully automatic, electrically actuated E2/E3/E4
Operating pressure	[bar]	1 … 20	1.5 … 12	2 … 12	1 … 16
Operating medium		Compressed air in accordance with ISO 8573-1:2010 [–:4:–]	Compressed air in accordance with ISO 8573-1:2010 [–:4:–]	Compressed air in accordance with ISO 8573-1:2010 [7:4:–]	Compressed air in accordance with ISO 8573-1:2010 [–:4:–]
Ambient temperature	[°C]	–10 … +60	+5 … +60	+5 … +60	+1 … +60
Ambient temperature with pressure sensor AD	[°C]	0 … +50	+5 … +50	+5 … +50	+1 … +50
Temperature of medium	[°C]	–10 … +60	+5 … +60	+5 … +60	+1 … +60
Temperature of medium with pressure sensor AD	[°C]	0 … +50	+5 … +50	+5 … +50	+1 … +50
Storage temperature	[°C]	–10 … +60	+5 … +60	+5 … +60	+1 … +60
Corrosion resistance class CRC[1]		2			
Certification (variant UL1)		cULus recognized (OL)			

1) Corrosion resistance class 2 according to Festo standard 940 070
Components subject to moderate corrosion stress. Externally visible parts with primarily decorative surface requirements which are in direct contact with a normal industrial environment or media such as coolants or lubricating agents.

ATEX	
EU certification	EX4
ATEX category gas	II 2G
Ex-ignition protection type gas	c T6 X
ATEX category dust	II 2D
EX-ignition protection type dust	c 60 °C X
ATEX ambient temperature	+5 °C ≤ Ta ≤ +60 °C
CE mark (see declaration of conformity)	To EU Explosion Protection Directive (ATEX)

Weight [g]		
Rotary knob	Without integrated lock E11	With integrated lock E11
Filter regulator with metal bowl U	2,400	2,700
Filter regulator with metal bowl U and fully automatic condensate drain, electrically actuated E2/E3/E4	2,800	3,100

Filter regulators MS9-LFR, MS series

Technical data

FESTO

Materials

Sectional view

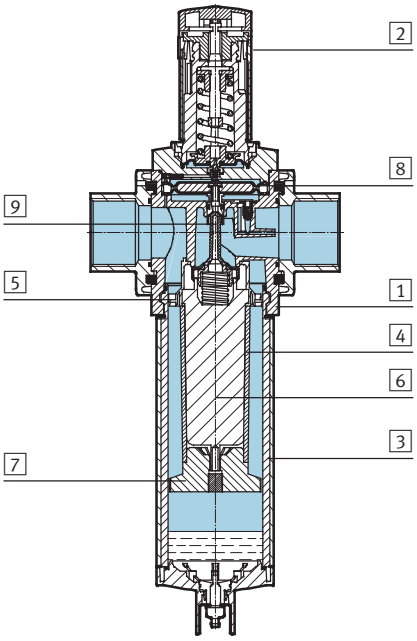

Filter regulator		
1	Housing	Die-cast aluminium
2	Rotary knob	PA
	Rotary knob with integrated lock E11	Aluminium
3	Bowl	Wrought aluminium alloy
	Inspection window	PA
4	Filter element	PE
5	Spin disc	POM
6	Filter holder	POM
7	Separating plate	POM
8	Diaphragm	NBR
9	Valve stem	Wrought aluminium alloy, NBR, POM
–	Cover	PA reinforced
–	Connecting plate, module connector, mounting bracket	Die-cast aluminium
–	Seals	NBR
Note on materials		RoHS-compliant (not with variant E2, E3 or E4)

Standard flow rate qn as a function of output pressure p2 at operating pressure p1 = 10 bar

Piloted filter-diaphragm regulator

Grade of filtration 5 µm, pneumatic connection G¾

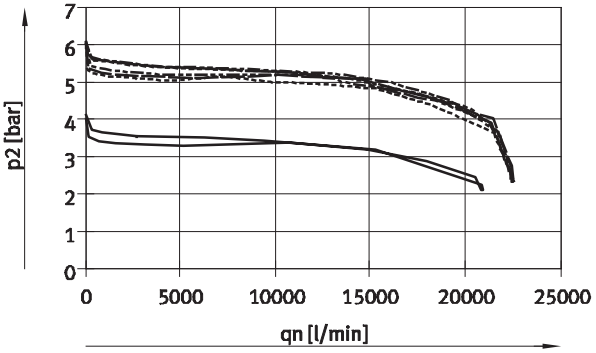

Grade of filtration 40 µm, pneumatic connection G¾

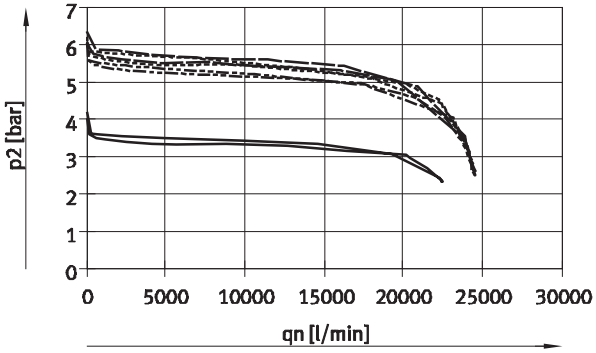

Grade of filtration 5 µm, pneumatic connection G1

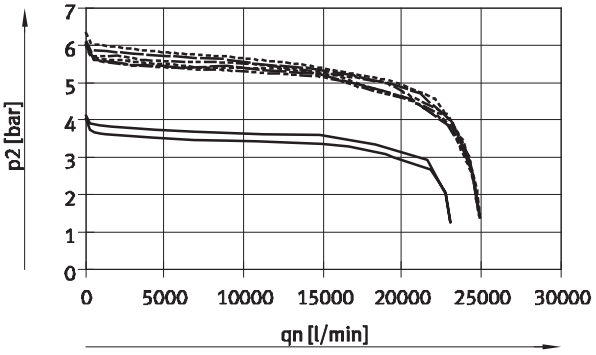

Grade of filtration 40 µm, pneumatic connection G1

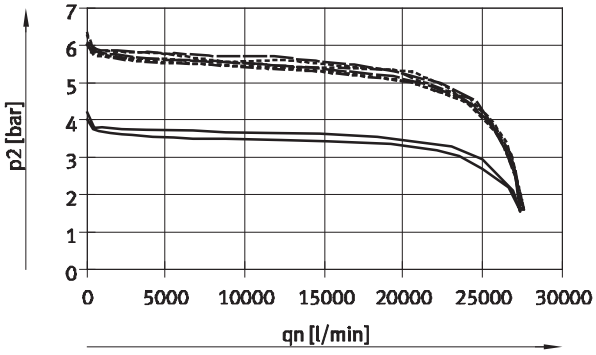

D5: 0.5 … 4 bar
D6: 0.5 … 7 bar
D7: 0.5 … 12 bar
D8: 0.5 … 16 bar

Filter regulators MS9-LFR, MS series

Technical data

Standard flow rate qn as a function of output pressure p2 at operating pressure p1 = 10 bar

Directly actuated filter-diaphragm regulator DI

Grade of filtration 5 µm, pneumatic connection G¾

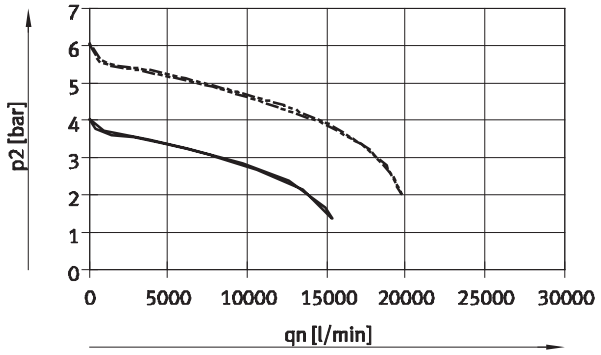

Grade of filtration 40 µm, pneumatic connection G¾

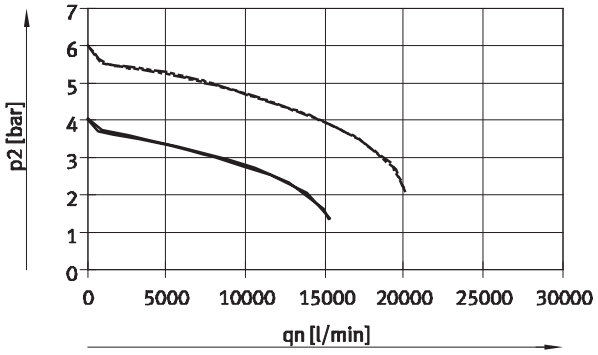

Grade of filtration 5 µm, pneumatic connection G1

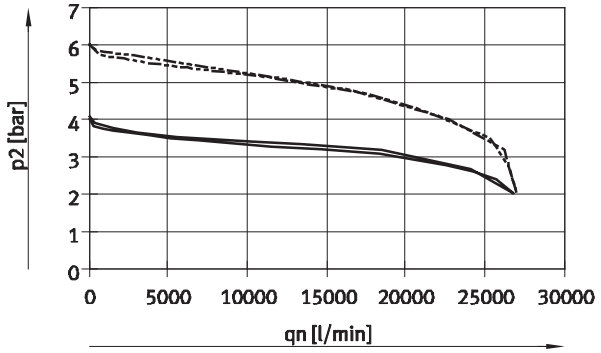

Grade of filtration 40 µm, pneumatic connection G1

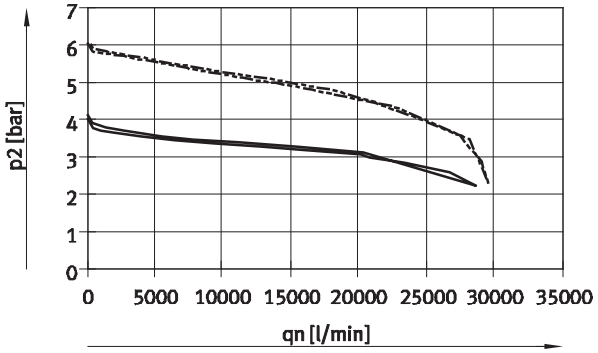

D5: 0.5 ... 4 bar

D6: 0.5 ... 7 bar

Filter regulators MS9-LFR, MS series

Technical data

FESTO

Dimensions – Basic version Download CAD Data ➔ **www.festo.com/us/cad**

Without connecting thread G, cover plate VS, rotary knob with detent

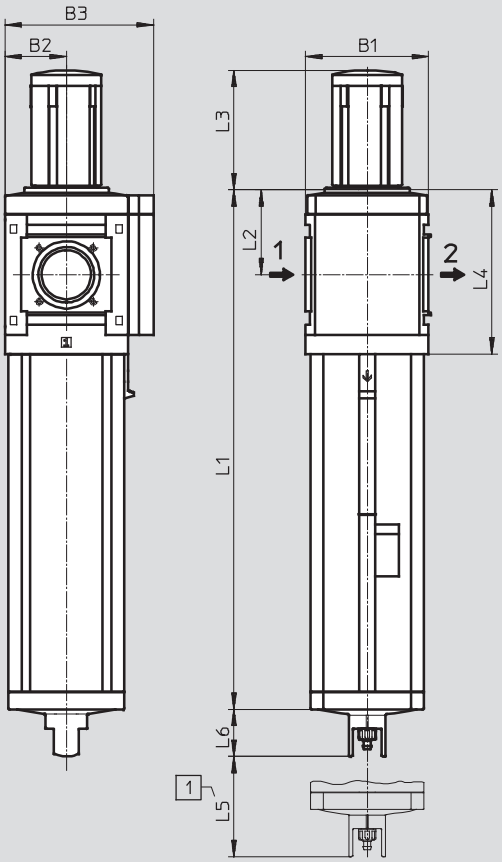

1 Installation dimensions

➔ Flow direction

Type	B1	B2	B3	L1		L2		L3	L4		L5	L6
				pilot actuated	directly actuated DI	pilot actuated	directly actuated DI		pilot actuated	directly actuated DI		
MS9-LFR-G	90	45	109	320	313	69	62	86	127	120	150	34.5

Filter regulators MS9-LFR, MS series

Technical data

FESTO

Dimensions – Connecting thread/connecting plate

Download CAD Data ➔ **www.festo.com/us/cad**

With connecting thread ¾ or 1

With connecting plate AG...

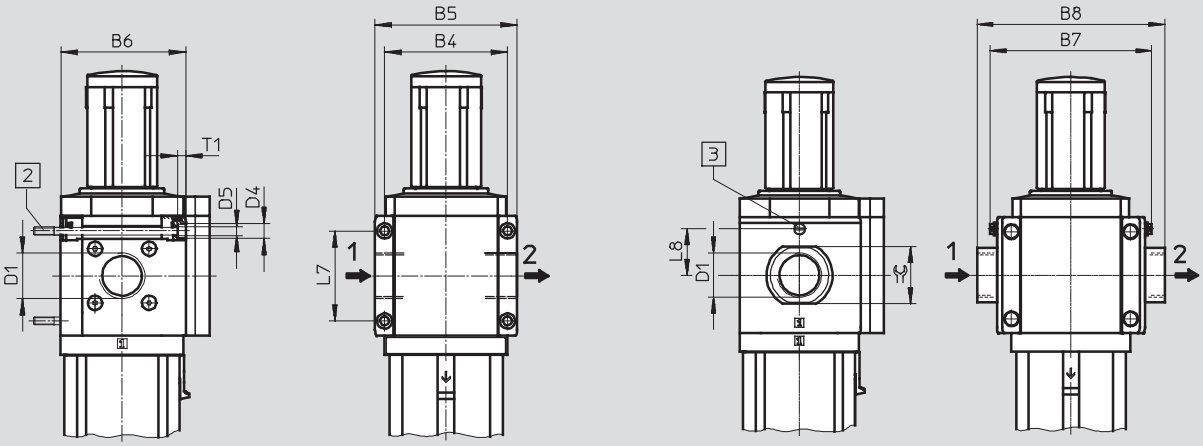

2 Mounting screw M6xmin.90 to DIN 912 (not included in the scope of delivery) for wall mounting without mounting bracket

3 Earthing screw M4x8 (only with MS9-...-EX4)

➔ Flow direction

Type	B4	B5	B6	B7		B8	D1	D4	D5	L7	L8	T1	⌀
					EX4						EX4		
MS9-LFR-¾	90	104	91.5	–	–	–	G¾	11	6.5	66	–	6	–
MS9-LFR-1							G1						
MS9-LFR-AGD	–	–	–	112	122	132	G½	–	–	–	35	–	30
MS9-LFR-AGE						132	G¾						36
MS9-LFR-AGF						142	G1						41
MS9-LFR-AGG						162	G1¼						50
MS9-LFR-AGH						176	G1½						55

Note: This product conforms to ISO 1179-1 and ISO 228-1

Dimensions – Pressure gauge alternatives

Download CAD Data ➔ **www.festo.com/us/cad**

Integrated MS pressure gauge with standard scale AG or red/green scale RG, display unit [bar]

Adapter plate A4 for EN pressure gauge ¼, without pressure gauge

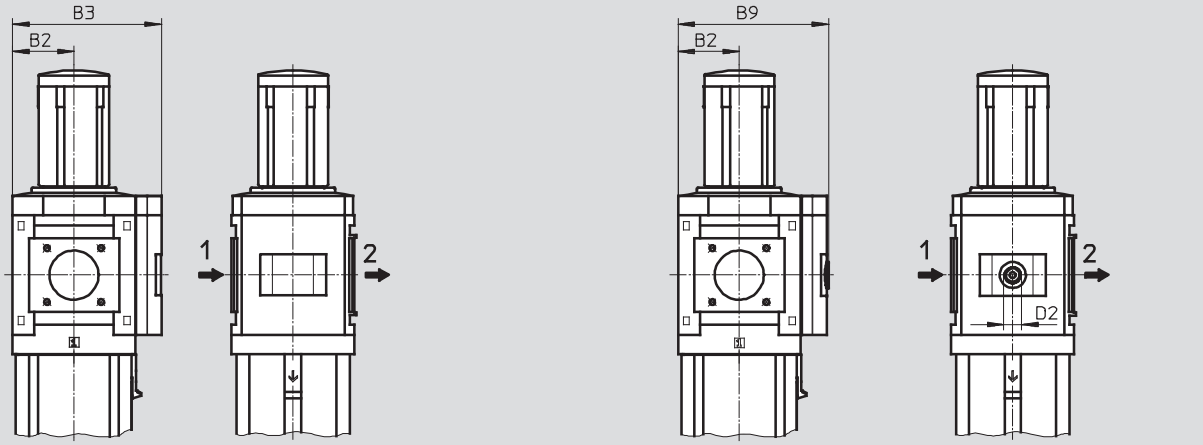

➔ Flow direction

Type	B2	B3	B9	D2
MS9-LFR-...-AG/RG	45	109	–	–
MS9-LFR-...-A4		–	110	G¼

Note: This product conforms to ISO 1179-1 and ISO 228-1

Filter regulators MS9-LFR, MS series

Technical data

FESTO

Dimensions – Pressure gauge alternatives Download CAD Data ➔ **www.festo.com/us/cad**

Pressure sensor without LCD display (operational status indicator only) AD7 ... AD10 Technical data ➔ Internet: sde5

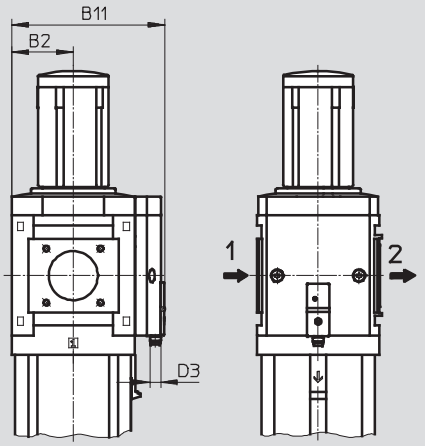

➔ Flow direction

Variant AD7:
SDE5-D10-O-...-P-M8 with 3-pin plug M8x1, threshold value comparator, 1 switching output PNP, N/O contact

Variant AD8:
SDE5-D10-C-...-P-M8 with 3-pin plug M8x1, threshold value comparator, 1 switching output PNP, N/C contact

Variant AD9:
SDE5-D10-O3-...-P-M8 with 3-pin plug M8x1, window comparator, 1 switching output PNP, N/O contact

Variant AD10:
SDE5-D10-C3-...-P-M8 with 3-pin plug M8x1, window comparator, 1 switching output PNP, N/C contact

Type	B2	B11	D3
MS9-LFR-...-AD7/AD8/AD9/AD10	45	112	M8

Dimensions – Rotary knob Download CAD Data ➔ **www.festo.com/us/cad**

Rotary knob with detent

Rotary knob with detent, can be locked using accessories AS

Rotary knob with integrated lock E11

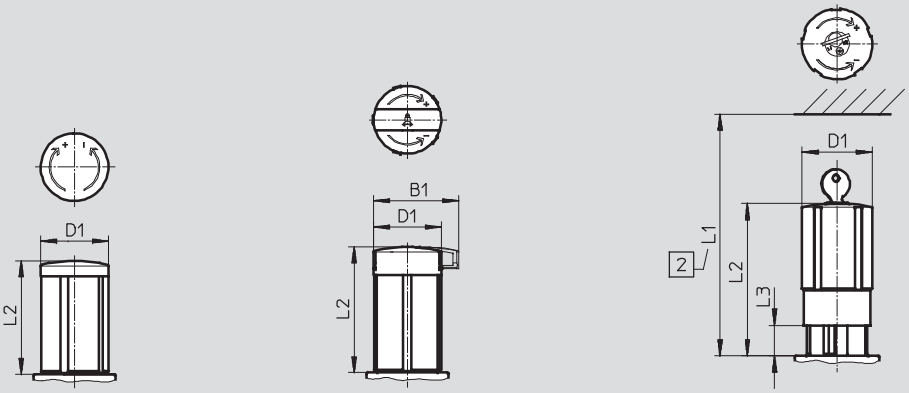

2 Installation dimensions

Type	B1	D1	L1	L2	L3
MS9-LFR	–	52	–	86	–
MS9-LFR-...-AS	65	52	–	96	–
MS9-LFR-...-E11	–	52	174	114	25

Filter regulators MS9-LFR, MS series

Technical data

FESTO

Dimensions – Condensate drain Download CAD Data ➔ **www.festo.com/us/cad**

Manual rotary M/fully automatic V

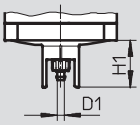

Barbed connector for plastic tubing PCN-4

Semi-automatic H

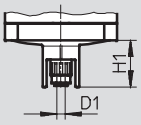

QS connector for plastic tubing PUN-6/PAN-6

Fully automatic, electrically actuated E2/E3/E4 Technical data ➔ Internet: pwea

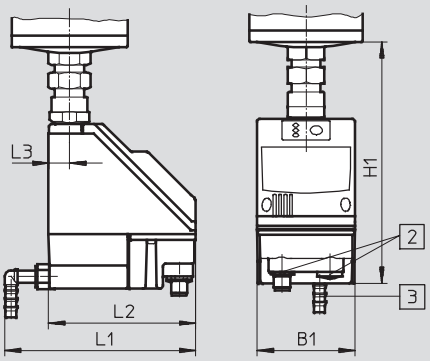

Condensate drain PWEA:

2 Electrical connection: Screw terminal PG9

3 Connection 360° rotatable for plastic tubing PUN-H-12x2

Type	B1	D1	H1	L1	L2	L3
MS9-LFR-...-M/V	–	5	34.5	–	–	–
MS9-LFR-...-H		6				
MS9-LFR-...-E2/E3/E4	72	–	178	140	108	15

Ordering data

Pressure regulation range 0.5 ... 7 bar, integrated pressure gauge, display unit [bar], rotary knob with detent, can be locked using accessories

Size	Condensate drain	Connection	Grade of filtration 5 µm		Grade of filtration 40 µm	
			Part No.	Type	Part No.	Type
Piloted filter-diaphragm regulator						
MS9	Manual rotary	–	**564114**	**MS9-LFR-G-D6-CUM-AG-BAR-AS**	**564110**	**MS9-LFR-G-D6-EUM-AG-BAR-AS**
	Fully automatic	–	**564115**	**MS9-LFR-G-D6-CUV-AG-BAR-AS**	**564111**	**MS9-LFR-G-D6-EUV-AG-BAR-AS**
Directly actuated filter-diaphragm regulator						
MS9	Manual rotary	–	**564116**	**MS9-LFR-G-D6-CUM-DI-AG-BAR-AS**	**564112**	**MS9-LFR-G-D6-EUM-DI-AG-BAR-AS**
	Fully automatic	–	**564117**	**MS9-LFR-G-D6-CUV-DI-AG-BAR-AS**	**564113**	**MS9-LFR-G-D6-EUV-DI-AG-BAR-AS**

Ordering data

Pressure regulation range 0.5 ... 12 bar, integrated pressure gauge, display unit [bar], rotary knob with detent, can be locked using accessories

Size	Condensate drain	Connection	Grade of filtration 5 µm		Grade of filtration 40 µm	
			Part No.	Type	Part No.	Type
Piloted filter-diaphragm regulator						
MS9	Manual rotary	–	**564120**	**MS9-LFR-G-D7-CUM-AG-BAR-AS**	**564118**	**MS9-LFR-G-D7-EUM-AG-BAR-AS**
	Fully automatic	–	**564121**	**MS9-LFR-G-D7-CUV-AG-BAR-AS**	**564119**	**MS9-LFR-G-D7-EUV-AG-BAR-AS**

Filter regulators MS9-LFR, MS series

Ordering data – Modular products

FESTO

M Mandatory data

Module No.	Series	Size		Function		Connection size		Pressure range/operation mode		Grade of filtration		Bowl		Condensate drain
562531	MS	9		LFR		¾, 1, AGD, AGE, AGF, AGG, AGH, G		D5, D6, D7, D8		E, C		U		M, H, V, E2, E3, E4
Ordering example														
562531	**MS**	**9**	–	**LFR**	–	**G**	–	**D5**	–	**E**	–	**U**	–	**M**

Ordering table

Grid dimension [mm]		90	Conditions	Code		Enter code
M	Module No.	**562531**				
	Series	Standard		**MS**		MS
	Size	9		**9**		9
	Function	Filter regulator		**-LFR**		-LFR
	Connection size	Thread G¾	1	**-¾**		
		Thread G1	1	**-1**		
		Connecting plate G½		**-AGD**		
		Connecting plate G¾		**-AGE**		
		Connecting plate G1		**-AGF**		
		Connecting plate G1¼		**-AGG**		
		Connecting plate G1½		**-AGH**		
		Module without connecting thread, without connecting plate	1	**-G**		
	Pressure range/operation mode	0.5 ... 4 bar, manually operated		**-D5**		
		0.5 ... 7 bar, manually operated		**-D6**		
		0.5 ... 12 bar, manually operated		**-D7**		
		0.5 ... 16 bar, manually operated	1	**-D8**		
	Grade of filtration	40 µm		**-E**		
		5 µm		**-C**		
	Bowl	Metal bowl		**-U**		-U
	Condensate drain	Manual		**-M**		
		Semi-automatic (P1 max. 12 bar)		**-H**		
		Fully automatic (P1 max. 12 bar)		**-V**		
	External, fully automatic, electric	110 V AC, terminals (P1 max. 16 bar)	1	**-E2**		
		230 V AC, terminals (P1 max. 16 bar)	1	**-E3**		
		24 V DC, terminals (P1 max. 16 bar)	1	**-E4**		

1 **¾, 1, G, D8, E2, E3, E4, AD7, AD8, AD9, AD10, E11, WPM**
Not with EU certification EX4

Transfer order code

562531	**MS**	**9**	–	**LFR**	–		–		–		–	**U**	–	

Filter regulators MS9-LFR, MS series

Ordering data – Modular products

FESTO

➔ O	M	O Options						
Regulator type	Pressure gauge/pressure gauge alternatives	Alternative pressure gauge scale	Secondary venting	Security	Type of mounting	EU certification	UL certification	Alternative flow direction
DI	AG, VS, A4, RG, AD7 … AD10	PSI, MPA, BAR	OS	AS, E11	WP, WPM, WPB	EX4	UL1	Z
– DI	– AG	– BAR	– OS	– AS	–	–	–	–

Ordering table						
Grid dimension [mm]		90	Conditions	Code		Enter code
O	Regulator type	Directly actuated	2	-DI		
M	Pressure gauge/pressure gauge alternatives	MS pressure gauge		-AG		
		Cover plate		-VS		
		Adapter plate for EN pressure gauge ¼, without pressure gauge		-A4		
		Integrated pressure gauge, red/green scale	3	-RG		
		Pressure sensor without display, plug M8, threshold value comparator, PNP, N/O contact	1 4	-AD7		
		Pressure sensor without display, plug M8, threshold value comparator, PNP, N/C contact	1 4	-AD8		
		Pressure sensor without display, plug M8, window comparator, PNP, N/O contact	1 4	-AD9		
		Pressure sensor without display, plug M8, window comparator, PNP, N/C contact	1 4	-AD10		
O	Alternative pressure gauge scale	Psi	5	-PSI		
		MPa	5	-MPA		
		Bar	5	-BAR		
	Secondary venting	Without secondary venting	6	-OS		
	Security	Can be locked using accessories		-AS		
		With integrated lock	1	-E11		
	Type of mounting	Mounting bracket	7	-WP		
		Mounting bracket	1 7	-WPM		
		Mounting bracket for large wall gap	7	-WPB		
	EU certification	II 2GD to EU Directive 94/9/EG		-EX4		
	UL certification	cULus, ordinary location for Canada and USA		-UL1		
	Alternative flow direction	Flow direction from right to left		-Z		

1 **¾, 1, G, D8, E2, E3, E4, AD7, AD8, AD9, AD10, E11, WPM**
Not with EU certification EX4
2 **DI** Not with pressure range D7, D8
3 **RG** Not with alternative pressure gauge scale PSI
PSI scale serves only as an auxiliary scale
4 **AD7 … AD10** Measuring range max. 10 bar
5 **PSI, MPA, BAR** Not with pressure gauge alternatives VS, A4, AD7, AD8, AD9, AD10
6 **OS** Only with regulator type DI
7 **WP, WPM, WPB** Not with module G

Transfer order code

–		–		–		–		–		–		–		–	

Filter regulators MS12-LFR, MS series

Peripherals overview

Filter regulators MS12-LFR

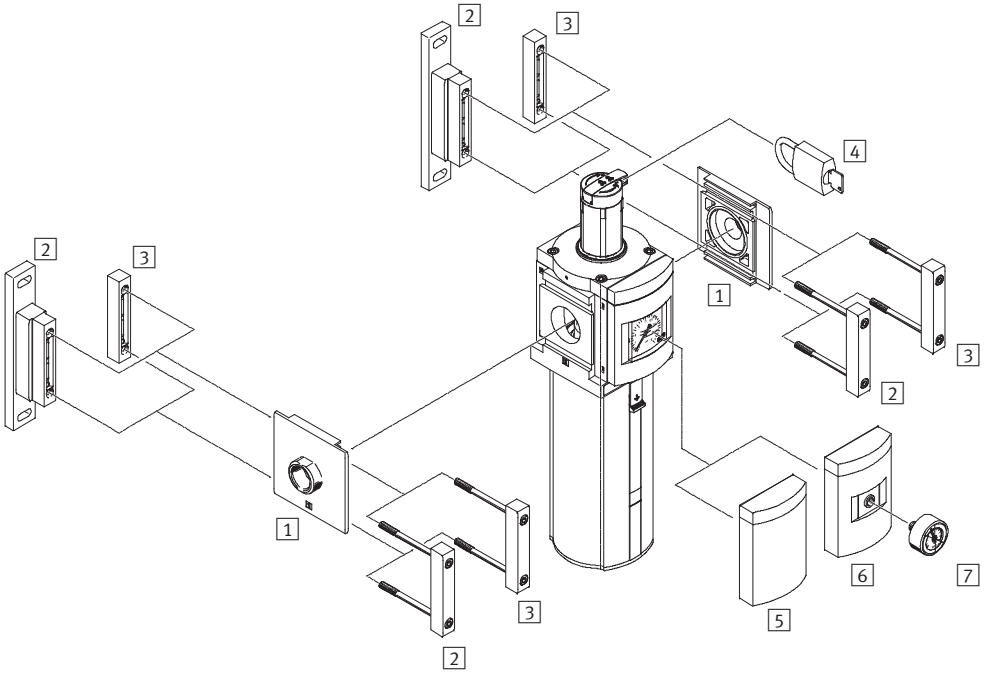

Note

Additional accessories:
- Module connector for combination with size MS9 ➔ Internet: armv

Mounting attachments and accessories		➔ Page/Internet
1	Connecting plate MS12-AG...	ms12-ag
2	Mounting bracket MS12-WP	ms12-wp
3	Module connector MS12-MV	ms12-mv
4	Padlock LRVS-D	48
5	Cover plate VS	45
6	Adapter for EN pressure gauge ¼ A4	45
7	Pressure gauge MA	48

Filter regulators MS12-LFR, MS series

Type codes

MS	12	–	LFR	–	G	–	D7	–	C	U	V	–	LD	–	AS

Series	
MS	Standard service unit

Size	
12	Grid dimension 124 mm

Service function	
LFR	Filter regulator

Connection size	
G	Module without connecting thread, without connecting plate Connecting plates ➔ Accessories

Pressure regulation range	
D7	Pressure regulation range 0.5 … 12 bar

Grade of filtration	
C	5 µm
E	40 µm

Bowl guard	
U	Integrated as metal bowl

Condensate drain	
V	Fully automatic

Rotary knob	
LD	Long rotary knob

Security	
AS	Rotary knob with detent, lockable via accessories

Further variants can be ordered using the modular system ➔ 45

- Connecting plates
- Pressure regulation range
- Condensate drain
- Pressure gauge alternatives
- Alternative pressure gauge scale
- Security
- Type of mounting
- Alternative flow direction

Filter regulators MS12-LFR, MS series

Technical data

Function
Condensate drain
manual rotary
with pressure gauge

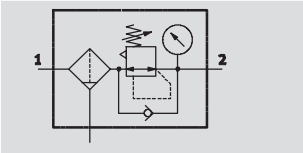

Condensate drain
fully automatic
with pressure gauge

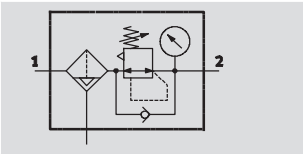

Flow rate
11,000 … 17,000 l/min
Temperature range
–10 … +60 °C
Pressure
0.8 … 20 bar
www.festo.com/en/
Spare_parts_service

Wearing parts kits
➔ 44

With this device, the filter and pressure regulator are combined into a single unit. The sintered filter with water separator removes contamination, pipe sinter, rust and condensate from the compressed air.

- Good control characteristics with low hysteresis and primary pressure compensation
- Good particle and condensate separation
- High flow rates
- Pilot actuated diaphragm regulator without intrinsic air consumption
- Three pressure regulation ranges: 0.3 … 7 bar, 0.5 … 12 bar and 0.5 … 16 bar
- Pressure gauge connection for different fitting options
- Available with manual, fully automatic or fully automatic, electrically actuated condensate drain
- Regulator lock for protecting the values against adjustment
- Choice of filter cartridges: 5 µm or 40 µm
- New filter cartridges ➔ 47

General technical data					
Pneumatic connection 1, 2[1]		G1	G1¼	G1½	G2
Design		Filter regulator with/without pressure gauge			
		Sintered filter with centrifugal separation			
		Pilot actuated diaphragm regulator			
Regulating function		Output pressure constant, with primary pressure compensation, with secondary venting			
Type of mounting		Via accessories			
		In-line installation			
Assembly position		Vertical ±5°			
Grade of filtration	[µm]	5			
		40			
Air purity class at the output		Compressed air in accordance with ISO 8573-1:2010 [6:4:4] (Grade of filtration 5 µm)			
		Compressed air in accordance with ISO 8573-1:2010 [7:4:4] (Grade of filtration 40 µm)			
Bowl guard		Integrated as metal bowl			
Condensate drain		Manual rotary			
		Fully automatic			
		Fully automatic, electrical actuated			
Regulator lock		Rotary knob with detent			
		Rotary knob with detent, lockable via accessories			
		Rotary knob with integrated lock			
Pressure regulation range	D6 [bar]	0.3 … 7			
	D7 [bar]	0.5 … 12			
	D8 [bar]	0.5 … 16			
Max. hysteresis	[bar]	0.4			
Pressure indicator		With pressure gauge			
Max. condensate volume	[cm³]	400			

1) Dependent on connecting plate selected, must be ordered separately as an accessory ➔ Internet: ms12-ag

Note: This product conforms to ISO 1179-1 and ISO 228-1

Filter regulators MS12-LFR, MS series

Technical data

Standard nominal flow rate qnN[1] [l/min]					
Pneumatic connection		G1	G1¼	G1½	G2
Grade of filtration	5 µm	11,000	11,500	12,000	14,000
	40 µm	12,000	12,500	13,000	17,000

1) Dependent on connecting plate selected, must be ordered separately as an accessory ➔ Internet: ms12-ag
measured at p1 = 10 bar and p2 = 6 bar, Δp = 0.5 bar

Operating and environmental conditions				
Condensate drain		Manual rotary M	Fully automatic V	Fully automatic, electrically actuated E2/E3/E4
Operating pressure	[bar]	0.8 … 20	2 … 12	0.8 … 16
Operating medium		Compressed air in accordance with ISO 8573-1:2010 [–:4:–]	Compressed air in accordance with ISO 8573-1:2010 [7:4:–]	Compressed air in accordance with ISO 8573-1:2010 [–:4:–]
		Inert gases		
Ambient temperature	[°C]	–10 … +60	+5 … +60	+1 … +60
Temperature of medium	[°C]	–10 … +60	+5 … +60	+1 … +60
Storage temperature	[°C]	–10 … +60	–10 … +60	+1 … +60
Corrosion resistance class CRC[1]		2		

1) Corrosion resistance class 2 according to Festo standard 940 070
Components subject to moderate corrosion stress. Externally visible parts with primarily decorative surface requirements which are in direct contact with a normal industrial environment or media such as coolants or lubricating agents.

Weights [g]		
Rotary knob	Without integrated lock E11	With integrated lock E11
Filter regulator with metal bowl U	7,000	7,300
Filter regulator with metal bowl U and fully automatic, electrically actuated condensate drain E2/E3/E4	7,700	8,000

Materials

Sectional view

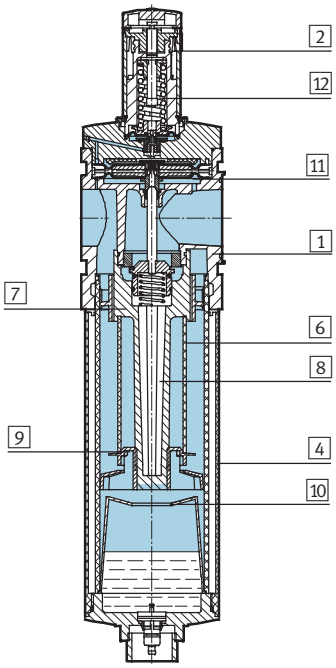

Filter regulator		
1	Body	Die-cast aluminium
2	Rotary knob	PA
	Rotary knob with integrated lock E11	Aluminium
4	Metal bowl	Wrought aluminium alloy
6	Filter element	Sintered bronze
7	Spin disc	POM
8	Filter holder	POM
9	Separating plate	POM
10	Stabilising disc	POM
11	Diaphragm	NBR
12	Spring	Steel
–	Seals	NBR

Standard flow rate qn as a function of output pressure p2		
Grade of filtration 40 µm	With connecting plate MS12-AGF Pneumatic connection G1	With connecting plate MS12-AGG Pneumatic connection G1¼
Input pressure p1 = 10 bar	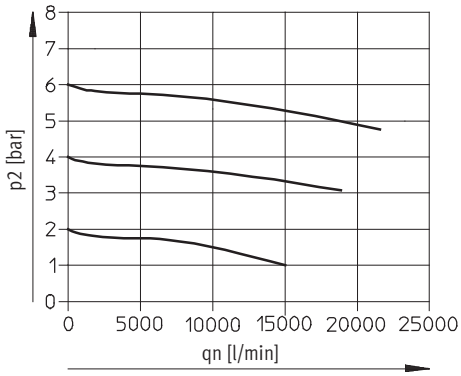	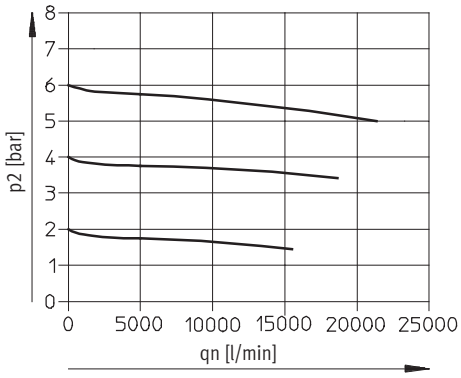
	With connecting plate MS12-AGH Pneumatic connection G1½	With connecting plate MS12-AGI Pneumatic connection G2
Input pressure p1 = 10 bar	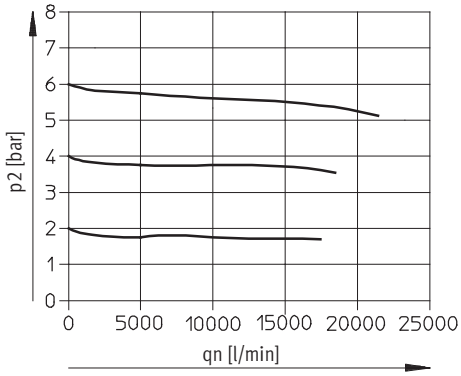	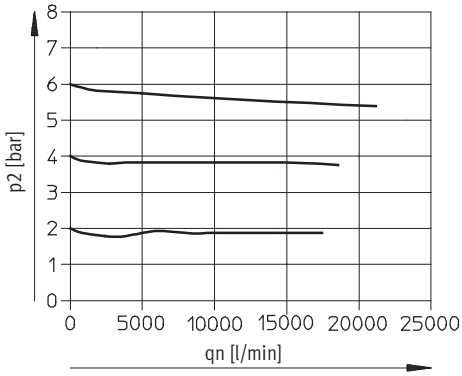

Dimensions Download CAD Data ➔ **www.festo.com/us/cad**

Integrated pressure gauge, display unit [bar], long rotary knob with detent

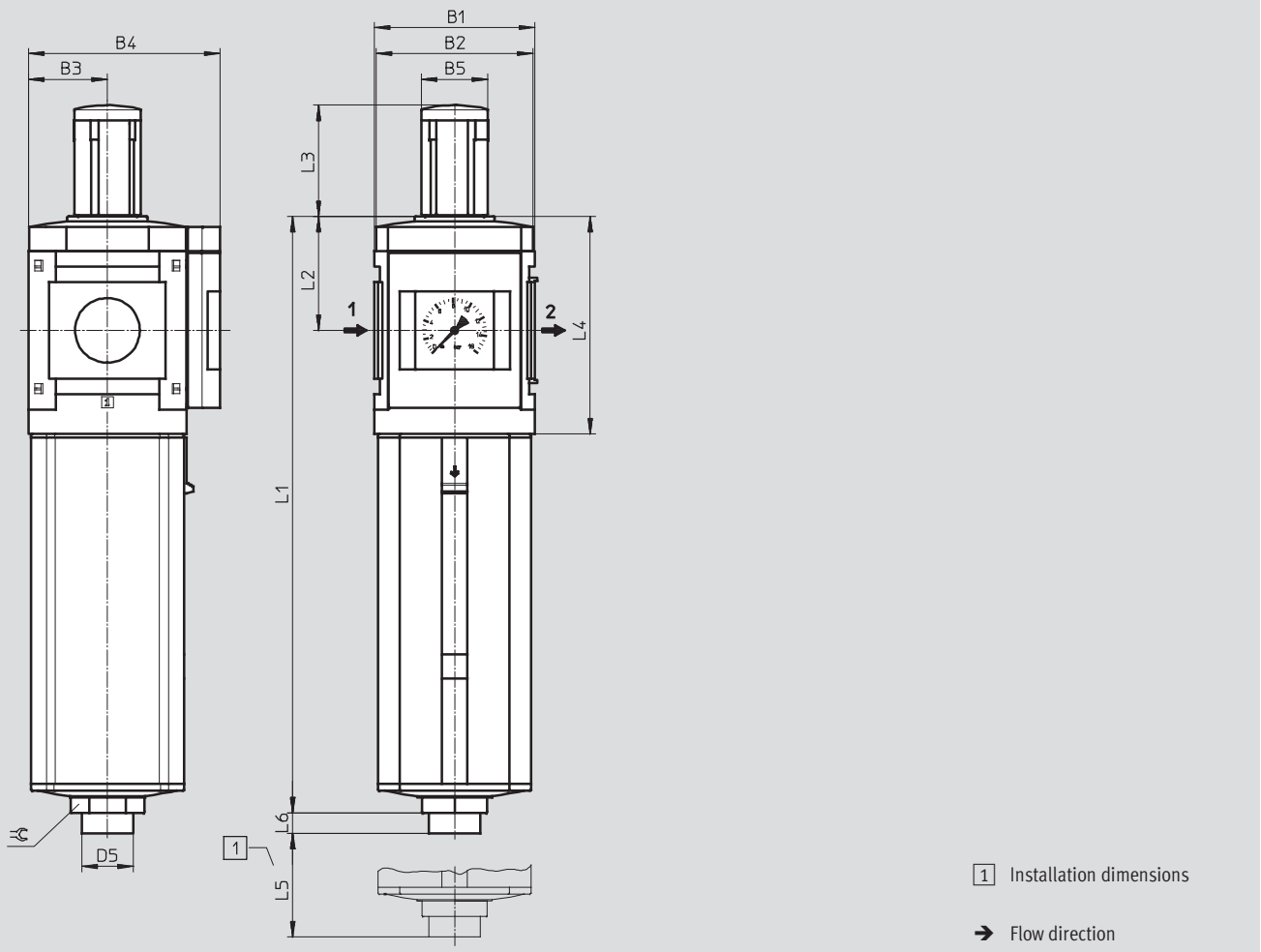

Type	B1	B2	B3	B4	B5	D5 ∅	L1	L2	L3	L4	L5	L6
MS12-LFR-...-LD	124	122	61	148	52	40	460	88	86	168	250	16

Dimensions – Pressure gauge alternatives Download CAD Data ➔ **www.festo.com/us/cad**

Cover plate VS

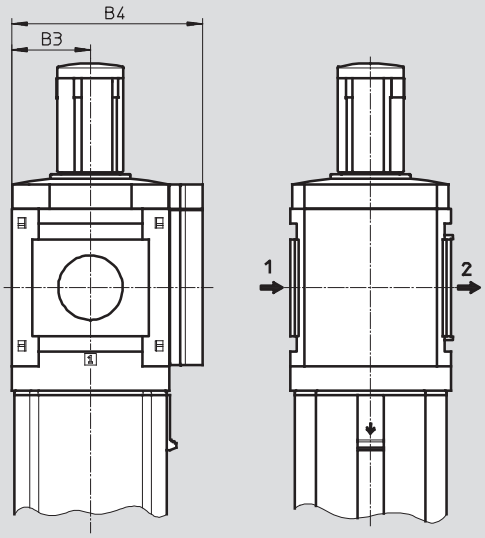

Adapter A4 for EN pressure gauge ¼, without pressure gauge

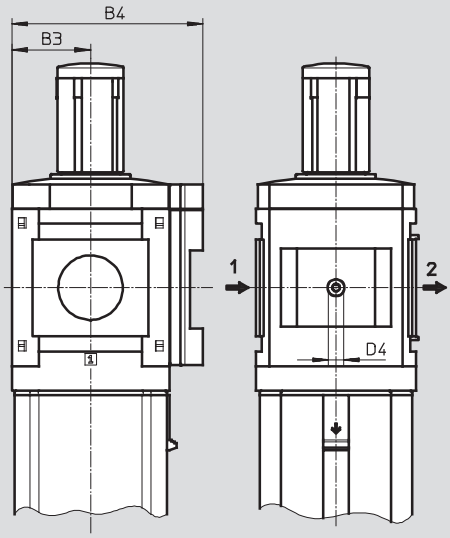

➔ Flow direction

Type	B3	B4	D4
MS12-LFR-...-VS	61	148	–
MS12-LFR-...-A4	61	148	G¼

Note: This product conforms to ISO 1179-1 and ISO 228-1

Dimensions – Rotary knob Download CAD Data ➔ **www.festo.com/us/cad**

Long rotary knob with detent LD

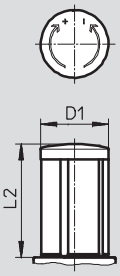

Long rotary knob with detent, lockable via accessories LD-AS

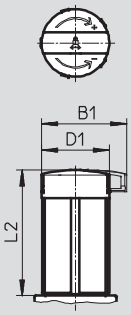

Rotary knob with integrated lock E11

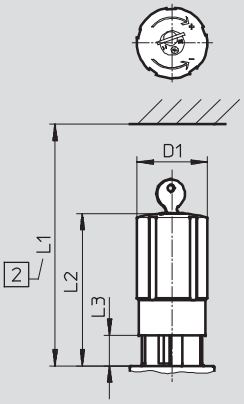

2 Installation dimensions

Type	B1	D1	L1	L2	L3
MS12-LFR-...-LD	–	52	–	86	–
MS12-LFR-...-LD-AS	65	52	–	96	–
MS12-LFR-...-E11	–	52	174	114	25

Dimensions – Condensate drain

Download CAD Data ➔ **www.festo.com/us/cad**

Manual rotary M

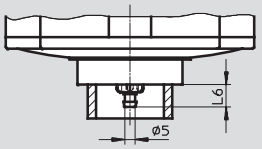

Barbed fitting for plastic tubing PCN-4

Type	L6
MS12-LFR-...-M	11

Fully automatic V

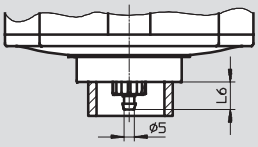

Barbed fitting for plastic tubing PCN-4

Type	L6
MS12-LFR-...-V	13

Fully automatic, electrically actuated E2/E3/E4

Technical data ➔ Internet: pwea

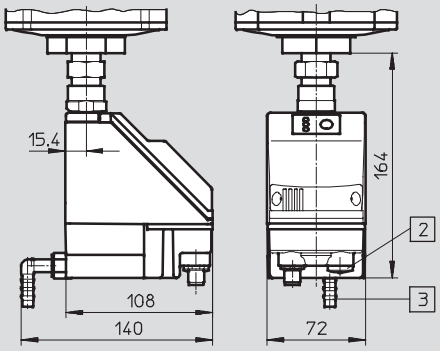

Condensate drain PWEA:

2 Electrical connection: Screw terminal PG9

3 Connection 360° rotatable for plastic tubing PUN-H-12x2

Ordering data

Pressure regulation range 0.5 ... 12 bar, metal bowl, integrated pressure gauge, display unit [bar], long rotary knob with detent, lockable via accessories

Size	Condensate drain	Connection	Grade of filtration 5 µm			Grade of filtration 40 µm	
			Part No.	Type		Part No.	Type
MS12	fully automatic	G1 ... G2[1]	**537150**	**MS12-LFR-G-D7-CUV-LD-AS**		**537149**	**MS12-LFR-G-D7-EUV-LD-AS**

1) Connecting plate must be ordered separately as an accessory ➔ Internet: ms12-ag

Note: This product conforms to ISO 1179-1 and ISO 228-1

Ordering data – Wearing parts kits

Size	Part No.	Type
MS12	**673586**	**MS12-LR/LFR**

Filter regulators MS12-LFR, MS series

Ordering data – Modular products

FESTO

M Mandatory data ➔

Module No.	Series	Size		Function		Connection sizes		Pressure regulation range		Grade of filtration		Bowl
535022	MS	12		LFR		AGF, AGG, AGH, AGI, G		D6, D7, D8		E, C		U
Order example												
535022	**MS**	**12**	–	**LFR**	–	**AGF**	–	**D6**	–	**C**	–	**U**

Ordering table

Grid dimension [mm]		124	Conditions	Code		Enter code
M	Module No.	**535022**				
	Series	Standard		**MS**		MS
	Size	12		**12**		12
	Function	Filter regulator		**-LFR**		-LFR
	Connection sizes	Connecting plate G1		**-AGF**		
		Connecting plate G1¼		**-AGG**		
		Connecting plate G1½		**-AGH**		
		Connecting plate G2		**-AGI**		
		Module without connecting thread, without connecting plate		**-G**		
	Pressure regulation range	0.3 ... 7 bar		**-D6**		
		0.5 ... 12 bar		**-D7**		
		0.5 ... 16 bar		**-D8**		
	Grade of filtration	40 µm		**-E**		
		5 µm		**-C**		
↓	Bowl	Metal bowl		**-U**		-U

Transfer order code

535022	**MS**	**12**	–	**LFR**	–		–		–		–	**U**

Filter regulators MS12-LFR, MS series

Ordering data – Modular products

FESTO

➔ M	O Options					
Condensate drain	Pressure gauge alternatives	Alternative pressure gauge scale	Rotary knob	Security	Type of mounting	Alternative flow direction
M, V, E2, E3, E4,	VS, A4	PSI, MPA	LD	AS, E11	WP	Z
– E2	–	–	– LD	– AS	– WP	– Z

Ordering table

Grid dimension [mm]		124	Conditions	Code		Enter code
↓ M	Condensate drain	Manual		-M		
		Fully automatic (P1 max. 12 bar)	1	-V		
		External fully automatic condensate drain, electrical, 110 V AC, terminal strip		-E2		
		External fully automatic condensate drain, electrical, 230 V AC, terminal strip		-E3		
		External fully automatic condensate drain, electrical, 24 V DC, terminal strip		-E4		
O	Pressure gauge alternatives	Cover plate		-VS		
		Adapter plate for EN pressure gauge ¼, without pressure gauge		-A4		
	Alternative pressure gauge scale	psi	2	-PSI		
		MPa	2	-MPA		
	Rotary knob	Long rotary knob	3 4	-LD		
	Security	Lockable via accessories		-AS		
		With integrated lock	3	-E11		
	Type of mounting	Mounting bracket	5	-WP		
	Alternative flow direction	Flow direction from right to left		-Z		

1 **V** Not with pressure regulation range D8
2 **PSI, MPA** Not with pressure gauge alternatives VS, A4
3 **LD, E11** Either rotary knob LD or security E11 must be selected
4 **LD** Not with security E11
5 **WP** Only with connecting plate AGF, AGG, AGH or AGI

Transfer order code

– [ ] – [ ] – [ ] – [ ] – [ ] – [ ] – [ ]

Filter cartridges

Ordering data			
Size	Grade of filtration [µm]	Part No.	Type
MS4	5 (colour: blue)	**534501**	**MS4-LFP-C**
	40 (colour: white)	**534502**	**MS4-LFP-E**
MS6	5 (colour: blue)	**534499**	**MS6-LFP-C**
	40 (colour: white)	**534500**	**MS6-LFP-E**
MS9	5	**570309**	**MS9-LFP-C**
	40	**570310**	**MS9-LFP-E**
MS12	5	**537143**	**MS12-LFP-C**
	40	**537144**	**MS12-LFP-E**

Ordering data – Connecting cable NEBU-M8				Technical data ➔ Internet: nebu	
	Electrical connection	Number of wires	Cable length [m]	Part No.	Type
	M8x1, straight socket	3	2.5	**541333**	**NEBU-M8G3-K-2.5-LE3**
			5	**541334**	**NEBU-M8G3-K-5-LE3**
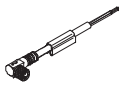	M8x1, angled socket	3	2.5	**541338**	**NEBU-M8W3-K-2.5-LE3**
			5	**541341**	**NEBU-M8W3-K-5-LE3**

Ordering data – Connecting cable NEBU-M12				Technical data ➔ Internet: nebu	
	Electrical connection	Number of wires	Cable length [m]	Part No.	Type
	M12x1, straight socket	4	2.5	**550326**	**NEBU-M12G5-K-2.5-LE4**
			5	**541328**	**NEBU-M12G5-K-5-LE4**
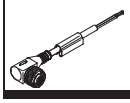	M12x1, angled socket	4	2.5	**550325**	**NEBU-M12W5-K-2.5-LE4**
			5	**541329**	**NEBU-M12W5-K-5-LE4**

Ordering data – Pressure gauge MA						
	Nominal size	Pneumatic connection	Indicating range		Part No.	Type
			[bar]	[psi]		
	Pressure gauge MA, DIN EN 837-1					Technical data ➔ Internet: ma
	40	R¼	0 ... 16	0 ... 232	**187080**	**MA-40-16-R¼-EN**
			0 ... 25	0 ... 360	**187081**	**MA-40-25-R¼-EN**
		G¼	0 ... 16	0 ... 232	**183901**	**MA-40-16-G¼-EN**
	Pressure gauge MA, DIN EN 837-1, with red-green range					Technical data ➔ Internet: ma
	40	R⅛	0 ... 16	–	**525726**	**MA-40-16-R⅛-E-RG**
	50	R¼	0 ... 16	–	**525729**	**MA-50-16-R¼-E-RG**

Ordering data – Padlock LRVS-D			
	Weight [g]	Part No.	Type
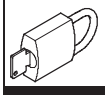	120	**193786**	**LRVS-D**

Product Range and Company Overview

A Complete Suite of Automation Services

Our experienced engineers provide complete support at every stage of your development process, including: conceptualization, analysis, engineering, design, assembly, documentation, validation, and production.

Custom Automation Components
Complete custom engineered solutions

Custom Control Cabinets
Comprehensive engineering support and on-site services

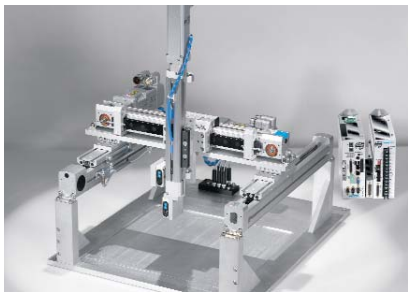

Complete Systems
Shipment, stocking and storage services

The Broadest Range of Automation Components

With a comprehensive line of more than 30,000 automation components, Festo is capable of solving the most complex automation requirements.

Electromechanical
Electromechanical actuators, motors, controllers & drives

Pneumatics
Pneumatic linear and rotary actuators, valves, and air supply

PLCs and I/O Devices
PLC's, operator interfaces, sensors and I/O devices

Supporting Advanced Automation... As No One Else Can!
Festo is a leading global manufacturer of pneumatic and electromechanical systems, components and controls for industrial automation, with more than 12,000 employees in 56 national headquarters serving more than 180 countries. For more than 80 years, Festo has continuously elevated the state of manufacturing with innovations and optimized motion control solutions that deliver higher performing, more profitable automated manufacturing and processing equipment. Our dedication to the advancement of automation extends beyond technology to the education and development of current and future automation and robotics designers with simulation tools, teaching programs, and on-site services.

Quality Assurance, ISO 9001 and ISO 14001 Certifications

Festo Corporation is committed to supply all Festo products and services that will meet or exceed our customers' requirements in product quality, delivery, customer service and satisfaction.

To meet this commitment, we strive to ensure a consistent, integrated, and systematic approach to management that will meet or exceed the requirements of the ISO 9001 standard for Quality Management and the ISO 14001 standard for Environmental Management.

9001: CERTCC5-16248-2006-AQ-ESN-TGA
ISO 9001
ISO 14001
DNV
Certified Company
14001: CERTCC5-16248A-2006-AQ-ESN-TGA

© Copyright 2008, Festo Corporation. While every effort is made to ensure that all dimensions and specifications are correct, Festo cannot guarantee that publications are completely free of any error, in particular typing or printing errors. Accordingly, Festo cannot be held responsible for the same. For Liability and Warranty conditions, refer to our "Terms and Conditions of Sale", available from your local Festo office. All rights reserved. No part of this publication may be reproduced, distributed, or transmitted in any form or by any means, electronic, mechanical, photocopying or otherwise, without the prior written permission of Festo. All technical data subject to change according to technical update.

FSC
Printed on recycled paper at New Horizon Graphic, Inc., FSC certified as an environmentally friendly printing plant.

Festo North America

Festo Regional Contact Center

5300 Explorer Drive
Mississauga, Ontario L4W 5G4
Canada

USA Customers:

For ordering assistance,
Call: 1.800.99.FESTO (1.800.993.3786)
Fax: 1.800.96.FESTO (1.800.963.3786)
Email: customer.service@us.festo.com

For technical support,
Call: 1.866.GO.FESTO (1.866.463.3786)
Fax: 1.800.96.FESTO (1.800.963.3786)
Email: product.support@us.festo.com

Canadian Customers:

Call: 1.877.GO.FESTO (1.877.463.3786)
Fax: 1.877.FX.FESTO (1.877.393.3786)
Email: festo.canada@ca.festo.com

USA Headquarters

Festo Corporation
395 Moreland Road
P.O. Box 18023
Hauppauge, NY 11788, USA
www.festo.com/us

USA Sales Offices

Appleton
North 922 Tower View Drive, Suite N
Greenville, WI 54942, USA

Boston
120 Presidential Way, Suite 330
Woburn, MA 01801, USA

Chicago
1441 East Business Center Drive
Mt. Prospect, IL 60056, USA

Dallas
1825 Lakeway Drive, Suite 600
Lewisville, TX 75057, USA

Detroit – Automotive Engineering Center
2601 Cambridge Court, Suite 320
Auburn Hills, MI 48326, USA

New York
395 Moreland Road
Hauppauge, NY 11788, USA

Silicon Valley
4935 Southfront Road, Suite F
Livermore, CA 94550, USA

United States

USA Headquarters, East: Festo Corp., 395 Moreland Road, Hauppauge, NY 11788
Phone: 1.631.435.0800; Fax: 1.631.435.8026;
Email: info@festo-usa.com **www.festo.com/us**

Canada

Headquarters: Festo Inc., 5300 Explorer Drive, Mississauga, Ontario L4W 5G4
Phone: 1.905.624.9000; Fax: 1.905.624.9001;
Email: festo.canada@ca.festo.com **www.festo.ca**

Mexico

Headquarters: Festo Pneumatic, S.A., Av. Ceylán 3, Col. Tequesquinahuac,
54020 Tlalnepantla, Edo. de México
Phone: 011 52 [55] 53 21 66 00; Fax: 011 52 [55] 53 21 66 65;
Email: festo.mexico@mx.festo.com **www.festo.com/mx**

Central USA
Festo Corporation
1441 East Business
Center Drive
Mt. Prospect, IL 60056, USA
Phone: 1.847.759.2600
Fax: 1.847.768.9480

Western USA
Festo Corporation
4935 Southfront Road,
Suite F
Livermore, CA 94550, USA
Phone: 1.925.371.1099
Fax: 1.925.245.1286

Festo Worldwide

Argentina Australia Austria Belarus Belgium Brazil Bulgaria Canada Chile China Colombia Croatia Czech Republic Denmark Estonia Finland France Germany Great Britain Greece Hong Kong Hungary India Indonesia Iran Ireland Israel Italy Japan Latvia Lithuania Malaysia Mexico Netherlands New Zealand Norway Peru Philippines Poland Romania Russia Serbia Singapore Slovakia Slovenia South Africa South Korea Spain Sweden Switzerland Taiwan Thailand Turkey Ukraine United States Venezuela

www.festo.com