Filters MS-LF/LFM/LFX, MS series

FESTO

Filters MS-LF/LFM/LFX, MS series

Product range overview – MS series service units

Type		Size	Pneumatic connection in housing	Connecting plate	Pressure regulation range [bar]						Grade of filtration [µm]			
					0.05 ... 0.7	0.05 ... 2.5	0.1 ... 4	0.3 ... 7	0.1 ... 12	0.5 ... 16	0.01	1	5	40
Code				AG...	D2	D4	D5	D6	D7	D8	A	B	C	E
Service units														
MSB-FRC	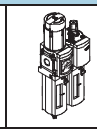	4	G1/8, G1/4	G1/8, G1/4, G3/8	–	–	–	■	■	–	–	–	■	■
		6	G1/4, G3/8, G1/2	G1/4, G3/8, G1/2, G3/4	–	–	–	■	■	–	–	–	■	■
		9	–											
		12	–											
Service unit combinations (further variants can be ordered using the configurator ➔ Internet: msb4, msb6 or msb9)														
MSB	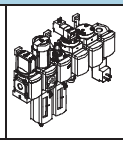	4	G1/4	G1/8, G1/4, G3/8	–	–	–	■	■	–	–	–	■	■
		6	G1/2	G1/4, G3/8, G1/2, G3/4	–	–	–	■	■	–	–	–	■	■
		9	–											
		12	–											
Individual devices														
Filter regulators **MS-LFR**	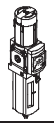	4	G1/8, G1/4	G1/8, G1/4, G3/8	–	–	■	■	■	–	–	–	■	■
		6	G1/4, G3/8, G1/2	G1/4, G3/8, G1/2, G3/4	–	–	■	■	■	■	–	–	■	■
		9	G3/4, G1	G1/2, G3/4, G1, G1 1/4, G1 1/2	–	–	■	■	–	–	–	–	■	■
		12	–	G1, G1 1/4, G1 1/2, G2	–	–	–	■	■	■	–	–	■	■
Filters **MS-LF**	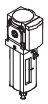	4	G1/8, G1/4	G1/8, G1/4, G3/8	–	–	–	–	–	–	–	–	■	■
		6	G1/4, G3/8, G1/2	G1/4, G3/8, G1/2, G3/4	–	–	–	–	–	–	–	–	■	■
		9	G3/4, G1	G1/2, G3/4, G1, G1 1/4, G1 1/2	–	–	–	–	–	–	–	–	■	■
		12	–	G1, G1 1/4, G1 1/2, G2	–	–	–	–	–	–	–	–	■	■
Fine and micro filters **MS-LFM**	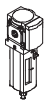	4	G1/8, G1/4	G1/8, G1/4, G3/8	–	–	–	–	–	–	■	■	–	–
		6	G1/4, G3/8, G1/2	G1/4, G3/8, G1/2, G3/4	–	–	–	–	–	–	■	■	–	–
		9	G3/4, G1	G1/2, G3/4, G1, G1 1/4, G1 1/2	–	–	–	–	–	–	■	■	–	–
		12	–	G1, G1 1/4, G1 1/2, G2	–	–	–	–	–	–	■	■	–	–
Activated carbon filters **MS-LFX**	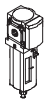	4	G1/8, G1/4	G1/8, G1/4, G3/8	–	–	–	–	–	–	–	–	–	–
		6	G1/4, G3/8, G1/2	G1/4, G3/8, G1/2, G3/4	–	–	–	–	–	–	–	–	–	–
		9	G3/4, G1	G1/2, G3/4, G1, G1 1/4, G1 1/2	–	–	–	–	–	–	–	–	–	–
		12	–	G1, G1 1/4, G1 1/2, G2	–	–	–	–	–	–	–	–	–	–
Water separators **MS-LWS**	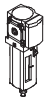	4	–											
		6	G1/4, G3/8, G1/2	G1/4, G3/8, G1/2, G3/4	–	–	–	–	–	–	–	–	–	–
		9	–											
		12	–											

Filters MS-LF/LFM/LFX, MS series

Product range overview – MS series service units

Type	Size	Bowl guard		Condensate drains				Pressure indicator					Security		Options		➔ Page/ Internet
		Plastic bowl with plastic bowl guard	Metal bowl	Manual rotary	Semi-automatic	Fully automatic	External, fully automatic, electrical	Cover plate (without pressure gauge)	Integrated MS pressure gauge	Adapter plate for EN pressure gauge G1/8	Adapter plate for EN pressure gauge G1/4	Pressure sensor	Rotary knob with detent, lockable via accessories	Rotary knob with integrated lock	Silencer	Flow direction from right to left	
Code		R	U	M	H	V	E...	VS	AG	A8	A4	AD...	AS	E11	S	Z	
Service units																	
MSB-FRC	4	■	–	■	–	■	–	–	■	–	–	–	■	–	–	■	msb4
	6	■	■	■	–	■	–	–	■	–	–	–	■	–	–	■	msb6
	9	–															–
	12	–															–
Service unit combinations																	
MSB	4	■	■	■	–	■	–	–	■	–	–	–	■	–	–	■	msb4
	6	■	■	■	–	■	–	–	■	–	–	–	■	–	–	■	msb6
	9	–															–
	12	–															–
Individual devices																	
Filter regulators **MS-LFR**	4	■	■	■	■	■	–	■	■	■	■	■	■	■	–	■	ms4-lfr
	6	■	■	■	■	■	■	■	■	–	■	■	■	■	–	■	ms6-lfr
	9	–	■	■	■	■	■	■	■	–	■	■	■	■	–	■	ms9-lfr
	12	–	■	■	–	■	■	■	■	–	■	–	■	■	–	■	ms12-lfr
Filters **MS-LF**	4	■	■	■	■	■	–	–	–	–	–	–	–	–	–	■	8, 10
	6	■	■	■	■	■	■	–	–	–	–	–	–	–	–	■	8, 10
	9	–	■	■	■	■	■	–	–	–	–	–	–	–	–	■	36
	12	–	■	■	–	■	■	–	–	–	–	–	–	–	–	■	63
Fine and micro filters **MS-LFM**	4	■	■	■	■	■	–	–	–	–	–	–	–	–	–	■	8, 18
	6	■	■	■	■	■	■	–	–	–	–	–	–	–	–	■	8, 18
	9	–	■	■	–	■	■	–	–	–	–	–	–	–	–	■	44
	12	–	■	■	–	■	■	–	–	–	–	–	–	–	–	■	70
Activated carbon filters **MS-LFX**	4	■	■	–	–	–	–	–	–	–	–	–	–	–	–	■	8, 30
	6	■	■	–	–	–	–	–	–	–	–	–	–	–	–	■	8, 30
	9	–	■	–	–	–	–	–	–	–	–	–	–	–	–	■	56
	12	–	■	–	–	–	–	–	–	–	–	–	–	–	–	■	79
Water separators **MS-LWS**	4	–															–
	6	–	■	–	–	■	■	–	–	–	–	–	–	–	–	■	ms6-lws
	9	–															–
	12	–															–

Filters MS-LF/LFM/LFX, MS series

Product range overview – MS series service units

Type		Size	Pneumatic connection in housing	Connecting plate	Pressure regulation range [bar]						Supply voltage			
					0.05 ... 0.7	0.05 ... 2.5	0.1 ... 4	0.3 ... 7	0.1 ... 12	0.5 ... 16	24 V DC, connection pattern to EN 175301	24 V DC, connection pattern M12 to DESINA	110 V AC, connection pattern to EN 175301	230 V AC, connection pattern to EN 175301
Code				AG...	D2	D4	D5	D6	D7	D8	V24	V24P	V110	V230
Individual devices														
Pressure regulators **MS-LR**		4	G⅛, G¼	G⅛, G¼, G⅜	–	–	■	■	■	–	–	–	–	–
		6	G¼, G⅜, G½	G¼, G⅜, G½, G¾	–	–	■	■	■	■	–	–	–	–
		9	G¾, G1	G½, G¾, G1, G1¼, G1½	–	–	■	■	–	–	–	–	–	–
		12	–	G1, G1¼, G1½, G2	–	–	–	■	■	■	–	–	–	–
Pressure regulators **MS-LRB**		4	G¼	G⅛, G¼, G⅜	–	–	■	■	■	–	–	–	–	–
		6	G½	G¼, G⅜, G½, G¾	–	–	■	■	■	■	–	–	–	–
		9	–											
		12	–											
Precision pressure regulators **MS-LRP**		4	–											
		6	G¼, G⅜, G½	G¼, G⅜, G½, G¾	■	■	■	–	■	–	–	–	–	–
		9	–											
		12	–											
Precision pressure regulators **MS-LRPB**		4	–											
		6	G½	G¼, G⅜, G½, G¾	■	■	■	–	■	–	–	–	–	–
		9	–											
		12	–											
Electrical pressure regulators **MS-LRE**		4	–											
		6	G¼, G⅜, G½	G¼, G⅜, G½, G¾	–	–	■	■	■	■	–	–	–	–
		9	–											
		12	–											
Lubricators **MS-LOE**	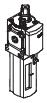	4	G⅛, G¼	G⅛, G¼, G⅜	–	–	–	–	–	–	–	–	–	–
		6	G¼, G⅜, G½	G¼, G⅜, G½, G¾	–	–	–	–	–	–	–	–	–	–
		9	–											
		12	–	G1, G1¼, G1½, G2	–	–	–	–	–	–	–	–	–	–
Electrical on-off valves **MS-EM(1)**		4	G⅛, G¼	G⅛, G¼, G⅜	–	–	–	–	–	–	–	–	–	–
		6	G¼, G⅜, G½	G¼, G⅜, G½, G¾	–	–	–	–	–	–	–	–	–	–
		9	G¾, G1	G½, G¾, G1, G1¼, G1½	–	–	–	–	–	–	–	–	–	–
		12	–	G1, G1¼, G1½, G2	–	–	–	–	–	–	–	–	–	–
Electrical on-off valves **MS-EE**		4	G⅛, G¼	G⅛, G¼, G⅜	–	–	–	–	–	–	■	–	■	■
		6	G¼, G⅜, G½	G¼, G⅜, G½, G¾	–	–	–	–	–	–	■	–	■	■
		9	G¾, G1	G½, G¾, G1, G1¼, G1½	–	–	–	–	–	–	■	■	■	■
		12	–	G1, G1¼, G1½, G2	–	–	–	–	–	–	■	■	■	■
Electrical soft-start valves **MS-DL**		4	G⅛, G¼	G⅛, G¼, G⅜	–	–	–	–	–	–	–	–	–	–
		6	G¼, G⅜, G½	G¼, G⅜, G½, G¾	–	–	–	–	–	–	–	–	–	–
		9	–											
		12	–	G1, G1¼, G1½, G2	–	–	–	–	–	–	–	–	–	–
Electrical soft-start valves **MS-DE**		4	G⅛, G¼	G⅛, G¼, G⅜	–	–	–	–	–	–	■	–	■	■
		6	G¼, G⅜, G½	G¼, G⅜, G½, G¾	–	–	–	–	–	–	■	–	■	■
		9	–											
		12	–	G1, G1¼, G1½, G2	–	–	–	–	–	–	■	■	■	■
Soft start and exhaust valves **MS-SV**		4	–											
		6	G½	G¼, G⅜, G½, G¾	–	–	–	–	–	–	■	–	–	–
		9	–											
		12	–											

Filters MS-LF/LFM/LFX, MS series

Product range overview – MS series service units

FESTO

Type	Size	Bowl guard		Pressure indicator					Security		Options		➔ Page/ Internet
		Plastic bowl with plastic bowl guard	Metal bowl	Cover plate (without pressure gauge)	Integrated MS pressure gauge	Adapter plate for EN pressure gauge G1/8	Adapter plate for EN pressure gauge G1/4	Pressure sensor	Rotary knob with detent, lockable via accessories	Rotary knob with integrated lock	Silencer	Flow direction from right to left	
Code		R	U	VS	AG	A8	A4	AD...	AS	E11	S	Z	
Individual devices													
Pressure regulators **MS-LR**	4	–	–	■	■	■	■	■	■	■	–	■	ms4-lr
	6	–	–	■	■	–	■	■	■	■	–	■	ms6-lr
	9	–	–	■	■	–	■	■	■	■	–	■	ms9-lr
	12	–	–	■	■	–	■	–	■	■	–	■	ms12-lr
Pressure regulators **MS-LRB**	4	–	–	■	■	■	■	■	■	■	–	■	ms4-lrb
	6	–	–	■	■	–	■	■	■	■	–	■	ms6-lrb
	9	–											–
	12	–											–
Precision pressure regulators **MS-LRP**	4	–											–
	6	–	–	■	–	■	■	■	■	■	–	■	ms6-lrp
	9	–											–
	12	–											–
Precision pressure regulators **MS-LRPB**	4	–											–
	6	–	–	■	–	■	■	■	■	■	–	■	ms6-lrpb
	9	–											–
	12	–											–
Electrical pressure regulators **MS-LRE**	4	–											–
	6	–	–	■	■	–	■	–	–	–	–	■	ms6-lre
	9	–											–
	12	–											–
Lubricators **MS-LOE**	4	■	■	–	–	–	–	–	–	–	–	■	ms4-loe
	6	■	■	–	–	–	–	–	–	–	–	■	ms6-loe
	9	–											–
	12	–	■	–	–	–	–	–	–	–	–	■	ms12-loe
Electrical on-off valves **MS-EM(1)**	4	–	–	■	■	■	■	■	–	–	■	■	ms4-em1
	6	–	–	■	■	–	■	■	–	–	■	■	ms6-em1
	9	–	–	■	■	–	■	■	–	–	■	■	ms9-em
	12	–	–	■	■	–	■	–	–	–	■	■	ms12-em
Electrical on-off valves **MS-EE**	4	–	–	■	■	■	■	■	–	–	■	■	ms4-ee
	6	–	–	■	■	–	■	■	–	–	■	■	ms6-ee
	9	–	–	■	■	–	■	■	–	–	■	■	ms9-ee
	12	–	–	■	■	–	■	–	–	–	■	■	ms12-ee
Electrical soft-start valves **MS-DL**	4	–	–	■	■	■	■	■	–	–	–	■	ms4-dl
	6	–	–	■	■	–	■	■	–	–	–	■	ms6-dl
	9	–											–
	12	–	–	■	■	–	■	–	–	–	–	■	ms12-dl
Electrical soft-start valves **MS-DE**	4	–	–	■	■	■	■	■	–	–	–	■	ms4-de
	6	–	–	■	■	–	■	■	–	–	–	■	ms6-de
	9	–											–
	12	–	–	■	■	–	■	–	–	–	–	■	ms12-de
Soft start and exhaust valves **MS-SV**	4	–											–
	6	–	–	■	■	–	■	■	–	–	■	■	ms6-sv
	9	–											–
	12	–											–

Filters MS-LF/LFM/LFX, MS series

Product range overview – MS series service units

Type		Size	Pneumatic connection in housing	Connecting plate	Pressure regulation range [bar]				Supply voltage			
					0.1 ... 4	0.3 ... 7	0.1 ... 12	0.5 ... 16	24 V DC, connection pattern to EN 175301	24 V DC, connection pattern M12 to DESINA	110 V AC, connection pattern to EN 175301	230 V AC, connection pattern to EN 175301
Code				AG...	D5	D6	D7	D8	V24	V24P	V110	V230
Individual devices												
Membrane air dryers **MS-LDM1**	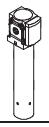	4	G⅛, G¼	G⅛, G¼, G⅜	–	–	–	–	–	–	–	–
		6	G¼, G⅜, G½	G¼, G⅜, G½, G¾	–	–	–	–	–	–	–	–
		9	–									
		12	–									
Branching modules **MS-FRM**		4	G⅛, G¼	G⅛, G¼, G⅜	–	–	–	–	–	–	–	–
		6	G¼, G⅜, G½	G¼, G⅜, G½, G¾	–	–	–	–	–	–	–	–
		9	G¾, G1	G½, G¾, G1, G1¼, G1½	–	–	–	–	–	–	–	–
		12	–	G1, G1¼, G1½, G2	–	–	–	–	–	–	–	–
Distributor blocks **MS-FRM-FRZ**		4	G¼	–	–	–	–	–	–	–	–	–
		6	G½	–	–	–	–	–	–	–	–	–
		9	–									
		12	–									
Flow sensors **SFAM**		4	–									
		6	G½	G½	–	–	–	–	–	–	–	–
		9	–									
		12	–									

Filters MS-LF/LFM/LFX, MS series

Product range overview – MS series service units

Type	Size	Bowl guard		Pressure indicator					Switch output		Options		➔ Page/ Internet
		Plastic bowl with plastic bowl guard	Metal bowl	Cover plate (without pressure gauge)	Integrated MS pressure gauge	Adapter plate for EN pressure gauge G1/8	Adapter plate for EN pressure gauge G1/4	Pressure sensor	2x PNP	2x NPN	Silencer	Flow direction from right to left	
Code		R	U	VS	AG	A8	A4	AD...	P2/2S	N2/2S	S	Z/R	
Individual devices													
Membrane air dryers **MS-LDM1**	4	–	■	–	–	–	–	–	–	–	–	■	ms4-ldm1
	6	–	■	–	–	–	–	–	–	–	–	■	ms6-ldm1
	9	–											–
	12	–											–
Branching modules **MS-FRM**	4	–	–	■	■	■	■	■	–	–	–	■	ms4-frm
	6	–	–	■	■	–	■	■	–	–	–	■	ms6-frm
	9	–	–	■	■	–	■	■	–	–	–	■	ms9-frm
	12	–	–	■	–	–	–	–	–	–	–	–	ms12-frm
Distributor blocks **MS-FRM-FRZ**	4	–	–	–	–	–	–	–	–	–	–	■	ms4-frm
	6	–	–	–	–	–	–	–	–	–	–	■	ms6-frm
	9	–											–
	12	–											–
Flow sensors **SFAM**	4	–											–
	6	–	–	–	–	–	–	–	■	■	–	■	sfam
	9	–											–
	12	–											–

Filters MS4/MS6-LF/LFM/LFX, MS series

Peripherals overview

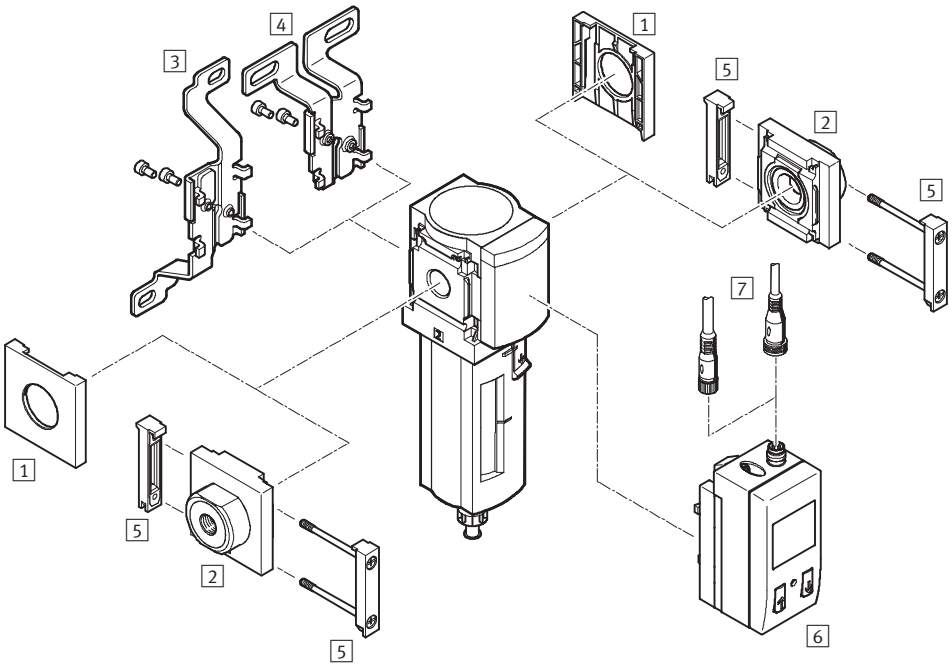

Note

Other accessories:
- Module connector for combination with sizes MS4/MS6 or size MS9 ➔ Internet: amv, rmv, armv
- Adapter plate for mounting on profiles ➔ Internet: ipm-80, ipm-40-80, ipm-80-80

Mounting attachments and accessories					
	Individual device		Combination		➔ Page/Internet
	without connecting plate	with connecting plate	without connecting plate	with connecting plate	
1 Cover plate MS4/6-END	■	–	■	–	ms4-end, ms6-end
2 Connecting plate MS4/6-AG...	–	■	–	■	ms4-ag, ms6-ag
3 Mounting bracket MS4/6-WB	■	■	–	–	ms4-wb, ms6-wb
4 Mounting bracket MS4-WBM	■	■	–	–	ms4-wbm
5 Module connector MS4/6-MV	–	■	■	■	ms4-mv, ms6-mv
6 Filter pollution indicator DP/DN/DPI/DNI	■ for LFM	■ for LFM	■ for LFM	■ for LFM	28
7 Connecting cable NEBU-M8...-LE3/NEBU-M12...-LE4	■ for LFM	■ for LFM	■ for LFM	■ for LFM	nebu
– Mounting bracket MS4/6-WP/WPB/WPE/WPM	–	■	■	■	ms4-wp, ms6-wp

Filters MS4/MS6-LF/LFM/LFX, MS series

Type codes

MS	6	–	LFM	–	¼	–	A	R	M	–		–	DA

Series	
MS	Standard service unit

Size	
4	Grid dimension 40 mm
6	Grid dimension 62 mm

Service function	
LF	Filter
LFM	Fine and micro filter
LFX	Activated carbon filter

Pneumatic connection	
MS4	
⅛	G⅛ thread
¼	G¼ thread
MS6	
¼	G¼ thread
⅜	G⅜ thread
½	G½ thread

Grade of filtration (for LF and LFM only)	
A	0.01 µm
B	1 µm
C	5 µm
E	40 µm

Bowl guard	
R	Plastic bowl guard
U	Metal bowl

Condensate drain (for LF and LFM only)	
M	Manual rotary
V	Fully automatic

Flow rate (for LFM and LFX only)	
	Standard
HF	High flow rate

Filter change sensor (for LFM only)	
	Without differential pressure indicator
DA	Differential pressure indicator

Further variants can be ordered using the modular system	
Filters LF	➔ 16
Fine and micro filters LFM	➔ 28
Activated carbon filters LFX	➔ 35

- Connecting plates
- Condensate drain
- Range of application (only for LFM and LFX)
- Filter pollution indicator (for LFM only)
- Type of mounting
- Alternative flow direction

Filters MS4/MS6-LF, MS series

Technical data

Function
Condensate drain
manual rotary

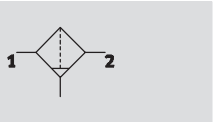

semi or fully automatic

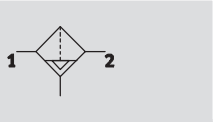

Flow rate
1,000 … 4,100 l/min

Temperature range
–10 … +60 °C

Input pressure
0 … 20 bar

www.festo.com
Wearing parts kits
➔ 15

The sintered filter with centrifugal separation removes contamination, rust and condensate from the compressed air. The filter cartridges are replaceable.

- Good particle and condensate separation
- High flow rate with minimal pressure drop
- Available with manual, semi-automatic, fully automatic or fully automatic, electrically actuated condensate drain
- Choice of filter cartridges: 5 µm or 40 µm
- New filter cartridges ➔ 85

General technical data						
Size		MS4		MS6		
Pneumatic connection 1, 2		G⅛	G¼	G¼	G⅜	G½
Design		Sintered filter with centrifugal separation				
Type of mounting		Via accessories				
		In-line installation				
Assembly position		Vertical ±5°				
Grade of filtration	[µm]	5 (air purity class at the output 3.7.– to DIN ISO 8573-1)				
		40 (air purity class at the output 5.7.– to DIN ISO 8573-1)				
Bowl guard		Plastic bowl guard				
		Metal bowl				
Condensate drain		Manual rotary				
		Semi-automatic				
		Fully automatic				
		–		Fully automatic, electrical		
Max. condensate volume	[cm³]	19 (with plastic bowl guard) 25 (with metal bowl)		38		

Note: This product conforms to ISO 1179-1 and to ISO 228-1

Standard nominal flow rate qnN[1] [l/min]						
Size		MS4		MS6		
Pneumatic connection		G⅛	G¼	G¼	G⅜	G½
Grade of filtration	5 µm	1,000	1,300	2,000	3,000	3,200
	40 µm	1,100	1,700	2,500	3,800	4,100

1) Measured at p1 = 6 bar and Δp = 1 bar

Filters MS4/MS6-LF, MS series

Technical data

Operating and environmental conditions								
Condensate drain		Manual rotary M		Semi-automatic H		Fully automatic V		Fully automatic, electrical E1 … E4
Size		MS4	MS6	MS4	MS6	MS4	MS6	MS6
Input pressure	[bar]	0 … 14	0 … 20	1.5 … 12	1.5 … 12	2 … 12	2 … 12	0.8 … 16
Operating medium		Compressed air						
Ambient temperature	[°C]	−10 … +60		+5 … +60		+5 … +60		+1 … +60
Temperature of medium	[°C]	−10 … +60		+5 … +60		+5 … +60		+1 … +60
Storage temperature	[°C]	−10 … +60		−10 … +60		−10 … +60		+1 … +60
Corrosion resistance	CRC[1)]	2						

1) Corrosion resistance class 2 according to Festo standard 940 070
Components requiring moderate corrosion resistance. Externally visible parts with primarily decorative surface requirements which are in direct contact with a normal industrial environment or media such as coolants or lubricating agents.

Weights [g]		
Size	MS4	MS6
Filter with plastic bowl guard R	190	600
Filter with metal bowl U	350	820
Filter with metal bowl U and fully automatic, electrically actuated condensate drain E1 … E4	–	1,800

Materials

Sectional view

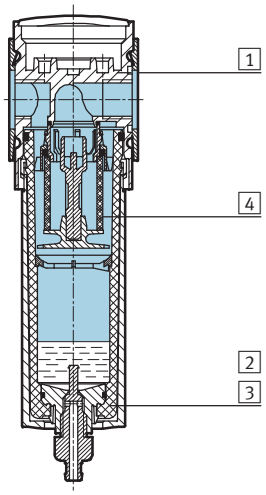

Filters		
1	Body	Die-cast aluminium
2	Plastic bowl guard	Polycarbonate/polyamide
3	Metal bowl Viewing window	Aluminium Polyamide
4	Filter element	Polyethylene
–	Seals	Nitrile rubber
	Note on materials	Free of copper and PTFE

Standard flow rate qn as a function of the differential pressure Δp1-2

MS4-LF-⅛

Grade of filtration 5 µm

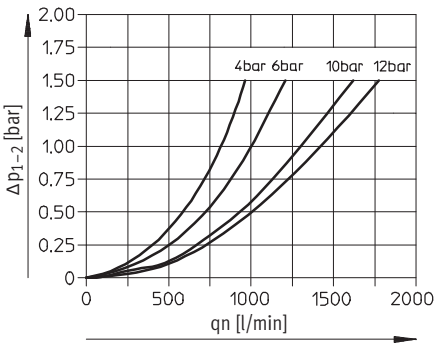

Grade of filtration 40 µm

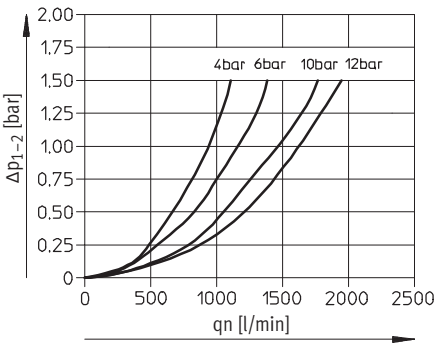

Standard flow rate qn as a function of the differential pressure Δp1-2

Grade of filtration 5 µm | Grade of filtration 40 µm

MS4-LF-¼

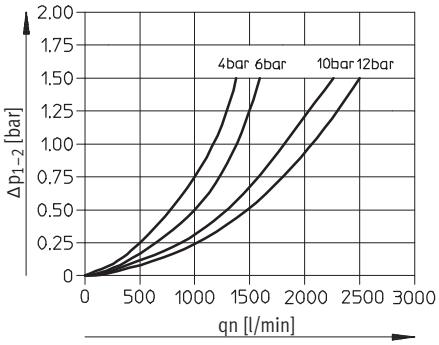

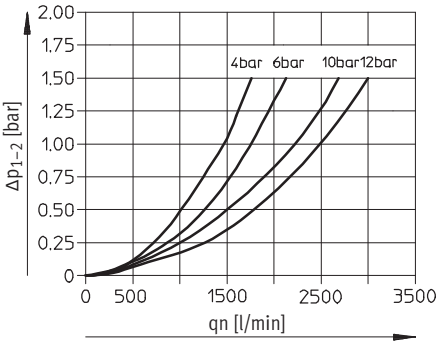

MS6-LF-¼

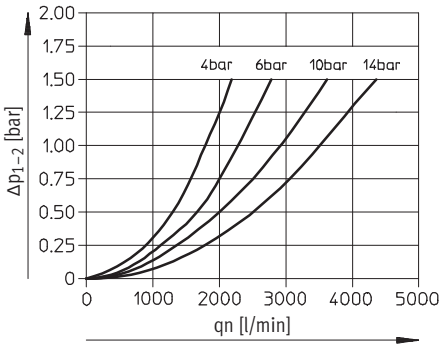

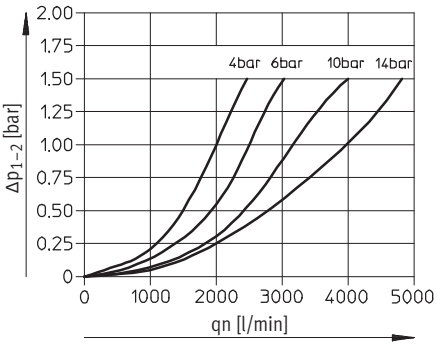

MS6-LF-⅜

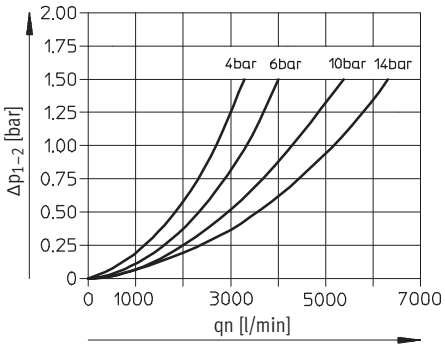

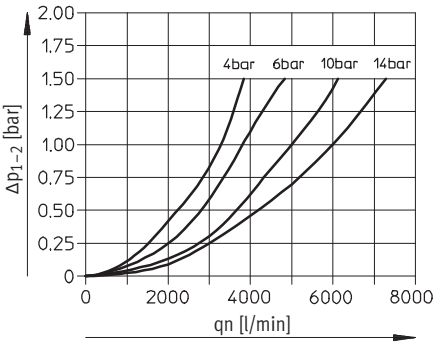

MS6-LF-½

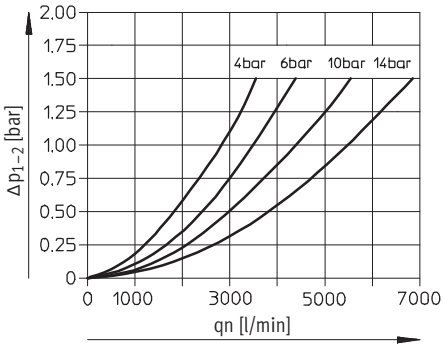

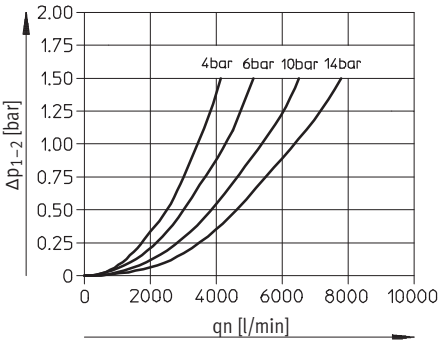

Dimensions – Standard Download CAD data ➔ **www.festo.com**

Manual rotary condensate drain

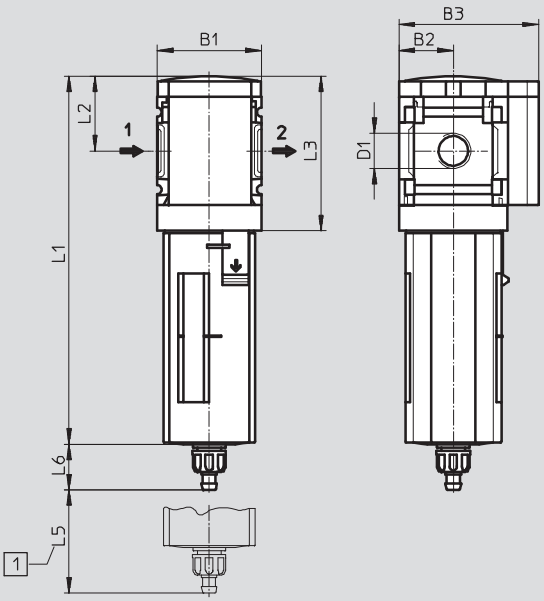

1 Installation dimensions

➔ Flow direction

Type	B1	B2	B3	D1	L1 Bowl guard		L2	L3	L5	L6 Bowl guard	
					Plastic	Metal				Plastic	Metal
MS4-LF-⅛	40	21	54	G⅛	142.8	159.4	29	60.5	25	17.7	17.7
MS4-LF-¼				G¼							
MS6-LF-¼	62	31	76	G¼	192	198	42	87	68	15.8	19
MS6-LF-⅜				G⅜							
MS6-LF-½				G½							

Note: This product conforms to ISO 1179-1 and to ISO 228-1

Dimensions – Condensate drain

Download CAD data ➔ **www.festo.com**

Manual rotary M

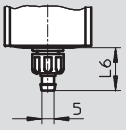

Barbed fitting for plastic tubing PCN-4

Type	L6
Plastic bowl guard	
MS4-LF-...-M	17.7
MS6-LF-...-M	15.8
Metal bowl	
MS4-LF-...-M	17.7
MS6-LF-...-M	19

Semi-automatic H

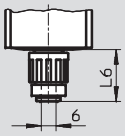

QS fitting for plastic tubing PUN-6/PAN-6

Type	L6
Plastic bowl guard	
MS4-LF-...-H	22.1
MS6-LF-...-H	20.2
Metal bowl	
MS4-LF-...-H	22.1
MS6-LF-...-H	22.8

Fully automatic V

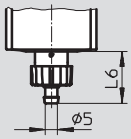

Barbed fitting for plastic tubing PCN-4

Type	L6
Plastic bowl guard	
MS4-LF-...-V	20.4
MS6-LF-...-V	18.5
Metal bowl	
MS4-LF-...-V	20.4
MS6-LF-...-V	22

Fully automatic, electrically actuated E1 ... E4

Technical data ➔ Internet: pwea

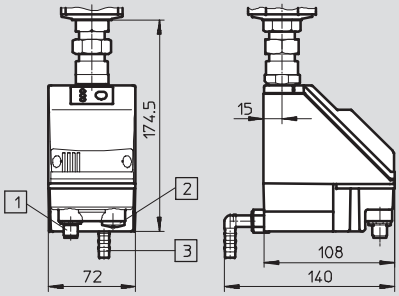

1 Variant E1
PWEA-AP-... with M12x1 plug, 5-pin for NEBU-M12...-LE5

2 Variant E2/E3/E4
PWEA-AC-... with cable conduit fitting Pg9

3 Connection 360° rotatable for plastic tubing PUN-H-12x2-...

Filters MS4/MS6-LF, MS series

Technical data

Ordering data						
Size	Condensate drain	Connection	Grade of filtration 5 µm		Grade of filtration 40 µm	
			Part No.	Type	Part No.	Type
Plastic bowl guard						
MS4	manual rotary	G⅛	529403	MS4-LF-⅛-CRM	529407	MS4-LF-⅛-ERM
		G¼	529395	MS4-LF-¼-CRM	529399	MS4-LF-¼-ERM
	fully automatic	G⅛	529405	MS4-LF-⅛-CRV	529409	MS4-LF-⅛-ERV
		G¼	529397	MS4-LF-¼-CRV	529401	MS4-LF-¼-ERV
MS6	manual rotary	G¼	529623	MS6-LF-¼-CRM	529631	MS6-LF-¼-ERM
		G⅜	529639	MS6-LF-⅜-CRM	529647	MS6-LF-⅜-ERM
		G½	529607	MS6-LF-½-CRM	529615	MS6-LF-½-ERM
	fully automatic	G¼	529625	MS6-LF-¼-CRV	529633	MS6-LF-¼-ERV
		G⅜	529641	MS6-LF-⅜-CRV	529649	MS6-LF-⅜-ERV
		G½	529609	MS6-LF-½-CRV	529617	MS6-LF-½-ERV
Metal bowl						
MS4	manual rotary	G⅛	535638	MS4-LF-⅛-CUM	535644	MS4-LF-⅛-EUM
		G¼	535654	MS4-LF-¼-CUM	535660	MS4-LF-¼-EUM
	fully automatic	G⅛	535640	MS4-LF-⅛-CUV	535642	MS4-LF-⅛-EUV
		G¼	535656	MS4-LF-¼-CUV	535658	MS4-LF-¼-EUV
MS6	manual rotary	G¼	529627	MS6-LF-¼-CUM	529635	MS6-LF-¼-EUM
		G⅜	529643	MS6-LF-⅜-CUM	529651	MS6-LF-⅜-EUM
		G½	529611	MS6-LF-½-CUM	529619	MS6-LF-½-EUM
	fully automatic	G¼	529629	MS6-LF-¼-CUV	529637	MS6-LF-¼-EUV
		G⅜	529645	MS6-LF-⅜-CUV	529653	MS6-LF-⅜-EUV
		G½	529613	MS6-LF-½-CUV	529621	MS6-LF-½-EUV

Ordering data – Wearing parts kits		
Size	Part No.	Type
MS4	673639	MS4-LF
MS6	673640	MS6-LF

Filters MS4/MS6-LF, MS series

Ordering data – Modular products

FESTO

M Mandatory data ➔

Module No.	Series	Size		Function		Connection size		Grade of filtration		Bowl
527695 527668	MS	4 6		LF		⅛, ¼, ⅜, ½, AGA, AGB, AGC, AGD, AGE		E C		R U
Order example										
527695	**MS**	**4**	–	**LF**	–	**AGB**	–	**E**	–	**R**

Ordering table

Grid dimension [mm]	40	62	Conditions	Code		Enter code
M Module No.	**527695**	**527668**				
Series	Standard			**MS**		MS
Size	4	6		**...**		
Function	Filters			**-LF**		-LF
Connection size	Thread G⅛	–		**-⅛**		
	Thread G¼	Thread G¼		**-¼**		
	–	Thread G⅜		**-⅜**		
	–	Thread G½		**-½**		
	Connecting plate G⅛	–		**-AGA**		
	Connecting plate G¼	Connecting plate G¼		**-AGB**		
	Connecting plate G⅜	Connecting plate G⅜		**-AGC**		
	–	Connecting plate G½		**-AGD**		
	–	Connecting plate G¾		**-AGE**		
Grade of filtration	40 µm			**-E**		
	5 µm			**-C**		
Bowl	Plastic bowl with plastic bowl guard			**-R**		
↓	Metal bowl			**-U**		

Transfer order code

	MS		–	**LF**	–		–		–	

➔ M Mandatory data	O Options	
Condensate drain	**Type of mounting**	**Alternative flow direction**
M H V E1 E2 E3 E4	WP WPM WB WBM	Z
– **M**	– **WP**	– **Z**

Ordering table

Grid dimension [mm]		40	62	Condi-tions	Code		Enter code
↓ M	Condensate drain	Manual			**-M**		
		Semi-automatic (P1 max. 12 bar)			**-H**		
		Fully automatic (P1 max. 12 bar)			**-V**		
		–	External fully automatic condensate drain, electrical, 24 V DC, M12	1	**-E1**		
		–	External fully automatic condensate drain, electrical, 110 V AC, terminals	1	**-E2**		
		–	External fully automatic condensate drain, electrical, 230 V AC, terminals	1	**-E3**		
		–	External fully automatic condensate drain, electrical, 24 V DC, terminals	1	**-E4**		
O	Type of mounting	Mounting bracket		2	**-WP**		
		Mounting bracket		2	**-WPM**		
		Mounting bracket			**-WB**		
		Mounting bracket	–		**-WBM**		
	Alternative flow direction	Flow direction from right to left			**-Z**		

1 **E1, E2, E3, E4** Only with metal bowl U.

2 **WP, WPM** Only with connecting plate AGA, AGB, AGC, AGD or AGE.

Transfer order code

– [ ] – [ ] – [ ]

Fine and micro filters MS4/MS6-LFM, MS series

Technical data

FESTO

Function
Condensate drain
manual rotary
without differential pressure indicator

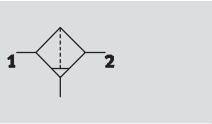

with differential pressure indicator or
filter pollution indicator

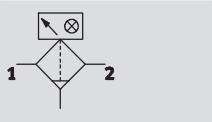

Condensate drain
semi or fully automatic
without differential pressure indicator

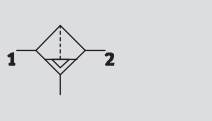

with differential pressure indicator or
filter pollution indicator

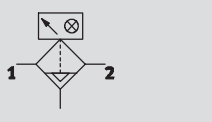

Flow rate
54 ... 3,000 l/min

Temperature range
–10 ... +60 °C

Supply pressure
0 ... 20 bar

www.festo.com
Wearing parts kits
➔ 27

- High-performance filter for exceptionally clean compressed air
- Air quality to DIN ISO 8573-1
- Available with manual, semi-automatic, fully automatic or fully automatic, electrically actuated condensate drain
- Available with differential pressure indicator for display of filter pollution
- Available with electronic filter pollution indicator
- Optionally with filter cartridge for low flow rates, suitable for sealing air and cleaning air
- Choice of filter cartridges: 0.01 µm or 1 µm
- New filter cartridges ➔ 85

Micro filter MS-LFM-A:
ISO class 1 for particles:
Max. particle density 0.1 mg/m³
ISO class 2 for oil aerosols:
Max. oil concentration 0.1 mg/m³
Filter efficiency 99.9999%

Fine filter MS-LFM-B:
ISO class 2 for particles:
Max. particle density 1 mg/m³
ISO class 3 for oil aerosols:
Max. oil concentration 1 mg/m³
Filter efficiency 99.99%

General technical data					
Size	MS4		MS6		
Pneumatic connection 1, 2	G⅛	G¼	G¼	G⅜	G½
Constructional design	Fibre filter				
Type of mounting	Via accessories				
	In-line installation				
Mounting position	Vertical ±5°				
Grade of filtration [µm]	0.01 (micro filter MS-LFM-A, air purity class at the output 1.7.2 to DIN ISO 8573-1)				
	1 (fine filter MS-LFM-B, air purity class at the output 2.7.3 to DIN ISO 8573-1)				
Bowl guard	Plastic bowl guard				
	Integrated as metal shell		Metal bowl guard		
Condensate drain	Manual rotary				
	Semi-automatic				
	Fully automatic				
	–		Fully automatic, electrically actuated		
Differential pressure indication[1)]	Visual display				
	With filter pollution indicator based on differential pressure				
Residual oil content [mg/m³]	≤0.01 (micro filter MS-LFM-A) ≤0.5 (fine filter MS-LFM-B)				
Max. condensate volume [cm³]	19 (with plastic bowl guard) 25 (with metal shell)		38		

1) Recommended max. differential pressure for changing the filter cartridge is Δp_{1-2} = 0.35 bar; for the micro filter MS6-LFM-A with range of application HP Δp_{1-2} = 0.5 bar
Note: This product conforms to ISO 1179-1 and to ISO 228-1

Fine and micro filters MS4/MS6-LFM, MS series

Technical data

FESTO

Standard flow rate q_n[1] [l/min]				
Size	MS4	MS6		
Variant	Standard	Standard	High flow rate HF	Range of application HP, suitable for sealing air and cleaning air
Micro filter MS-LFM-A				
Max. standard flow rate for air purity class $q_{n\ max}$	360	900	2,500	400
Min. standard flow rate for air purity class $q_{n\ min}$	54	135	150	60
Fine filter MS-LFM-B				
Max. standard flow rate for air purity class $q_{n\ max}$	360	950	3,000	500
Min. standard flow rate for air purity class $q_{n\ min}$	54	140	188	60

1) Measured at p1 = 6 bar.
125 l/min must be available for the fully automatic condensate drain to close correctly.

Technical data – Filter pollution indicator					
Variant		DP	DN	DPI	DNI
Pressure measuring range	[bar]	0 … +1			
Measured variable		Differential pressure; percentage value for filter pollution			
Switch output		PNP	NPN	PNP	NPN
Analogue output	[mA]	–		4 … 20	
Operating voltage range	[V DC]	15 … 30			
Max. output current	[mA]	150			
Protection class		IP65			
CE mark (see declaration of conformity)		In accordance with EU EMC directive			
		In accordance with EU Low Voltage Directive			

Operating and environmental conditions										
Variant		Condensate drain							Filter pollution indicator	
		Manual rotary M		Semi-automatic H		Fully automatic V		Fully automatic, electrically actuated E1 … E4	DP/DN/DPI/DNI	
Size		MS4	MS6	MS4	MS6	MS4	MS6	MS6	MS4	MS6
Supply pressure	[bar]	0 … 14	0 … 20	1.5 … 12	1.5 … 12	2 … 12	2 … 12	0.8 … 16	max. 10	
Operating medium for micro filter MS-LFM-A		Filtered compressed air, unlubricated, grade of filtration 1 µm								
Operating medium for fine filter MS-LFM-B		Filtered compressed air, unlubricated, grade of filtration 5 µm								
Ambient temperature	[°C]	–10 … +60		+5 … +60		+5 … +60		+1 … +60	0 … +50	
Temperature of medium	[°C]	–10 … +60		+5 … +60		+5 … +60		+1 … +60	0 … +50	
Storage temperature	[°C]	–10 … +60		–10 … +60		–10 … +60		+1 … +60	0 … +50	
Corrosion resistance class	CRC[1]	2								

1) Corrosion resistance class 2 to Festo standard 940 070
Components subject to moderate corrosion stress. Externally visible parts with primarily decorative surface requirements which are in direct contact with a normal industrial environment or media such as coolants or lubricating agents.

Fine and micro filters MS4/MS6-LFM, MS series

Technical data

Weight [g]			
Size	MS4	MS6	
Variant	Standard	Standard	High flow rate HF
Fine and micro filter with plastic bowl guard R	190	600	1,280
Fine and micro filter with metal bowl U	350	820	1,500
Fine and micro filter with metal bowl guard U and fully automatic, electrically actuated condensate drain E1 … E4	–	1,800	2,180
Filter pollution indicator	80	100	100

Materials

Sectional view

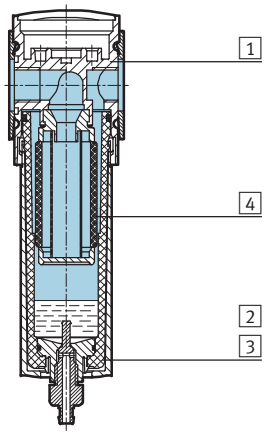

Fine and micro filters		
1	Housing	Die-cast aluminium
2	Plastic bowl guard	PC (Polycarbonate)/ PA (Polyamide)
3	Metal bowl Inspection window	Wrought aluminium alloy PA (Polyamide)
4	Filter	Borosilicate fibre
–	Seals	NBR (Nitrile rubber)
Note on materials		Free of copper and PTFE

Filter pollution indicator	
Housing	PA (Polyamide)/ POM (Reinforced polyacetate)
Adapter	PA (Reinforced polyamide)
Display	PC (Polycarbonate)
Seals	NBR (Nitrile rubber)
Note on materials	Free of copper and PTFE

Standard flow rate qn as a function of the differential pressure Δp1-2

MS4-LFM-⅛ and MS4-LFM-¼

Grade of filtration 0.01 µm

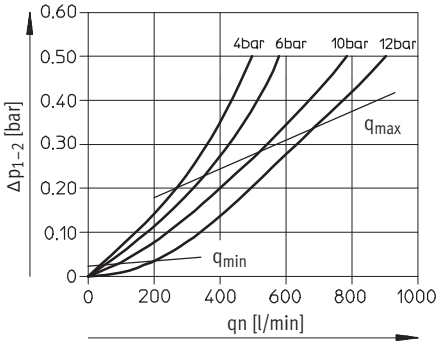

Grade of filtration 1 µm

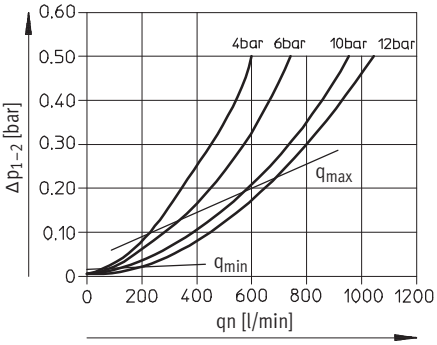

Fine and micro filters MS4/MS6-LFM, MS series

Technical data

FESTO

Standard flow rate qn as a function of the differential pressure Δp1-2

Grade of filtration 0.01 µm | Grade of filtration 1 µm

MS6-LFM-¼

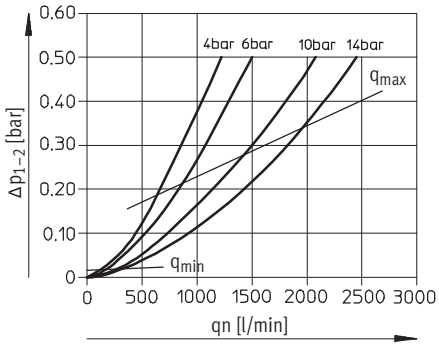

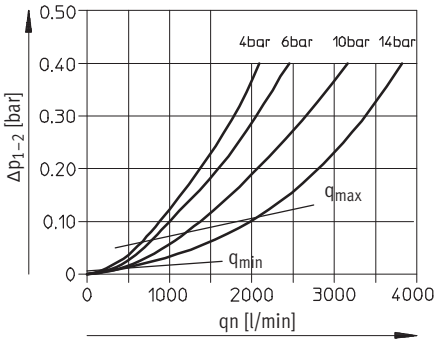

MS6-LFM-⅜

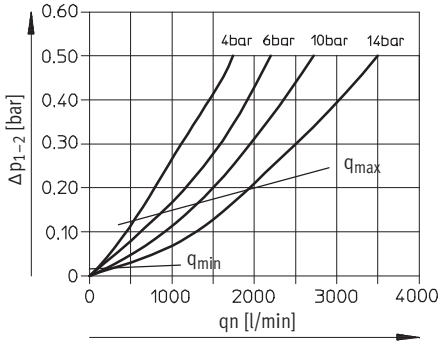

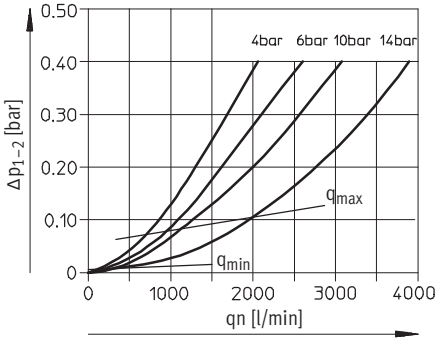

MS6-LFM-½

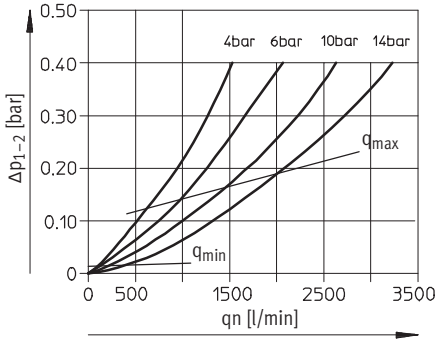

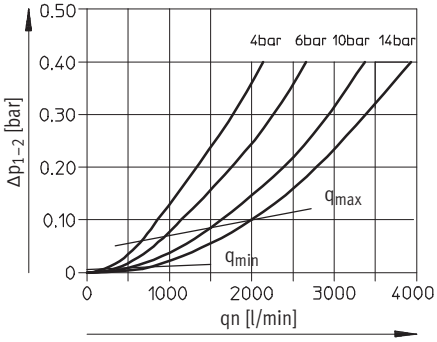

Fine and micro filters MS4/MS6-LFM, MS series

Technical data

FESTO

Standard flow rate qn as a function of the differential pressure p1-2

MS6-LFM-¼-...-HF, Grade of filtration 0.01 µm

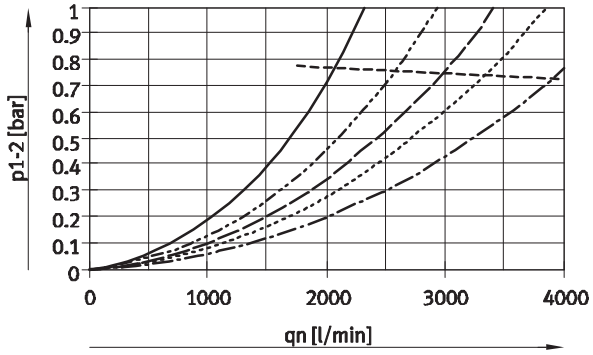

MS6-LFM-¼-...-HF, Grade of filtration 1 µm

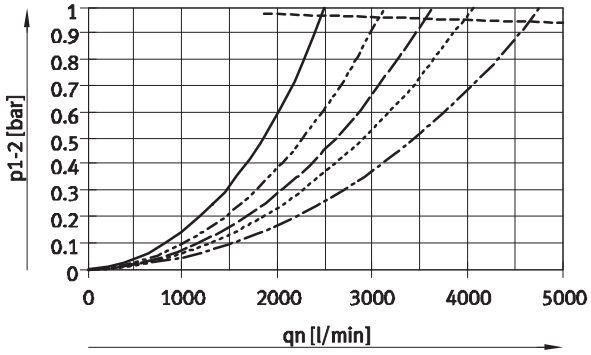

MS6-LFM-⅜-...-HF, Grade of filtration 0.01 µm

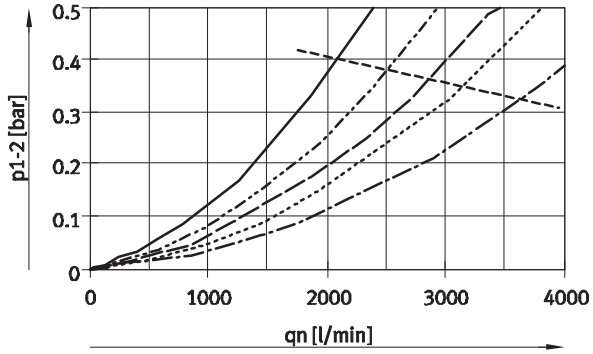

MS6-LFM-⅜-...-HF, Grade of filtration 1 µm

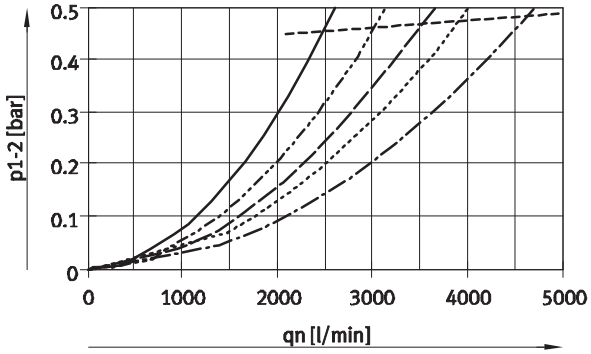

MS6-LFM-½-...-HF, Grade of filtration 0.01 µm

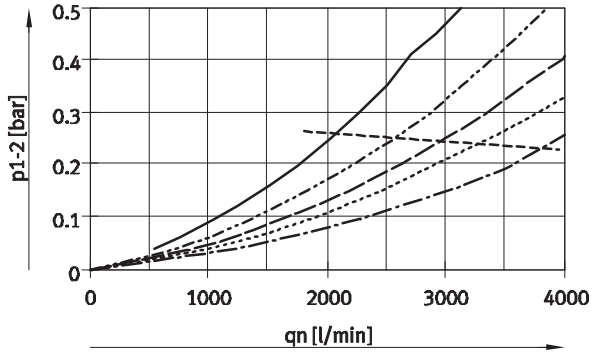

MS6-LFM-½-...-HF, Grade of filtration 1 µm

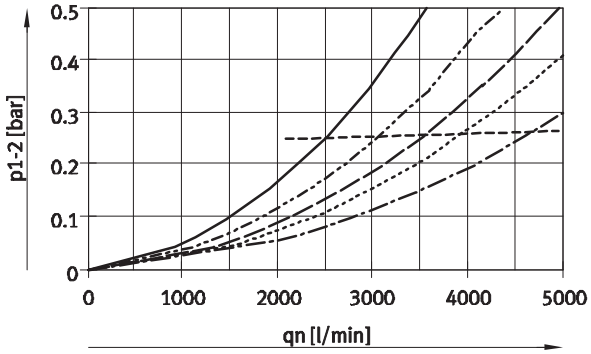

- p1: 4 bar (q_{min}: 103 l/min)
- p1: 6 bar (q_{min}: 125 l/min)
- p1: 8 bar
- p1: 10 bar (q_{min}: 162 l/min)
- p1: 14 bar (q_{min}: 192 l/min)
- q_{max}

- p1: 4 bar (q_{min}: 124 l/min)
- p1: 6 bar (q_{min}: 150 l/min)
- p1: 8 bar
- p1: 10 bar (q_{min}: 194 l/min)
- p1: 14 bar (q_{min}: 230 l/min)
- q_{max}

Fine and micro filters MS4/MS6-LFM, MS series

Technical data

FESTO

Dimensions – Standard/High flow rate HF Download CAD data ➔ **www.festo.com**

Standard, manual rotary condensate drain

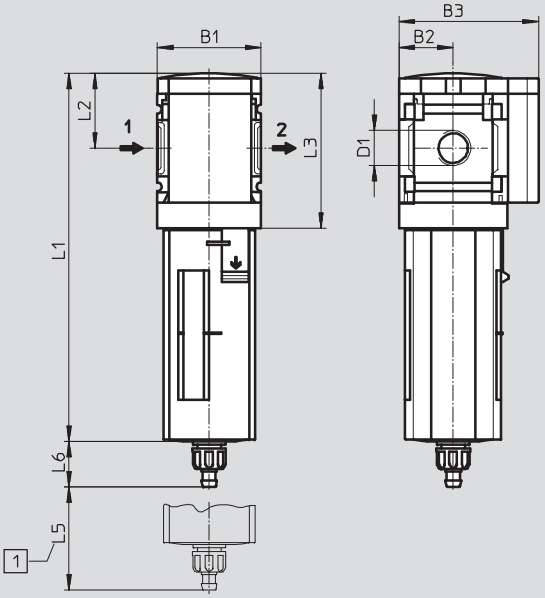

High flow rate HF, manual rotary condensate drain

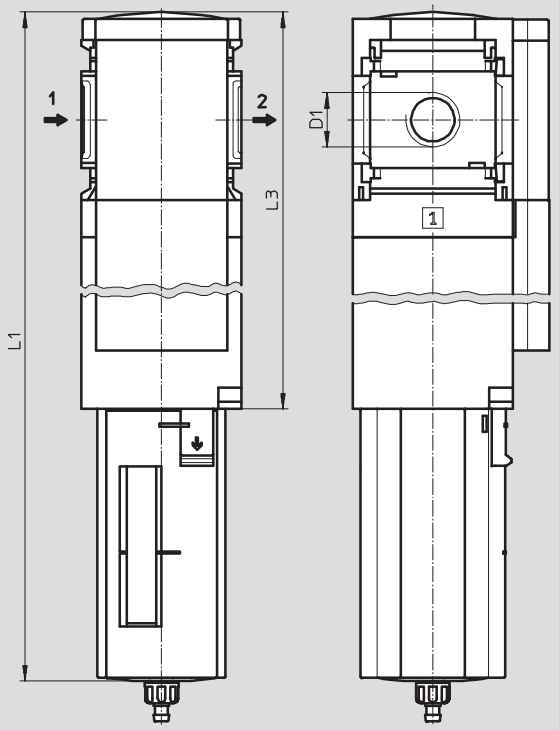

1 Installation dimensions

➔ Flow direction

Type	B1	B2	B3	D1	L1 Bowl guard Plastic	L1 Bowl guard Metal	L2	L3	L5	L6 Bowl guard Plastic	L6 Bowl guard Metal
MS4-LFM-⅛	40	21	54	G⅛	142	160	29	60	25	17.7	17.7
MS4-LFM-¼				G¼							
MS6-LFM-¼	62	31	76	G¼	192	198	42	87	75	15.8	19
MS6-LFM-⅜				G⅜							
MS6-LFM-½				G½							
MS6-LFM-¼-...-HF	62	31	76	G¼	312	318	42	207	75	15.8	19
MS6-LFM-⅜-...-HF				G⅜							
MS6-LFM-½-...-HF				G½							

Note: This product conforms to ISO 1179-1 and to ISO 228-1

Fine and micro filters MS4/MS6-LFM, MS series

Technical data

FESTO

Dimensions – Differential pressure indicator DA Download CAD data ➔ **www.festo.com**

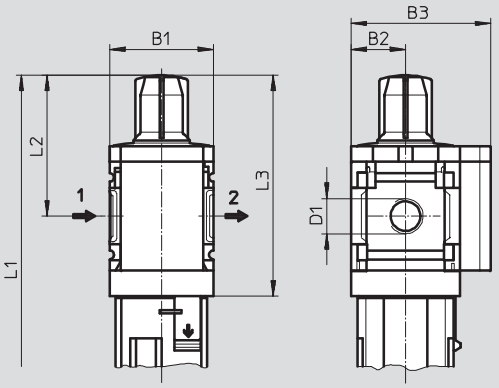

➔ Flow direction

Type	B1	B2	B3	D1	L1 Bowl guard		L2	L3
					Plastic	Metal		
MS4-LFM-⅛-...-DA	40	21	54	G⅛	168	186	55	86
MS4-LFM-¼-...-DA				G¼				
MS6-LFM-¼-...-DA	62	31	76	G¼	218	224	68	113
MS6-LFM-⅜-...-DA				G⅜				
MS6-LFM-½-...-DA				G½				
MS6-LFM-¼-...-HF-DA	62	31	76	G¼	338	344	68	113
MS6-LFM-⅜-...-HF-DA				G⅜				
MS6-LFM-½-...-HF-DA				G½				

Note: This product conforms to ISO 1179-1 and to ISO 228-1

Fine and micro filters MS4/MS6-LFM, MS series

Technical data

FESTO

Dimensions – Filter pollution indicator DP/DN/DPI/DNI Download CAD data ➔ **www.festo.com**

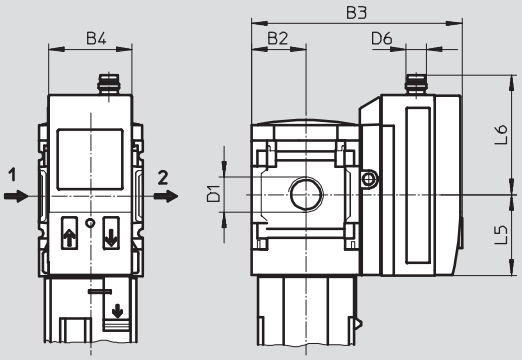

➔ Flow direction

Variant DP:
Filter pollution indicator with 3-pin M8x1 plug, 1 switch output PNP

Variant DN:
Filter pollution indicator with 3-pin M8x1 plug, 1 switch output NPN

Variant DPI:
Filter pollution indicator with 4-pin M12x1 plug, 1 switch output PNP and 4 ... 20 mA analogue

Variant DNI:
Filter pollution indicator with 4-pin M12x1 plug, 1 switch output NPN and 4 ... 20 mA analogue

Type	B2	B3	B4	D1	D6	L5	L6
MS4-LFM-⅛-...-DP/DN	21	81.8	32.3	G⅛	M8x1	32	47
MS4-LFM-¼-...-DP/DN				G¼			
MS4-LFM-⅛-...-DPI/DNI	21	81.8	32.3	G⅛	M12x1	32	56
MS4-LFM-¼-...-DPI/DNI				G¼			
MS6-LFM-¼-...-DP/DN	31	102	32.3	G¼	M8x1	32	47
MS6-LFM-⅜-...-DP/DN				G⅜			
MS6-LFM-½-...-DP/DN				G½			
MS6-LFM-¼-...-DPI/DNI	31	102	32.3	G¼	M12x1	32	56
MS6-LFM-⅜-...-DPI/DNI				G⅜			
MS6-LFM-½-...-DPI/DNI				G½			

Note: This product conforms to ISO 1179-1 and to ISO 228-1

Fine and micro filters MS4/MS6-LFM, MS series

Technical data

FESTO

Dimensions – Condensate drain Download CAD data ➔ **www.festo.com**

Manual rotary M

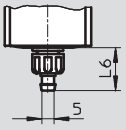

Barbed fitting for plastic tubing PCN-4

Semi-automatic H

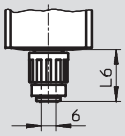

QS fitting for plastic tubing PUN-6/PAN-6

Fully automatic V

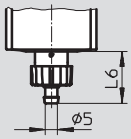

Barbed fitting for plastic tubing PCN-4

Type	L6
Plastic bowl guard	
MS4-LFM-...-M	17.7
MS6-LFM-...-M	15.8
Metal bowl	
MS4-LFM-...-M	17.7
MS6-LFM-...-M	19

Type	L6
Plastic bowl guard	
MS4-LFM-...-H	22.1
MS6-LFM-...-H	20.2
Metal bowl	
MS4-LFM-...-H	22.1
MS6-LFM-...-H	22.8

Type	L6
Plastic bowl guard	
MS4-LFM-...-V	20.4
MS6-LFM-...-V	18.5
Metal bowl	
MS4-LFM-...-V	20.4
MS6-LFM-...-V	22

Fully automatic, electrically actuated E1 ... E4 Technical data ➔ Internet: pwea

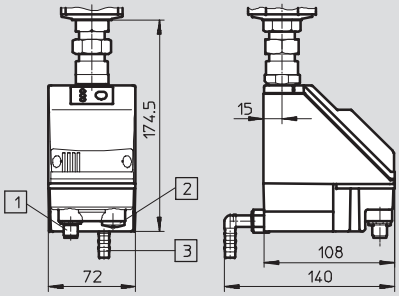

1 Variant E1
PWEA-AP-... with M12x1 plug, 5-pin for NEBU-M12...-LE5

2 Variant E2/E3/E4
PWEA-AC-... with cable conduit fitting Pg9

3 Connection 360° rotatable for plastic tubing PUN-H-12x2-...

Fine and micro filters MS4/MS6-LFM, MS series

Technical data

FESTO

Ordering data						
Without differential pressure indicator						
Size	Condensate drain	Connection	Micro filter Grade of filtration 0.01 µm		Fine filter Grade of filtration 1 µm	
			Part No.	Type	Part No.	Type
Plastic bowl guard						
MS4	Manual rotary	G⅛	529463	MS4-LFM-⅛-ARM	529465	MS4-LFM-⅛-BRM
		G¼	529459	MS4-LFM-¼-ARM	529461	MS4-LFM-¼-BRM
MS6	Manual rotary	G¼	529663	MS6-LFM-¼-ARM	529667	MS6-LFM-¼-BRM
		G⅜	529671	MS6-LFM-⅜-ARM	529675	MS6-LFM-⅜-BRM
		G½	529655	MS6-LFM-½-ARM	529659	MS6-LFM-½-BRM
	Fully automatic	G¼	530510	MS6-LFM-¼-ARV	530514	MS6-LFM-¼-BRV
		G⅜	530518	MS6-LFM-⅜-ARV	530522	MS6-LFM-⅜-BRV
		G½	530502	MS6-LFM-½-ARV	530506	MS6-LFM-½-BRV
Metal bowl						
MS4	Fully automatic	G⅛	539208	MS4-LFM-⅛-AUV	539204	MS4-LFM-⅛-BUV
		G¼	535768	MS4-LFM-¼-AUV	535766	MS4-LFM-¼-BUV
MS6	Fully automatic	G¼	529665	MS6-LFM-¼-AUV	529669	MS6-LFM-¼-BUV
		G⅜	529673	MS6-LFM-⅜-AUV	529677	MS6-LFM-⅜-BUV
		G½	529657	MS6-LFM-½-AUV	529661	MS6-LFM-½-BUV

Ordering data						
With differential pressure indicator						
Size	Condensate drain	Connection	Micro filter Grade of filtration 0.01 µm		Fine filter Grade of filtration 1 µm	
			Part No.	Type	Part No.	Type
Plastic bowl guard						
MS4	Manual rotary	G⅛	536821	MS4-LFM-⅛-ARM-DA	536817	MS4-LFM-⅛-BRM-DA
		G¼	536822	MS4-LFM-¼-ARM-DA	536818	MS4-LFM-¼-BRM-DA
MS6	Manual rotary	G¼	536869	MS6-LFM-¼-ARM-DA	536833	MS6-LFM-¼-BRM-DA
		G⅜	536870	MS6-LFM-⅜-ARM-DA	536834	MS6-LFM-⅜-BRM-DA
		G½	536871	MS6-LFM-½-ARM-DA	536835	MS6-LFM-½-BRM-DA
	Fully automatic	G¼	536875	MS6-LFM-¼-ARV-DA	536839	MS6-LFM-¼-BRV-DA
		G⅜	536876	MS6-LFM-⅜-ARV-DA	536840	MS6-LFM-⅜-BRV-DA
		G½	536877	MS6-LFM-½-ARV-DA	536841	MS6-LFM-½-BRV-DA
Metal bowl						
MS4	Fully automatic	G⅛	537213	MS4-LFM-⅛-AUV-DA	537209	MS4-LFM-⅛-BUV-DA
		G¼	537214	MS4-LFM-¼-AUV-DA	537210	MS4-LFM-¼-BUV-DA
MS6	Fully automatic	G¼	536881	MS6-LFM-¼-AUV-DA	536845	MS6-LFM-¼-BUV-DA
		G⅜	536882	MS6-LFM-⅜-AUV-DA	536846	MS6-LFM-⅜-BUV-DA
		G½	536883	MS6-LFM-½-AUV-DA	536847	MS6-LFM-½-BUV-DA
Metal bowl and high flow rate						
MS6	Fully automatic	G½	552926	MS6-LFM-½-AUV-HF-DA	552925	MS6-LFM-½-BUV-HF-DA

Ordering data – Wearing parts kits		
Size	Part No.	Type
MS4	673641	MS4-LFM
MS6	673642	MS6-LFM

Fine and micro filters MS4/MS6-LFM, MS series

Ordering data – Modular products

FESTO

M Mandatory data

Module No.	Series	Size		Function		Connection size		Grade of filtration		Bowl
527697 527670	MS	4 6		LFM		⅛, ¼, ⅜, ½, AGA, AGB, AGC, AGD, AGE		B A		R U
Ordering example										
527697	**MS**	**4**	–	**LFM**	–	**AGB**	–	**B**	–	**R**

Ordering table

Grid dimension [mm]	40	62	Condi-tions	Code		Enter code
M Module No.	**527697**	**527670**				
Series	Standard			**MS**		MS
Size	4	6		**...**		
Function	Fine and micro filter			**-LFM**		-LFM
Connection size	Thread G⅛	–		**-⅛**		
	Thread G¼	Thread G¼		**-¼**		
	–	Thread G⅜		**-⅜**		
	–	Thread G½		**-½**		
	Connecting plate G⅛	–		**-AGA**		
	Connecting plate G¼	Connecting plate G¼		**-AGB**		
	Connecting plate G⅜	Connecting plate G⅜		**-AGC**		
	–	Connecting plate G½		**-AGD**		
	–	Connecting plate G¾		**-AGE**		
Grade of filtration	1 µm			**-B**		
	0.01 µm			**-A**		
Bowl	Plastic bowl with plastic bowl guard			**-R**		
	Metal bowl			**-U**		

Transfer order code

	MS		–	**LFM**	–		–		–	

Fine and micro filters MS4/MS6-LFM, MS series

Ordering data – Modular products

FESTO

➔ M Mandatory data											O Options
	Condensate drain		Flow rate		Range of application		Filter contamination sensing		Type of mounting		Alternative flow direction
	M H V E1 E2 E3 E4		HF		HP		DA DP DN DPI DNI		WP WPM WB WBM		Z
–	M	–		–		–		–	WP	–	Z

Ordering table

Grid dimension [mm]		40	62	Conditions	Code		Enter code
↓ M	Condensate drain	Manual			-M		
		Semi-automatic (P1 max. 12 bar)			-H		
		Fully automatic (P1 max. 12 bar)		1	-V		
		–	External fully automatic condensate drain, electrical, 24 V DC, M12	2	-E1		
		–	External fully automatic condensate drain, electrical, 110 V AC, terminals	2	-E2		
		–	External fully automatic condensate drain, electrical, 230 V AC, terminals	2	-E3		
		–	External fully automatic condensate drain, electrical, 24 V DC, terminals	2	-E4		
O	Flow rate	–	High flow rate		-HF		
	Range of application	–	Suitable for sealing air and cleaning air	3	-HP		
	Filter contamination sensing	Differential pressure indicator, visual			-DA		
		Filter contamination indicator, M8 plug, PNP, 3-pin		4	-DP		
		Filter contamination indicator, M8 plug, NPN, 3-pin		4	-DN		
		Filter contamination indicator, M12 plug, PNP, 4-pin, analogue output 4 ... 20 mA		4	-DPI		
		Filter contamination indicator, M12 plug, PNP, 4-pin, analogue output 4 ... 20 mA		4	-DNI		
	Type of mounting	Mounting bracket		5	-WP		
		Mounting bracket		5	-WPM		
		Mounting bracket			-WB		
		Mounting bracket	–		-WBM		
	Alternative flow direction	Flow direction from right to left			-Z		

1 **V** Size 4: only with metal bowl U

2 **E1, E2, E3, E4** Only with metal bowl U

3 **HP** Not with flow rate HF or filter contamination sensing DA

4 **DP, DN, DPI, DNI** Measuring range max. 10 bar

5 **WP, WPM** Only with connecting plate AGA, AGB, AGC, AGD or AGE

Transfer order code

– [ ] – [ ] – [ ] – [ ] – [ ] – [ ]

Active carbon filters MS4/MS6-LFX, MS series

Technical data

FESTO

Function

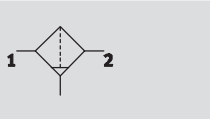

Flow rate
max. 2,500 l/min

Temperature range
–10 ... +60 °C

Input pressure
0 ... 20 bar

Note

Prefiltration with micro filter MS-LFM-A, grade of filtration 0.01 µm, recommended.

- Removal of liquid and gaseous oil particles from compressed air using active carbon
- Eliminates odours and vapours
- Optionally with filter cartridge for low flow rates, suitable for sealing air and cleaning air
- New filter cartridges ➔ 85

General technical data					
Size	MS4		MS6		
Pneumatic connection 1, 2	G⅛	G¼	G¼	G⅜	G½
Design	Active carbon filter				
Type of mounting	Via accessories				
	In-line installation				
Assembly position	Vertical ±5°				
Air purity class at the output[1]	1.7.1 to DIN ISO 8573-1				
Bowl guard	Plastic bowl guard				
	Integrated as metal shell		Metal bowl guard		
Residual oil content [mg/m³]	≤0.003				

1) We recommend that the filter cartridge be replaced by a new one after 1,000 operating hours. (Applies to an ambient temperature of 21 °C. At higher temperatures the service life of the filter cartridge will be reduced.)
Note: This product conforms to ISO 1179-1 and to ISO 228-1

Standard flow rate q_n[1] [l/min]				
Size	MS4	MS6		
Variant	Standard	Standard	High flow rate HF	Range of application HP, suitable for sealing air and cleaning air
Max. standard flow rate for air purity class $q_{n\ max}$	360	900	2,500	900

1) Measured at p1 = 6 bar.

Active carbon filters MS4/MS6-LFX, MS series

Technical data

Operating and environmental conditions			
Size		MS4	MS6
Input pressure	[bar]	0 … 14	0 … 20
Operating medium		Compressed air, filtered, unlubricated, grade of filtration 0.01 µm	
Ambient temperature	[°C]	–10 … +60	
Temperature of medium	[°C]	+5 … +30	
Storage temperature	[°C]	–10 … +60	
Corrosion resistance	CRC[1)]	2	

1) Corrosion resistance class 2 according to Festo standard 940 070
Components requiring moderate corrosion resistance. Externally visible parts with primarily decorative surface requirements which are in direct contact with a normal industrial environment or media such as coolants or lubricating agents.

Weights [g]			
Size	MS4	MS6	
Variant	Standard	Standard	High flow rate HF
Active carbon filter with plastic bowl guard R	190	600	1,280
Active carbon filter with metal bowl U	350	820	1,500

Materials

Sectional view

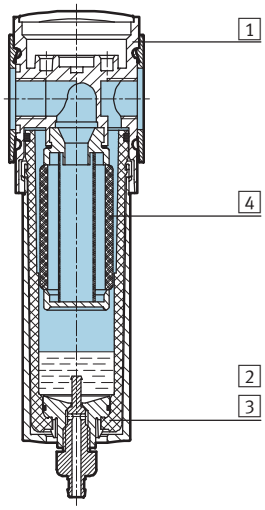

Active carbon filter		
1	Body	Die-cast aluminium
2	Plastic bowl guard	PC (Polycarbonate)/ PA (Polyamide)
3	Metal bowl Viewing window	Wrought aluminium alloy PA (Polyamide)
4	Filters	Active carbon
–	Seals	NBR (Nitrile rubber)
Note on materials		Free of copper and PTFE

Active carbon filters MS4/MS6-LFX, MS series

Technical data

FESTO

Standard flow rate qn as a function of the differential pressure Δp1-2

MS4-LFX-⅛ and MS4-LFX-¼

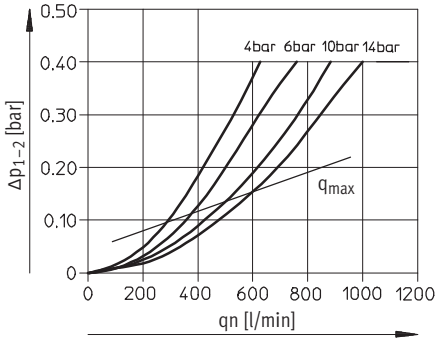

MS6-LFX-¼

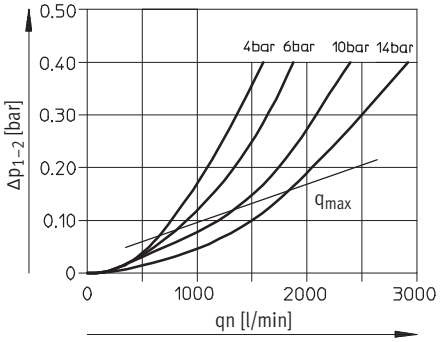

MS6-LFX-⅜

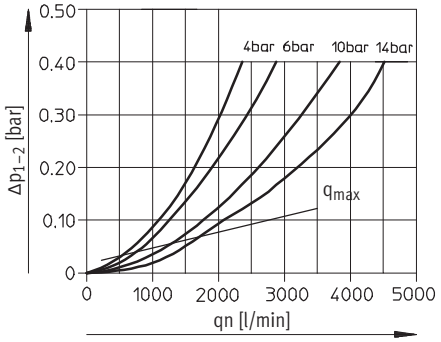

MS6-LFX-½

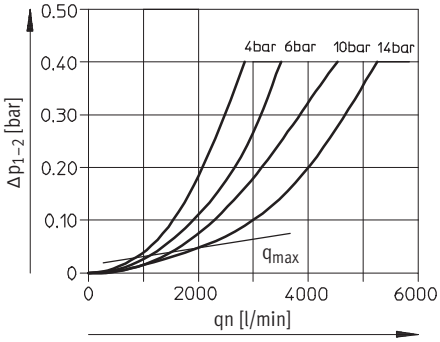

Active carbon filters MS4/MS6-LFX, MS series

Technical data

FESTO

Standard flow rate qn as a function of the differential pressure p1-2

MS6-LFX-¼-...-HF

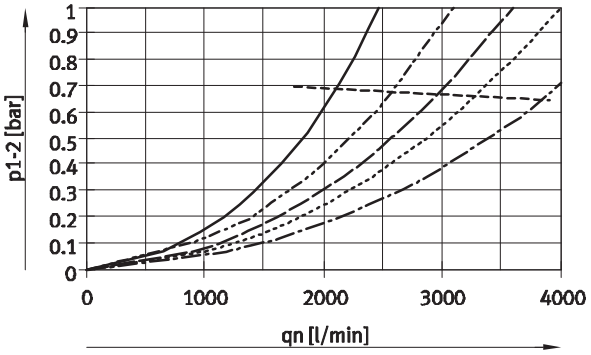

MS6-LFX-⅜-...-HF

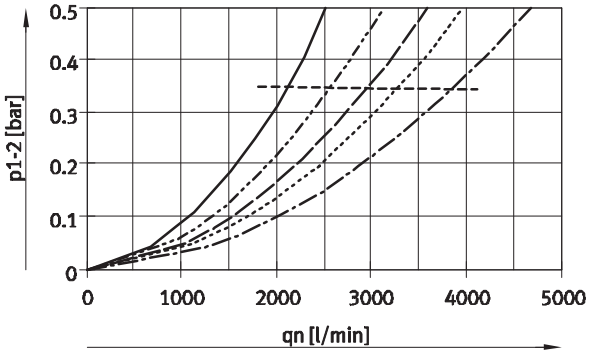

MS6-LFX-½-...-HF

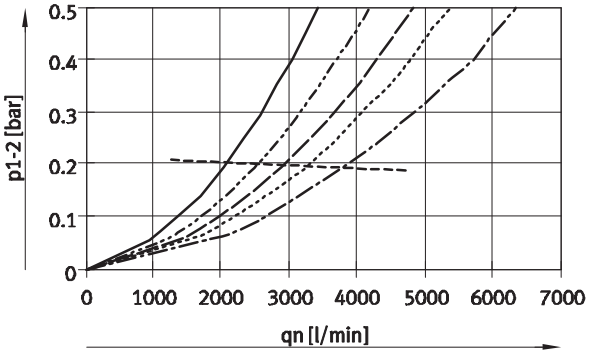

- p1: 4 bar
- p1: 6 bar
- p1: 8 bar
- p1: 10 bar
- p1: 14 bar
- q_{max}

Active carbon filters MS4/MS6-LFX, MS series

Technical data

FESTO

Dimensions – Standard/High flow rate HF Download CAD data ➔ **www.festo.com**

Standard High flow rate HF

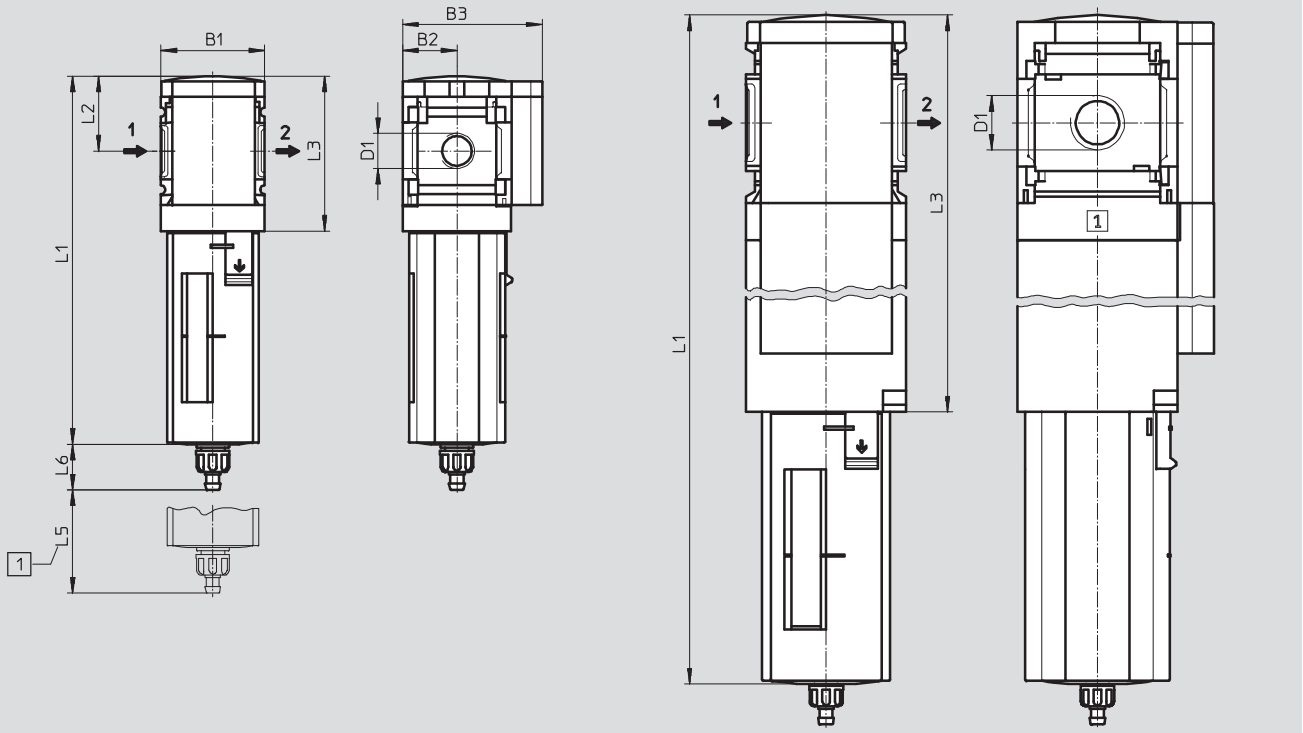

1 Installation dimensions

➔ Flow direction

Type	B1	B2	B3	D1	L1 Bowl guard Plastic	L1 Bowl guard Metal	L2	L3	L5	L6 Bowl guard Plastic	L6 Bowl guard Metal
MS4-LFX-⅛	40.2	21	54	G⅛	142.8	160.4	29	60	75	17.7	18
MS4-LFX-¼				G¼							
MS6-LFX-¼	62	31	76	G¼	192	198	42	87	100	15.8	19
MS6-LFX-⅜				G⅜							
MS6-LFX-½				G½							
MS6-LFX-¼-...-HF	62	31	76	G¼	312	318	42	207	100	15.8	19
MS6-LFX-⅜-...-HF				G⅜							
MS6-LFX-½-...-HF				G½							

Note: This product conforms to ISO 1179-1 and to ISO 228-1

Ordering data

Size	Connection	Plastic bowl guard Part No.	Plastic bowl guard Type	Metal bowl Part No.	Metal bowl Type
MS4	G⅛	**536707**	**MS4-LFX-⅛-R**	**536709**	**MS4-LFX-⅛-U**
	G¼	**529467**	**MS4-LFX-¼-R**	**535782**	**MS4-LFX-¼-U**
MS6	G¼	**529683**	**MS6-LFX-¼-R**	**529685**	**MS6-LFX-¼-U**
	G⅜	**529687**	**MS6-LFX-⅜-R**	**529689**	**MS6-LFX-⅜-U**
	G½	**529679**	**MS6-LFX-½-R**	**529681**	**MS6-LFX-½-U**
High flow rate					
MS6	G½	–	–	**552927**	**MS6-LFX-½-U-HF**

Activated carbon filters MS4/MS6-LFX, MS series

Ordering data – Modular products

FESTO

M Mandatory data																							
Module No.		Series		Size		Function		Connection size		Bowl		Flow rate		Range of application		Type of mounting		Alternative flow direction
527699 527672		MS		4 6		LFX		⅛, ¼, ⅜, ½, AGA, AGB, AGC, AGD, AGE		R U		HF		HP		WP WPM WB WBM		Z
Ordering example																		
527699		**MS**		**4**	–	**LFX**	–	**AGB**	–	**R**	–		–		–	**WP**	–	**Z**

Ordering table

Grid dimension [mm]		40	62	Conditions	Code		Enter code
M	Module No.	**527699**	**527672**				
	Series	Standard			**MS**		MS
	Size	4	6		**...**		
	Function	Activated carbon filter			**-LFX**		-LFX
	Connection size	Thread G⅛	–		**-⅛**		
		Thread G¼	Thread G¼		**-¼**		
		–	Thread G⅜		**-⅜**		
		–	Thread G½		**-½**		
		Connecting plate G⅛	–		**-AGA**		
		Connecting plate G¼	Connecting plate G¼		**-AGB**		
		Connecting plate G⅜	Connecting plate G⅜		**-AGC**		
		–	Connecting plate G½		**-AGD**		
		–	Connecting plate G¾		**-AGE**		
	Bowl	Plastic bowl with plastic bowl guard			**-R**		
		Metal bowl			**-U**		
O	Flow rate	–	High flow rate		**-HF**		
	Range of application	–	Suitable for sealing air and cleaning air	1	**-HP**		
	Type of mounting	Mounting bracket		2	**-WP**		
		Mounting bracket		2	**-WPM**		
		Mounting bracket			**-WB**		
		Mounting bracket	–		**-WBM**		
	Alternative flow direction	Flow direction from right to left			**-Z**		

1 **HP** Not with flow rate HF
2 **WP, WPM** Only with connecting plate AGA, AGB, AGC, AGD or AGE

Transfer order code

		MS		–	**LFX**	–		–		–		–		–		–		

Filters MS9-LF, MS series

Peripherals overview

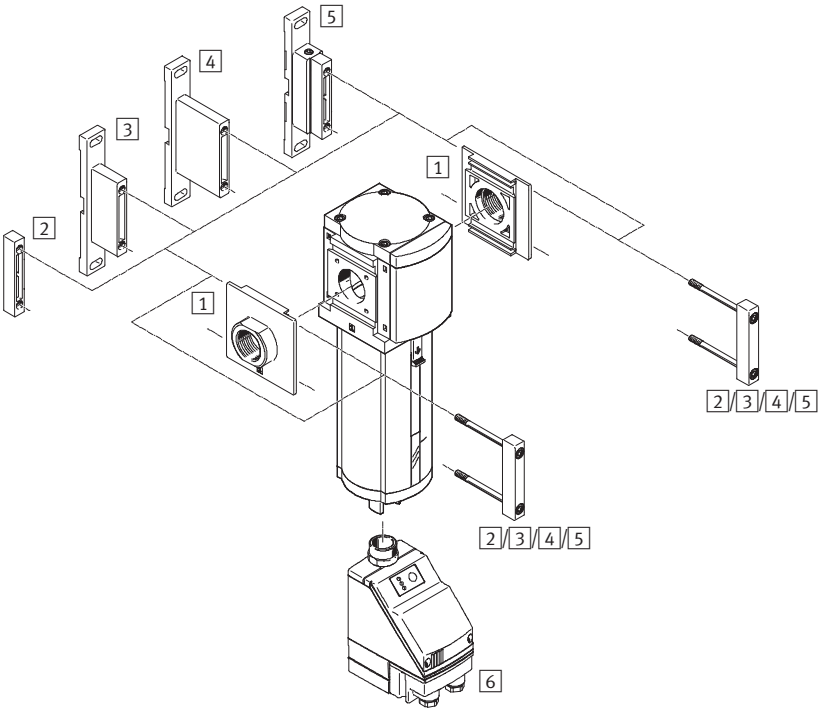

Note

Additional accessories:

– Module connector for combination with size MS6 or size MS12
➔ Internet: armv

Mounting attachments and accessories				
	Individual device		Combination	➔ Page/Internet
	without connecting thread	with connecting thread ¾ or 1		
1 Connecting plate MS9-AG...	■	–	■	ms9-ag
2 Module connector MS9-MV	■	–	■	ms9-mv
3 Mounting bracket MS9-WP	■	■	■	ms9-wp
4 Mounting bracket MS9-WPB	■	■	■	ms9-wp
5 Mounting bracket MS9-WPM	■	–	■	ms9-wp
6 Condensate drain, fully automatic, electrically actuated E1/E2/E3/E4	■	■	■	42

Filters MS9-LF, MS series

Type codes

MS	9	–	LF	–	G	–	E	U	M

Series	
MS	Standard service unit

Size	
9	Grid dimension 90 mm

Service function	
LF	Filter

Connection size	
G	Module without connecting thread, without connecting plate

Grade of filtration	
C	5 µm
E	40 µm

Bowl guard	
U	Metal bowl

Condensate drain	
M	Manual rotary
V	Fully automatic

Additional variants can be ordered using the modular system ➔ 42

- Connecting plates
- Condensate drain
- Type of mounting
- Alternative flow direction

Filters MS9-LF, MS series

Technical data

FESTO

Function
Condensate drain,
manual rotary

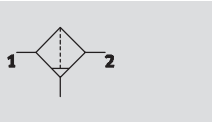

Condensate drain,
semi or fully automatic

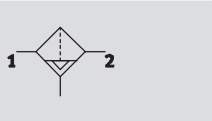

Flow rate
6,000 ... 16,000 l/min

Temperature range
–10 ... +60 °C

Supply pressure
0 ... 16 bar

- Good particle and condensate separation
- High flow rate with minimal pressure drop
- Available with manual, semi-automatic, fully automatic or fully automatic, electrically actuated condensate drain
- Choice of filter cartridges: 5 µm or 40 µm
- New filter cartridges ➔ 86

General technical data				
Size	MS9			
Pneumatic connection 1, 2	G¾	G1	G1½ ... G1½ (with connecting plate AG...)	– (without connecting thread G)
Design	Sintered filter with centrifugal separator			
Type of mounting	Via accessories			
	In-line installation			
Mounting position	Vertical ±5°			
Grade of filtration [µm]	5, air quality class at the output 3.7.– to DIN ISO 8573-1			
	40, air quality class at the output 5.7.– to DIN ISO 8573-1			
Bowl guard	Metal bowl			
Condensate drain	Manual rotary			
	Semi-automatic			
	Fully automatic			
	Fully automatic, electrically actuated			
Max. condensate volume [ml]	220			

Note: This product conforms to ISO 1179-1 and to ISO 228-1

Standard nominal flow rate qnN[1] [l/min]				
Pneumatic connection		Connecting plate AGD	Thread G¾ or connecting plate AGE	Thread G1 or connecting plate AGF/AGG/AGH
Grade of filtration	5 µm	6,000	8,500	9,500
	40 µm	8,000	12,500	16,000

1) Measured at p1 = 6 bar and Δp = 1 bar

Filters MS9-LF, MS series

Technical data

FESTO

Operating and environmental conditions					
Condensate drain		Manual rotary M	Semi-automatic H	Fully automatic V	Fully automatic, electrically actuated E1/E2/E3/E4
Supply pressure	[bar]	0 … 20	1.5 … 12	2 … 12	0.8 … 16
Operating medium		Compressed air, air quality class 5.7.– to DIN ISO 8573-1			
Ambient temperature	[°C]	–10 … +60	+5 … +60	+5 … +60	+1 … +60
Temperature of medium	[°C]	–10 … +60	+5 … +60	+5 … +60	+1 … +60
Storage temperature	[°C]	–10 … +60	+5 … +60	+5 … +60	+1 … +60
Corrosion resistance class CRC[1)]		2			

1) Corrosion resistance class 2 according to Festo standard 940 070
Components subject to moderate corrosion stress. Externally visible parts with primarily decorative surface requirements which are in direct contact with a normal industrial environment or media such as coolants or lubricating agents.

Weight [g]	
Filter	2,000
Filter with condensate drain, fully automatic, electrically actuated E1/E2/E3/E4	2,400

Materials

Sectional view

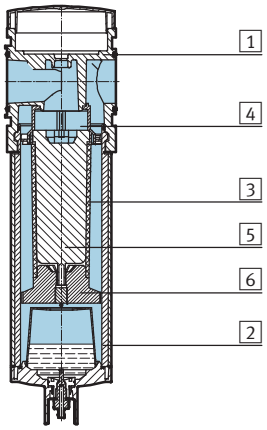

Filter		
1	Housing	Die-cast aluminium
2	Bowl Inspection window	Wrought aluminium alloy Polyamide
3	Filter	Polyethylene
4	Spin disc	Polyacetal
5	Filter holder	Polyacetal
6	Separating plate	Polyacetal
–	Seals	Nitrile rubber
Note on materials		RoHS-compliant (not with variant E1, E2, E3 or E4)

Standard flow rate qn as a function of differential pressure Δp1-2

Grade of filtration 5 µm
MS9-LF-1/AGF, pneumatic connection G1

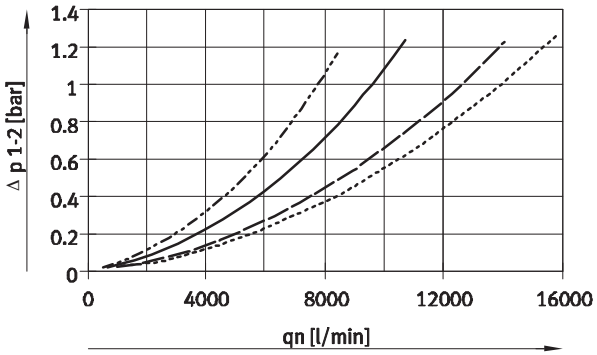

Grade of filtration 40 µm
MS9-LF-1/AGF, pneumatic connection G1

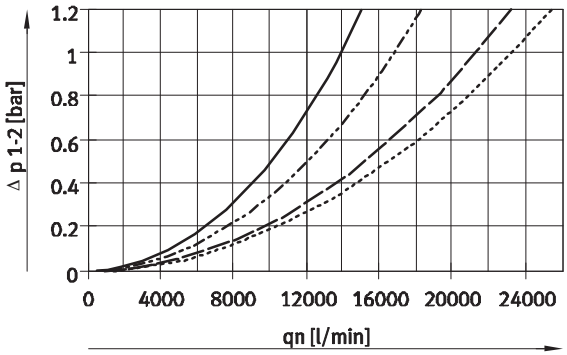

4 bar
6 bar
10 bar
12 bar

Filters MS9-LF, MS series

Technical data

FESTO

Dimensions – Basic version

Download CAD data ➔ **www.festo.com**

Without connecting thread G

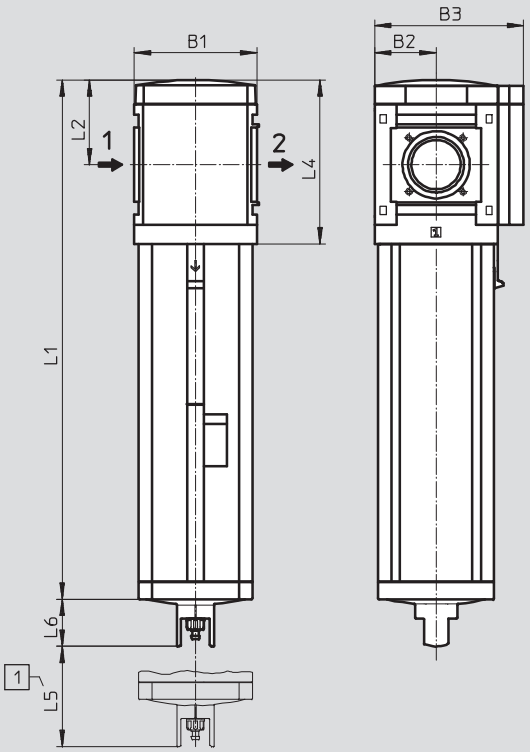

1 Installation dimensions

➔ Flow direction

Type	B1	B2	B3	L1	L2	L4	L5	L6
MS9-LF-G	90	45	109	310.5	62	120	150	34.5

Dimensions – Connecting thread/connecting plate

Download CAD data ➔ **www.festo.com**

With connecting thread ¾ or 1

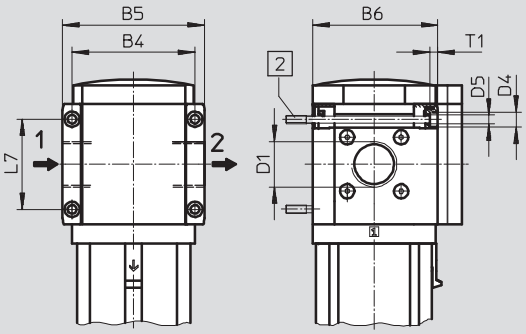

2 Mounting screw M6xmin.90 to DIN 912 (not included in the scope of delivery) for wall mounting without mounting bracket

With connecting plate AG...

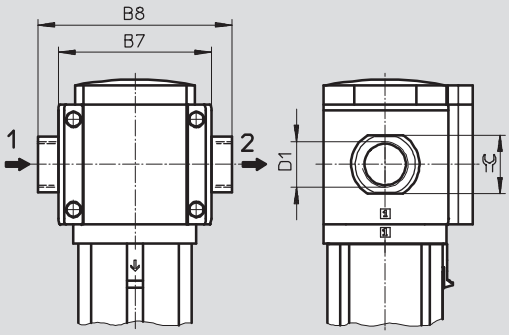

➔ Flow direction

Type	B4	B5	B6	B7	B8	D1	D4	D5	L7	T1	⬡
MS9-LF-¾	90	104	91.5	–	–	G¾	11	6.5	66	6	–
MS9-LF-1						G1					
MS9-LF-AGD	–	–	–	112	132	G½	–	–	–	–	30
MS9-LF-AGE					132	G¾					36
MS9-LF-AGF					142	G1					41
MS9-LF-AGG					162	G1¼					50
MS9-LF-AGH					176	G1½					55

Note: This product conforms to ISO 1179-1 and to ISO 228-1

Filters MS9-LF, MS series

Technical data

FESTO

Dimensions – Condensate drain

Download CAD data ➔ **www.festo.com**

Manual rotary M/fully automatic V

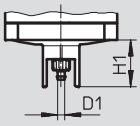

Barbed fitting for plastic tubing PCN-4

Semi-automatic H

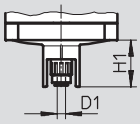

QS connector for plastic tubing PUN-6/PAN-6

Fully automatic, electrically actuated E1/E2/E3/E4

Technical data ➔ Internet: pwea

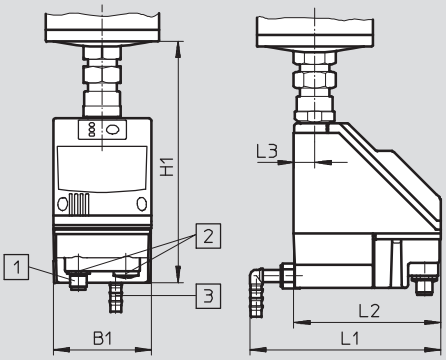

1 Variant E1:
Condensate drain PWEA-AP with M12x1 plug, 5-pin for NEBU-M12...-LE5

2 Variant E2/E3/E4:
Condensate drain PWEA-AC with cable connector Pg9

3 Connection 360° rotatable for plastic tubing PUN-H-12x2

Type	B1	D1	H1	L1	L2	L3
MS9-LF-...M/V	–	5	34.5	–	–	–
MS9-LF-...H		6				
MS9-LF-...E1/E2/E3/E4	72	–	178	140	108	15

Ordering data

Size	Condensate drain	Connection	Grade of filtration 5 µm		Grade of filtration 40 µm	
			Part No.	Type	Part No.	Type
MS9	Manual rotary	–	**564108**	**MS9-LF-G-CUM**	**564106**	**MS9-LF-G-EUM**
	Fully automatic	–	**564109**	**MS9-LF-G-CUV**	**564107**	**MS9-LF-G-EUV**

Filters MS9-LF, MS series

Ordering data – Modular products

FESTO

M Mandatory data ➔

Module No.	Series	Size		Function		Connection size		Grade of filtration		Bowl
562532	MS	9		LF		¾, 1, AGD, AGE, AGF, AGG, AGH, G		E, C		U
Ordering example										
562532	**MS**	**9**	–	**LF**	–	**AGD**	–	**E**	–	**U**

Ordering table

Grid dimension [mm]		90	Conditions	Code		Enter code
M	Module No.	**562532**				
	Series	Standard		**MS**		MS
	Size	9		**9**		9
	Function	Filter		**-LF**		-LF
	Connection size	Thread G¾		**-¾**		
		Thread G1		**-1**		
		Connecting plate G½		**-AGD**		
		Connecting plate G¾		**-AGE**		
		Connecting plate G1		**-AGF**		
		Connecting plate G1¼		**-AGG**		
		Connecting plate G1½		**-AGH**		
		Module without connecting thread, without connecting plate		**-G**		
	Grade of filtration	40 µm		**-E**		
		5 µm		**-C**		
↓	Bowl	Metal bowl		**-U**		-U

Transfer order code

562532	**MS**	**9**	–	**LF**	–		–		–	**U**

Filters MS9-LF, MS series

Ordering data – Modular products

FESTO

➔ M Mandatory data	O Options	
Condensate drain	**Type of mounting**	**Alternative flow direction**
M, H, V, E1 … E4	WP, WPM, WPB	Z
– **M**	– **WP**	– **Z**

Ordering table

Grid dimension [mm]		90	Conditions	Code		Enter code
↓ M	Condensate drain	Manual		**-M**		
		Semi-automatic (P1 max. 12 bar)		**-H**		
		Fully automatic (P1 max. 12 bar)		**-V**		
	External, fully automatic, electric	24 V DC, M12 (P1 max. 16 bar)		**-E1**		
		110 V AC, terminals (P1 max. 16 bar)		**-E2**		
		230 V AC, terminals (P1 max. 16 bar)		**-E3**		
		24 V DC, terminals (P1 max. 16 bar)		**-E4**		
O	Type of mounting	Mounting bracket	1	**-WP**		
		Mounting bracket	1	**-WPM**		
		Mounting bracket for large wall gap	1	**-WPB**		
	Alternative flow direction	Flow direction from right to left		**-Z**		

1 **WP, WPM, WPB** Not with module G

Transfer order code

– [ ] – [ ] – [ ]

Fine and micro filters MS9-LFM, MS series

Peripherals overview

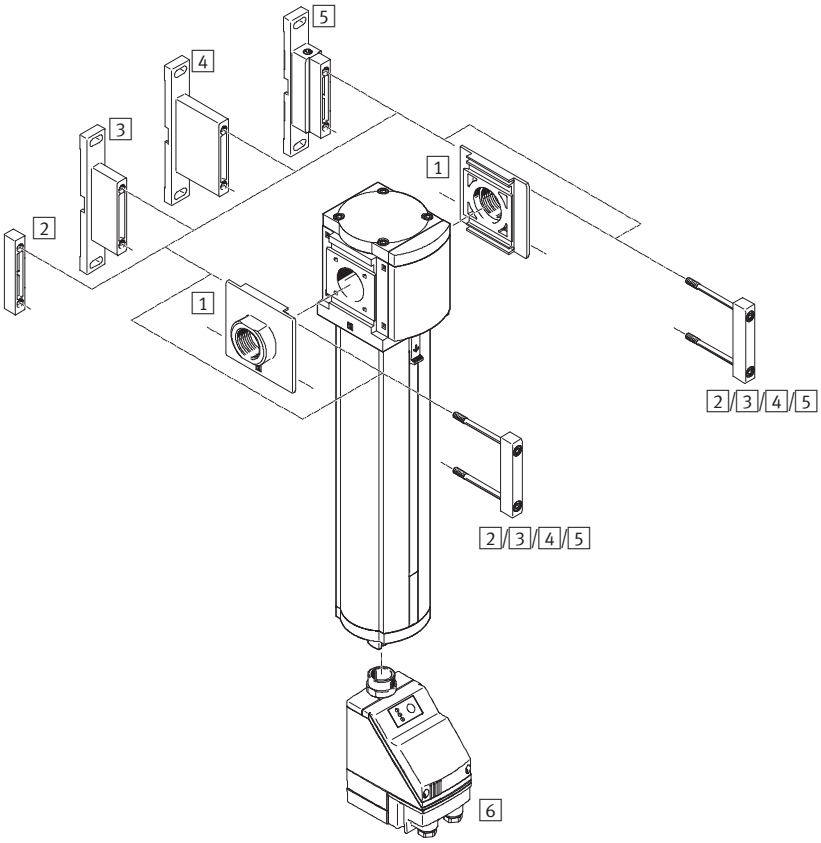

Note

Other accessories:
- Module connector for combination with size MS6 or size MS12
  ➔ Internet: armv

Mounting attachments and accessories				
	Individual device		Combination	➔ Page/Internet
	without connecting thread	with connecting thread ¾ or 1		
1 Connecting plate MS9-AG...	■	–	■	ms9-ag
2 Module connector MS9-MV	■	–	■	ms9-mv
3 Mounting bracket MS9-WP	■	■	■	ms9-wp
4 Mounting bracket MS9-WPB	■	■	■	ms9-wp
5 Mounting bracket MS9-WPM	■	–	■	ms9-wp
6 Condensate drain, fully automatic, electrically actuated E1/E2/E3/E4	■	■	■	54

Fine and micro filters MS9-LFM, MS series

Type codes

MS	9	–	LFM	–	1	–	A	U	M	–	HF	–	DA

Series	
MS	Standard service unit

Size	
9	Grid dimension 90 mm

Service function	
LFM	Fine and micro filter

Pneumatic connection	
¾	Thread G¾
1	Thread G1
G	Module without connecting thread, without connecting plate

Grade of filtration	
A	0.01 µm
B	1 µm

Bowl guard	
U	Metal bowl guard

Condensate drain	
M	Manual rotary
V	Fully automatic

Flow rate	
	Standard
HF	High flow rate

Filter contamination sensor	
	Without differential pressure indicator
DA	Differential pressure indicator

Further variants can be ordered using the modular system ➔ 54

- Connecting plates
- Condensate drain
- Type of mounting
- Alternative flow direction

Fine and micro filters MS9-LFM, MS series

Technical data

FESTO

Function
Condensate drain
Manual rotary
Without differential pressure indicator

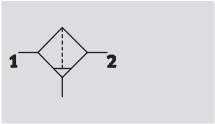

With differential pressure indicator

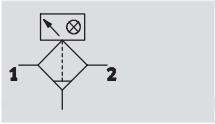

Condensate drain
Semi or fully automatic
Without differential pressure indicator

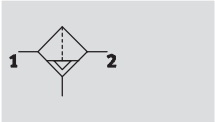

With differential pressure indicator

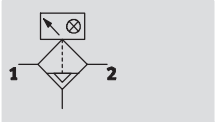

Flow rate
325 ... 10,000 l/min

Temperature range
–10 ... +60 °C

Supply pressure
0 ... 20 bar

- High-performance filter for exceptionally clean compressed air
- Air quality to DIN ISO 8573-1
- Available with manual, semi-automatic, fully automatic or fully automatic, electrically actuated condensate drain
- Available with differential pressure indicator for indication of contamination
- Choice of filter cartridges: 0.01 µm or 1 µm
- New filter cartridges ➔ 86

MS9-LFM-A:
ISO class 1 for particles:
max. particle density 0.1 mg/m³
ISO class 2 for oil aerosols:
max. oil concentration 0.1 mg/m³
Filter efficiency 99.9999%

MS9-LFM-B:
ISO class 2 for particles:
max. particle density 1 mg/m³
ISO class 3 for oil aerosols:
max. oil concentration 1 mg/m³
Filter efficiency 99.99%

General technical data				
Size	MS9			
Pneumatic connection 1, 2	G¾	G1	G1½ ... G1½ (with connecting plate AG...)	– (without connecting thread G)
Constructional design	Fibre filter			
Type of mounting	Via accessories			
	In-line installation			
Installation position	Vertical ±5°			
Grade of filtration [µm]	0.01 (micro filter MS9-LFM-A, air purity class at the output 1.7.2 to DIN ISO 8573-1)			
	1 (fine filter MS9-LFM-B, air purity class at the output 2.7.3 to DIN ISO 8573-1)			
Bowl guard	Metal bowl guard			
Condensate drain	Manual rotary			
	Semi-automatic			
	Fully automatic			
	Fully automatic, electrically actuated			
Differential pressure indicator	Visual indicator			
Residual oil content [mg/m³]	≤0.01 (micro filter MS9-LFM-A) ≤0.5 (fine filter MS9-LFM-B)			
Max. condensate volume [cm³]	225			

Note: This product conforms to ISO 1179-1 and to ISO 228-1

Fine and micro filters MS9-LFM, MS series

Technical data

Standard flow rate qn[1] [l/min]		
Version	Standard	High flow rate HF
Micro filter MS9-LFM-A		
qn min	325	390
qn max	6,500	7,800
Fine filter MS9-LFM-B		
qn min	350	500
qn max	7,000	10,000

1) Measured at p1 = 6 bar

Operating and environmental conditions					
Version		Condensate drain			
		Manual rotary M	Semi-automatic H	Fully automatic V	Fully automatic, electrically actuated E1 … E4
Supply pressure	[bar]	0 … 20	1.5 … 12	2 … 12	0.8 … 16
Operating medium for micro filter LFM-A		Filtered compressed air, unlubricated, grade of filtration 1 µm			
Operating medium for fine filter LFM-B		Filtered compressed air, unlubricated, grade of filtration 5 µm			
Ambient temperature	[°C]	–10 … +60	+5 … +60	+5 … +60	+1 … +60
Temperature of medium	[°C]	–10 … +60	+5 … +60	+5 … +60	+1 … +60
Storage temperature	[°C]	–10 … +60	+5 … +60	–10 … +60	+1 … +60
Corrosion resistance	CRC[1]	2			

1) Corrosion resistance class 2 as per Festo standard 940 070
Components subject to moderate corrosion stress. Externally visible parts with primarily decorative surface requirements which are in direct contact with a normal industrial environment or media such as coolants or lubricating agents.

Weights [g]		
Version	Standard	High flow rate HF
Fine and micro filter	2,000	2,500
Fine and micro filter with condensate drain fully automatic, electrically actuated E1 … E4	2,900	2,900

Materials

Sectional view

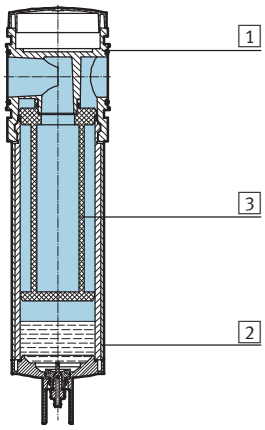

Fine and micro filters		
1	Housing	Die-cast aluminium
2	Bowl	Wrought aluminium alloy
	Inspection window	Polyamide
3	Filter	Borosilicate fibre
–	Seals	Nitrile rubber
	Note on materials	Free of copper and PTFE

Fine and micro filters MS9-LFM, MS series

Technical data

FESTO

Standard flow rate qn as a function of the differential pressure p1-2

Grade of filtration 0.01 µm
MS9-LFM-AGD, Pneumatic connection G½

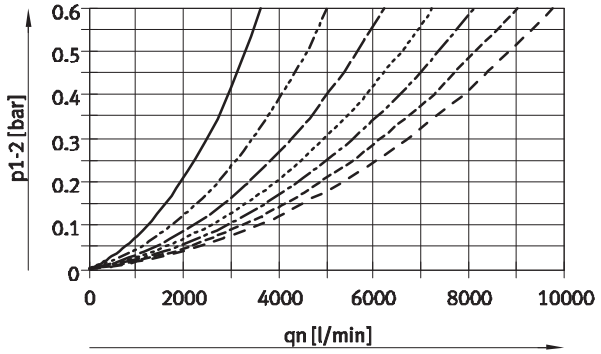

Grade of filtration 0.01 µm
MS9-LFM-¾/AGE, Pneumatic connection G¾

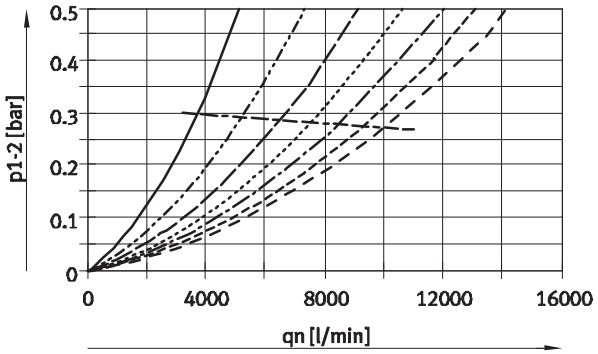

Grade of filtration 0.01 µm
MS9-LFM-1/AGF, Pneumatic connection G1

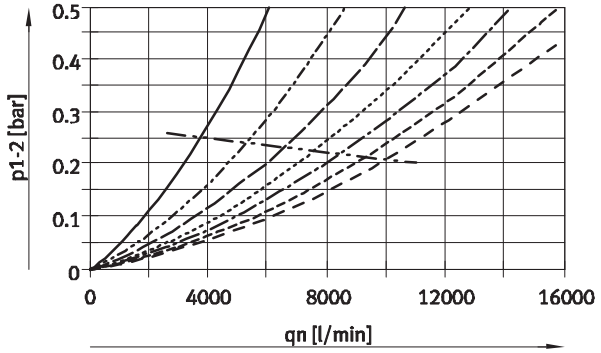

Grade of filtration 0.01 µm
MS9-LFM-AGG, Pneumatic connection G1¼

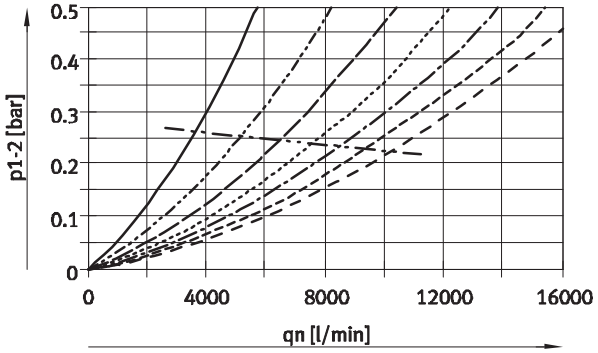

Grade of filtration 0.01 µm
MS9-LFM-AGH, Pneumatic connection G1½

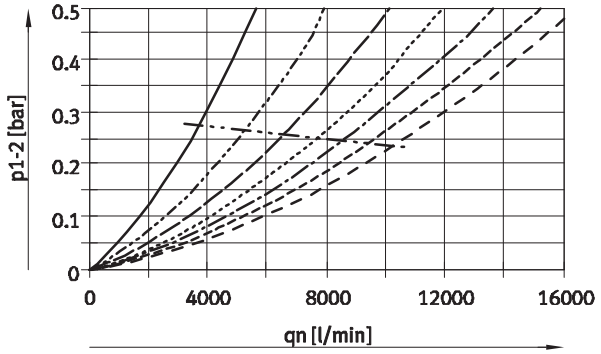

- 2 bar
- 4 bar ($q_{n\ min}$: 268 l/min)
- 6 bar ($q_{n\ min}$: 325 l/min)
- 8 bar
- 10 bar ($q_{n\ min}$: 420 l/min)
- 12 bar
- 14 bar ($q_{n\ min}$: 498 l/min)
- $q_{n\ max}$
  (with MS9-LFM-AGD: $q_{n\ max}$-values lie above the measured q_n-values)

Fine and micro filters MS9-LFM, MS series

Technical data

FESTO

Standard flow rate qn as a function of the differential pressure p1-2

Grade of filtration 1 µm
MS9-LFM-AGD, Pneumatic connection G½

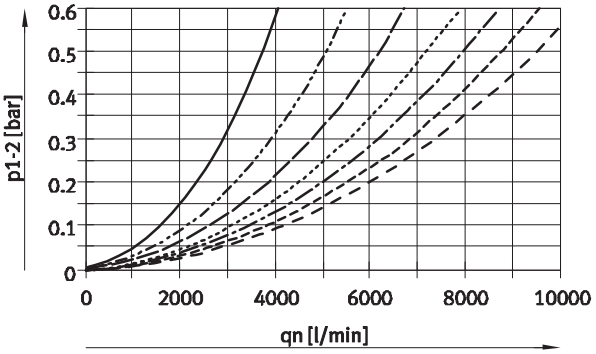

Grade of filtration 1 µm
MS9-LFM-¾/AGE, Pneumatic connection G¾

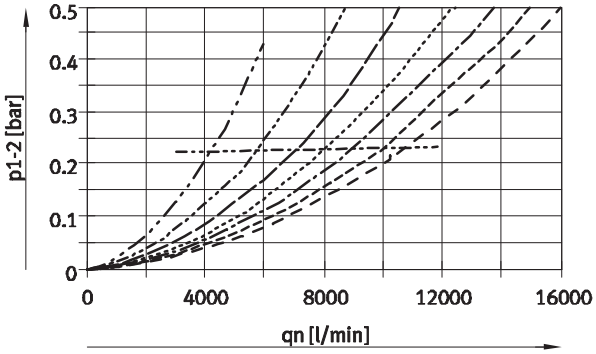

Grade of filtration 1 µm
MS9-LFM-1/AGF, Pneumatic connection G1

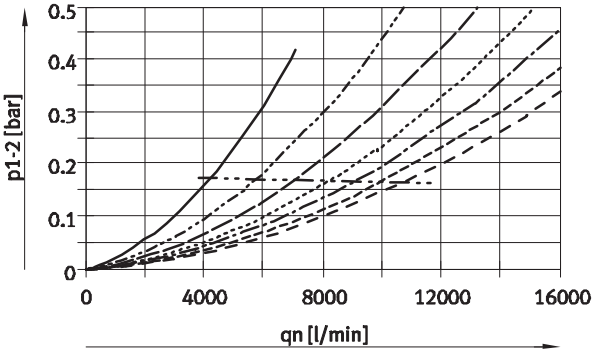

Grade of filtration 1 µm
MS9-LFM-AGG, Pneumatic connection G1¼

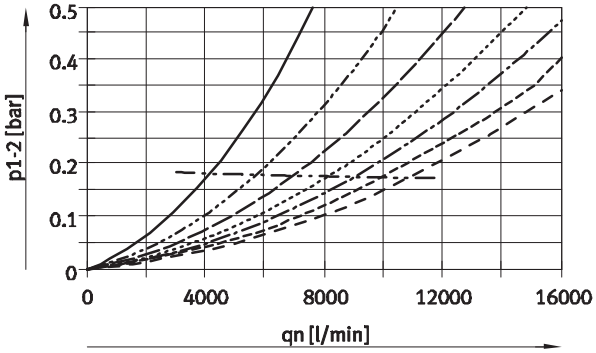

Grade of filtration 1 µm
MS9-LFM-AGH, Pneumatic connection G1½

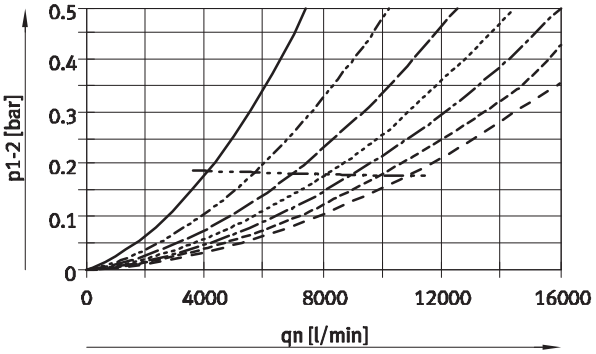

- 2 bar
- 4 bar ($q_{n\ min}$: 289 l/min)
- 6 bar ($q_{n\ min}$: 350 l/min)
- 8 bar
- 10 bar ($q_{n\ min}$: 450 l/min)
- 12 bar
- 14 bar ($q_{n\ min}$: 540 l/min)
- $q_{n\ max}$
  (with MS9-LFM-AGD: $q_{n\ max}$-values lie above the measured q_n-values)

Fine and micro filters MS9-LFM, MS series

Technical data

FESTO

Standard flow rate qn as a function of the differential pressure p1-2

Grade of filtration 0.01 µm
MS9-LFM-¾-...-HF, Pneumatic connection G¾

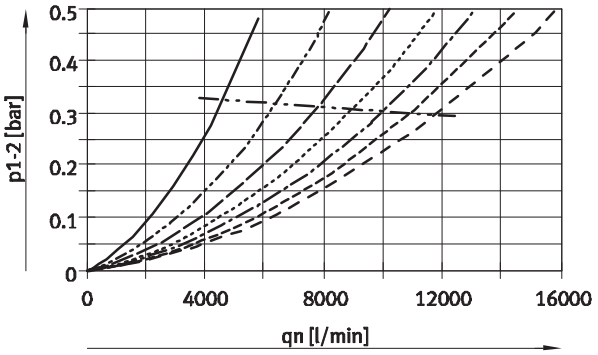

Grade of filtration 0.01 µm
MS9-LFM-1-...-HF, Pneumatic connection G1

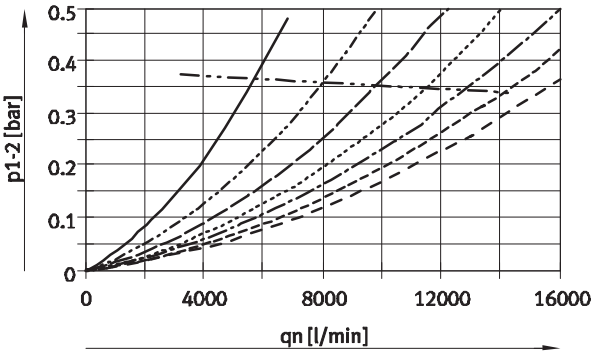

- 2 bar
- 4 bar
- 6 bar ($q_{n\ min}$: 390 l/min)
- 8 bar
- 10 bar
- 12 bar
- 14 bar
- $q_{n\ max}$

Grade of filtration 1 µm
MS9-LFM-¾-...-HF, Pneumatic connection G¾

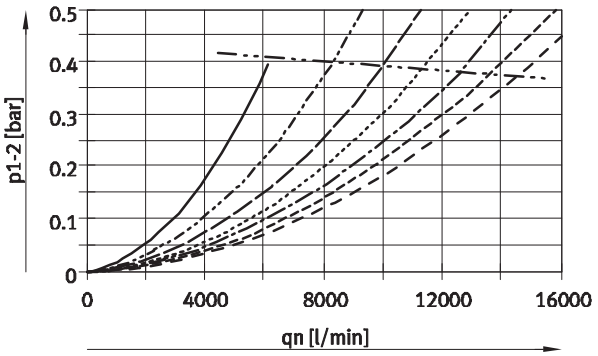

Grade of filtration 1 µm
MS9-LFM-1-...-HF, Pneumatic connection G1

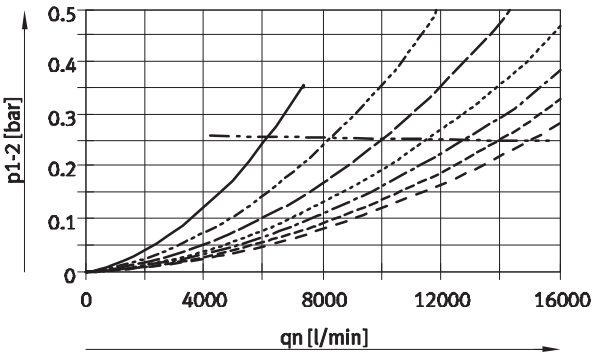

- 2 bar
- 4 bar
- 6 bar ($q_{n\ min}$: 500 l/min)
- 8 bar
- 10 bar
- 12 bar
- 14 bar
- $q_{n\ max}$

Fine and micro filters MS9-LFM, MS series

Technical data

Dimensions – Basic version Download CAD data ➔ **www.festo.com**

without connecting thread G

without connecting thread G, with differential pressure indicator DA

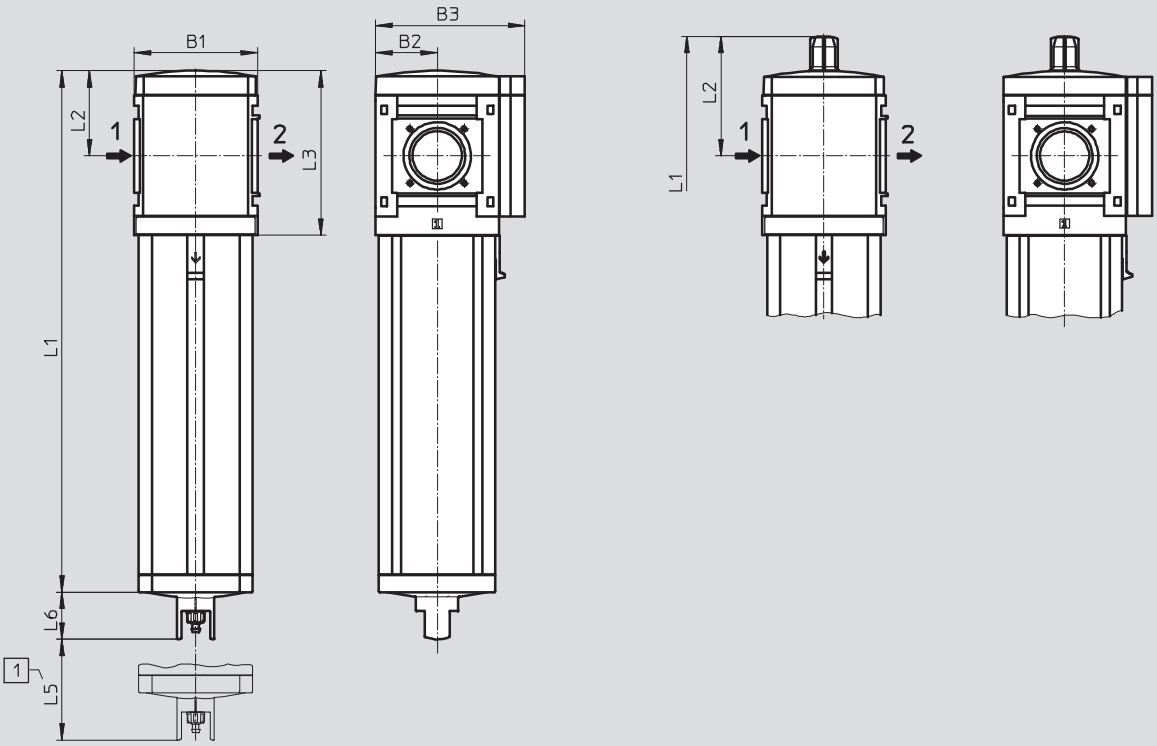

1 Installation dimensions

➔ Flow direction

Type	B1	B2	B3	L1		L2	L3	L5	L6
				Standard	High flow rate HF				
MS9-LFM-G	90	45	109	380.5	480.5	62	120	50	34.5
MS9-LFM-G-...-DA				405.5	505.5	87			

Fine and micro filters MS9-LFM, MS series

Technical data

FESTO

Dimensions – Connecting thread/connecting plate Download CAD data ➔ **www.festo.com**

with connecting thread ¾ or 1

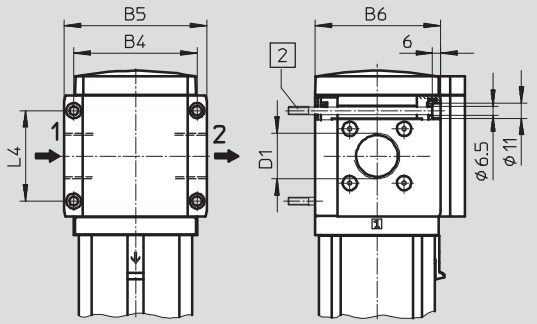

with connecting plate AG...

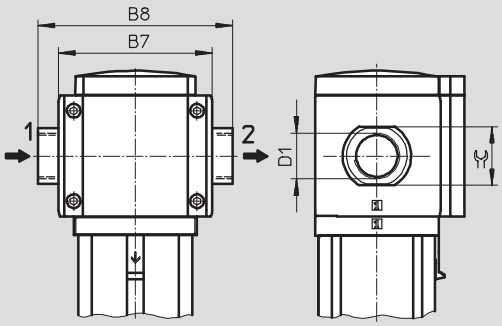

2 Mounting screw M6xmin.90 to DIN 912 (not included in scope of delivery) for wall mounting without mounting bracket

➔ Flow direction

Type	B4	B5	B6	B7	B8	D1	L4	⌀
MS9-LFM-¾	90	104	91.5	–	–	G¾	66	–
MS9-LFM-1						G1		
MS9-LFM-AGD	–	–	–	112	132	G½	–	30
MS9-LFM-AGE					132	G¾		36
MS9-LFM-AGF					142	G1		41
MS9-LFM-AGG					162	G1¼		50
MS9-LFM-AGH					176	G1½		55

Note: This product conforms to ISO 1179-1 and to ISO 228-1

Dimensions – Condensate drain Download CAD data ➔ **www.festo.com**

Manual rotary M/fully automatic V

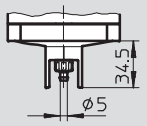

Barbed fitting for plastic tubing PCN-4

Semi-automatic H

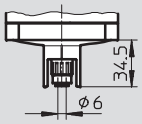

QS fitting for plastic tubing PUN-6/PAN-6

Fully automatic, electrically actuated E1 ... E4 Technical data ➔ Internet: pwea

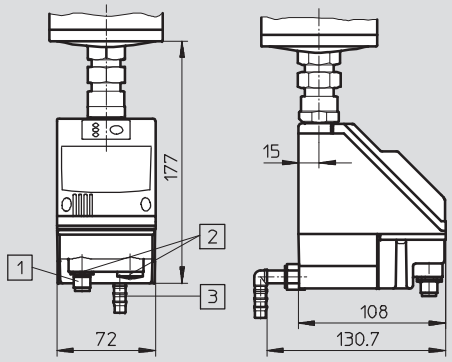

1 Variant E1
PWEA-AP-... with M12x1 plug, 5-pin for NEBU-M12...-LE5

2 Variants E2/E3/E4
PWEA-AC-... with cable conduit fitting Pg9

3 Connection 360° rotatable for plastic tubing PUN-H-12x2-...

Fine and micro filters MS9-LFM, MS series

Technical data

FESTO

Ordering data						
Without differential pressure indicator						
Size	Condensate drain	Connection	Micro filter Grade of filtration 0.01 µm		Fine filter Grade of filtration 1 µm	
			Part No.	Type	Part No.	Type
Standard						
MS9	Manual rotary	G¾	553070	MS9-LFM-¾-AUM	553074	MS9-LFM-¾-BUM
		G1	553000	MS9-LFM-1-AUM	553004	MS9-LFM-1-BUM
		–	564047	MS9-LFM-G-AUM	564039	MS9-LFM-G-BUM
	Fully automatic	G¾	553072	MS9-LFM-¾-AUV	553076	MS9-LFM-¾-BUV
		G1	553002	MS9-LFM-1-AUV	553006	MS9-LFM-1-BUV
		–	564049	MS9-LFM-G-AUV	564041	MS9-LFM-G-BUV
High flow rate						
MS9	Manual rotary	G¾	552964	MS9-LFM-¾-AUM-HF	552968	MS9-LFM-¾-BUM-HF
		G1	553038	MS9-LFM-1-AUM-HF	553042	MS9-LFM-1-BUM-HF
		–	564051	MS9-LFM-G-AUM-HF	564043	MS9-LFM-G-BUM-HF
	Fully automatic	G¾	552966	MS9-LFM-¾-AUV-HF	552970	MS9-LFM-¾-BUV-HF
		G1	553040	MS9-LFM-1-AUV-HF	553044	MS9-LFM-1-BUV-HF
		–	564053	MS9-LFM-G-AUV-HF	564045	MS9-LFM-G-BUV-HF

Ordering data						
With differential pressure indicator						
Size	Condensate drain	Connection	Micro filter Grade of filtration 0.01 µm		Fine filter Grade of filtration 1 µm	
			Part No.	Type	Part No.	Type
Standard						
MS9	Manual rotary	G¾	553078	MS9-LFM-¾-AUM-DA	553082	MS9-LFM-¾-BUM-DA
		G1	553008	MS9-LFM-1-AUM-DA	553012	MS9-LFM-1-BUM-DA
		–	564048	MS9-LFM-G-AUM-DA	564040	MS9-LFM-G-BUM-DA
	Fully automatic	G¾	553080	MS9-LFM-¾-AUV-DA	553084	MS9-LFM-¾-BUV-DA
		G1	553010	MS9-LFM-1-AUV-DA	553014	MS9-LFM-1-BUV-DA
		–	564050	MS9-LFM-G-AUV-DA	564042	MS9-LFM-G-BUV-DA
High flow rate						
MS9	Manual rotary	G¾	552972	MS9-LFM-¾-AUM-HF-DA	552976	MS9-LFM-¾-BUM-HF-DA
		G1	553046	MS9-LFM-1-AUM-HF-DA	553050	MS9-LFM-1-BUM-HF-DA
		–	564052	MS9-LFM-G-AUM-HF-DA	564044	MS9-LFM-G-BUM-HF-DA
	Fully automatic	G¾	552974	MS9-LFM-¾-AUV-HF-DA	552978	MS9-LFM-¾-BUV-HF-DA
		G1	553048	MS9-LFM-1-AUV-HF-DA	553052	MS9-LFM-1-BUV-HF-DA
		–	564054	MS9-LFM-G-AUV-HF-DA	564046	MS9-LFM-G-BUV-HF-DA

Fine and micro filters MS9-LFM, MS series

Ordering data – Modular products

FESTO

M Mandatory data												
Module No.	Series	Size		Function		Connection size		Grade of filtration		Bowl
552940	MS	9		LFM		¾, 1 AGD, AGE, AGF, AGG, AGH G		B A		U
Order example										
552940	**MS**	**9**	–	**LFM**	–	**AGD**	–	**B**	–	**U**

Ordering table						
Grid dimension [mm]		90	Conditions	Code		Enter code
M	Module No.	**552940**				
	Series	Standard service unit		**MS**		MS
	Size	9		**9**		9
	Function	Fine and micro filter		**-LFM**		-LFM
	Connection size	Thread G¾		**-¾**		
		Thread G1		**-1**		
		Connecting plate G½		**-AGD**		
		Connecting plate G¾		**-AGE**		
		Connecting plate G1		**-AGF**		
		Connecting plate G1¼		**-AGG**		
		Connecting plate G1½		**-AGH**		
		Module without connecting thread, without connecting plate		**-G**		
	Grade of filtration µm	1		**-B**		
		0.01		**-A**		
↓	Bowl	Metal bowl		**-U**		-U

Transfer order code

552940	**MS**	**9**	–	**LFM**	–		–		–	**U**

Fine and micro filters MS9-LFM, MS series

Ordering data – Modular products

FESTO

➔ M Mandatory data	O Options			
Condensate drain	Flow rate	Filter contamination sensor	Type of mounting	Alternative flow direction
M H V E1 E2 E3 E4	HF	DA	WP WPM WPB	Z
– M	– HF	– DA	– WP	– Z

Ordering table

Grid dimension [mm]		90	Condi-tions	Code		Enter code
➔ M	Condensate drain	Manual		-M		
		Semi-automatic (P1 max. 12 bar)		-H		
		Fully automatic (P1 max. 12 bar)		-V		
		External fully automatic condensate drain, electrical, 24 V DC, M12		-E1		
		External fully automatic condensate drain, electrical, 110 V AC, terminal strip		-E2		
		External fully automatic condensate drain, electrical, 230 V AC, terminal strip		-E3		
		External fully automatic condensate drain, electrical, 24 V DC, terminal strip		-E4		
O	Flow rate	High flow rate		-HF		
	Filter contamination sensor	Differential pressure indicator, visual		-DA		
	Type of mounting	Mounting bracket	1	-WP		
		Mounting bracket	1	-WPM		
		Wall mounting bracket for large wall gap	1	-WPB		
	Alternative flow direction	Flow direction from right to left		-Z		

1 **WP, WPM, WPB** Not with module G

Transfer order code

–		–		–		–		–	

Activated carbon filters MS9-LFX, MS series

Peripherals overview

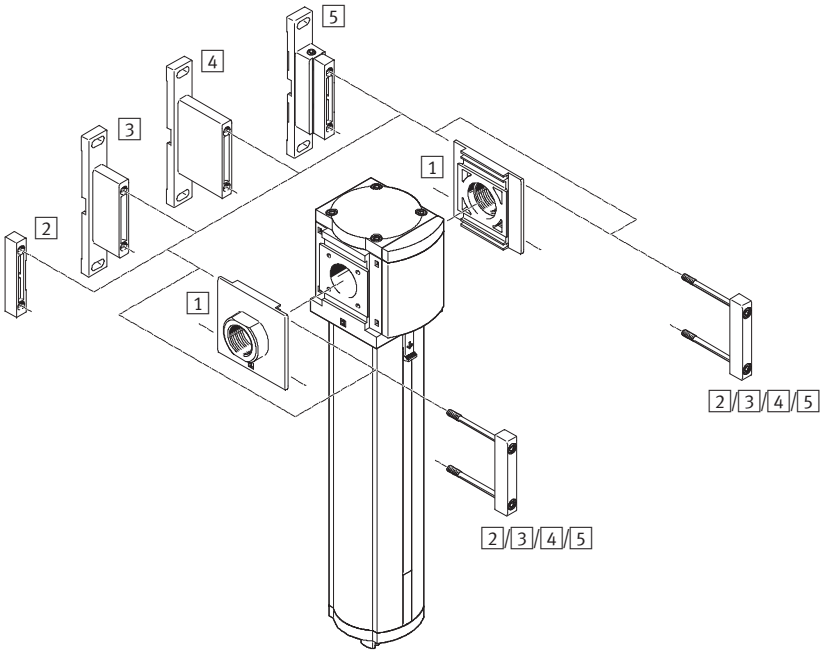

Note

Other accessories:

– Module connector for combination with size MS6 or size MS12
➔ Internet: armv

Mounting attachments and accessories				
	Individual device		Combination	➔ Page/Internet
	without connecting thread	with connecting thread ¾ or 1		
1 Connecting plate MS9-AG...	■	–	■	ms9-ag
2 Module connector MS9-MV	■	–	■	ms9-mv
3 Mounting bracket MS9-WP	■	■	■	ms9-wp
4 Mounting bracket MS9-WPB	■	■	■	ms9-wp
5 Mounting bracket MS9-WPM	■	–	■	ms9-wp

Activated carbon filters MS9-LFX, MS series

Type codes

MS	9	–	LFX	–	¾	–	U

Series	
MS	Standard service unit

Size	
9	Grid dimension 90 mm

Service function	
LFX	Activated carbon filter

Pneumatic connection	
¾	Thread G¾
1	Thread G1
G	Module without connecting thread, without connecting plate

Bowl guard	
U	Metal bowl guard

Further variants can be ordered using the modular system ➔ 62

- Connecting plates
- Type of mounting
- Alternative flow direction

New

Activated carbon filters MS9-LFX, MS series

Technical data

Function

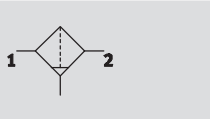

Flow rate
max. 6,500 l/min

Temperature range
–10 ... +60 °C

Supply pressure
0 ... 20 bar

- Removal of liquid and gaseous oil particles from compressed air using activated carbon
- Eliminates odours and vapours
- Prefiltration with micro filter MS9-LFM-A, grade of filtration 0.01 µm, recommended
- New filter cartridges ➔ 86

General technical data				
Size	MS9			
Pneumatic connection 1, 2	G¾	G1	G½ ... G1½ (with connecting plate AG...)	– (without connecting thread G)
Constructional design	Activated carbon filter			
Type of mounting	Via accessories			
	In-line installation			
Installation position	Vertical ±5°			
Air purity class at the output[1]	1.7.1 to DIN ISO 8573-1			
Bowl guard	Metal bowl guard			
Residual oil content [mg/m³]	≤0.003			

1) It is recommended to replace filter cartridges after 1,000 operating hours (applies to an ambient temperature of 21 °C). The service life of a filter cartridge is reduced at higher temperatures.
Note: This product conforms to ISO 1179-1 and to ISO 228-1

Standard flow rate qn[1] [l/min]	
qn max.	6,500

1) Measured at p1 = 6 bar

Operating and environmental conditions		
Supply pressure	[bar]	0 ... 20
Operating medium		Filtered compressed air, unlubricated, grade of filtration 0.01 µm
Ambient temperature	[°C]	–10 ... +60
Temperature of medium	[°C]	+5 ... +30
Storage temperature	[°C]	–10 ... +60
Corrosion resistance	CRC[1]	2

1) Corrosion resistance class 2 as per Festo standard 940 070
Components subject to moderate corrosion stress. Externally visible parts with primarily decorative surface requirements which are in direct contact with a normal industrial environment or media such as coolants or lubricating agents.

Weights [g]	
Activated carbon filter	2,000

Activated carbon filters MS9-LFX, MS series

Technical data

FESTO

Materials

Sectional view

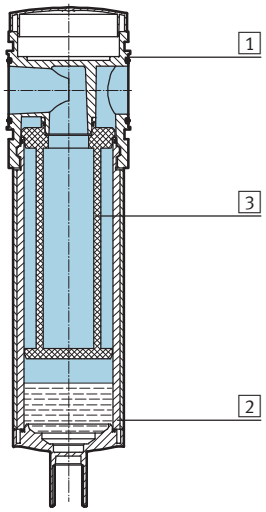

Activated carbon filter		
1	Housing	Die-cast aluminium
2	Bowl	Wrought aluminium alloy
	Inspection window	Polyamide
3	Filter	Activated carbon
–	Seals	Nitrile rubber
	Note on materials	Free of copper and PTFE

Standard flow rate qn as a function of the differential pressure p1-2

MS9-LFX-AGD, Pneumatic connection G½

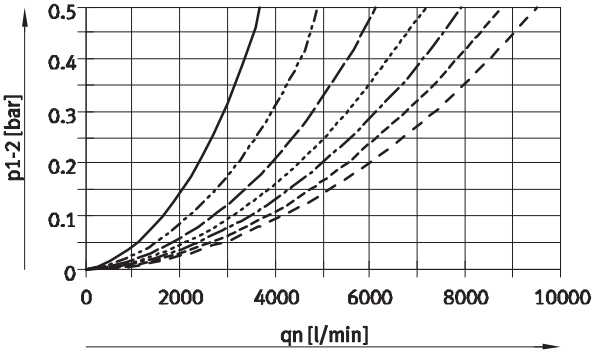

MS9-LFX-¾/AGE, Pneumatic connection G¾

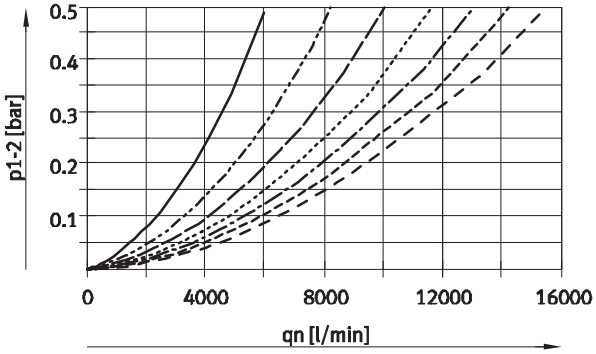

MS9-LFX-1/AGF, Pneumatic connection G1

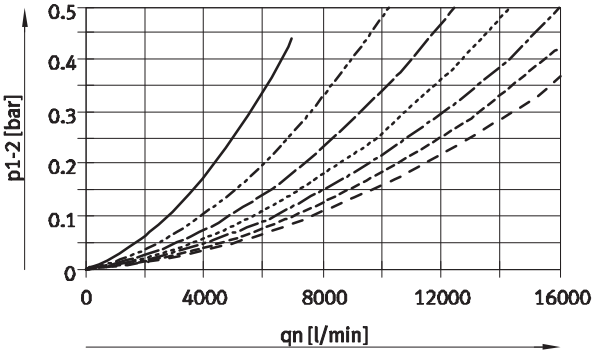

MS9-LFX-AGH, Pneumatic connection G1½

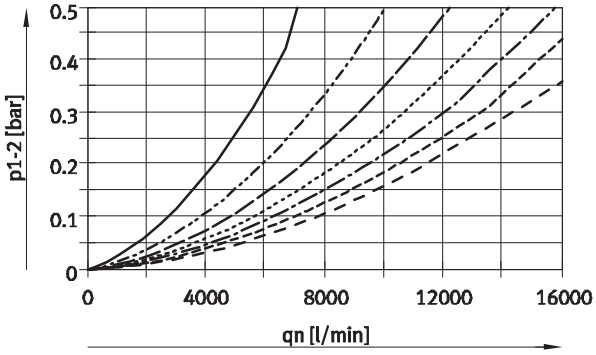

- 2 bar
- 4 bar
- 6 bar
- 8 bar
- 10 bar
- 12 bar
- 14 bar

Activated carbon filters MS9-LFX, MS series

Technical data

FESTO

Dimensions – Basic version Download CAD data ➔ **www.festo.com**

without connecting thread G

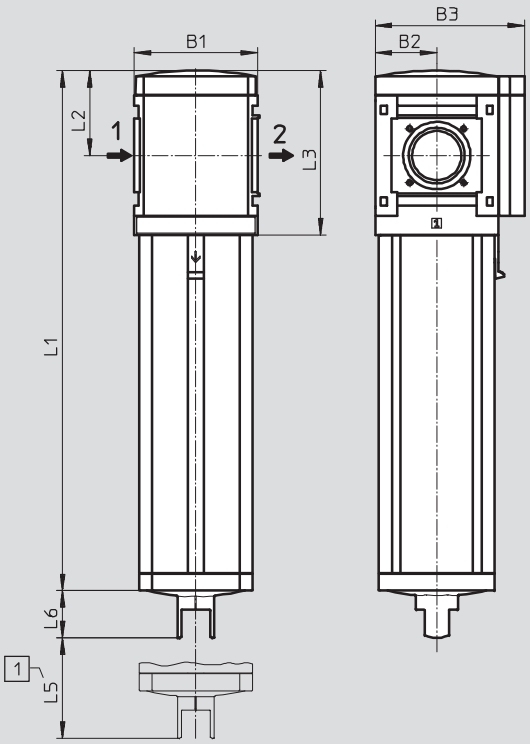

1 Installation dimensions

➔ Flow direction

Type	B1	B2	B3	L1	L2	L3	L5	L6
MS9-LFX-G	90	45	109	380.5	62	120	50	34.5

Activated carbon filters MS9-LFX, MS series

Technical data

FESTO

Dimensions – Connecting thread/connecting plate Download CAD data ➔ **www.festo.com**

with connecting thread ¾ or 1

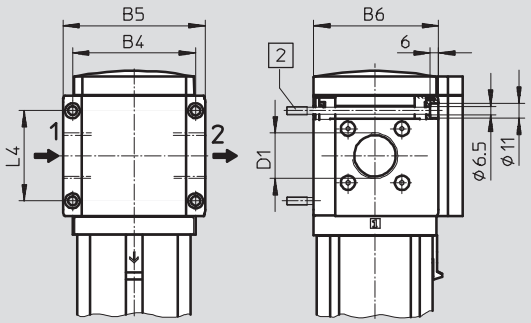

with connecting plate AG...

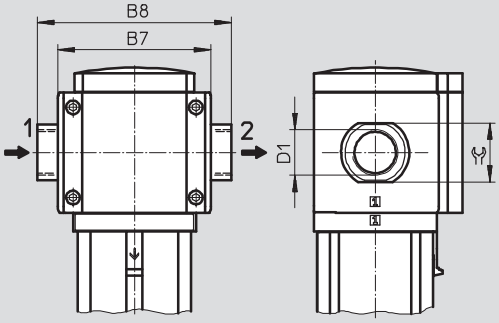

2 Mounting screw M6xmin.90 to DIN 912 (not included in scope of delivery) for wall mounting without mounting bracket

➔ Flow direction

Type	B4	B5	B6	B7	B8	D1	L4	⌀
MS9-LFX-¾	90	104	91.5	–	–	G¾	66	–
MS9-LFX-1						G1		
MS9-LFX-AGD	–	–	–	112	132	G½	–	30
MS9-LFX-AGE					132	G¾		36
MS9-LFX-AGF					142	G1		41
MS9-LFX-AGG					162	G1¼		50
MS9-LFX-AGH					176	G1½		55

Note: This product conforms to ISO 1179-1 and to ISO 228-1

Ordering data

Size	Connection	Part No.	Type
MS9	G¾	**552996**	**MS9-LFX-¾-U**
	G1	**553032**	**MS9-LFX-1-U**
	–	**564038**	**MS9-LFX-G-U**

Activated carbon filters MS9-LFX, MS series

Ordering data – Modular products

FESTO

M Mandatory data														O Options		
Module No.	Series	Size		Function		Connection size		Bowl		Type of mounting		Alternative flow direction
552942	MS	9		LFX		¾, 1 AGD, AGE, AGF, AGG, AGH G		U		WP WPM WPB		Z
Order example												
552942	MS	9	–	LFX	–	AGD	–	U	–	WP	–	Z

Ordering table

	Grid dimension [mm]	90	Condi-tions	Code		Enter code
M	Module No.	552942				
	Series	Standard service unit		MS		MS
	Size	9		9		9
	Function	Activated carbon filter		-LFX		-LFX
	Connection size	Thread G¾		-¾		
		Thread G1		-1		
		Connecting plate G½		-AGD		
		Connecting plate G¾		-AGE		
		Connecting plate G1		-AGF		
		Connecting plate G1¼		-AGG		
		Connecting plate G1½		-AGH		
		Module without connecting thread, without connecting plate		-G		
	Bowl	Metal bowl		-U		-U
O	Type of mounting	Mounting bracket	1	-WP		
		Mounting bracket	1	-WPM		
		Wall mounting bracket for large wall gap	1	-WPB		
	Alternative flow direction	Flow direction from right to left		-Z		-Z

1 **WP, WPM, WPB** Not with module G

Transfer order code

552942	MS	9	–	LFX	–		–	U	–		–			

Filters MS12-LF, MS series

Peripherals overview

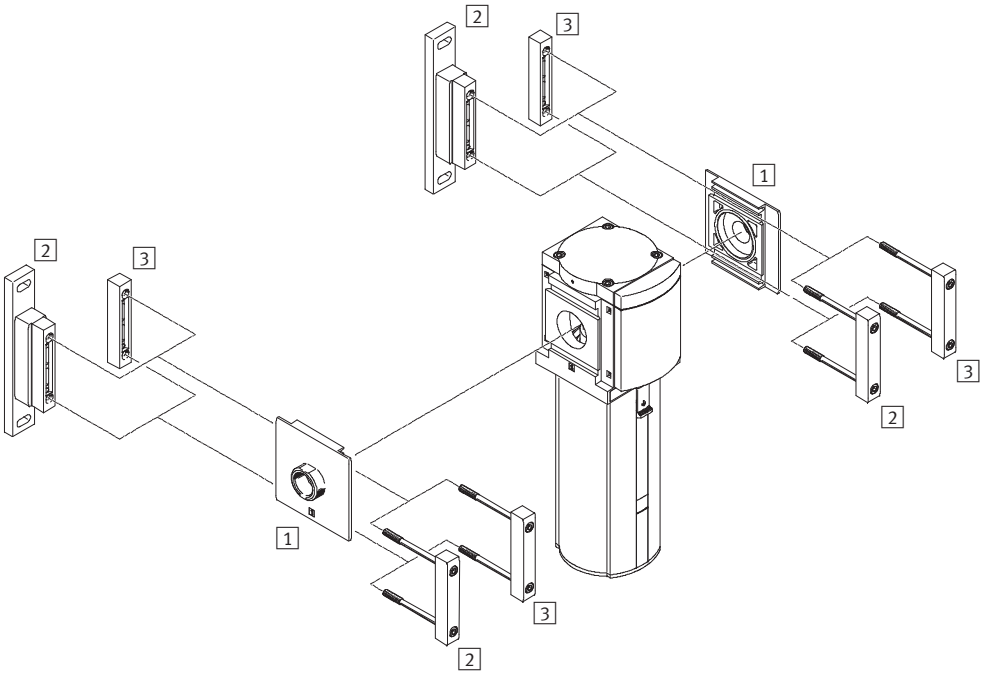

- Note

Additional accessories:

– Module connector for combination with size MS9 ➔ Internet: armv

Mounting attachments and accessories		
		➔ Page/Internet
1	Connecting plate MS12-AG...	ms12-ag
2	Mounting bracket MS12-WP	ms12-wp
3	Module connector MS12-MV	ms12-mv

Filters MS12-LF, MS series

Type codes

MS	12	–	LF	–	G	–	C	U	V

Series	
MS	Standard service unit

Size	
12	Grid dimension 124 mm

Service function	
LF	Filter

Connection size	
G	Module without connecting thread, without connecting plate Connecting plates ➔ Accessories

Grade of filtration	
C	5 µm
E	40 µm

Bowl guard	
U	Metal bowl

Condensate drain	
V	Fully automatic

Further variants can be ordered using the modular system ➔ 69

- Connecting plates
- Condensate drain
- Type of mounting
- Alternative flow direction

Filters MS12-LF, MS series

Technical data

Function
Condensate drain
manual rotary

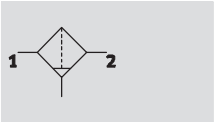

fully automatic

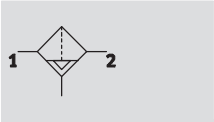

Flow rate
11,500 ... 16,000 l/min

Temperature range
–10 ... +60 °C

Input pressure
0.8 ... 20 bar

The sintered filter with centrifugal separation removes contamination, rust and condensate from the compressed air. The filter cartridges are replaceable.

- Good particle and condensate separation
- High flow rate with minimal pressure drop
- Available with manual, fully automatic or fully automatic, electrically actuated condensate drain
- Choice of filter cartridges: 5 µm or 40 µm
- New filter cartridges ➔ 87

General technical data					
Pneumatic connection 1, 2[1]		G1	G1¼	G1½	G2
Design		Sintered filter with centrifugal separation			
Type of mounting		Via accessories			
		In-line installation			
Assembly position		Vertical ±5°			
Grade of filtration	[µm]	5 (air purity class at the output 3.7.– to DIN ISO 8573-1)			
		40 (air purity class at the output 5.7.– to DIN ISO 8573-1)			
Bowl guard		Metal bowl			
Condensate drain		Manual rotary			
		Fully automatic			
		Fully automatic, electrical actuated			
Max. condensate volume	[cm^3]	400			

1) Dependent on connecting plate selected, must be ordered separately as an accessory ➔ Internet: ms12-ag
Note: This product conforms to ISO 1179-1 and to ISO 228-1

Standard nominal flow rate qnN[1] [l/min]					
Pneumatic connection		G1	G1¼	G1½	G2
Grade of filtration	5 µm	11,500	12,500	13,500	14,000
	40 µm	12,500	13,000	14,000	16,000

1) Dependent on connecting plate selected, must be ordered separately as an accessory ➔ Internet: ms12-ag
Measured at p1 = 6 bar and Δp = 0.5 bar

Operating and environmental conditions				
Condensate drain		Manual rotary M	Fully automatic V	Fully automatic, electrical actuated E1 … E4
Input pressure	[bar]	0.8 … 20	2 … 12	0.8 … 16
Operating medium		Compressed air, air quality class 5.7.– to DIN ISO 8573-1		
Ambient temperature	[°C]	–10 … +60	+5 … +60	+1 … +60
Temperature of medium	[°C]	–10 … +60	+5 … +60	+1 … +60
Storage temperature	[°C]	–10 … +60	–10 … +60	+1 … +60
Corrosion resistance	CRC[1)]	2		

1) Corrosion resistance class 2 according to Festo standard 940 070
Components requiring moderate corrosion resistance. Externally visible parts with primarily decorative surface requirements which are in direct contact with a normal industrial environment or media such as coolants or lubricating agents.

Weights [g]	
Filter with metal bowl U	6,500
Filter with metal bowl U and fully automatic, electrically actuated condensate drain E1 … E4	7,200

Materials

Sectional view

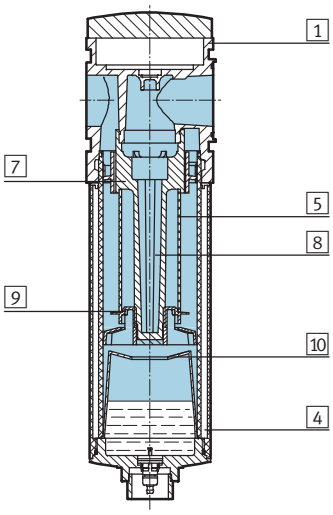

Filter		
1	Body	Die-cast aluminium
4	Metal bowl	Wrought aluminium alloy
5	Filter element	Sintered bronze
7	Spin disc	Polyacetate
8	Filter holder	Polyacetate
9	Separating plate	Polyacetate
10	Stabilising disc	Polyacetate
–	Seals	Nitrile rubber

Standard flow rate qn as a function of the differential pressure Δp1-2

Grade of filtration 5 µm

With connecting plate MS12-AGF
Pneumatic connection G1

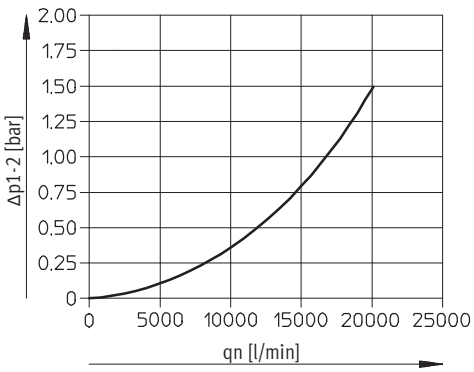

With connecting plate MS12-AGI
Pneumatic connection G2

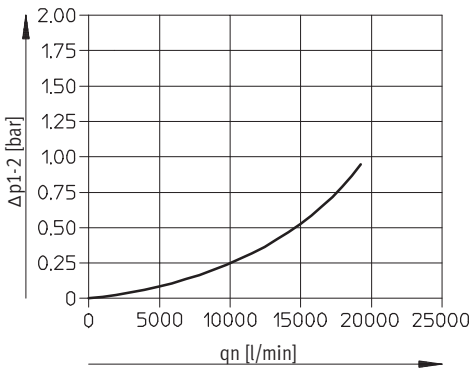

Standard flow rate qn as a function of the differential pressure Δp1-2

Grade of filtration 40 µm

With connecting plate MS12-AGF
Pneumatic connection G1

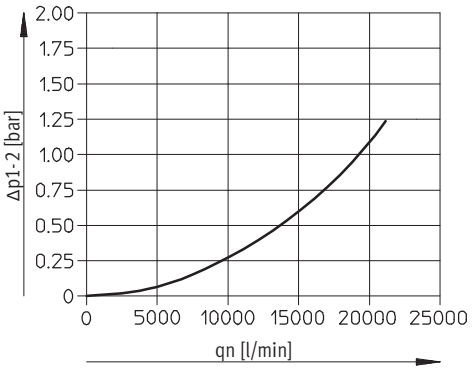

With connecting plate MS12-AGI
Pneumatic connection G2

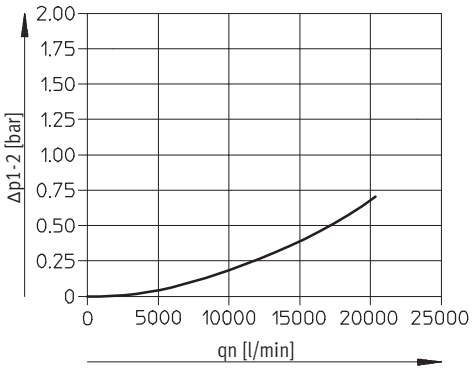

Dimensions – Standard

Download CAD data ➔ **www.festo.com**

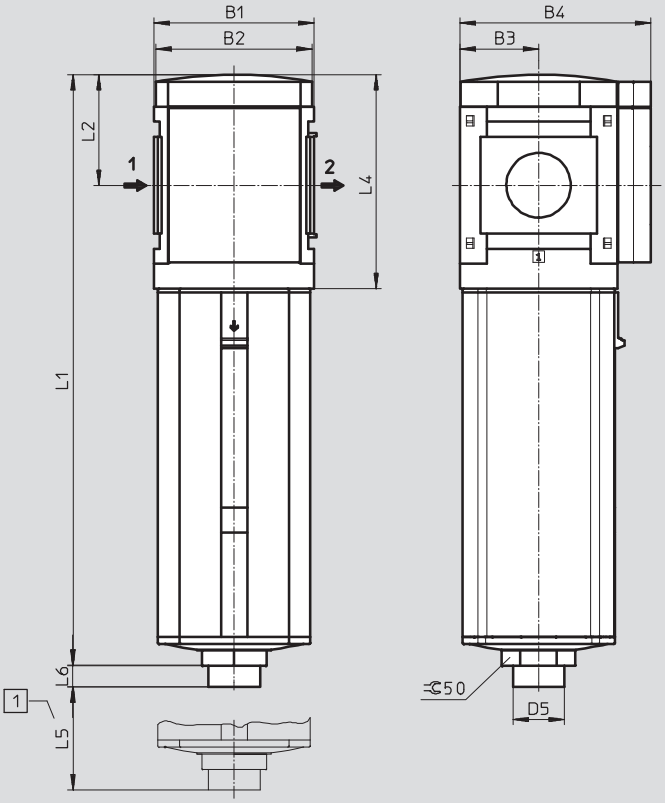

1 Installation dimensions

➔ Flow direction

Type	B1	B2	B3	B4	D5 ∅	L1	L2	L4	L5	L6
MS12-LF	124	122	61	148	40	458	86	166	250	16

Dimensions – Condensate drain

Download CAD data ➔ **www.festo.com**

Manual rotary M

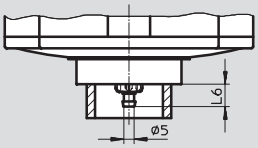

Barbed fitting for plastic tubing PCN-4

Type	L6
MS12-LF-...-M	11

Fully automatic V

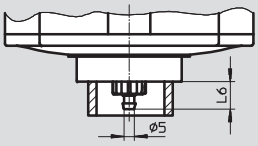

Barbed fitting for plastic tubing PCN-4

Type	L6
MS12-LF-...-V	13

Fully automatic, electrically actuated E1 ... E4

Technical data ➔ Internet: pwea

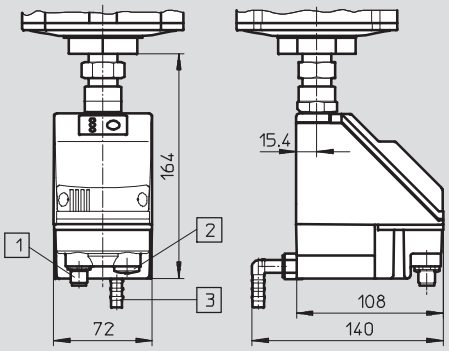

1 Variant E1
PWEA-AP-... with M12x1 plug, 5-pin for NEBU-M12...-LE5

2 Variant E2/E3/E4
PWEA-AC-... with cable conduit fitting Pg9

3 Connection 360° rotatable for plastic tubing PUN-H-12x2-...

Ordering data

Metal bowl

Size	Condensate drain	Connection	Grade of filtration 5 µm		Grade of filtration 40 µm	
			Part No.	Type	Part No.	Type
MS12	fully automatic	G1 ... G2[1]	**537152**	**MS12-LF-G-CUV**	**537151**	**MS12-LF-G-EUV**

1) Connecting plate must be ordered separately as an accessory ➔ Internet: ms12-ag

Note: This product conforms to ISO 1179-1 and to ISO 228-1

M Mandatory data								O Options	
Module No.	**Series**	**Size**	**Function**	**Connection size**	**Grade of filtration**	**Bowl**	**Condensate drain**	**Type of mounting**	**Alternative flow direction**
535023	MS	12	LF	AGF AGG AGH AGI G	E C	U	M V E1 E2 E3 E4	WP	Z
Order example									
535023	**MS**	**12**	– **LF**	– **G**	– **E**	– **U**	– **V**	–	–

Ordering table

	Grid dimension [mm]	124	Conditions	Code		Enter code
M	Module No.	**535023**				
	Series	Standard		**MS**		MS
	Size	12		**12**		12
	Function	Filter		**-LF**		-LF
	Connection size	Connecting plate G1		**-AGF**		
		Connecting plate G1¼		**-AGG**		
		Connecting plate G1½		**-AGH**		
		Connecting plate G2		**-AGI**		
		Module without connecting thread, without connecting plate		**-G**		
	Grade of filtration	40 µm		**-E**		
		5 µm		**-C**		
	Bowl	Metal bowl		**-U**		-U
	Condensate drain	Manual		**-M**		
		Fully automatic (P1 max. 12 bar)		**-V**		
		External fully automatic condensate drain, electrical, 24 V DC, M12		**-E1**		
		External fully automatic condensate drain, electrical, 110 V AC, terminals		**-E2**		
		External fully automatic condensate drain, electrical, 230 V AC, terminals		**-E3**		
		External fully automatic condensate drain, electrical, 24 V DC, terminals		**-E4**		
O	Type of mounting	Mounting bracket	1	**-WP**		
	Alternative flow direction	Flow direction from right to left		**-Z**		

1 **WP** Only with connecting plate AGF, AGG, AGH or AGI.

Transfer order code

535023	**MS**	**12**	– **LF**	–	–	– **U**	–	–	–

Fine and micro filters MS12-LFM, MS series

Peripherals overview

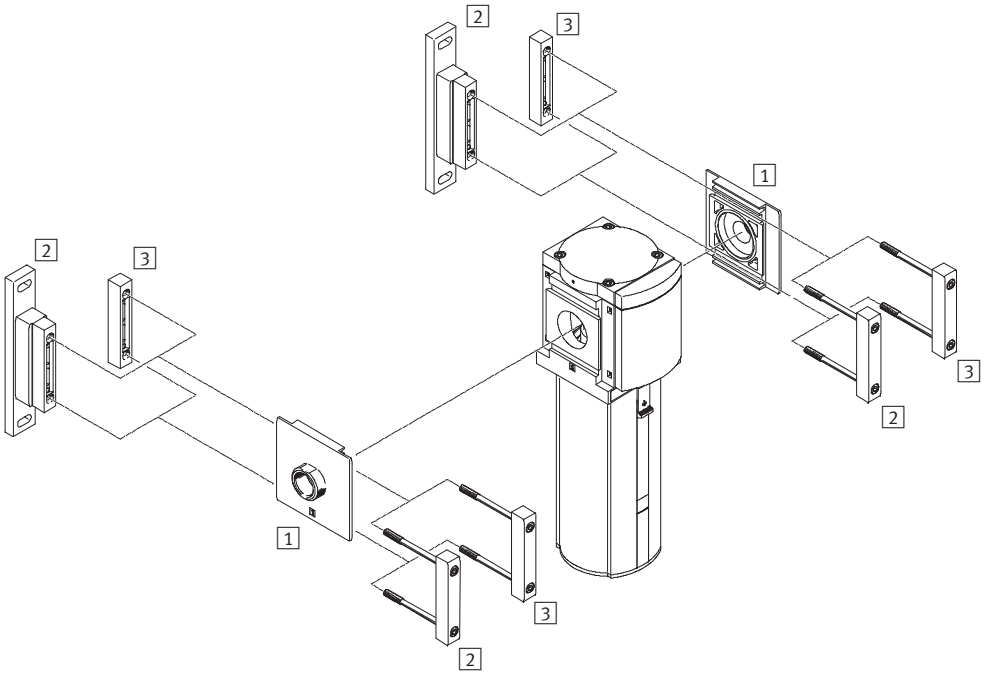

Note

Additional accessories:

– Module connector for combination with size MS9 ➔ Internet: armv

Mounting attachments and accessories		➔ Page/Internet
1	Connecting plate MS12-AG...	ms12-ag
2	Mounting bracket MS12-WP	ms12-wp
3	Module connector MS12-MV	ms12-mv

Fine and micro filters MS12-LFM, MS series

Type codes

MS	12	–	LFM	–	G	–	B	U	V

Series	
MS	Standard service unit

Size	
12	Grid dimension 124 mm

Service function	
LFM	Fine and micro filter

Connection size	
G	Module without connecting thread, without connecting plate Connecting plates ➔ Accessories

Grade of filtration	
A	0.01 µm
B	1 µm

Bowl guard	
U	Metal bowl

Condensate drain	
V	Fully automatic

Further variants can be ordered using the modular system ➔ 78

- Connecting plates
- Condensate drain
- Filter change sensor
- Type of mounting
- Alternative flow direction

Fine and micro filters MS12-LFM, MS series

Technical data

Function
Condensate drain
manual rotary
without differential pressure indicator

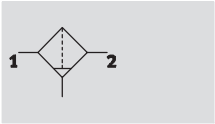

with differential pressure indicator

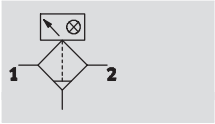

Condensate drain
fully automatic
without differential pressure indicator

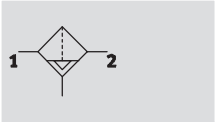

with differential pressure indicator

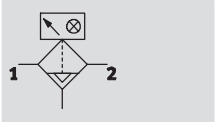

Flow rate
500 ... 50,000 l/min

Temperature range
–10 ... +60 °C

Input pressure
0.8 ... 20 bar

- High-performance filter for exceptionally clean compressed air
- Air quality to DIN ISO 8573-1
- Available with manual, fully automatic or fully automatic, electrically actuated condensate drain
- Available with differential pressure indicator for optical indication of filter contamination
- Choice of filter cartridges: 0.01 µm or 1 µm
- New filter cartridges ➔ 87

MS12-LFM-A:
ISO class 1 for particles:
max. particle density 0.1 mg/m³
ISO class 2 for oil aerosols:
max. oil concentration 0.1 mg/m³
Filter efficiency 99.9999%

MS12-LFM-B:
ISO class 2 for particles:
max. particle density 1 mg/m³
ISO class 3 for oil aerosols:
max. oil concentration 1 mg/m³
Filter efficiency 99.99%

General technical data				
Pneumatic connection 1, 2[1]	G1	G1¼	G1½	G2
Design	Fibre filter			
Type of mounting	Via accessories			
	In-line installation			
Assembly position	Vertical ±5°			
Grade of filtration [µm]	0.01 (micro filter MS12-LFM-A, air purity class at the output 1.7.2 to DIN ISO 8573-1)			
	1 (fine filter MS12-LFM-B, air purity class at the output 2.7.3 to DIN ISO 8573-1)			
Bowl guard	Metal bowl			
Condensate drain	Manual rotary			
	Fully automatic			
	Fully automatic, electrical actuated			
Max. condensate volume [cm³]	400			

1) Dependent on connecting plate selected, must be ordered separately as an accessory ➔ Internet: ms12-ag
Note: This product conforms to ISO 1179-1 and to ISO 228-1

Fine and micro filters MS12-LFM, MS series

Technical data

Standard flow rate q_n [l/min]				
Input pressure p_1	4 bar	6 bar	10 bar	14 bar
Micro filter MS12-LFM-A				
Max. standard flow rate for air purity class $q_{n\ max}$	16,670	23,300	36,670	50,000
Min. standard flow rate for air purity class $q_{n\ min}$	500	700	1,100	1,500
Fine filter MS12-LFM-B				
Max. standard flow rate for air purity class $q_{n\ max}$	16,670	23,300	36,670	50,000
Min. standard flow rate for air purity class $q_{n\ min}$	625	950	1,390	1,675

Operating and environmental conditions				
Condensate drain		Manual rotary M	Fully automatic V	Fully automatic, electrical actuated E1 … E4
Input pressure p_1	[bar]	0.8 … 20	2 … 12	0.8 … 16
Operating medium micro filter MS12-LFM-A		Compressed air, filtered, unlubricated, grade of filtration 1 µm		
Operating medium fine filter MS12-LFM-B		Compressed air, filtered, unlubricated, grade of filtration 5 µm		
Ambient temperature	[°C]	–10 … +60	+5 … +60	+1 … +60
Temperature of medium	[°C]	–10 … +60	+5 … +60	+1 … +60
Storage temperature	[°C]	–10 … +60	–10 … +60	+1 … +60
Corrosion resistance	CRC[1)]	2		

1) Corrosion resistance class 2 according to Festo standard 940 070
Components requiring moderate corrosion resistance. Externally visible parts with primarily decorative surface requirements which are in direct contact with a normal industrial environment or media such as coolants or lubricating agents.

Weights [g]	
Fine and micro filter with metal bowl U	7,000
Fine and micro filter with metal bowl U and fully automatic, electrically actuated condensate drain E1 … E4	7,700

Materials

Sectional view

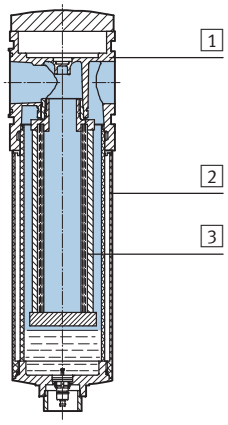

Fine and micro filter		
1	Body	Die-cast aluminium
2	Metal bowl	Wrought aluminium alloy
3	Filter element	Borosilicate mesh
–	Seals	Nitrile rubber

Standard flow rate qn as a function of the differential pressure p1-2

Grade of filtration 0.01 µm
With connecting plate MS12-AGF, Pneumatic connection G1

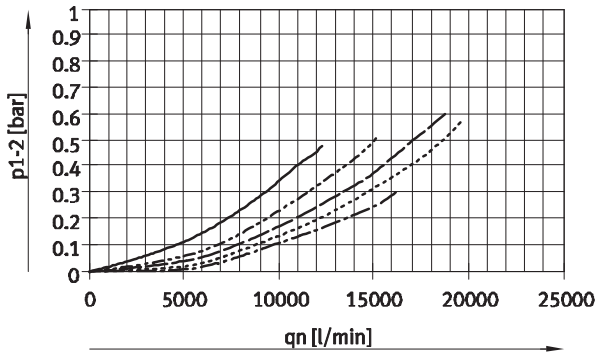

Grade of filtration 0.01 µm
With connecting plate MS12-AGG, Pneumatic connection G1¼

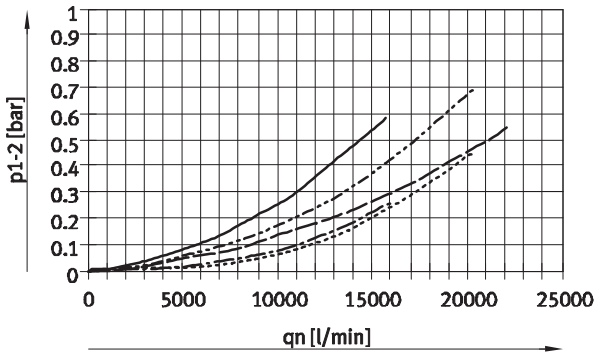

Grade of filtration 0.01 µm
With connecting plate MS12-AGH, Pneumatic connection G1½

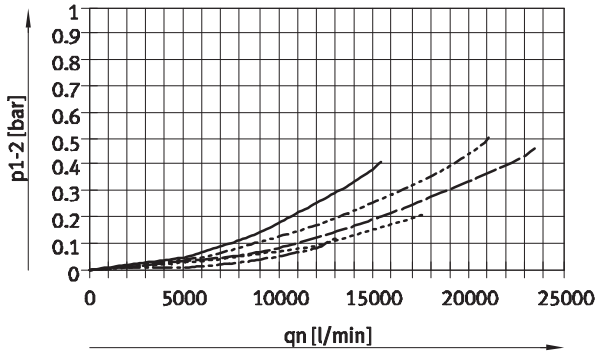

Grade of filtration 0.01 µm
With connecting plate MS12-AGI, Pneumatic connection G2

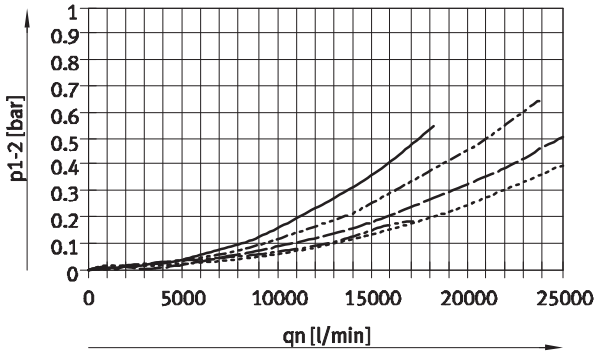

p1: 4 bar
p1: 6 bar
p1: 8 bar
p1: 10 bar
p1: 12 bar

Standard flow rate qn as a function of the differential pressure p1-2

Grade of filtration 1 µm
With connecting plate MS12-AGF, Pneumatic connection G1

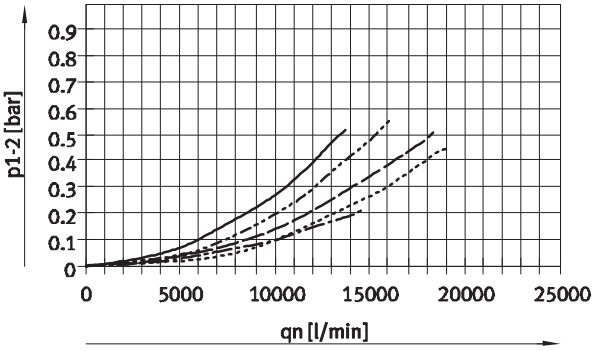

Grade of filtration 1 µm
With connecting plate MS12-AGG, Pneumatic connection G1¼

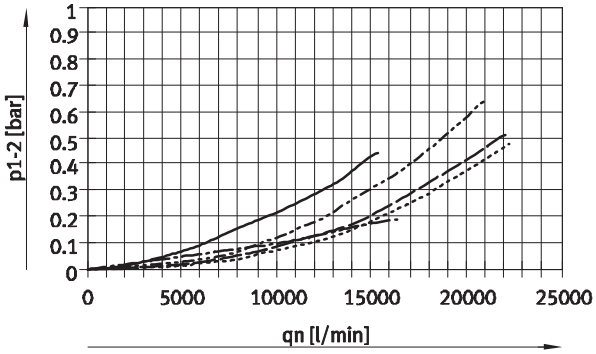

Grade of filtration 1 µm
With connecting plate MS12-AGH, Pneumatic connection G1½

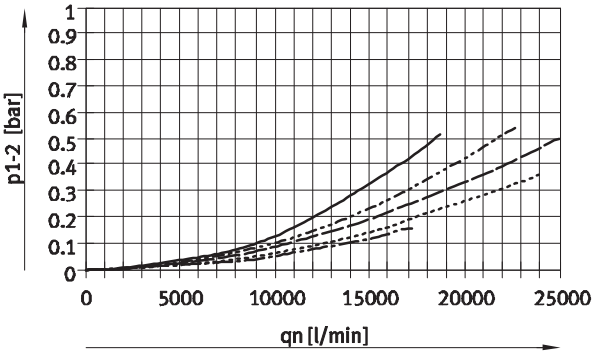

Grade of filtration 1 µm
With connecting plate MS12-AGI, Pneumatic connection G2

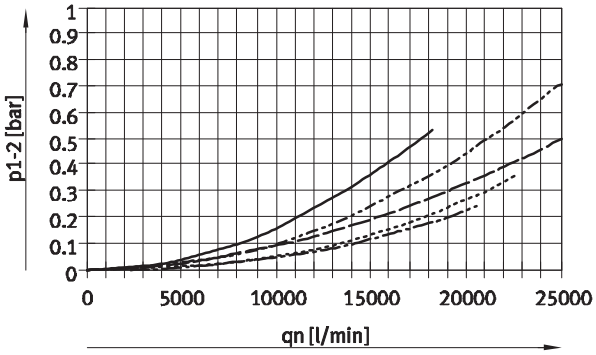

- p1: 4 bar
- p1: 6 bar
- p1: 8 bar
- p1: 10 bar
- p1: 12 bar

Dimensions – Standard Download CAD data ➔ **www.festo.com**

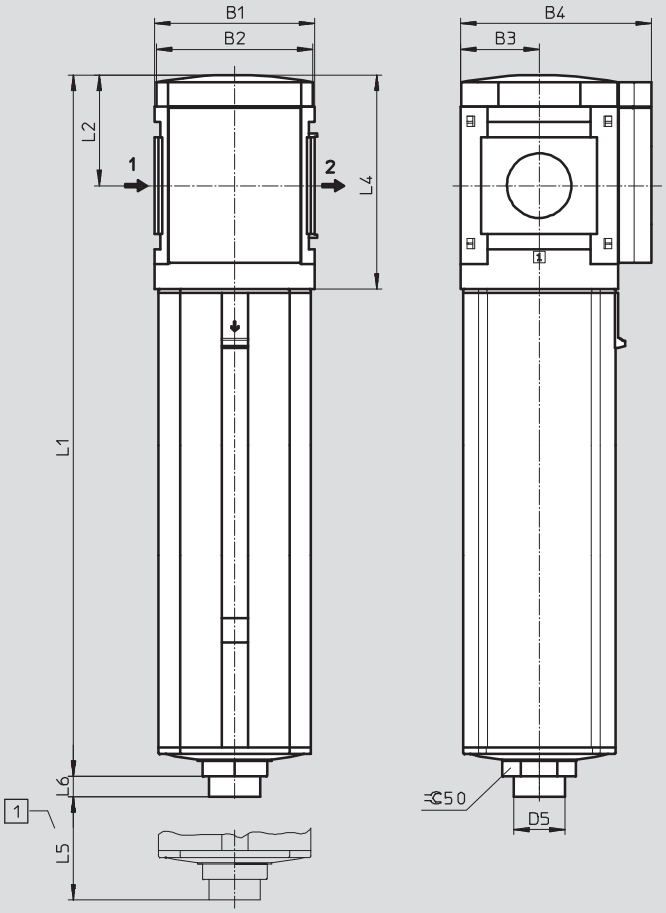

Type	B1	B2	B3	B4	D5 ∅	L1	L2	L4	L5	L6
MS12-LFM	124	122	61	148	40	543	86	166	350	16

Dimensions – Differential pressure indicator

Download CAD data ➔ **www.festo.com**

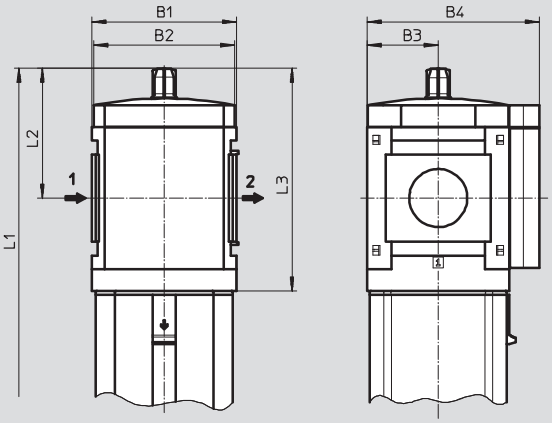

➔ Flow direction

Type	B1	B2	B3	B4	L1	L2	L3
MS12-LFM-...-DA	124	122	61	148	569	112	192

Dimensions – Condensate drain

Download CAD data ➔ **www.festo.com**

Manual rotary M

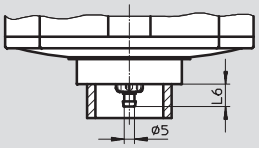

Barbed fitting for plastic tubing PCN-4

Type	L6
MS12-LFM-...-M	11

Fully automatic V

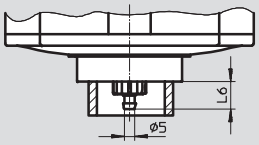

Barbed fitting for plastic tubing PCN-4

Type	L6
MS12-LFM-...-V	13

Fully automatic, electrically actuated E1 ... E4

Technical data ➔ Internet: pwea

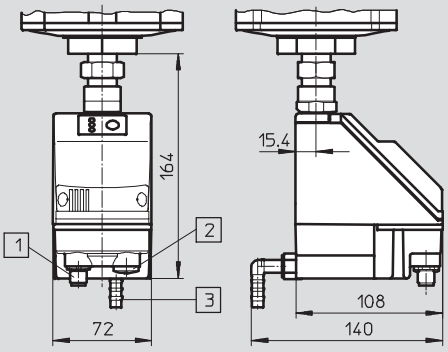

1 Variant E1
PWEA-AP-... with M12x1 plug, 5-pin for NEBU-M12...-LE5

2 Variant E2/E3/E4
PWEA-AC-... with cable conduit fitting Pg9

3 Connection 360° rotatable for plastic tubing PUN-H-12x2-...

Ordering data

Metal bowl

Size	Condensate drain	Connection	Micro filter Grade of filtration 0.01 µm		Fine filter Grade of filtration 1 µm	
			Part No.	Type	Part No.	Type
MS12	fully automatic	G1 ... G2[1]	**537154**	**MS12-LFM-G-AUV**	**537153**	**MS12-LFM-G-BUV**

1) Connecting plate must be ordered separately as an accessory ➔ Internet: ms12-ag

Note: This product conforms to ISO 1179-1 and to ISO 228-1

Fine and micro filters MS12-LFM, MS series

Ordering data – Modular products

M Mandatory data									O Options		
Module No.	Series	Size	Func-tion	Connec-tion size	Grade of filtration	Bowl	Conden-sate drain		Filter change sensor	Type of mounting	Alternative flow direction
535042	MS	12	LFM	AGF AGG AGH AGI G	B A	U	M V E1 E2 E3 E4		DA	WP	Z
Order example											
535042	MS	12 –	LFM –	AGI –	A –	U –	M –		–	–	

Ordering table						
Grid dimension [mm]		124	Condi-tions	Code		Enter code
M	Module No.	535042				
	Series	Standard		MS		MS
	Size	12		12		12
	Function	Fine and micro filter		-LFM		-LFM
	Connection size	Connecting plate G1		-AGF		
		Connecting plate G1¼		-AGG		
		Connecting plate G1½		-AGH		
		Connecting plate G2		-AGI		
		Module without connecting thread, without connecting plate		-G		
	Grade of filtration	1 µm		-B		
		0.01 µm		-A		
	Bowl	Metal bowl		-U		-U
	Condensate drain	Manual		-M		
		Fully automatic (P1 max. 12 bar)		-V		
		External fully automatic condensate drain, electrical, 24 V DC, M12		-E1		
		External fully automatic condensate drain, electrical, 110 V AC, terminals		-E2		
		External fully automatic condensate drain, electrical, 230 V AC, terminals		-E3		
		External fully automatic condensate drain, electrical, 24 V DC, terminals		-E4		
O	Filter change sensor	Differential pressure indicator, optical		-DA		
	Type of mounting	Mounting bracket	1	-WP		
	Alternative flow direction	Flow direction from right to left		-Z		

1 **WP** Only with connecting plate AGF, AGG, AGH or AGI.

Transfer order code

535042	MS	12	–	LFM	–		–		–	U	–		–		–		

Active carbon filters MS12-LFX, MS series

Peripherals overview

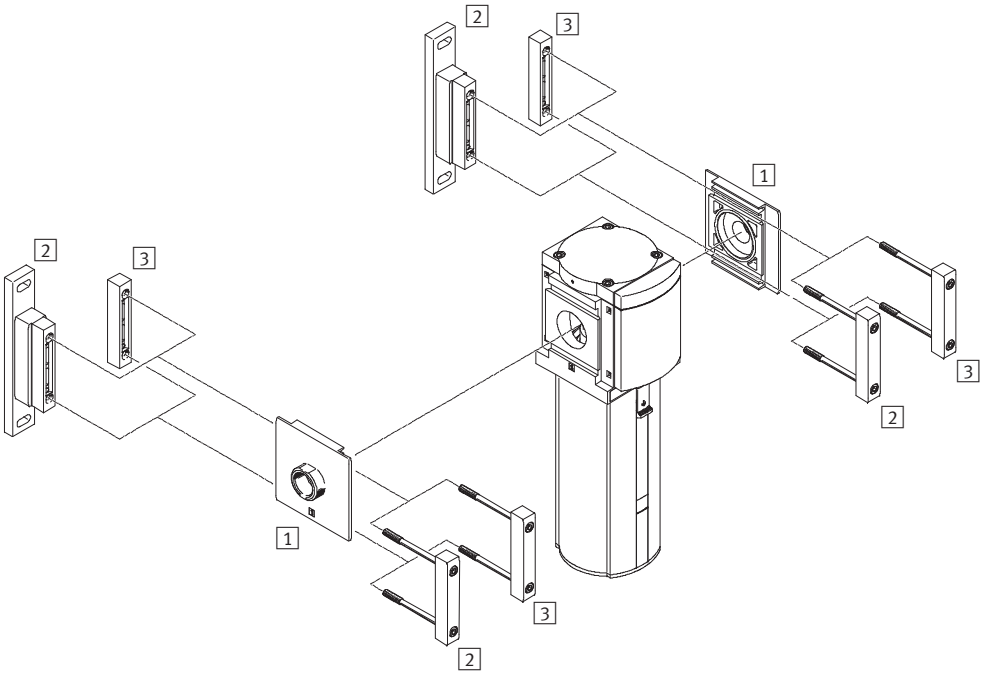

- Note

Additional accessories:

– Module connector for combination with size MS9 ➔ Internet: armv

Mounting attachments and accessories		
		➔ Page/Internet
1	Connecting plate MS12-AG...	ms12-ag
2	Mounting bracket MS12-WP	ms12-wp
3	Module connector MS12-MV	ms12-mv

Active carbon filters MS12-LFX, MS series

Type codes

MS	12	–	LFX	–	G	–	U

Series	
MS	Standard service unit

Size	
12	Grid dimension 124 mm

Service function	
LFX	Active carbon filter

Connection size	
G	Module without connecting thread, without connecting plate Connecting plates ➔ Accessories

Bowl guard	
U	Metal bowl

Further variants can be ordered using the modular system ➔ 84

- Connecting plates
- Type of mounting
- Alternative flow direction

Active carbon filters MS12-LFX, MS series

Technical data

Function

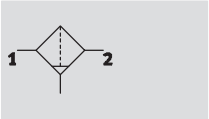

Flow rate
5,065 … 15,190 l/min

Temperature range
–10 … +60 °C

Input pressure
0 … 20 bar

- Removal of liquid and gaseous oil particles from compressed air using active carbon
- Eliminates odours and vapours
- Prefiltration with micro filter MS12-LFM-A, grade of filtration 0.01 µm, recommended
- New filter cartridges ➔ 87

General technical data				
Pneumatic connection 1, 2[1]	G1	G1¼	G1½	G2
Design	Active carbon filter			
Type of mounting	Via accessories			
	In-line installation			
Assembly position	Vertical ±5°			
Air purity class at the output[2]	1.7.1 to DIN ISO 8573-1			
Bowl guard	Metal bowl			
Residual oil content [mg/m³]	≤ 0.003			

1) Dependent on connecting plate selected, must be ordered separately as an accessory ➔ Internet: ms12-ag
2) We recommend that the filter cartridge be replaced by a new one after 1,000 operating hours. (Applies to an ambient temperature of 21 °C. At higher temperatures the service life of the filter cartridge will be reduced.)
Note: This product conforms to ISO 1179-1 and to ISO 228-1

Standard flow rate q_n [l/min]				
Input pressure p_1	4 bar	6 bar	10 bar	14 bar
Max. standard flow rate for air purity class $q_{n\ max}$	5,065	7,090	11,150	15,190

Operating and environmental conditions		
Input pressure p_1	[bar]	0 … 20
Operating medium		Compressed air, filtered, unlubricated, grade of filtration 0.01 µm
Ambient temperature	[°C]	–10 … +60
Temperature of medium	[°C]	+5 … +30
Storage temperature	[°C]	–10 … +60
Corrosion resistance	CRC[1]	2

1) Corrosion resistance class 2 according to Festo standard 940 070
Components requiring moderate corrosion resistance. Externally visible parts with primarily decorative surface requirements which are in direct contact with a normal industrial environment or media such as coolants or lubricating agents.

Weights [g]	
Active carbon filter with metal bowl U	7,000

Active carbon filters MS12-LFX, MS series

Technical data

Materials

Sectional view

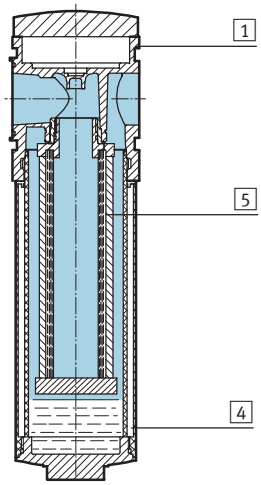

Active carbon filter		
1	Body	Die-cast aluminium
4	Metal bowl	Wrought aluminium alloy
5	Filter	Active carbon
–	Seals	Nitrile rubber
	Note on materials	Free of copper and PTFE

Standard flow rate qn as a function of the differential pressure p1-2

With connecting plate MS12-AGF, Pneumatic connection G1

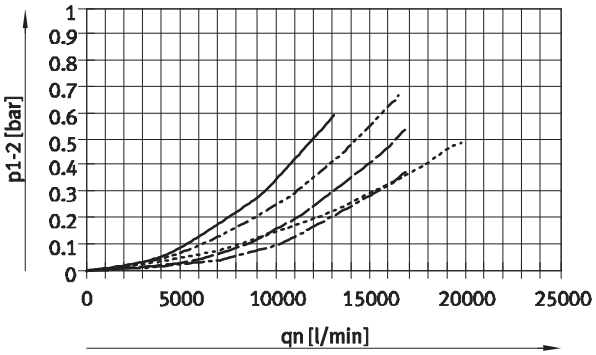

With connecting plate MS12-AGG, Pneumatic connection G1¼

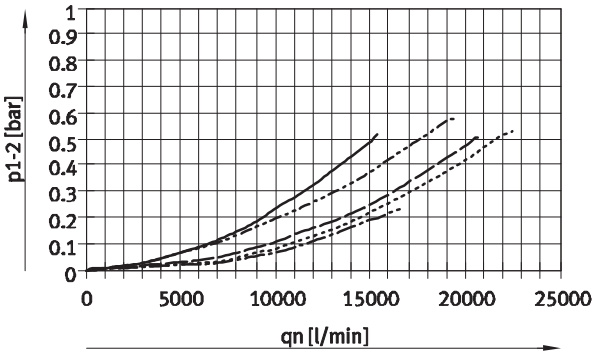

With connecting plate MS12-AGH, Pneumatic connection G1½

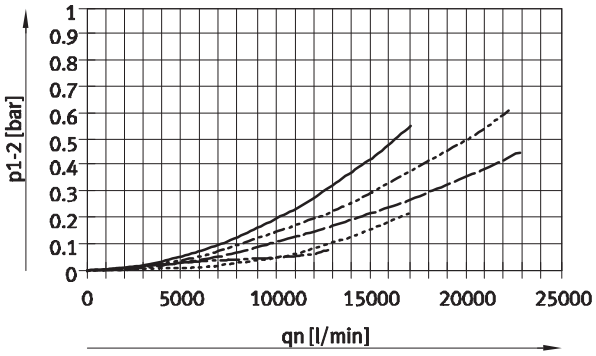

With connecting plate MS12-AGI, Pneumatic connection G2

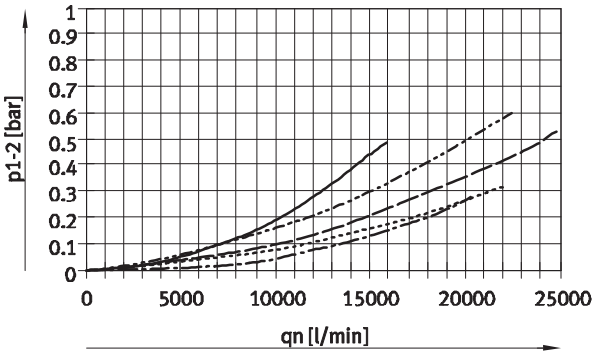

- p1: 4 bar
- p1: 6 bar
- p1: 8 bar
- p1: 10 bar
- p1: 12 bar

Dimensions – Standard Download CAD data ➔ **www.festo.com**

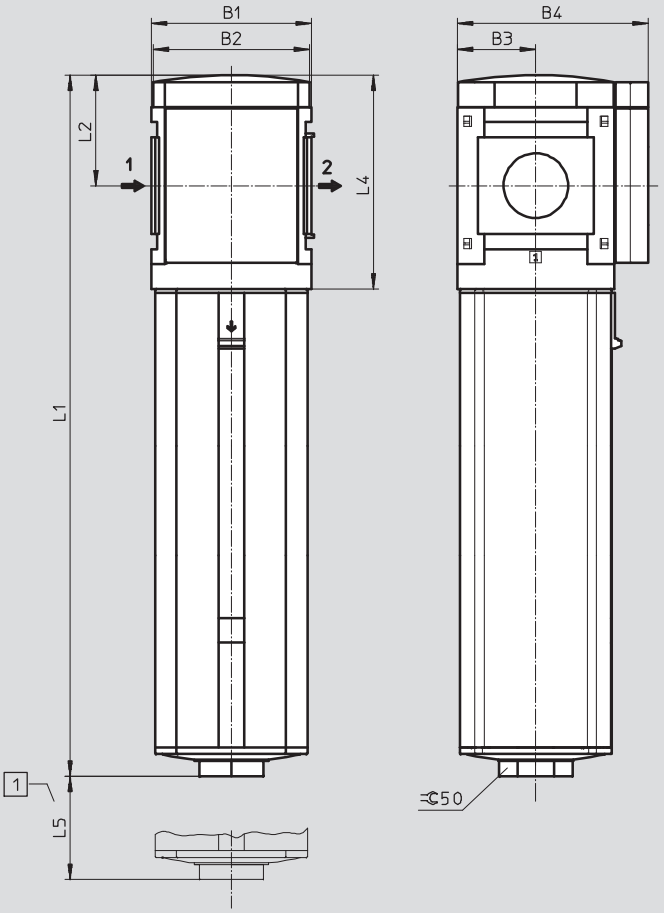

1 Installation dimensions

➔ Flow direction

Type	B1	B2	B3	B4	L1	L2	L4	L5
MS12-LFX	124	122	61	148	543	86	166	350

Ordering data			
Metal bowl			
Size	Connection	Part No.	Type
MS12	G1 ... G2[1)]	**537155**	**MS12-LFX-G-U**

1) Connecting plate must be ordered separately as an accessory ➔ Internet: ms12-ag

Note: This product conforms to ISO 1179-1 and to ISO 228-1

Active carbon filters MS12-LFX, MS series

Ordering data – Modular products

M Mandatory data												O Options		
Module No.	Series	Size		Function		Connection size		Bowl		Type of mounting		Alternative flow direction
535043	MS	12		LFX		AGF AGG AGH AGI G		U		WP		Z
Order example												
535043	MS	12	–	LFX	–	AGF	–	U	–	WP	–	Z

Ordering table

Grid dimension [mm]		124	Condi-tions	Code		Enter code
M	Module No.	535043				
	Series	Standard		MS		MS
	Size	12		12		12
	Function	Active carbon filter		-LFX		-LFX
	Connection size	Connecting plate G1		-AGF		
		Connecting plate G1¼		-AGG		
		Connecting plate G1½		-AGH		
		Connecting plate G2		-AGI		
		Module without connecting thread, without connecting plate		-G		
	Bowl	Metal bowl		-U		-U
O	Type of mounting	Mounting bracket	1	-WP		
	Alternative flow direction	Flow direction from right to left		-Z		

1 **WP** Only with connecting plate AGF, AGG, AGH or AGI.

Transfer order code

535043	MS	12	–	LFX	–		–	U	–		–			

Filters MS-LF/LFM/LFX, MS series

Accessories

FESTO

Filter cartridges, MS4/MS6 series

MS...-LFM

MS...-LFP

MS...-LFX

Ordering data				
Size	Filter cartridge	Grade of filtration [µm]	Part No.	Type
MS4	Micro-filter cartridge	0.01	**162674**	**MS4/D-MINI-LFM-A**
	Fine-filter cartridge	1	**162677**	**MS4/D-MINI-LFM-B**
	Filter cartridge (colour: blue)	5	**534501**	**MS4-LFP-C**
	Filter cartridge (colour: white)	40	**534502**	**MS4-LFP-E**
	Activated carbon filter cartridge	–	**532912**	**MS4/D-MINI-LFX**
MS6	Micro-filter cartridge	0.01	**532909**	**MS6-LFM-A**
	Fine-filter cartridge	1	**532910**	**MS6-LFM-B**
	Filter cartridge (colour: blue)	5	**534499**	**MS6-LFP-C**
	Filter cartridge (colour: white)	40	**534500**	**MS6-LFP-E**
	Activated carbon filter cartridge	–	**532911**	**MS6-LFX**
High flow rate HF				
MS6	Micro-filter cartridge	0.01	**552093**	**MS6-LFM-A-HF**
	Fine-filter cartridge	1	**552092**	**MS6-LFM-B-HF**
	Activated carbon filter cartridge	–	**552094**	**MS6-LFX-HF**
Range of application HP, suitable for sealing air and cleaning air				
MS6	Micro-filter cartridge	0,01	**547922**	**MS6-LFM-AI:T**
	Fine-filter cartridge	1	**547923**	**MS6-LFM-BI:T**
	Activated carbon filter cartridge	–	**547925**	**MS6-LFX-AKI:T**

Filters MS-LF/LFM/LFX, MS series

Accessories

FESTO

Filter cartridges, MS9 series

MS9-LFM

MS9-LFX

Ordering data				
Size	Filter cartridge	Grade of filtration [µm]	Part No.	Type
MS9	Micro-filter cartridge	0.01	**553036**	**MS9-LFM-A**
	Fine-filter cartridge	1	**553037**	**MS9-LFM-B**
	Activated carbon filter cartridge	–	**552946**	**MS9-LFX**
High flow rate HF				
MS9	Micro-filter cartridge	0.01	**552944**	**MS9-LFM-A-HF**
	Fine-filter cartridge	1	**552945**	**MS9-LFM-B-HF**

Filter cartridges, MS12 series

MS12-LFM-B

MS12-LFM-A

MS12-LFX

Ordering data				
Size	Filter cartridge	Grade of filtration [µm]	Part No.	Type
MS12	Micro-filter cartridge	0.01	**537146**	**MS12-LFM-A**
	Fine-filter cartridge	1	**537145**	**MS12-LFM-B**
	Filter cartridge	5	**537143**	**MS12-LFP-C**
	Filter cartridge	40	**537144**	**MS12-LFP-E**
	Activated carbon filter cartridge	–	**537147**	**MS12-LFX**