New

Solenoid valves VMPA1

FESTO

- Straightforward valve replacement
- Flow rates of up to 360 l/min
- Also available as a modular multi-functional valve terminal for up to 64 valves

Solenoid valves VMPA1

Key features

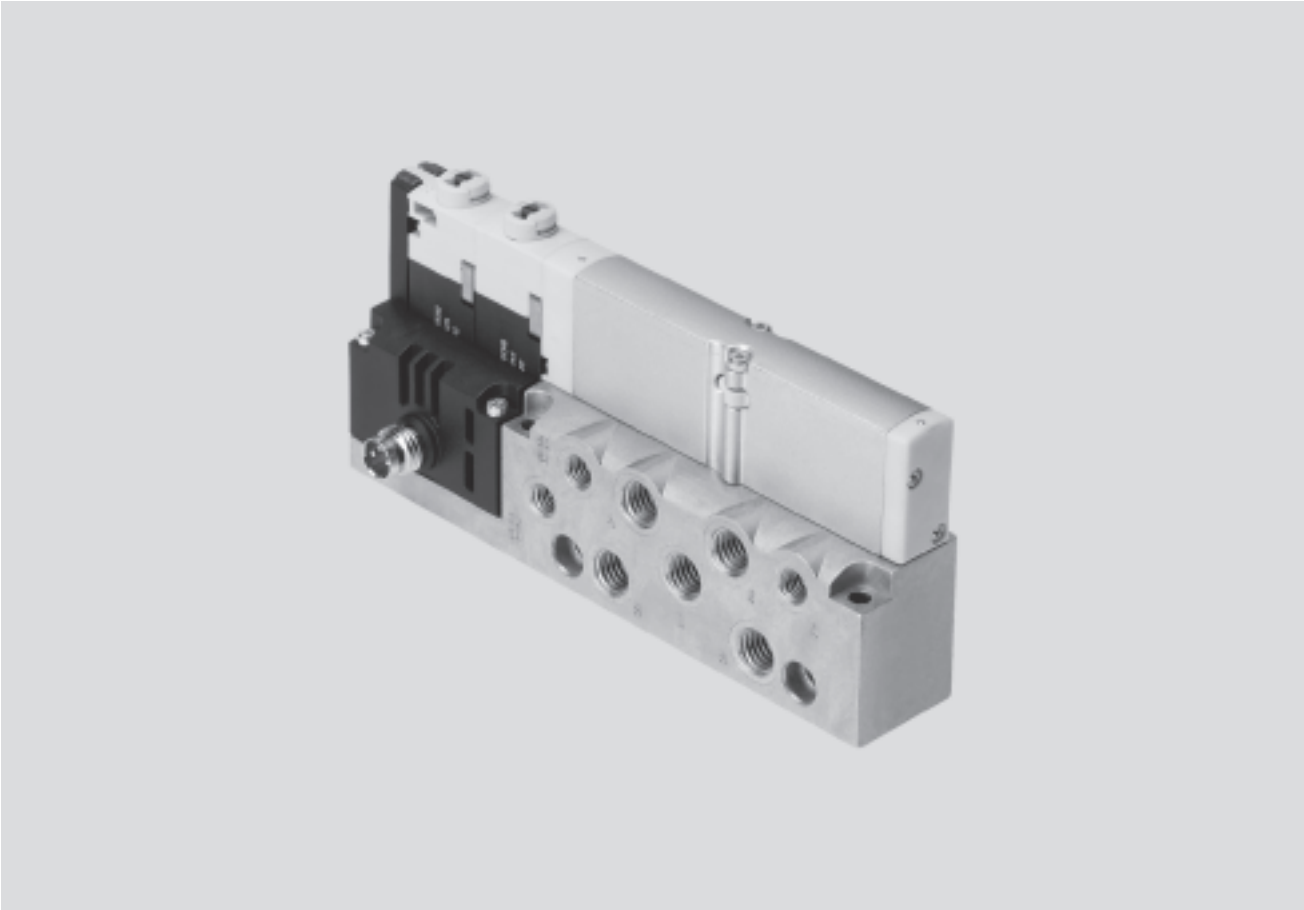

Innovative

- Slim high-performance valves in sturdy metal housing, size MPA1 up to 360 l/min

The valves are identical with the valves in the valve terminal MPA. This simplifies planning, ordering and warehousing.

Flexible

- High pressure range –0.9 ... 10 bar
- Wide range of valve functions

Reliable

- Sturdy and durable metal components
  - Valves
  - Sub-bases
  - Seals
- Fast troubleshooting thanks to LEDs on the valves and diagnosis via fieldbus
- High operating voltage tolerance ±25%
- Reliable servicing through replaceable valves and electronics modules
- Manual override either push-in, detenting or secured against unauthorised activation (covered)
- Durable thanks to the use of tried-and-tested piston spool valves
- Secure wall mounting

Solenoid valves VMPA1

Key features

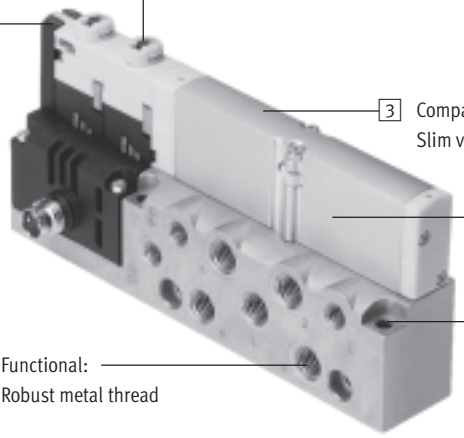

Equipment options

Valve functions

- 5/2-way valve, single solenoid
- 5/2-way valve, double solenoid
- 2x 3/2-way valve, normally open
- 2x 3/2-way valve, normally closed
- 2x 3/2-way valve, 1x normally open, 1x normally closed
- 5/3-way valve, mid-position pressurised
- 5/3-way valve, mid-position closed
- 5/3-way valve, mid-position exhausted
- 2x 2/2-way valve, normally closed

Special features

- Electrical M8 connection, 4-pin with screw connection
- Detachable electronics module with integrated holding current reduction

Solenoid valves VMPA1

Peripherals overview

FESTO

Individual sub-base

Ordering:
- Using individual part numbers

Individual sub-bases can be equipped with any valve.

The electrical connection is established using a standard 4-pin M8 plug (VDMA 24 571).

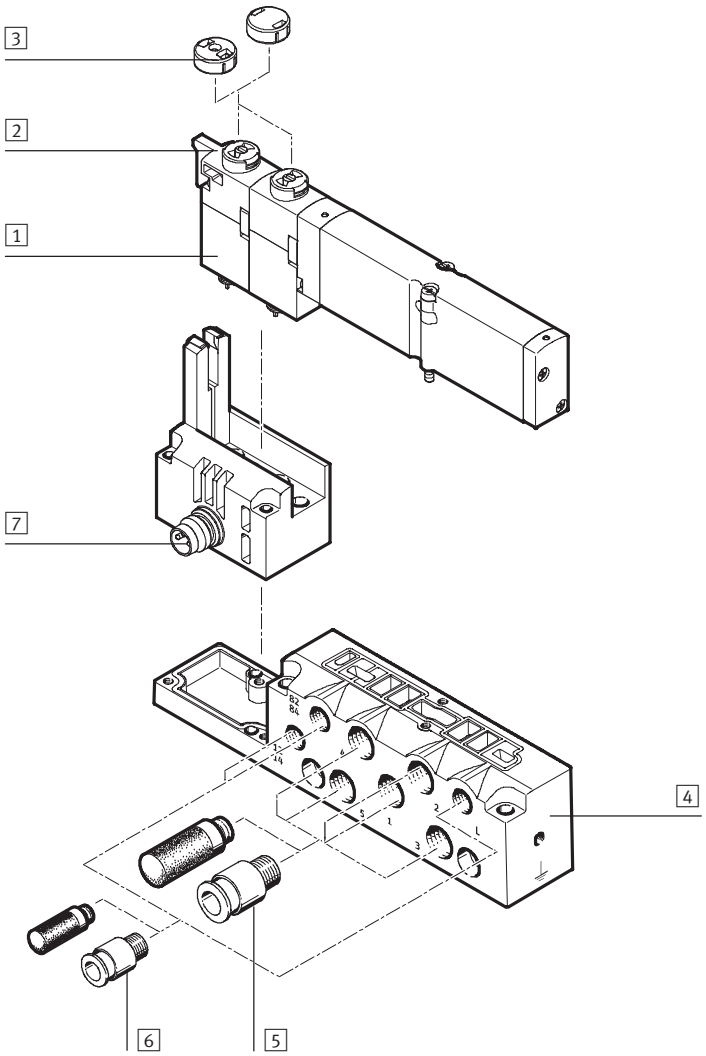

1 MPA valve
2 Manual override (per solenoid coil, push-in/rotary-detenting)
3 Cover for manual override (push-in, covered only)
4 Sub-base for individual valve
5 Threaded connectors and/or silencers M7 for working lines (2, 4) and supply air/exhaust ports (1, 3, 5)
6 Threaded connectors, silencers or blanking plugs M5 for pilot air supply/exhaust ports (12/14, 82/84) and pressure compensation
7 Electrical connection M8, 4-pin

Solenoid valves VMPA1

Key features – Pneumatic components

FESTO

Sub-base valve

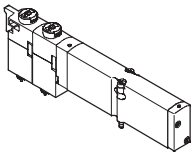

MPA offers a comprehensive range of valve functions. All valves are equipped with piston spool and patented sealing system which facilitates efficient sealing, a broad pressure range and long service life. To increase power they have a pneumatic pilot control supplied by auxiliary pilot air.

Sub-base valves can be quickly replaced since the pipe connection remains on the sub-base. This design is also particularly slim.

Irrespective of the valve function there are sub-base valves with one solenoid coil (single solenoid) or with two solenoid coils (double solenoid).

Valve function

Code	Circuit symbol	Size 10	Description
M		■	5/2-way valve, single solenoid • Pneumatic spring return
J	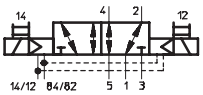	■	5/2-way valve, double solenoid
N	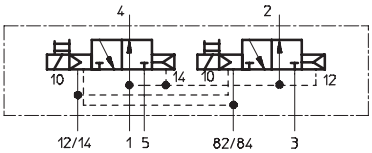	■	2x 3/2-way valve, single solenoid • Normally open • Pneumatic spring return
K	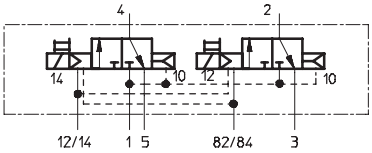	■	2x 3/2-way valve, single solenoid • Normally closed • Pneumatic spring return
H	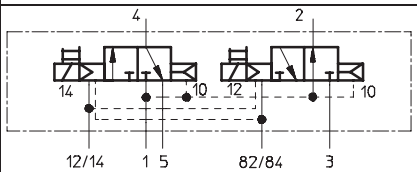	■	2x 3/2-way valve, single solenoid • Normal position 1x open 1x closed • Pneumatic spring return
B	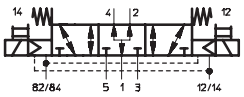	■	5/3-way valve • Mid-position pressurised[1)] • Mechanical spring return
G	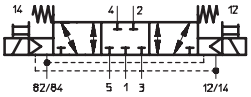	■	5/3-way valve • Mid-position closed[1)] • Mechanical spring return

1) Mid-position can be reached without electrical signal or using both signals

Solenoid valves VMPA1

Key features – Pneumatic components

FESTO

Valve function			
Code	Circuit symbol	Size 10	Description
E	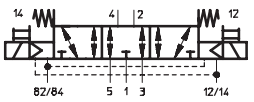	■	5/3-way valve • Mid-position exhausted[1)] • Spring force return
D	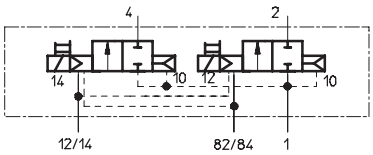	■	2x 2/2-way valve • Normally closed • Pneumatic spring return

1) Mid-position can be reached without electrical signal or using both signals

Constructional design

Valve replacement

The valves are attached to the metal sub-base using two screws. This means that they can be easily replaced. The mechanical robustness of the sub-base guarantees good long-term tightness.

The valve code (M, J, N, K, B, G, E, D) is located on the front of the valve beneath the manual override.

Pilot air supply

The port for the main pneumatic supply is located on the sub-base. The ports differ for the following auxiliary pilot air types:

- internal auxiliary pilot air and
- external auxiliary pilot air

Internal pilot air

An internal pilot air supply can be selected if the required working pressure is between 3 and 8 bar.
The pilot air is then branched from the compressed air supply 1 at the sub-base using an internal connection.
The port 12/14 is sealed at the factory.

External pilot air

If the supply pressure is less than 3 bar or greater than 8 bar, you must operate your MPA valve using an external pilot air supply. In this case the pilot air is supplied externally via port 12/14 in the sub-base.

Note

If a slow pressure rise by means of a soft-start valve is required in the equipment, external auxiliary pilot air should be selected whereby the pilot pressure applied during switch-on is already very high.

Sub-base variants				
Code		Size 10	Number of valve positions (solenoid coils)	Notes
–	Individual connection			
	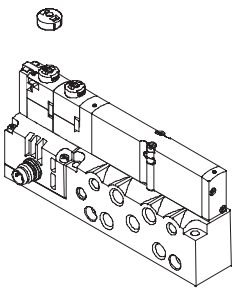 VMPA1-M1H-...-M7-PI	■	1 (max. 2)	• With working lines M7 • With ports M7 for supply air (1, 3, 5) and M5 for auxiliary pilot and pilot exhaust air (12/14, 82/84)

Solenoid valves VMPA1

Key features – Assembly and operation

FESTO

Individual valve assembly

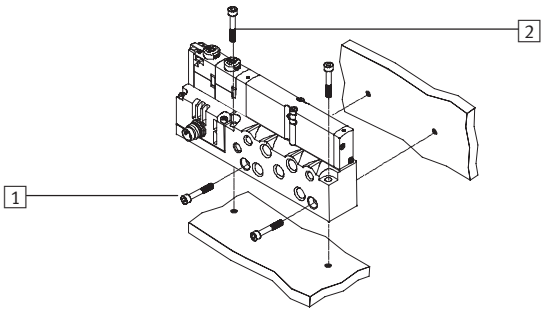

The individual sub-base is designed for wall mounting for integration into a system or machine. It can be mounted horizontally or vertically:

1 Horizontal mounting holes
2 Vertical mounting holes

Display and operation

Each valve solenoid coil is allocated an LED which indicates its switching status.

- Indicator 12 shows the switching status of the pilot control for output 2
- Indicator 14 shows the switching status of the pilot control for output 4

Manual override

The manual override (MO) allows the valve to be switched when in the electrically non-activated or de-energised status.

The valve is switched by pushing the manual override. The set switching status can also be locked by rotating the manual override (code: R).

Alternatives:

- A cover (code: N) can be fitted over the manual override to prevent it from being locked. The valve can then only be activated by pushing it.
- A cover (code: V) can be fitted over the manual override to prevent it from being activated accidentally.

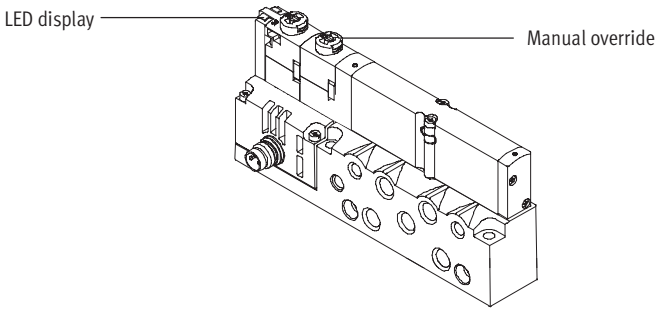

Note

A manually actuated valve (manual override) cannot be reset electrically. Conversely, an electrically actuated valve cannot be reset using the mechanical manual override.

Manual override (MO)

Manual override with automatic return (push-in)

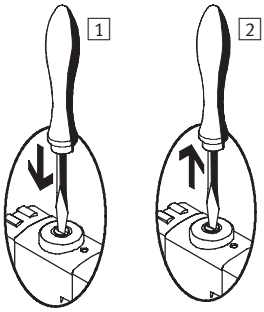

1 Press in the stem of the MO with a pointed object or screwdriver.
⇢ Valve is in switching position

2 Remove the pointed object or screwdriver.
Spring force pushes the stem of the MO back.
⇢ Valve returns to initial position (not with double solenoid valve code J)

Manual override with lock (detenting)

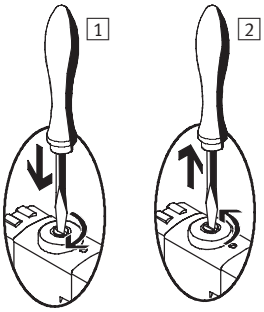

1 Press in the stem of the MO using a screwdriver until the valve switches and then turn the stem clockwise by 90° until the stop is reached.
⇢ Valve remains in switching position

2 Turn the stem anti-clockwise by 90° until the stop is reached and then remove the pin or screwdriver. Spring force pushes the stem of the MO back.
⇢ Valve returns to initial position (not with double solenoid valve code J)

Solenoid valves VMPA1

Key features – Electrical components

FESTO

Electrical power as a result of current reduction

Each valve solenoid coil is protected with a spark arresting protective circuit as well as against polarity reversal.
All valve types are additionally equipped with an integrated current reduction, e.g. for fieldbus:

- Pull current: 60 mA
- Holding current after 20 ms: 25 mA

MPA valves are supplied with operating voltage in the range 18 ... 30 V (24 V +/–25%). This high tolerance is made possible through integrated control electronics and offers additional security, e.g. if the operating voltage drops.

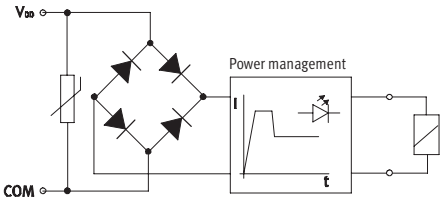

Electrical connection

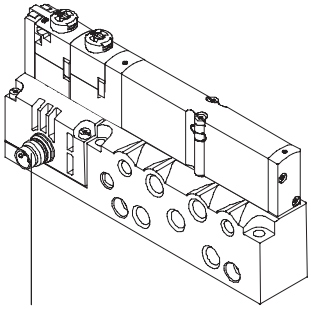

Connector plug M8 x 1, 4-pin to EN 60 947-5-2

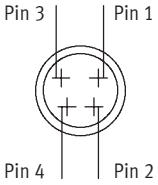

Pin allocation on individual valve to VDMA 24 571

With positive logic:
Pin 1 – Not allocated
Pin 2 – U_B for coil 12
Pin 3 – 0 V for coils 12 and 14
Pin 4 – U_B for coil 14

With negative logic:
Pin 1 – Not allocated
Pin 2 – 0 V for coil 12
Pin 3 – U_B for coils 12 and 14
Pin 4 – 0 V for coil 14

Tightening torque for M8 plug
0.25 ... 0.5 Nm (manual torque)

Connecting cable

Designation	Version	Cable length [m]	Part No.	Type
Plug socket with cable	Straight socket	2.5	**158 960**	**SIM-M8-4GD-2,5-PU**
Plug socket with cable	Straight socket	5	**158 961**	**SIM-M8-4GD-5-PU**
Plug socket with cable	Angled socket	2.5	**158 962**	**SIM-M8-4WD-2,5-PU**
Plug socket with cable	Angled socket	5	**158 963**	**SIM-M8-4WD-5-PU**

Solenoid valves VMPA1

Instructions for use

FESTO

Pneumatic equipment

Operate your equipment with unlubricated compressed air if possible. Festo valves and cylinders are designed for operation under normal use without any additional lubrication, yet still have a long service life. The quality of compressed air downstream from the compressor must correspond to that of unlubricated compressed air. If possible, do not operate all of your equipment with lubricated compressed air. The lubricators should, where possible, always be installed directly upstream of the actuator used.

Incorrect additional oil and too high an oil content in the compressed air reduce the service life of the valve terminal.
Use Festo special oil OFSW-32 or the alternatives listed in the Festo catalogue (as specified in DIN 51 524-HLP32; basic oil viscosity 32 CST at 40 °C).

Bio-oils
When using bio-oils (oils which are based upon synthetic or native ester, e.g. rapeseed oil methyl ester), the maximum residual oil content of 0.1 mg/m^3 must not be exceeded (see ISO 8573-1 Class 2).

Mineral oils
When using mineral oils (e.g. HLP oils to DIN 51 524, parts 1 through 3) or similar oils based on poly-alpha-olefins (PAO), the maximum residual oil content of 5 mg/m^3 must not be exceeded (see ISO 8573-1 Class 4).
A higher residual oil content irrespective of the compressor oil cannot be permitted, as the basic lubricant would be flushed out over time.

Solenoid valves VMPA1

Technical data

FESTO

- Flow rates of up to 360l/min
- Valve width 10 mm
- Voltage 24 V DC

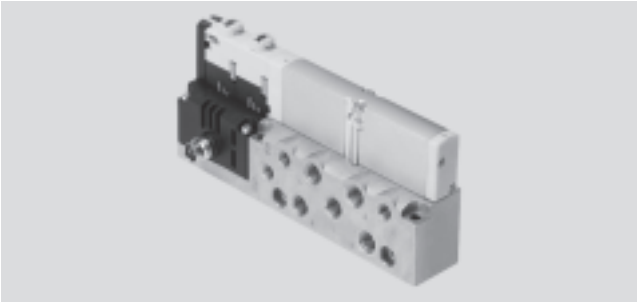

General technical data									
Valve function	5/2-way valve		2x 3/2-way valve			5/3-way valve			2x 2/2-way valve
			Normal position			Mid-position			
	single solenoid	double solenoid	open	closed	1x open 1x closed	pressur-ised	closed	exhausted	closed
Valve function order code	M	J	N	K	H	B	G	E	D
Constructional design	Electromagnetically actuated piston spool valve								
Width [mm]	10								
Nominal size [mm]	3.5	3.5	3.2	2.8	3.1	3.1	3.3	2.8	2.8
Lubrication	Lubrication for life, PWIS-free (free of paint-wetting impairment substances)								
Type of mounting	Wall mounting								
Mounting position	Any								
Manual override	Push-in, rotary/detenting, covered								
Pneumatic connections									
Pneumatic connection	Via individual connections on sub-base								
Supply port 1	M7								
Exhaust port 3/5	M7								
Working lines 2/4	M7								
Pilot air port 12/14	M5								
Pilot exhaust air port 82/84	M5								
Pressure compensation port	M5								

Solenoid valves VMPA1

Technical data

Operating pressure [bar]									
Valve function order code	M	J	N	K	H	B	G	E	D
Internal auxiliary pilot air	3 ... 8								
External auxiliary pilot air	–0.9 ... +10		3 ... 10			–0.9 ... +10			3 ... 10

Pilot pressure p2 as a function of the working pressure p1 with external pilot air supply

for valves with code M, J, B, G, E

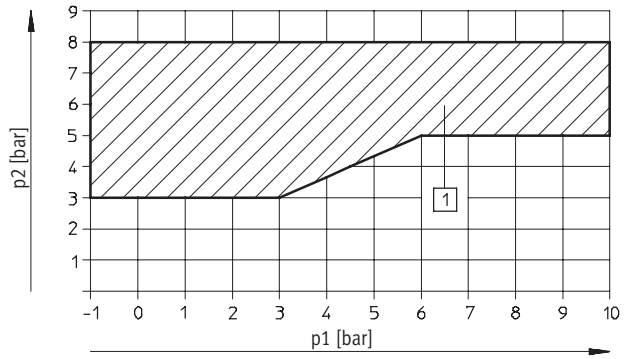

1 Operating range for valves with external pilot air

for valves with code N, K, H, D

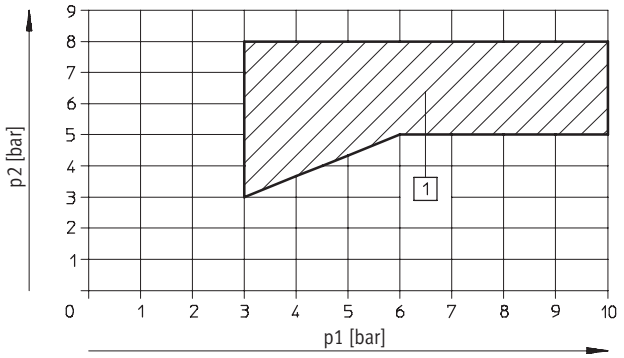

1 Operating range for valves with external pilot air

Valve response times [ms]										
Valve function order code		M	J	N	K	H	B	G	E	D
Response times	on	10	–	10	10	10	10	10	10	10
	off	20	–	20	20	20	35	35	35	20
	change-over	–	10	–	–	–	–	–	–	–

Operating and environmental conditions										
Valve function order code		M	J	N	K	H	B	G	E	D
Operating medium		Filtered compressed air, lubricated or unlubricated, inert gases								
Grade of filtration	[µm]	40 (average pore size)								
Ambient temperature	[°C]	–5 ... +50								
Storage temperature[2]	[°C]	–20 ... +40								
Corrosion resistance class CRC[1]		1								

1) Corrosion resistance class 1 according to Festo standard 940 070
Components requiring low corrosion resistance. Transport and storage protection. Parts that do not have primarily decorative surface requirements, e.g. in internal areas that are not visible or behind covers.
2) Long-term storage

Solenoid valves VMPA1

Technical data

FESTO

Electrical data									
Valve function order code	M	J	N	K	H	B	G	E	D
Electromagnetic compatibility	Interference emission tested to EN 61 000-6-4, industry								
	Interference immunity[1] tested to EN 61 000-6-2, industry								
Protection against electric shock (protection against direct and indirect contact to EN 60204-1/IEC 204)	By means of PELV power supply unit								
Operating voltage [V]	24 (±25%)								
Current consumption per solenoid coil									
at 18 V	Nominal pull current (up to 20 ms) 60 mA/nominal current with current reduction (after 20 ms) 20 mA								
at 24 V	Nominal pull current (up to 20 ms) 80 mA/nominal current with current reduction (after 20 ms) 20 mA								
at 30V	Nominal pull current (up to 20 ms) 100 mA/nominal current with current reduction (after 20 ms) 20 mA								
Electrical power consumption [W]	Pull: 1 Hold: 0.24								
Duty cycle	100% at 40 °C ambient temperature								
Protection class to EN 60 529	IP65 (in assembled state and with detenting plug)								
Relative air humidity	90% at 40 °C, non-condensing								
Vibration resistance	To DIN/IEC 68/EN 60 068, Parts 2-6: 0.35 mm at 10 … 60 Hz, 5 g at 60 … 150 Hz								
Shock resistance	To DIN/IEC 68/EN 60 068, Parts 2-27: +/–30 g at 11 ms, 15 cycles								
Continuous shock resistance	To DIN/IEC 68/EN 60 068, Parts 2-29: +/–15 g at 6 ms, 1000 cycles								

1) The maximum signal line length is 10 m
2) Intrinsic current consumption per electronics module

Materials									
Valve function order code	M	J	N	K	H	B	G	E	D
Sub-base	Die-cast aluminium								
Valve	Die-cast aluminium, PPS, ST, PA-GF								
Seals	NBR, HNBR, Elastomer								
Supply plate	Die-cast aluminium								
Right-hand end plate	Die-cast aluminium								
Left-hand pneumatic interface	Die-cast aluminium, polyamide 6 (cover)								
Exhaust plate	Polyamide								
Surface mounted silencer	Polyethylene								
Electronics module	POM/polycarbonate								
Electrical interlinking	CuBe/PBT								

Solenoid valves VMPA1

Technical data

Product weight [g]	approx. weights								
Valve function order code	M	J	N	K	H	B	G	E	D
Individual sub-base	45								
per valve M	49								
per valve J, N, K, H, B, G, E, D	56								
QSM-M5-3-I	3								
QSM-M5-4-I	4								
QSM-M5-6-I	5								
QSM-M7-4-I	4								
QSM-M7-6-I	5								

1) With thin metal seal, inscription label holder, screws

Nominal flow rate [l/min][1]			
Code	Valve function	Valve (1 → 2)[2]	Valve (2 → 3)[2]
Sub-base valve			
M	5/2-way valve, single solenoid	360	360
J	5/2-way valve, double solenoid	360	360
N	2x 3/2-way valve, normally open	300	300
K	2x 3/2-way valve, normally closed	230	310
H	2x 3/2-way valve, 1x normally open 1x normally closed	280	305
B	5/3-way valve, mid-position pressurised	300	270
G	5/3-way valve, mid-position closed	320	320
E	5/3-way valve, mid-position exhausted	240	240
D	2x 2/2-way valve	230	230

1) Flow rates measured on sub-base with QS-6 push-in fittings
2) Values refer to the flow direction 1 → 2 or 2 → 3

Solenoid valves VMPA1

Technical data

FESTO

Dimensions Download CAD data ➔ **www.festo.com**

Valve on individual sub-base

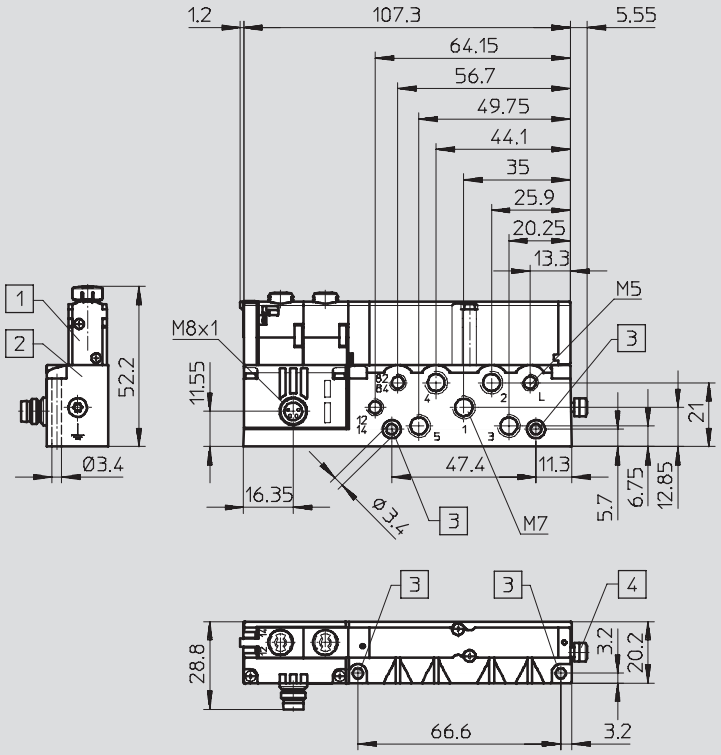

1 Solenoid valve
2 Individual sub-base
3 4x mounting holes
4 Earthing screw

Solenoid valves VMPA1

Ordering data

FESTO

Ordering data				
Valves on individual sub-base				
	Code	Valve function	Part No.	Type
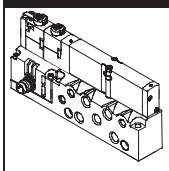	Internal pilot air			
	M	5/2-way valve, single solenoid	**533 376**	**VMPA1-M1H-M-M7-PI**
	J	5/2-way valve, double solenoid	**533 377**	**VMPA1-M1H-J-M7-PI**
	N	2x 3/2-way valve, normally open	**533 382**	**VMPA1-M1H-N-M7-PI**
	K	2x 3/2-way valve, normally closed	**533 381**	**VMPA1-M1H-K-M7-PI**
	H	2x 3/2-way valve, 1x normally open 1x normally closed	**533 383**	**VMPA1-M1H-H-M7-PI**
	B	5/3-way valve, mid-position pressurised	**533 378**	**VMPA1-M1H-B-M7-PI**
	G	5/3-way valve, mid-position closed	**533 379**	**VMPA1-M1H-G-M7-PI**
	E	5/3-way valve, mid-position exhausted	**533 380**	**VMPA1-M1H-E-M7-PI**
	D	2x 2/2-way valve, normally closed	**533 384**	**VMPA1-M1H-D-M7-PI**
	External pilot air			
	M	5/2-way valve, single solenoid	**533 385**	**VMPA1-M1H-MS-M7-PI**
	J	5/2-way valve, double solenoid	**533 386**	**VMPA1-M1H-JS-M7-PI**
	N	2x 3/2-way valve, normally open	**533 391**	**VMPA1-M1H-NS-M7-PI**
	K	2x 3/2-way valve, normally closed	**533 390**	**VMPA1-M1H-KS-M7-PI**
	H	2x 3/2-way valve, 1x normally open 1x normally closed	**533 392**	**VMPA1-M1H-HS-M7-PI**
	B	5/3-way valve, mid-position pressurised	**533 387**	**VMPA1-M1H-BS-M7-PI**
	G	5/3-way valve, mid-position closed	**533 388**	**VMPA1-M1H-GS-M7-PI**
	E	5/3-way valve, mid-position exhausted	**533 389**	**VMPA1-M1H-ES-M7-PI**
	D	2x 2/2-way valve, normally closed	**533 393**	**VMPA1-M1H-DS-M7-PI**

Solenoid valves VMPA1

Ordering data

FESTO

Ordering data				
Individual sub-base valve				
	Code	Valve function	Electrical plug-in connection	
			Part No.	Type
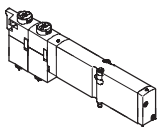	M	5/2-way valve, single solenoid	**533 342**	**VMPA1-M1H-M-PI**
	J	5/2-way valve, double solenoid	**533 343**	**VMPA1-M1H-J-PI**
	N	2x 3/2-way valve, normally open	**533 348**	**VMPA1-M1H-N-PI**
	K	2x 3/2-way valve, normally closed	**533 347**	**VMPA1-M1H-K-PI**
	H	2x 3/2-way valve, 1x normally open 1x normally closed	**533 349**	**VMPA1-M1H-H-PI**
	B	5/3-way valve, mid-position pressurised	**533 344**	**VMPA1-M1H-B-PI**
	G	5/3-way valve, mid-position closed	**533 345**	**VMPA1-M1H-G-PI**
	E	5/3-way valve, mid-position exhausted	**533 346**	**VMPA1-M1H-E-PI**
	D	2x 2/2-way valve, normally closed	**533 350**	**VMPA1-M1H-D-PI**

Solenoid valves VMPA1

Accessories

FESTO

Ordering data				
Designation			Part No.	Type
Sub-base				
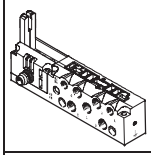	Individual connection, internal pilot air		533 394	VMPA1-IC-AP-1
	Individual connection, external pilot air		533 395	VMPA1-IC-AP-S-1
Cover				
	Cover for manual override, detenting (10 pieces)		533 366	VMPA1-HBT
	Cover for manual override, covered (10 pieces)		535 257	VMPA1-HBV
Individual connection, electrical				
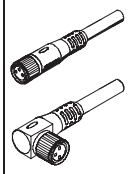	Plug socket with cable	2.5 m	158 960	SIM-M8-4GD-2,5-PU
		5 m	158 961	SIM-M8-4GD-5-PU
	Plug socket with cable	2.5 m	158 962	SIM-M8-4WD-2,5-PU
		5 m	158 963	SIM-M8-4WD-5-PU
Push-in fitting for sub-base				
	Connecting thread M5 for tubing O.D.	3 mm (10 pieces)	153 313	QSM-M5-3-I
		4 mm (10 pieces)	153 315	QSM-M5-4-I
		6 mm (10 pieces)	153 317	QSM-M5-6-I
	Connecting thread M7 for tubing O.D.	4 mm (10 pieces)	153 319	QSM-M7-4-I
		6 mm (10 pieces)	153 321	QSM-M7-6-I
Silencer				
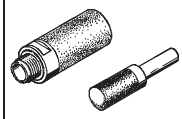	Connecting thread	M5	165 003	UC-M5
		M7	161 418	UC-M7
	Push-in sleeve connection type	3 mm	165 005	UC-QS-3H
		4 mm	165 006	UC-QS-4H
		6 mm	165 007	UC-QS-6H
Blanking plug				
	Thread M5		3 843	B-M5
	Thread M7		174 309	B-M7
Plug				
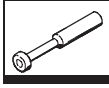	Blanking plug for tubing O.D.	4 mm	153 267	QSC-4H
		6 mm	153 268	QSC-6H