Filter Regulators MS4-LFR – Metric Series

A filter regulator combines a filter and a pressure regulator into a single unit. The sintered filter with water separator removes contamination, pipe sinter, rust and condensate from the compressed air. The pressure setting can be adjusted with the regulator.

- Pneumatic connection: G1⁄8, G1⁄4, G3⁄8
- Filtration grade: 5 µm, 40 µm
- Supply pressure
  – for manual drain: 0.8 … 14 bar
  – for semiautomatic drain: 1.5 … 12 bar
  – for fully automatic drain: 2 … 12 bar
- Controlled pressure range: 0.3 … 12 bar
- Flow rate: 850 … 1,900 l/min

Product Range Overview

Type	Pneumatic connections		Pressure regulation range [bar]			Filtration grade [µm]		Bowl guard		Bowl drain			Pressure indicator					Pressure adjustment		Reverse flow
	Body thread	Port plate	0.3 … 4	0.3 … 7	0.5 … 12	5	40	Plastic bowl guard	Metal bowl	Manual	Semiautomatic	Fully automatic	Cover plate (without pressure gauge)	Integrated MS pressure gauge	Adapter for pressure gauge G1⁄8	Adapter for pressure gauge G1⁄4	Pressure sensor with display	Rotary knob, lockable	Rotary knob, long	Flow direction from right to left
MS4		AG…	D5	D6	D7	C	E	R	U	M	H	V	VS	AG	A8	A4	AD…	AS	LD	Z
LFR	G1⁄8, G1⁄4	G1⁄8, G1⁄4, G3⁄8	■	■	■	■	■	■	■	■	■	■	■	■	■	■	■	■	■	■

Features

- Good control characteristics with low hysteresis and primary pressure compensation
- High flow rates
- Directly actuated diaphragm regulator
- Three pressure regulation ranges
- Modular, in-line or panel mounting
- Lockable rotary knob
- Available with or without secondary venting
- Two pressure gauge connections for different fitting options
- Reverse flow option for exhausting from output 2 to output 1
- Optional pressure sensor with display and electric output

Contents

Technical Data	→ 98
Dimensional Drawings	→ 102
Ordering Data	→ 105
Accessories	→ 108
Replacement Parts	→ 118

→ www.festo.com/catalog/ms4-lfr

Filter Regulators MS4-LFR – Metric Series

Technical Data

ISO Symbol

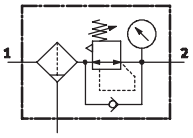

Manual bowl drain

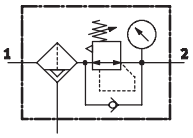

Semi or fully automatic bowl drain

General Technical Data				
Pneumatic connection 1, 2			G⅛	G¼
Filtration grade		[µm]	5 (air purity class at the output 3.7.– to DIN ISO 8573-1)	
			40 (air purity class at the output 5.7.– to DIN ISO 8573-1)	
Supply pressure	M	[bar]	0.8 ... 14 (manual drain)	
	H	[bar]	1.5 ... 12 (semiautomatic drain)	
	V	[bar]	2 ... 12 (fully automatic drain)	
Pressure regulation range	D5	[bar]	0.3 ... 4	
	D6	[bar]	0.3 ... 7	
	D7	[bar]	0.5 ... 12 (0.5 ... 10 with variant pressure sensor AD...)	
Max hysteresis		[bar]	0.25	

Note: This product conforms with the ISO 1179-1 standard and the ISO 228-1 standard.

Standard Nominal Flow Rate qnN[1] [l/min]			
Pneumatic connection 1, 2		G⅛	G¼
D5 – Pressure regulation range 0.3 ... 4 bar			
Filtration grade	5 µm	900[2]	1,800[2]
	40 µm	1,100[2]	1,900[2]
D6 – Pressure regulation range 0.3 ... 7 bar			
Filtration grade	5 µm	900	1,500
	40 µm	1,000	1,700
D7 – Pressure regulation range 0.5 ... 12 bar			
Filtration grade	5 µm	850	1,200
	40 µm	900	1,500

1) Measured at p1 = 10 bar and p2 = 6 bar, Δp = 1 bar
2) Measured at p1 = 10 bar and p2 = 3 bar, Δp = 1 bar

Filter Regulators MS4-LFR – Metric Series

Technical Data

Operating and Environmental Conditions				
Bowl drain		Manual M	Semiautomatic H	Fully automatic V
Operating medium without pressure sensor AD...		Compressed air		
Operating medium with pressure sensor AD...		Filtered compressed air, lubricated or unlubricated, filtration grade 40 µm		
Max. condensate volume	[cm^3]	19 (with plastic bowl guard) 25 (with metal bowl)		
Bowl guard		Plastic bowl guard		
		Metal bowl		
Ambient temperature without pressure sensor AD...	[°C]	–10 ... +60	+5 ... +60	+5 ... +60
Ambient temperature with pressure sensor AD...	[°C]	0 ... +50	+5 ... +50	+5 ... +50
Medium temperature without pressure sensor AD...	[°C]	–10 ... +60	+5 ... +60	+5 ... +60
Medium temperature with pressure sensor AD...	[°C]	0 ... +50	+5 ... +50	+5 ... +50
Storage temperature	[°C]	–10 ... +60	–10 ... +60	–10 ... +60
Assembly position		Vertical ±5°		
Corrosion resistance	CRC[1)]	2		

1) Corrosion resistance class 2 according to Festo standard 940 070
Components requiring moderate corrosion resistance. Externally visible parts with primarily decorative surface requirements which are in direct contact with a normal industrial environment or media such as coolants or lubricating agents.

Weights [g]	
With plastic bowl guard	275
With metal bowl	475

- Wearing parts kits ➔ 118
- Filter cartridges ➔ 118
- For spare parts go to: www.festo.com/en/spare_parts_service

Standard Flow Rate qn as a Function of Output Pressure p2

Pressure regulation range D6 or D7	Filtration grade 5 µm	Filtration grade 40 µm
MS4-LFR-⅛		
Primary pressure p1 = 10 bar	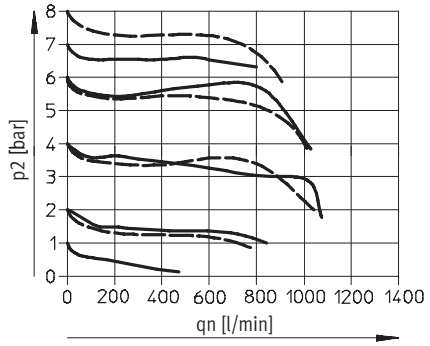	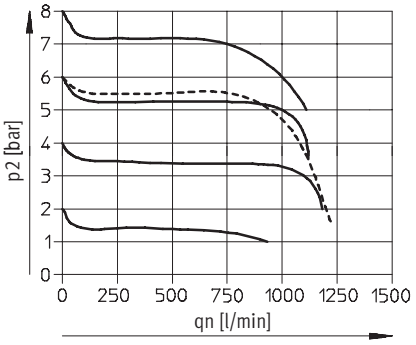
MS4-LFR-¼		
Primary pressure p1 = 10 bar	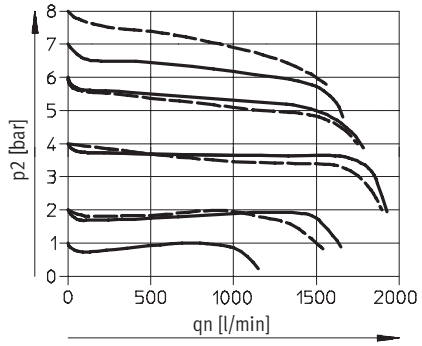	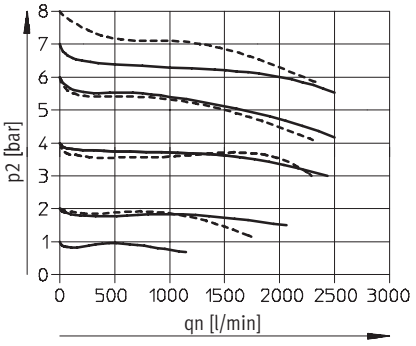

——— D6: 0.3 ... 7 bar
- - - - - - - D7: 0.5 ... 12 bar

Materials

Sectional view

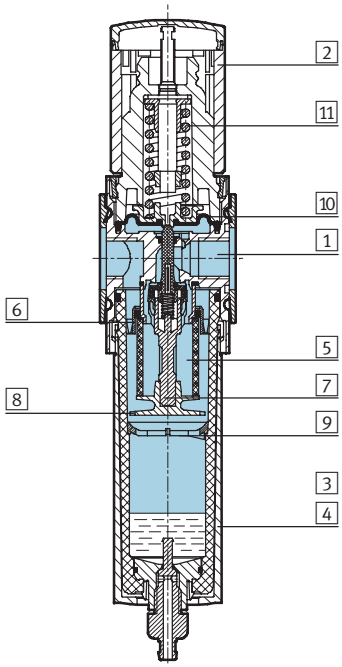

Filter regulator		
1	Body	Die-cast aluminum
2	Regulating knob	Polyamide/polyacetate
3	Plastic bowl guard	Polycarbonate/polyamide
4	Metal bowl	Aluminum
	Viewing window	Polyamide
5	Filter element	Polyethylene
6	Spin disk	Polyacetate
7	Filter holder	Polyacetate
8	Separating plate	Polyacetate
9	Stabilizing disk	Polyacetate
10	Diaphragm	Nitrile rubber
11	Spring	Steel
–	Seals	Nitrile rubber
	Note on materials	Free of copper and PTFE only with cover plate VS

Filter Regulators MS4-LFR – Metric Series

Dimensional Drawings

Dimensions[1] – Standard Download CAD Data ➔ **www.festo.com/us/cad**

With pressure gauge, display unit [bar], rotary knob as standard, manual bowl drain

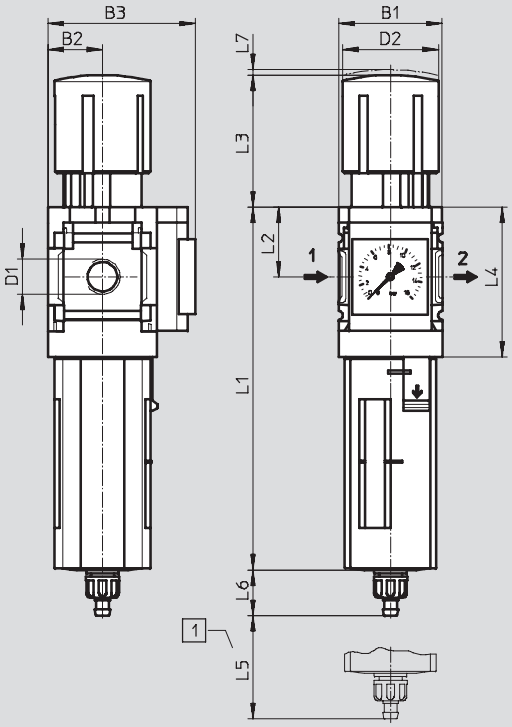

1 Installation dimensions

➔ Flow direction

Type	B1	B2	B3	D1	D2	L1 Bowl guard		L2	L3	L4	L5	L6 Bowl guard		L7
						Plastic	Metal					Plastic	Metal	
MS4-LFR-1/8	40	21	57	G1/8	37.2	140.6	158.2	27	51.1	58.5	25	17.7	17.7	2
MS4-LFR-1/4				G1/4										

1) Dimensions are in millimeters, unless otherwise noted.

Note: This product conforms with the ISO 1179-1 standard and the ISO 228-1 standard.

Filter Regulators MS4-LFR – Metric Series

Dimensional Drawings

Dimensions[1] – Pressure Gauge Alternatives Download CAD Data ➔ **www.festo.com/us/cad**

Cover plate VS

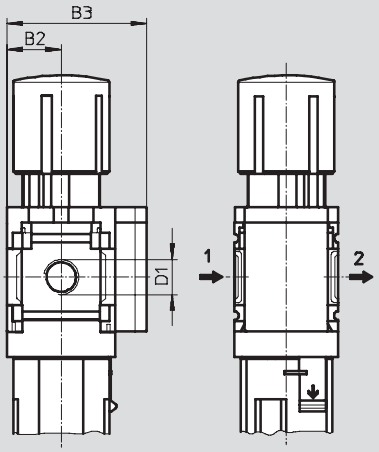

➔ Flow direction

Adapter plate A8/A4 for EN pressure gauge 1/8/1/4, without pressure gauge

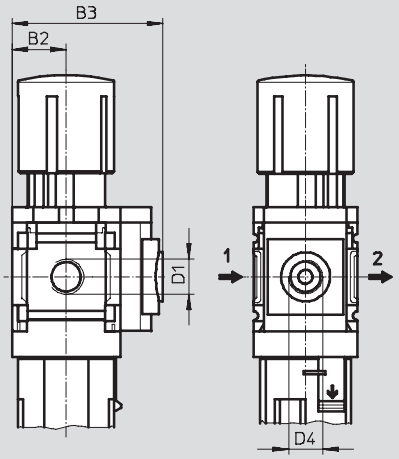

➔ Flow direction

Pressure sensor with display AD1 ... AD4

Technical data SDE1 ➔ www.festo.com/catalog/sde1

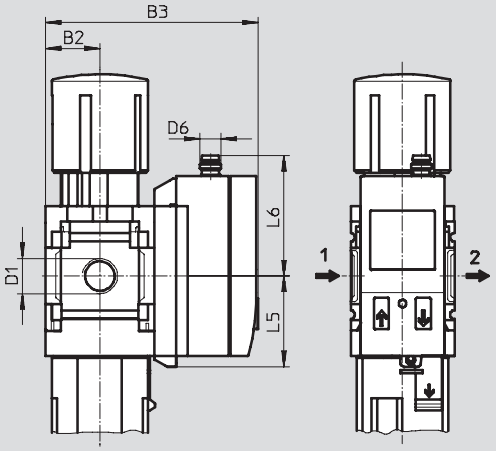

➔ Flow direction

AD1 variants:
SDE1-D10-G2-MS-L-P1-M8 with 3-pin plug M8x1, 1 switching output PNP

AD2 variants:
SDE1-D10-G2-MS-L-N1-M8 with 3-pin plug M8x1, 1 switching output NPN

AD3 variants:
SDE1-D10-G2-MS-L-PI-M12 with 4-pin plug M12x1, 1 switching output PNP and 4 ... 20 mA analog

AD4 variants:
SDE1-D10-G2-MS-L-NI-M12 with 4-pin plug M12x1, 1 switching output NPN and 4 ... 20 mA analog

Type	B2	B3	D1	D4	D6	L5	L6
MS4-LFR-1/8-...-VS	21	54	G1/8	–	–	–	–
MS4-LFR-1/4-...-VS			G1/4				
MS4-LFR-1/8-...-A8	21	58.5	G1/8	G1/8	–	–	–
MS4-LFR-1/4-...-A8			G1/4				
MS4-LFR-1/8-...-A4	21	58.5	G1/8	G1/4	–	–	–
MS4-LFR-1/4-...-A4			G1/4				
MS4-LFR-1/8-...-AD1/AD2	21	82.6	G1/8	–	M8x1	35.1	46.7
MS4-LFR-1/4-...-AD1/AD2			G1/4				
MS4-LFR-1/8-...-AD3/AD4	21	82.6	G1/8	–	M12x1	35.1	55.8
MS4-LFR-1/4-...-AD3/AD4			G1/4				

1) Dimensions are in millimeters, unless otherwise noted.

Note: This product conforms with the ISO 1179-1 standard and the ISO 228-1 standard.

Filter Regulators MS4-LFR – Metric Series

Dimensional Drawings

FESTO

Dimensions[1] – Rotary Knob Download CAD Data ➔ **www.festo.com/us/cad**

For installation into control panel

Standard

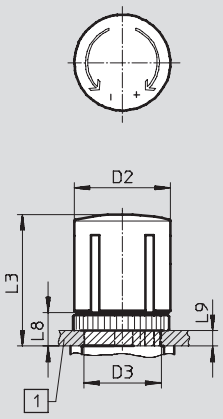

Standard, lockable AS

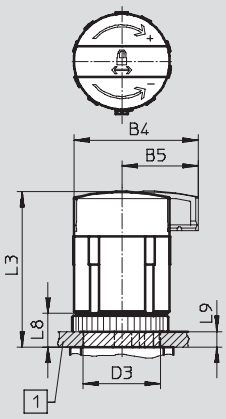

1 Max. control panel thickness

Long LD

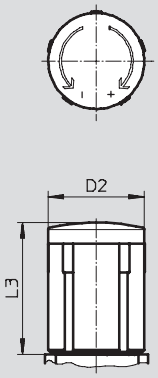

Long, lockable LD-AS

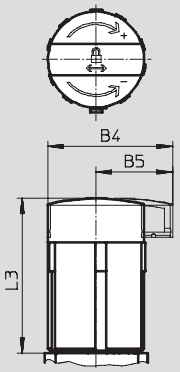

Type	B4	B5	D2	D3 +1	L3	L8	L9
MS4-LFR-...	–	–	37.2	30	51.1	13	6
MS4-LFR-...-AS	48.3	29.7			60.2		
MS4-LFR-...-LD	–	–	37.2	–	51.1	–	–
MS4-LFR-...-LD-AS	48.3	29.7			60.2		

1) Dimensions are in millimeters, unless otherwise noted.

Dimensions[1] – Bowl Drain Download CAD Data ➔ **www.festo.com/us/cad**

Manual M

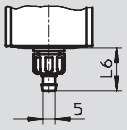

Barbed fitting for plastic tubing
PCN-4

Type	L6
Plastic bowl guard	
MS4-LFR-...-M	17.7
Metal bowl	
MS4-LFR-...-M	17.7

Semiautomatic H

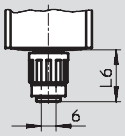

QS fitting for plastic tubing
PUN-6/PAN-6

Type	L6
Plastic bowl guard	
MS4-LFR-...-H	22.1
Metal bowl	
MS4-LFR-...-H	22.1

Fully automatic V

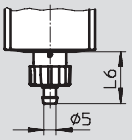

Barbed fitting for plastic tubing
PCN-4

Type	L6
Plastic bowl guard	
MS4-LFR-...-V	20.4
Metal bowl	
MS4-LFR-...-V	20.4

1) Dimensions are in millimeters, unless otherwise noted.

Filter Regulators MS4-LFR – Metric Series

Ordering Data – Pre-configured Products

FESTO

Ordering Data								
Pressure regulation range 0.3 ... 7 bar								
Bowl drain	Connection	Filtration grade 5 µm				Filtration grade 40 µm		
		Part No.	Type	LT		Part No.	Type	LT
Plastic bowl guard								
Manual	G1/8	**529160**	**MS4-LFR-1/8-D6-CRM-AS**	1D		**529164**	**MS4-LFR-1/8-D6-ERM-AS**	1D
	G1/4	**529144**	**MS4-LFR-1/4-D6-CRM-AS**	1D		**529148**	**MS4-LFR-1/4-D6-ERM-AS**	1D
Fully automatic	G1/8	**529162**	**MS4-LFR-1/8-D6-CRV-AS**	1D		**529166**	**MS4-LFR-1/8-D6-ERV-AS**	1D
	G1/4	**529146**	**MS4-LFR-1/4-D6-CRV-AS**	1D		**529150**	**MS4-LFR-1/4-D6-ERV-AS**	1D

Ordering Data								
Pressure regulation range 0.5 ... 12 bar								
Bowl drain	Connection	Filtration grade 5 µm				Filtration grade 40 µm		
		Part No.	Type	LT		Part No.	Type	LT
Plastic bowl guard								
Manual	G1/8	**529168**	**MS4-LFR-1/8-D7-CRM-AS**	1D		**529172**	**MS4-LFR-1/8-D7-ERM-AS**	1D
	G1/4	**529152**	**MS4-LFR-1/4-D7-CRM-AS**	1D		**529156**	**MS4-LFR-1/4-D7-ERM-AS**	1D
Fully automatic	G1/8	**529170**	**MS4-LFR-1/8-D7-CRV-AS**	1D		**529174**	**MS4-LFR-1/8-D7-ERV-AS**	1D
	G1/4	**529154**	**MS4-LFR-1/4-D7-CRV-AS**	1D		**529158**	**MS4-LFR-1/4-D7-ERV-AS**	1D
Metal bowl								
Manual	G1/8	**535702**	**MS4-LFR-1/8-D7-CUM-AS**	Q		**535708**	**MS4-LFR-1/8-D7-EUM-AS**	Q
	G1/4	**535718**	**MS4-LFR-1/4-D7-CUM-AS**	Q		**535724**	**MS4-LFR-1/4-D7-EUM-AS**	Q
Fully automatic	G1/8	**535704**	**MS4-LFR-1/8-D7-CUV-AS**	Q		**535706**	**MS4-LFR-1/8-D7-EUV-AS**	Q
	G1/4	**535720**	**MS4-LFR-1/4-D7-CUV-AS**	Q		**535722**	**MS4-LFR-1/4-D7-EUV-AS**	Q

LT = Lead time **1D** typically ships same day/next day **1W** typically ships within 1 week **Q** request a quote for lead time

Filter Regulators MS4-LFR – Metric Series

Ordering Data – Configurable Products

FESTO

M Mandatory Data ➔

Part No.	Series	Size	Function	Connection size	Pressure regulation range	Filtration grade	Bowl
526489	MS	4	LFR	⅛, ¼, AGA, AGB, AGC	D5 D6 D7	E C	R U

Order example

526489	**MS**	**4**	–	**LFR**	–	**AGA**	–	**D6**	–	**C**	–	**R**

Ordering Table

Grid dimension [mm]	40	Conditions	Code		Enter code
M Part No.	**526489**				
Series	Standard		**MS**		MS
Size	4		**4**		4
Function	Filter regulator		**-LFR**		-LFR
Connection size	Body thread G⅛		**-⅛**		
	Body thread G¼		**-¼**		
	Port plate G⅛ (dimensions ➔ 113)		**-AGA**		
	Port plate G¼ (dimensions ➔ 113)		**-AGB**		
	Port plate G⅜ (dimensions ➔ 113)		**-AGC**		
Pressure regulation range	0.3 ... 4 bar		**-D5**		
	0.3 ... 7 bar		**-D6**		
	0.5 ... 12 bar		**-D7**		
Filtration grade	40 µm		**-E**		
	5 µm		**-C**		
Bowl	Plastic bowl with plastic bowl guard		**-R**		
↓	Metal bowl		**-U**		

Transfer order code

526489	**MS**	**4**	–	**LFR**	–		–		–		–	

➔ M	O Options							
Bowl drain	**Pressure gauge alternatives**	**Alternative pressure gauge scale**	**Secondary venting**	**Rotary knob**	**Security**	**Type of mounting**	**Reverse flow direction**
M H V	VS A8 A4 AD1 AD2 AD3 AD4	PSI MPA	OS	LD	AS	WR WP WPM WB WBM	Z
– **M**	– **A8**	–	–	– **LD**	– **AS**	– **WPM**	– **Z**

Ordering Table

Grid dimension [mm]		40	Conditions	Code	Enter code
↓ M	Bowl drain	Manual		**-M**	
		Semiautomatic (P1 max. 12 bar)		**-H**	
		Fully automatic (P1 max. 12 bar)		**-V**	
O	Pressure gauge alternatives	Cover plate		**-VS**	
		Adapter plate for EN pressure gauge ⅛, without pressure gauge		**-A8**	
		Adapter plate for EN pressure gauge ¼, without pressure gauge		**-A4**	
		Pressure sensor with display, M8 plug, 1 switching output PNP, 3-pin	1	**-AD1**	
		Pressure sensor with display, M8 plug, 1 switching output NPN, 3-pin	1	**-AD2**	
		Pressure sensor with display, M12 plug, 1 switching output PNP, 4-pin, analog output 4 ... 20 mA	1	**-AD3**	
		Pressure sensor with display, M12 plug, 1 switching output NPN, 4-pin, analog output 4 ... 20 mA	1	**-AD4**	
	Alternative pressure gauge scale	psi	2	**-PSI**	
		MPa	2	**-MPA**	
	Secondary venting	Without secondary venting		**-OS**	
	Rotary knob	Long rotary knob		**-LD**	
	Security	Lockable rotary knob		**-AS**	
	Type of mounting	Mounting bracket with knurled nut for regulator head (dimensions ➔ 111)	3	**-WR**	
		Mounting bracket (dimensions ➔ 114)	4	**-WP**	
		Mounting bracket (dimensions ➔ 114)	4	**-WPM**	
		Mounting bracket (dimensions ➔ 110)		**-WB**	
		Mounting bracket (dimensions ➔ 110)		**-WBM**	
	Reverse flow direction	Flow direction from right to left		**-Z**	

1 **AD1 ... AD4** Measuring range max. 10 bar

2 **PSI, MPA** Not with pressure gauge alternatives VS, A8, A4, AD1, AD2, AD3, AD4

3 **WR** Not with long rotary knob LD

4 **WP, WPM** Only with port plate AGA, AGB or AGC

Transfer order code

–		–		–		–		–		–		–		–	

Mounting Attachments and Accessories

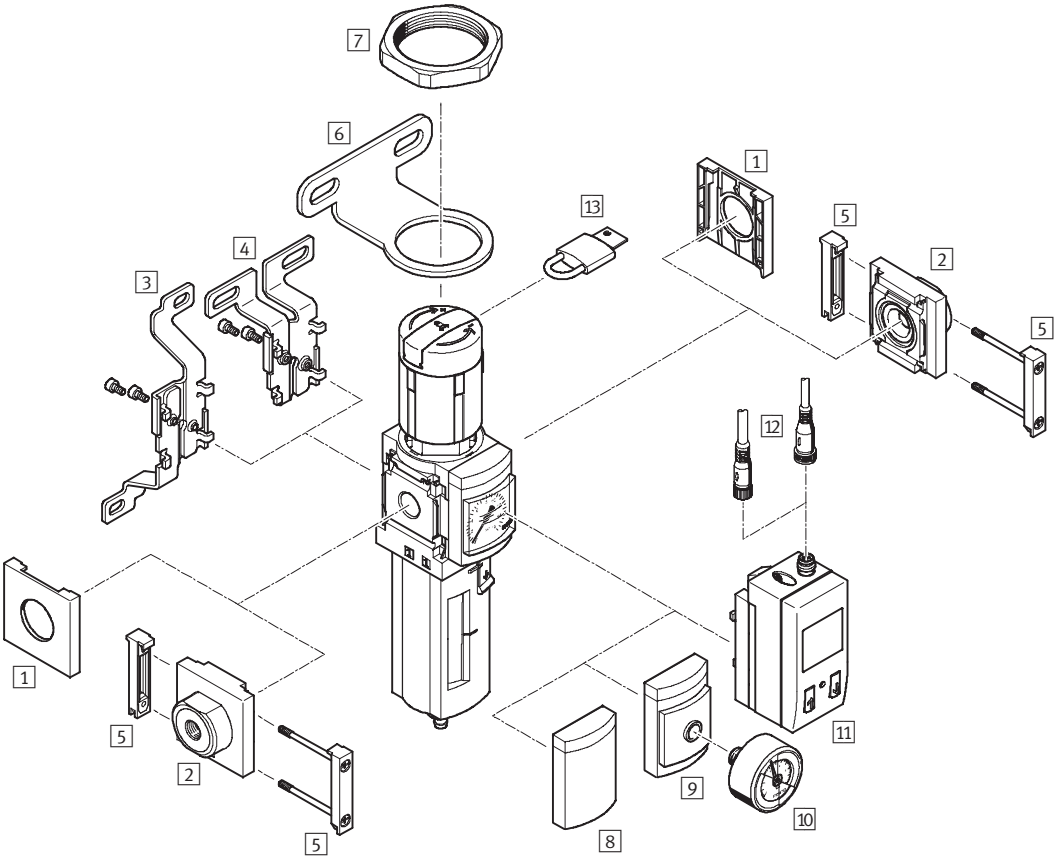

Single unit and combination unit mounting brackets.

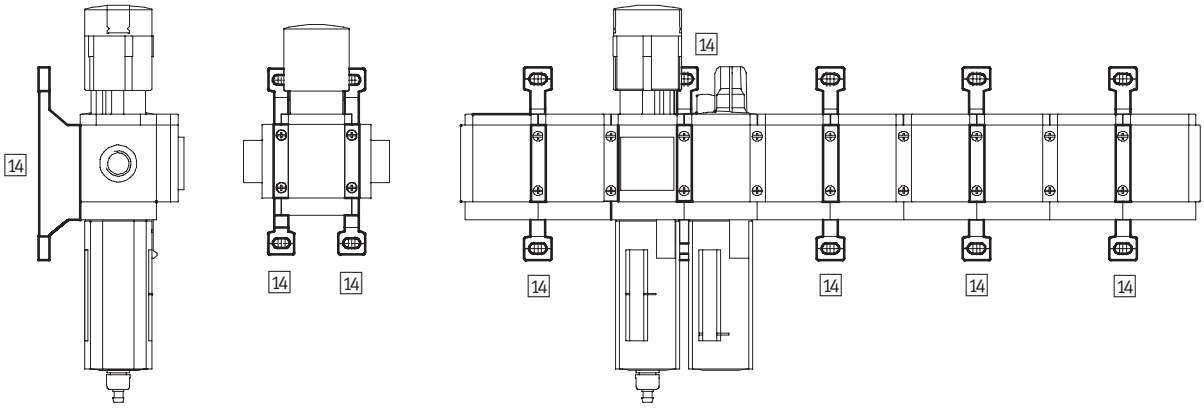

Filter Regulators MS4-LFR – Metric Series

Accessories Overview

Mounting Attachments and Accessories						
		Single unit		Combination unit		➔ Page
		without port plate	with port plate	without port plate	with port plate	
1	Cover cap MS4-END	■	–	■	–	112
2	Port plate MS4-AG...	–	■	–	■	113
3	Mounting bracket MS4-WB	■	■	–	–	110
4	Mounting bracket MS4-WBM	■	■	–	–	110
5	Body connector MS4-MV	–	■	■	■	113
6	Regulator wall bracket MS4-WR	■	■	–	–	111
7	Hex nut MS4-WRS	■	■	■	■	111
8	Cover plate VS	■	■	■	■	106
9	Adapter for EN pressure gauge 1/8/1/4 A8/A4	■	■	■	■	106
10	Pressure gauge MA	■	■	■	■	117
11	Pressure sensor SDE1-...-MS AD1 ... AD4	■	■	■	■	106
12	Plug socket with cable SIM-M8-3.../SIM-M12-4...	■	■	■	■	117
13	Padlock LRVS-D	■	■	■	■	117
14	Mounting bracket MS4-WP/WPB/WPM	–	■	■	■	114

3 Mounting bracket MS4-WB
- For wall mounting

Material:
Steel

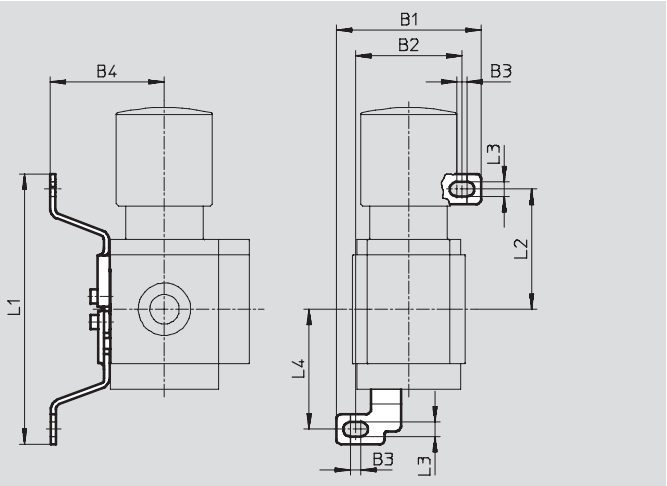

Dimensions and Ordering Data

B1	B2	B3	B4	L1	L2	L3	L4	Weight [g]	Part No.	Type
56.2	41.2	4	44.2	104.6	46.6	5.6	46.5	46	**532185**	**MS4-WB**

4 Mounting bracket MS4-WBM
- For wall mounting

Material:
Steel

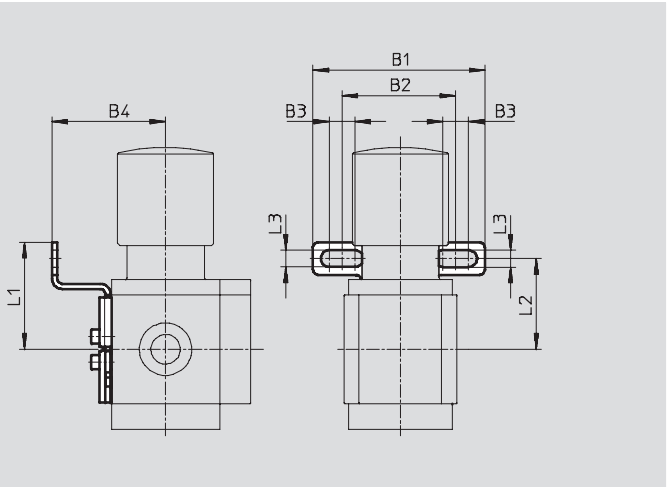

Dimensions and Ordering Data

B1	B2	B3	B4	L1	L2	L3	Weight [g]	Part No.	Type
66.5	44	10	44	41.3	35	6.5	48	**526062**	**MS4-WBM**

6 **Mounting bracket MS4-WR**
- For wall mounting
- For filter regulator, pressure regulator

Material:
Steel

Note
The hex nut for attaching components to this bracket must be ordered separately.

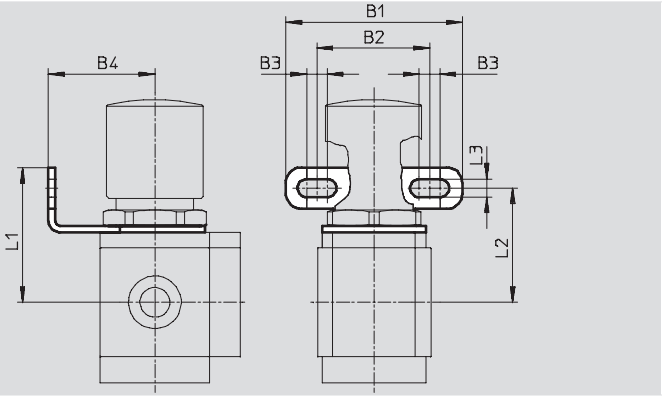

Dimensions and Ordering Data

B1	B2	B3	B4	L1	L2	L3	Weight [g]	Part No.	Type
68	44	8	41	52	44	7	49	**526064**	**MS4-WR**

7 **Hex nut MS4-WRS**
- For front panel mounting
- For attaching components to the mounting bracket MS-WR

Material:
Aluminum

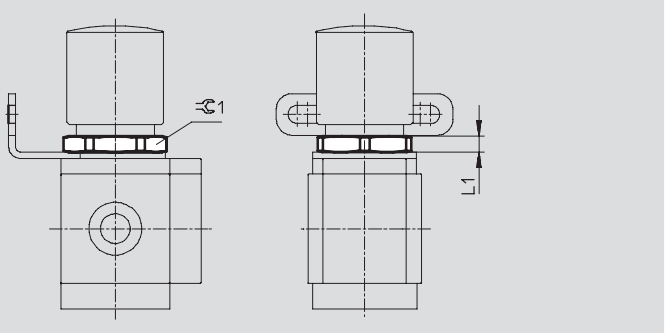

Dimensions and Ordering Data

L1	⌀1	Weight [g]	Part No.	Type
6	36	6.9	**532187**	**MS4-WRS**

1 Cover cap MS4-END

- Can be used to cover the body sides of the first and last module if port plates are not used.

Material:
Reinforced polyamide
Free of copper and PTFE

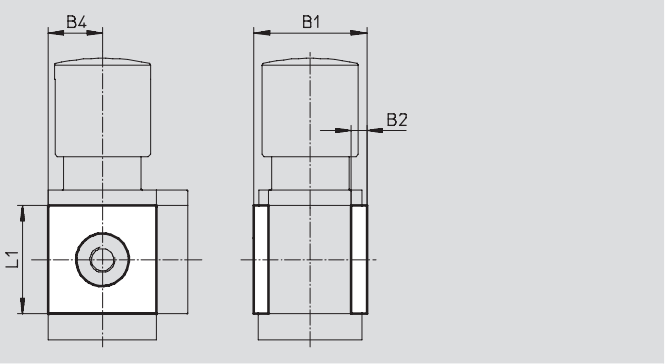

Dimensions and Ordering Data

B1	B2	B4	L1	Part No.	Type
43.6	6	21	42	**538779**	**MS4-END**

Mounting plate MS4-AEND

- In combination with mounting bracket MS-WP or MS-WPB for mounting an individual unit with body thread on a wall

Material:
Reinforced polyamide
Conforms to RoHS
Free of copper and PTFE

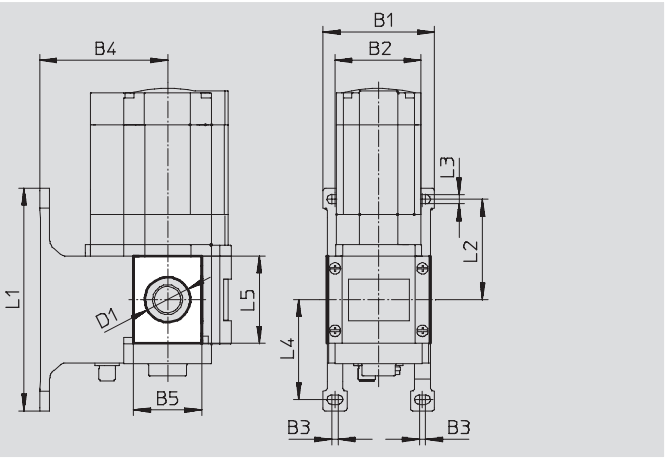

Dimensions and Ordering Data

B1	B2	B3	B4		B5	D1	L1	L2	L3	L4	L5	CRC[1)]	Weight	Part No.	Type
			WP	WPB		∅							[g]		
55.2	40.2	4	44	66	30.4	20.3	106	46.5	5.6	46.7	42	2	4	**542966**	**MS4-AEND**

1) Corrosion resistance class 2 according to Festo standard 940 070
Components requiring moderate corrosion resistance. Externally visible parts with primarily decorative surface requirements which are in direct contact with a normal industrial environment or media such as coolants or lubricating agents.

2 **Port plate MS4-AG...**
- Adapter for pneumatic connection

Material:
Aluminum

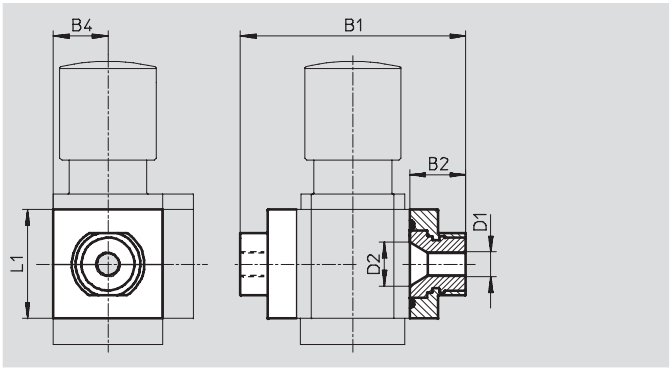

Dimensions and Ordering Data

B1	B2	B4	D1	D2	L1	Weight [g]	Part No.	Type
83.5	21.5	21	G1⁄8	16.8	42	128	**526068**	**MS4-AGA**
			G1⁄4				**526069**	**MS4-AGB**
			G3⁄8				**526070**	**MS4-AGC**

Note: This product conforms with the ISO 1179-1 standard and the ISO 228-1 standard.

5 **Body connector MS4-MV**
- For connecting modules

Material:
Stainless steel/polyacetate

Ordering Data

Weight [g]	Part No.	Type
36	**532798**	**MS4-MV**

14 Mounting Bracket MS4-WP...

Suggested placement of wall mounting brackets when mounting air preparation combinations

1 unit: 40 mm

2 units: 80 mm

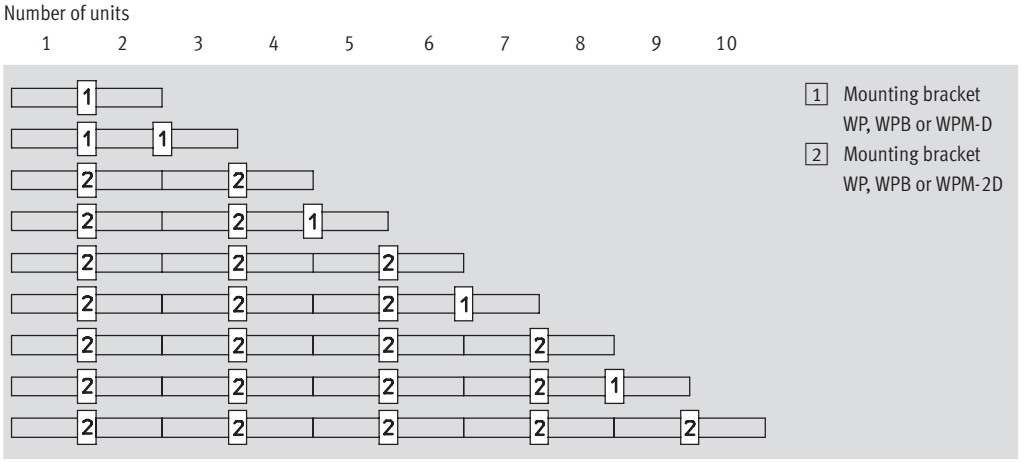

Mounting dimensions

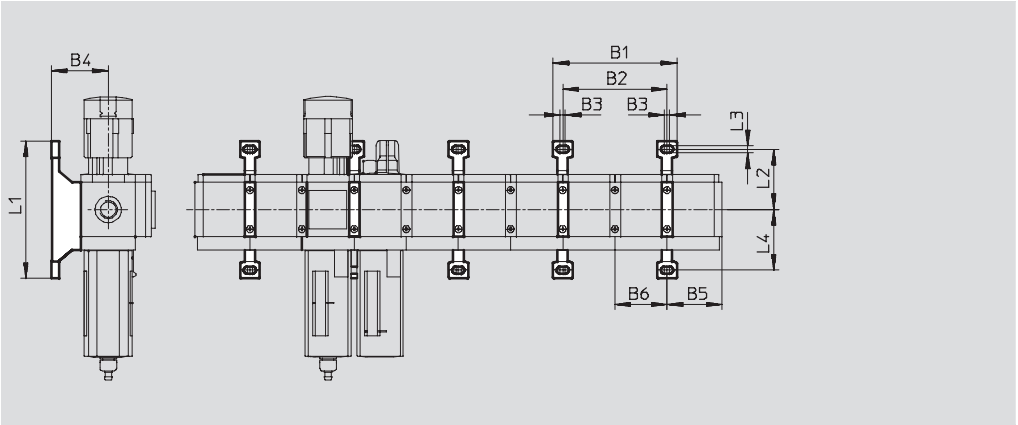

Type	B1	B2	B3	B4	B5	B6	L1	L2	L3	L4
MS4-WP	95.2	80	4	44	41.9	40	106	46.5	5.6	46.7
MS4-WPB				66						
MS4-WPM-...D				44			92.8	34.8		40

Mounting bracket MS4-WP

- To connect the modules for wall mounting
- In combination with a port plate MS-AG... for mounting an individual unit on a wall
- In combination with mounting plate MS-AEND or for mounting an individual unit with body thread on a wall
- For pressure regulator LRB with angled outlet block B... at rear

Material:
Die-cast aluminum

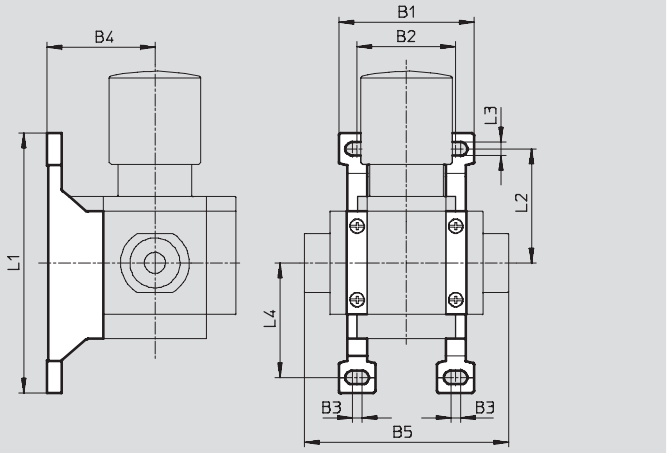

Dimensions and Ordering Data

B1	B2	B3	B4	B5	L1	L2	L3	L4	Weight [g]	Part No.	Type
55.2	40.2	4	44	83.4	106	46.5	5.6	46.7	39	**532184**	**MS4-WP**

Mounting bracket MS4-WPB

- To connect the modules for wall mounting
- In combination with a port plate MS-AG... for mounting an individual unit on a wall
- In combination with mounting plate MS-AEND or for mounting an individual unit with direct thread on a wall
- Provides large wall gap for pressure regulator

Material:
Die-cast aluminum

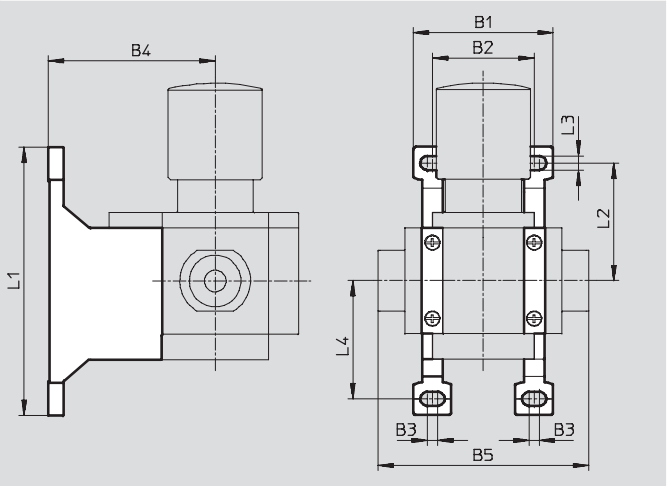

Dimensions and Ordering Data

B1	B2	B3	B4	B5	L1	L2	L3	L4	Weight [g]	Part No.	Type
55.2	40.2	4	66	83.4	106	46.5	5.6	46.7	55	**526063**	**MS4-WPB**

Mounting bracket MS4-WPM

- To connect the modules for wall mounting
- In combination with a port plate MS-AG... for mounting an individual unit on a wall
- Speedy attachment and detachment
- For installation of modules with regulating knob pointing downwards

The distance piece D or 2D (designated in the type code) is included in the scope of delivery and ensures the correct clearance

Material:
Die-cast aluminum

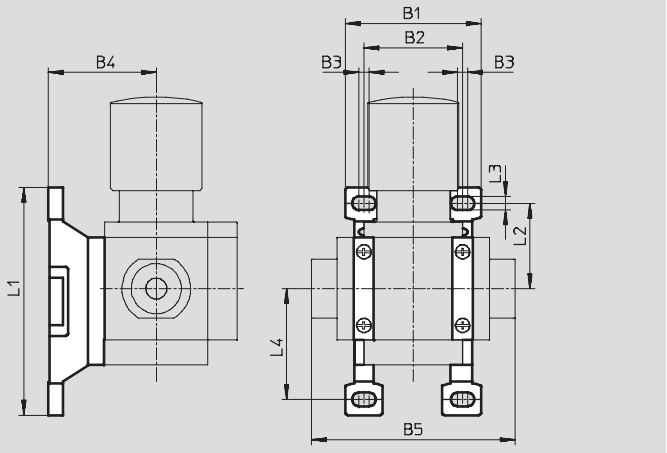

Dimensions and Ordering Data

B1	B2	B3	B4	B5	L1	L2	L3	L4	Clearance	Weight [g]	Part No.	Type
55.2	40	4	44	83.4	92.8	34.8	5.6	45.2	40	45	**526060**	**MS4-WPM-D**
95.2	80			123.4					80	55	**526061**	**MS4-WPM-2D**

Body connector MS4-MVM

- For installation of modules with regulating knob pointing downwards

Material:
Die-cast aluminum

Ordering Data

Size	Part No.	Type
MS4	**532800**	**MS4-MVM**

11 Ordering Data – Plug Socket with Cable SIM-M8 — Technical data ➔ www.festo.com/catalog/sim-m8

	Electrical connection	Cable length [m]	Part No.	Type
	M8x1, 3-pin	2.5	**159420**	**SIM-M8-3GD-2,5-PU**
		5	**159421**	**SIM-M8-3GD-5-PU**
		10	**192964**	**SIM-M8-3GD-10-PU**
	M8x1, 3-pin	2.5	**159422**	**SIM-M8-3WD-2,5-PU**
		5	**159423**	**SIM-M8-3WD-5-PU**
		10	**192965**	**SIM-M8-3WD-10-PU**

11 Ordering Data – Plug Socket with Cable SIM-M12 — Technical data ➔ www.festo.com/catalog/sim-m12

	Electrical connection	Cable length [m]	Part No.	Type
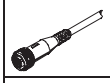	M12x1, 4-pin	5	**164259**	**SIM-M12-4GD-5-PU**
	M12x1, 4-pin	5	**164258**	**SIM-M12-4WD-5-PU**

10 Ordering Data – Pressure Gauge MA — Technical data ➔ www.festo.com/catalog/ma

	Nominal size	Pneumatic connection	Indicating range [bar]	Indicating range [psi]	Part No.	Type
	Pressure gauge MA, DIN EN 837-1					
	40	G¼	0 ... 16	0 ... 232	**183901**	**MA-40-16-G¼-EN**
	Pressure gauge MA, DIN EN 837-1, with red-green range					
	40	R⅛	0 ... 16	–	**525726**	**MA-40-16-R⅛-E-RG**
	50	R¼	0 ... 16	–	**525729**	**MA-50-16-R¼-E-RG**

13 Ordering Data – Padlock LRVS-D

	Description	Weight [g]	Part No.	Type
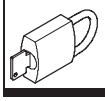	for regulators, filter/regulators and manual on-off valves	120	**193786**	**LRVS-D**

Filter Regulators MS4-LFR – Metric Series

Replacement Parts

Ordering Data – Wearing Parts Kits			
Size	Description	Part No.	Type
MS4	Snap-ring, membrane, bellows, O-rings, screws, stem	**673647**	**MS4-LFR**

Ordering Data – Filter Cartridges			
Size	Filtration grade [µm]	Part No.	Type
MS4	5	**534501**	**MS4-LFP-C**
	40	**534502**	**MS4-LFP-E**

- For spare parts go to: www.festo.com/en/spare_parts_service

Filter Regulators MS4N-LFR – Inch Series

A filter regulator combines a filter and a pressure regulator into a single unit. The sintered filter with water separator removes contamination, pipe sinter, rust and condensate from the compressed air. The pressure setting can be adjusted with the regulator.

- Pneumatic connection: ⅛ NPT, ¼ NPT, ⅜ NPT
- Filtration grade: 5 µm, 40 µm
- Supply pressure
  – for manual drain: 12 … 206 psi
  – for semiautomatic drain: 22 … 176 psi
  – for fully automatic drain: 29 … 176 psi
- Controlled pressure range: 4.4 … 176 psi
- Flow rate: 30.0 … 67.1 scfm

Product Range Overview

Type	Pneumatic connections		Pressure regulation range [psi]			Filtration grade [µm]		Bowl guard		Bowl drain			Pressure indicator					Pressure adjustment		Reverse flow
	Body thread	Port plate	4.4... 59	4.4 ... 103	7.4 ... 176	5	40	Plastic bowl guard	Metal bowl	Manual	Semiautomatic	Fully automatic	Cover plate (without pressure gauge)	Integrated MS pressure gauge	Adapter for pressure gauge ⅛ NPT	Adapter for pressure gauge ¼ NPT	Pressure sensor with display	Rotary knob, lockable	Rotary knob, long	Flow direction from right to left
MS4N		AG...	D5	D6	D7	C	E	R	U	M	H	V	VS	AG	A8	A4	AD...	AS	LD	Z
LFR	⅛ NPT, ¼ NPT	⅛ NPT, ¼ NPT, ⅜ NPT	■	■	■	■	■	■	■	■	■	■	■	■	■	■	■	■	■	■

Features

- Good control characteristics with low hysteresis and primary pressure compensation
- High flow rates
- Directly actuated diaphragm regulator
- Three pressure regulation ranges
- Modular, in-line or panel mounting
- Lockable rotary knob
- Available with or without secondary venting
- Two pressure gauge connections for different fitting options
- Reverse flow option for exhausting from output 2 to output 1
- Optional pressure sensor with display and electric output

Contents

Technical Data → 120
Dimensional Drawings → 124
Ordering Data → 127
Accessories → 130
Replacement Parts → 140

→ www.festo.com/catalog/ms4n-lfr

Filter Regulators MS4N-LFR – Inch Series

Technical Data

ISO Symbol

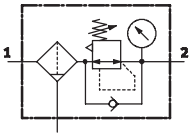

Manual bowl drain

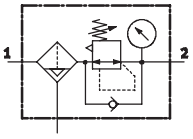

Semi or fully automatic bowl drain

General Technical Data				
Pneumatic connection 1, 2			1/8 NPT	1/4 NPT
Filtration grade		[µm]	5 (air purity class at the output 3.7.– to DIN ISO 8573-1)	
			40 (air purity class at the output 5.7.– to DIN ISO 8573-1)	
Supply pressure	M	[psi]	12 ... 206 (manual drain)	
	H	[psi]	22 ... 176 (semiautomatic drain)	
	V	[psi]	29 ... 176 (fully automatic drain)	
Pressure regulation range	D5	[psi]	4.4 ... 59	
	D6	[psi]	4.4 ... 103	
	D7	[psi]	7.4 ... 176 (4.4 ... 147 with variant pressure sensor AD...)	
Max. hysteresis		[psi]	3.7	

Standard Nominal Flow Rate qnN[1] [scfm]			
Pneumatic connection 1, 2		1/8 NPT	1/4 NPT
D5 – Pressure regulation range 4.4 ... 59 psi			
Filtration grade	5 µm	31.8[2]	63.5[2]
	40 µm	38.8[2]	67.1[2]
D6 – Pressure regulation range 4.4 ... 103 psi			
Filtration grade	5 µm	31.8	53.0
	40 µm	35.3	60.0
D7 – Pressure regulation range 7.4 ... 176 psi			
Filtration grade	5 µm	30.0	42.4
	40 µm	31.8	53.0

1) Measured at p1 = 147 psi and p2 = 88 psi, Δp = 15 psi
2) Measured at p1 = 147 psi and p2 = 44 psi, Δp = 15 psi

Filter Regulators MS4N-LFR – Inch Series

Technical Data

Operating and Environmental Conditions				
Bowl drain		Manual M	Semiautomatic H	Fully automatic V
Operating medium without pressure sensor AD...		Compressed air		
Operating medium with pressure sensor AD...		Filtered compressed air, lubricated or unlubricated, filtration grade 40 µm		
Max. condensate volume	[in^3]	1.16 (with plastic bowl guard) 1.53 (with metal bowl)		
Bowl guard		Plastic bowl guard		
		Metal bowl		
Ambient temperature without pressure sensor AD...	[°F]	14 ... 140	41 ... 140	41 ... 140
Ambient temperature with pressure sensor AD...	[°F]	32 ... 122	41 ... 122	41 ... 122
Medium temperature without pressure sensor AD...	[°F]	14 ... 140	41 ... 140	41 ... 140
Medium temperature with pressure sensor AD...	[°F]	32 ... 122	41 ... 122	41 ... 122
Storage temperature	[°F]	14 ... 140	14 ... 140	14 ... 140
Assembly position		Vertical ±5°		
Corrosion resistance	CRC[1)]	2		

1) Corrosion resistance class 2 according to Festo standard 940 070
Components requiring moderate corrosion resistance. Externally visible parts with primarily decorative surface requirements which are in direct contact with a normal industrial environment or media such as coolants or lubricating agents.

Weights [lb]	
With plastic bowl guard	0.55
With metal bowl	0.95

- Wearing parts kits ➔ 140
- Filter cartridges ➔ 140
- For spare parts go to: www.festo.com/en/spare_parts_service

Filter Regulators MS4N-LFR – Inch Series

Technical Data

FESTO

Standard Flow Rate qn as a Function of Output Pressure p2

Pressure regulation range D6 or D7	Filtration grade 5 µm	Filtration grade 40 µm
MS4N-LFR-⅛		

Primary pressure p1 = 147 psi

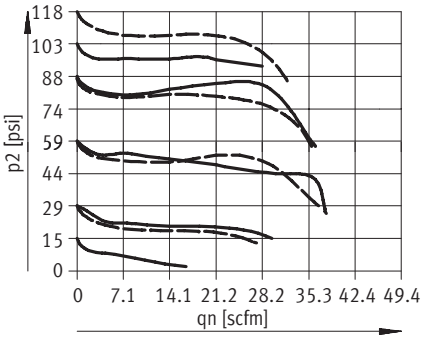

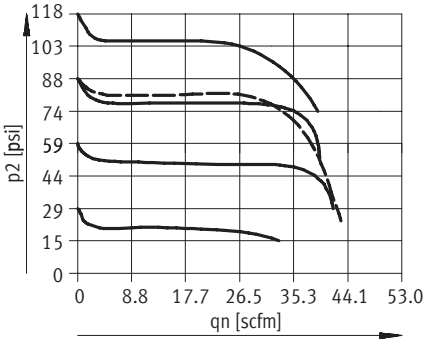

——— D6: 4.4 ... 103 psi

- - - - - - - D7: 7.4 ... 176 psi

MS4N-LFR-¼

Primary pressure p1 = 147 psi

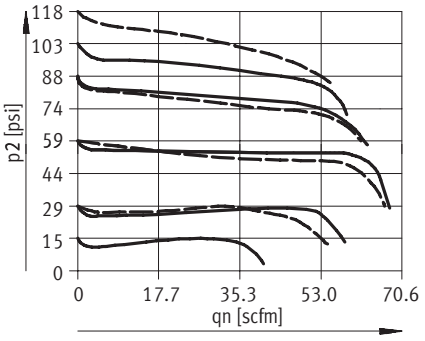

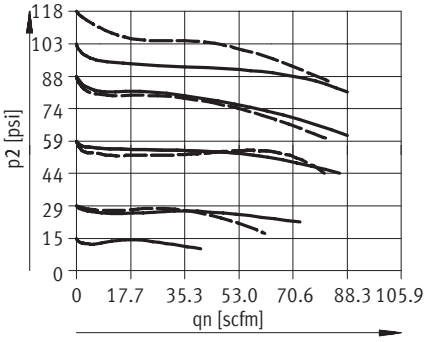

——— D6: 4.4 ... 103 psi

- - - - - - - D7: 7.4 ... 176 psi

Materials

Sectional view

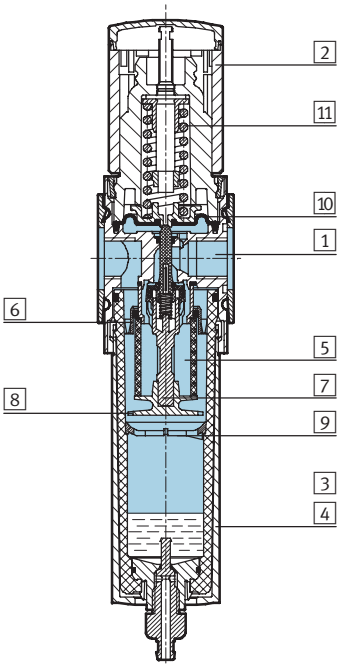

Filter regulator		
1	Body	Die-cast aluminum
2	Regulating knob	Polyamide/polyacetate
3	Plastic bowl guard	Polycarbonate/polyamide
4	Metal bowl Viewing window	Aluminum Polyamide
5	Filter element	Polyethylene
6	Spin disk	Polyacetate
7	Filter holder	Polyacetate
8	Separating plate	Polyacetate
9	Stabilizing disk	Polyacetate
10	Diaphragm	Nitrile rubber
11	Spring	Steel
–	Seals	Nitrile rubber
	Note on materials	Free of copper and PTFE only with cover plate VS

Filter Regulators MS4N-LFR – Inch Series

Dimensional Drawings

Dimensions[1] – Standard Download CAD Data ➔ **www.festo.com/us/cad**

With pressure gauge, display unit [psi], rotary knob as standard, manual bowl drain

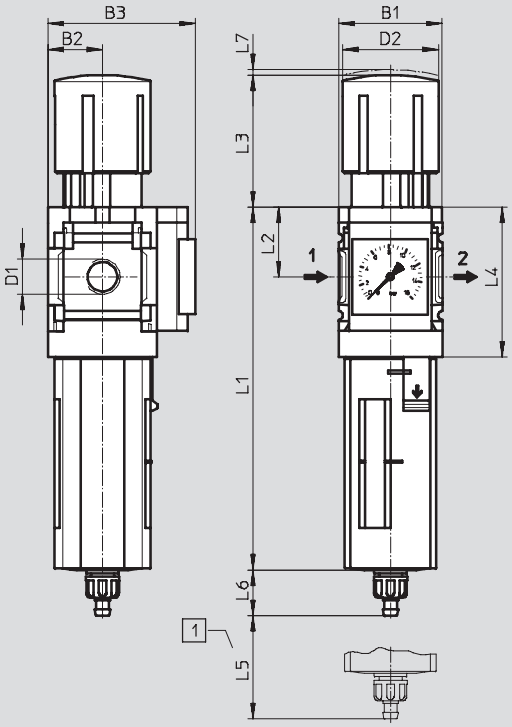

1 Installation dimensions

➔ Flow direction

Type	B1	B2	B3	D1	D2	L1 Bowl guard		L2	L3	L4	L5	L6 Bowl guard		L7
						Plastic	Metal					Plastic	Metal	
MS4N-LFR-⅛	1.57	0.83	2.24	⅛ NPT	1.46	5.54	6.23	1.06	2.01	2.30	0.98	0.70	0.70	0.08
MS4N-LFR-¼				¼ NPT										

1) Dimensions are in inches, unless otherwise noted.

Filter Regulators MS4N-LFR – Inch Series

Dimensional Drawings

Dimensions[1] – Pressure Gauge Alternatives

Download CAD Data ➔ **www.festo.com/us/cad**

Cover plate VS

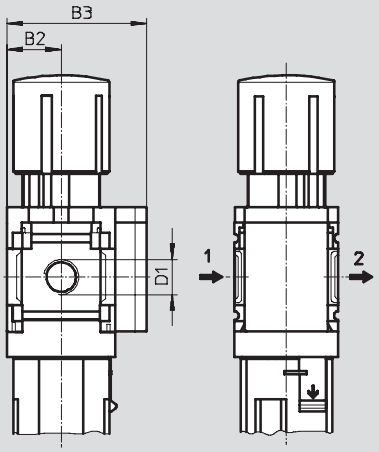

➔ Flow direction

Adapter plate A8/A4 for EN pressure gauge 1/8/1/4, without pressure gauge

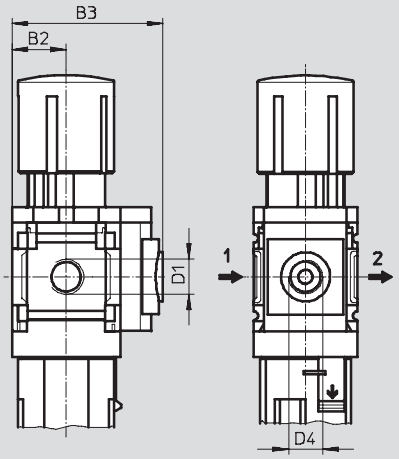

➔ Flow direction

Pressure sensor with display AD1 ... AD4

Technical data SDE1 ➔ www.festo.com/catalog/sde1

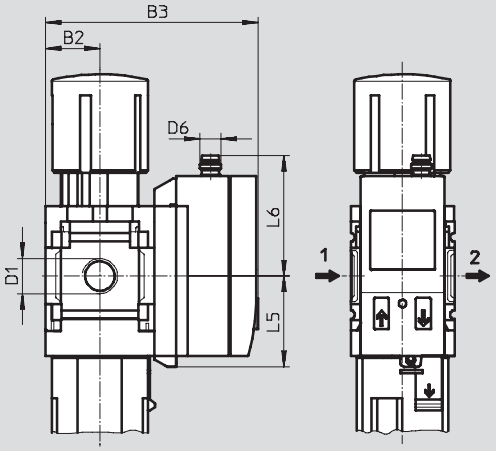

➔ Flow direction

AD1 variants:
SDE1-D10-G2-MS-L-P1-M8 with 3-pin plug M8x1, 1 switching output PNP

AD2 variants:
SDE1-D10-G2-MS-L-N1-M8 with 3-pin plug M8x1, 1 switching output NPN

AD3 variants:
SDE1-D10-G2-MS-L-PI-M12 with 4-pin plug M12x1, 1 switching output PNP and 4 ... 20 mA analog

AD4 variants:
SDE1-D10-G2-MS-L-NI-M12 with 4-pin plug M12x1, 1 switching output NPN and 4 ... 20 mA analog

Type	B2	B3	D1	D4	D6	L5	L6
MS4N-LFR-1/8-...-VS	0.83	2.13	1/8 NPT	–	–	–	–
MS4N-LFR-1/4-...-VS			1/4 NPT				
MS4N-LFR-1/8-...-A8	0.83	2.30	1/8 NPT	1/8 NPT	–	–	–
MS4N-LFR-1/4-...-A8			1/4 NPT				
MS4N-LFR-1/8-...-A4	0.83	2.30	1/8 NPT	1/4 NPT	–	–	–
MS4N-LFR-1/4-...-A4			1/4 NPT				
MS4N-LFR-1/8-...-AD1/AD2	0.83	3.25	1/8 NPT	–	M8x1	1.38	1.84
MS4N-LFR-1/4-...-AD1/AD2			1/4 NPT				
MS4N-LFR-1/8-...-AD3/AD4	0.83	3.25	1/8 NPT	–	M12x1	1.38	2.20
MS4N-LFR-1/4-...-AD3/AD4			1/4 NPT				

1) Dimensions are in inches, unless otherwise noted.

Filter Regulators MS4N-LFR – Inch Series

Dimensional Drawings

Dimensions[1] – Rotary Knob Download CAD Data ➔ **www.festo.com/us/cad**

For installation into control panel

Standard

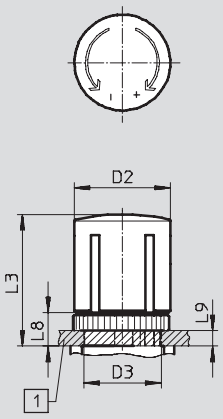

Standard, lockable AS

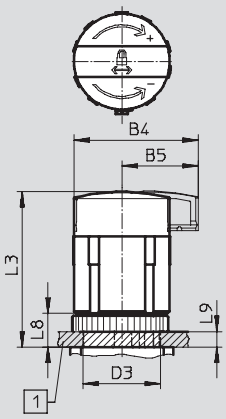

1 Max. control panel thickness

Long LD

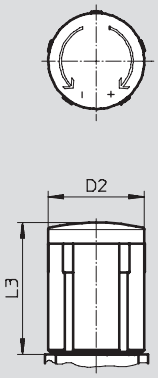

Long, lockable LD-AS

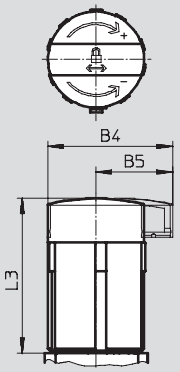

Type	B4	B5	D2	D3 +0.04	L3	L8	L9
MS4N-LFR-...	–	–	1.46	1.18	2.01	0.51	0.24
MS4N-LFR-...-AS	1.90	1.17			2.37		
MS4N-LFR-...-LD	–	–	1.46	–	2.01	–	–
MS4N-LFR-...-LD-AS	1.90	1.17			2.37		

1) Dimensions are in inches, unless otherwise noted.

Dimensions[1] – Bowl Drain Download CAD Data ➔ **www.festo.com/us/cad**

Manual M

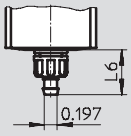

Barbed fitting for plastic tubing
PCN-4

Type	L6
Plastic bowl guard	
MS4N-LFR-...-M	0.70
Metal bowl	
MS4N-LFR-...-M	0.70

Semiautomatic H

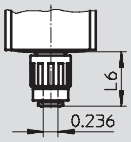

QS fitting for plastic tubing
PUN-6/PAN-6

Type	L6
Plastic bowl guard	
MS4N-LFR-...-H	0.87
Metal bowl	
MS4N-LFR-...-H	0.87

Fully automatic V

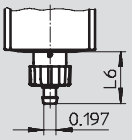

Barbed fitting for plastic tubing
PCN-4

Type	L6
Plastic bowl guard	
MS4N-LFR-...-V	0.80
Metal bowl	
MS4N-LFR-...-V	0.80

1) Dimensions are in inches, unless otherwise noted.

Filter Regulators MS4N-LFR – Inch Series

Ordering Data – Pre-configured Products

FESTO

Ordering Data									
Pressure regulation range 4.4 ... 103 psi									
Bowl drain	Connection	Filtration grade 5 µm				Filtration grade 40 µm			
		Part No.	Type	LT		Part No.	Type	LT	
Plastic bowl guard									
Manual	1/8 NPT	**531230**	**MS4N-LFR-1/8-D6-CRM-AS**	1D		**531222**	**MS4N-LFR-1/8-D6-ERM-AS**	1D	
	1/4 NPT	**531229**	**MS4N-LFR-1/4-D6-CRM-AS**	1D		**531221**	**MS4N-LFR-1/4-D6-ERM-AS**	1D	
Fully automatic	1/8 NPT	**531234**	**MS4N-LFR-1/8-D6-CRV-AS**	1D		**531226**	**MS4N-LFR-1/8-D6-ERV-AS**	1D	
	1/4 NPT	**531233**	**MS4N-LFR-1/4-D6-CRV-AS**	1D		**531225**	**MS4N-LFR-1/4-D6-ERV-AS**	1D	

Ordering Data									
Pressure regulation range 7.4 ... 176 psi									
Bowl drain	Connection	Filtration grade 5 µm				Filtration grade 40 µm			
		Part No.	Type	LT		Part No.	Type	LT	
Plastic bowl guard									
Manual	1/8 NPT	**531214**	**MS4N-LFR-1/8-D7-CRM-AS**	1D		**531206**	**MS4N-LFR-1/8-D7-ERM-AS**	1D	
	1/4 NPT	**531213**	**MS4N-LFR-1/4-D7-CRM-AS**	1D		**531205**	**MS4N-LFR-1/4-D7-ERM-AS**	1D	
Fully automatic	1/8 NPT	**531218**	**MS4N-LFR-1/8-D7-CRV-AS**	1D		**531210**	**MS4N-LFR-1/8-D7-ERV-AS**	1D	
	1/4 NPT	**531217**	**MS4N-LFR-1/4-D7-CRV-AS**	1D		**531209**	**MS4N-LFR-1/4-D7-ERV-AS**	1D	
Metal bowl									
Manual	1/8 NPT	**535734**	**MS4N-LFR-1/8-D7-CUM-AS**	Q		**535740**	**MS4N-LFR-1/8-D7-EUM-AS**	Q	
	1/4 NPT	**535750**	**MS4N-LFR-1/4-D7-CUM-AS**	Q		**535756**	**MS4N-LFR-1/4-D7-EUM-AS**	Q	
Fully automatic	1/8 NPT	**535736**	**MS4N-LFR-1/8-D7-CUV-AS**	Q		**535738**	**MS4N-LFR-1/8-D7-EUV-AS**	Q	
	1/4 NPT	**535752**	**MS4N-LFR-1/4-D7-CUV-AS**	Q		**535754**	**MS4N-LFR-1/4-D7-EUV-AS**	Q	

LT = Lead time **1D** typically ships same day/next day **1W** typically ships within 1 week **Q** request a quote for lead time

Filter Regulators MS4N-LFR – Inch Series

Ordering Data – Configurable Products

FESTO

M Mandatory Data ➔

Part No.	Series	Size	Thread		Function		Connection size		Pressure regulation range		Filtration grade		Bowl
527694	MS	4	N	–	LFR	–	⅛, ¼, AQK, AQN, AQP	–	D5 D6 D7	–	E C	–	R U
Order example													
527694	**MS**	**4**	**N**	–	**LFR**	–	**AQK**	–	**D6**	–	**C**	–	**R**

Ordering Table

Grid dimension [mm]	40	Conditions	Code	Enter code
M Part No.	**527694**			
Series	Standard		**MS**	MS
Size	4		**4**	4
Thread	NPT thread		**N**	N
Function	Filter regulator		**-LFR**	-LFR
Connection size	Body thread ⅛ NPT		**-⅛**	
	Body thread ¼ NPT		**-¼**	
	Port plate ⅛ NPT (dimensions ➔ 135)		**-AQK**	
	Port plate ¼ NPT (dimensions ➔ 135)		**-AQN**	
	Port plate ⅜ NPT (dimensions ➔ 135)		**-AQP**	
Pressure regulation range	4.4 ... 59 psi		**-D5**	
	4.4 ... 103 psi		**-D6**	
	7.4 ... 176 psi		**-D7**	
Filtration grade	40 µm		**-E**	
	5 µm		**-C**	
Bowl	Plastic bowl with plastic bowl guard		**-R**	
↓	Metal bowl		**-U**	

Transfer order code

527694	**MS**	**4**	**N**	–	**LFR**	–		–		–		–	

Filter Regulators MS4N-LFR – Inch Series

Ordering Data – Configurable Products

FESTO

➔ M	O Options							
Bowl drain	Pressure gauge alternatives	Alternative pressure gauge scale	Secondary venting	Rotary knob	Security	Type of mounting	Reverse flow direction
M H V	VS A8 A4 AD1 AD2 AD3 AD4	BAR MPA	OS	LD	AS	WR WP WPM WB WBM	Z
– M	– A8	–	–	– LD	– AS	– WPM	– Z

Ordering Table

Grid dimension [mm]		40	Conditions	Code		Enter code
↓ M	Bowl drain	Manual		-M		
		Semiautomatic (P1 max. 176 psi)		-H		
		Fully automatic (P1 max. 176 psi)		-V		
O	Pressure gauge alternatives	Cover plate		-VS		
		Adapter plate for EN pressure gauge ⅛, without pressure gauge		-A8		
		Adapter plate for EN pressure gauge ¼, without pressure gauge		-A4		
		Pressure sensor with display, M8 plug, 1 switching output PNP, 3-pin	1	-AD1		
		Pressure sensor with display, M8 plug, 1 switching output NPN, 3-pin	1	-AD2		
		Pressure sensor with display, M12 plug, 1 switching output PNP, 4-pin, analog output 4 ... 20 mA	1	-AD3		
		Pressure sensor with display, M12 plug, 1 switching output NPN, 4-pin, analog output 4 ... 20 mA	1	-AD4		
	Alternative pressure gauge scale	bar	2	-BAR		
		MPa	2	-MPA		
	Secondary venting	Without secondary venting		-OS		
	Rotary knob	Long rotary knob		-LD		
	Security	Lockable rotary knob		-AS		
	Type of mounting	Mounting bracket with knurled nut for regulator head (dimensions ➔ 133)	3	-WR		
		Mounting bracket (dimensions ➔ 136)	4	-WP		
		Mounting bracket (dimensions ➔ 136)	4	-WPM		
		Mounting bracket (dimensions ➔ 132)		-WB		
		Mounting bracket (dimensions ➔ 132)		-WBM		
	Reverse flow direction	Flow direction from right to left		-Z		

1 **AD1 ... AD4** Measuring range max. 147 psi

2 **BAR, MPA** Not with pressure gauge alternatives VS, A8, A4, AD1, AD2, AD3, AD4

3 **WR** Not with long rotary knob LD

4 **WP, WPM** Only with port plate AQK, AQN or AQP

Transfer order code

–		–		–		–		–		–		–		–	

Mounting Attachments and Accessories

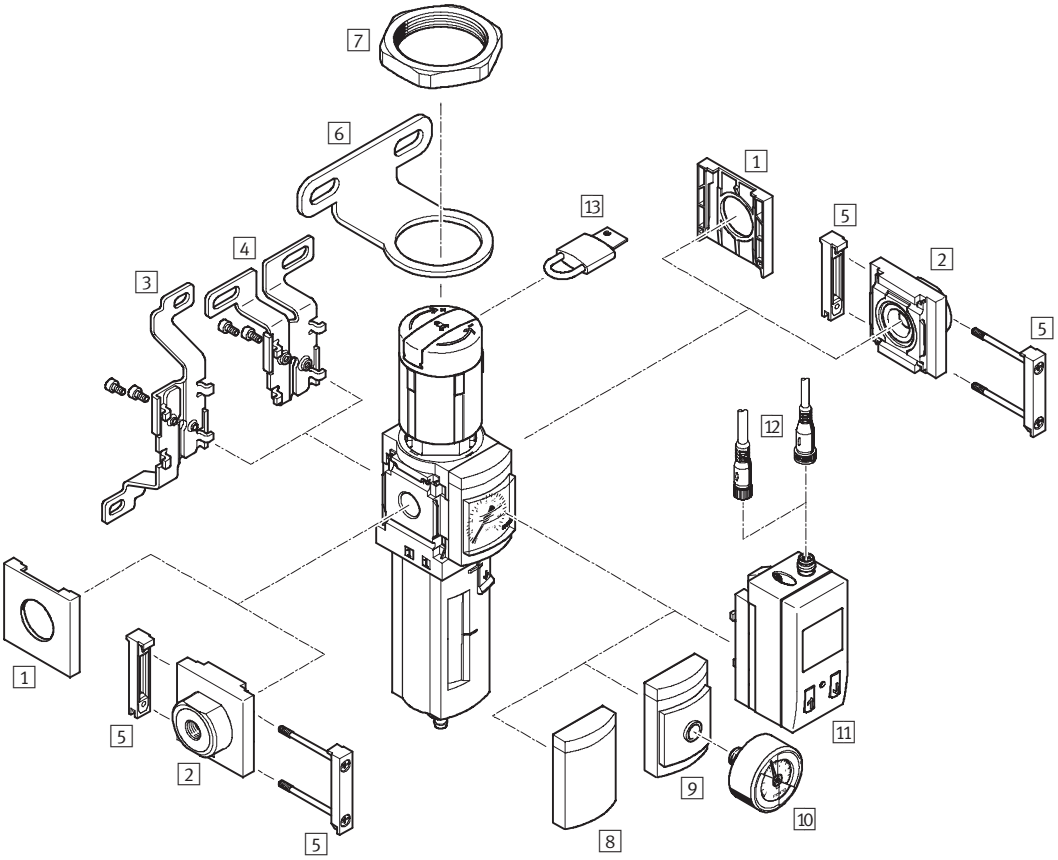

Single unit and combination unit mounting brackets.

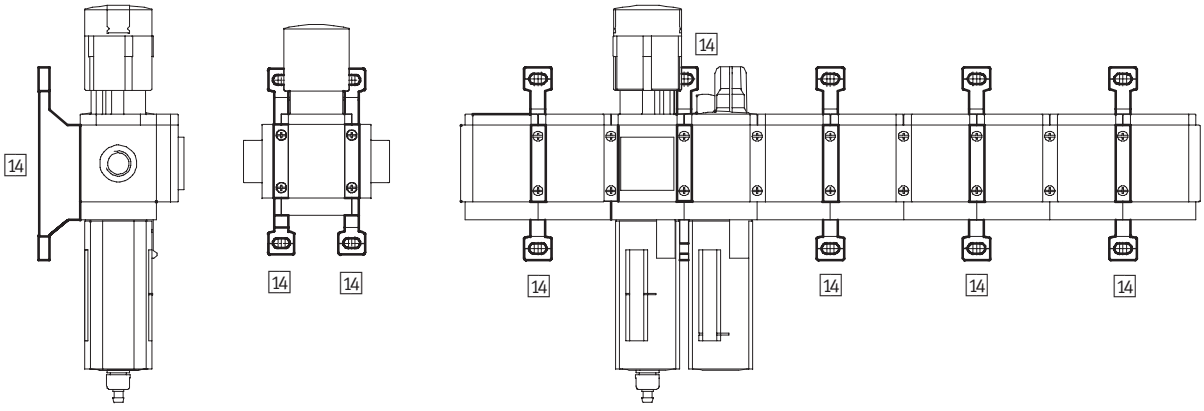

Filter Regulators MS4N-LFR – Inch Series

Accessories Overview

Mounting Attachments and Accessories						
		Single unit		Combination unit		➔ Page
		without port plate	with port plate	without port plate	with port plate	
1	Cover cap MS4-END	■	–	■	–	134
2	Port plate MS4N-AQ...	–	■	–	■	135
3	Mounting bracket MS4-WB	■	■	–	–	132
4	Mounting bracket MS4-WBM	■	■	–	–	132
5	Body connector MS4-MV	–	■	■	■	135
6	Regulator wall bracket MS4-WR	■	■	–	–	133
7	Hex nut MS4-WRS	■	■	■	■	133
8	Cover plate VS	■	■	■	■	128
9	Adapter for EN pressure gauge 1/8/1/4 A8/A4	■	■	■	■	128
10	Pressure gauge MA	■	■	■	■	139
11	Pressure sensor SDE1-...-MS AD1 ... AD4	■	■	■	■	128
12	Plug socket with cable SIM-M8-3.../SIM-M12-4...	■	■	■	■	139
13	Padlock LRVS-D	■	■	■	■	139
14	Mounting bracket MS4-WP/WPB/WPM	–	■	■	■	136

3 **Mounting bracket MS4-WB**
- For wall mounting

Material:
Steel

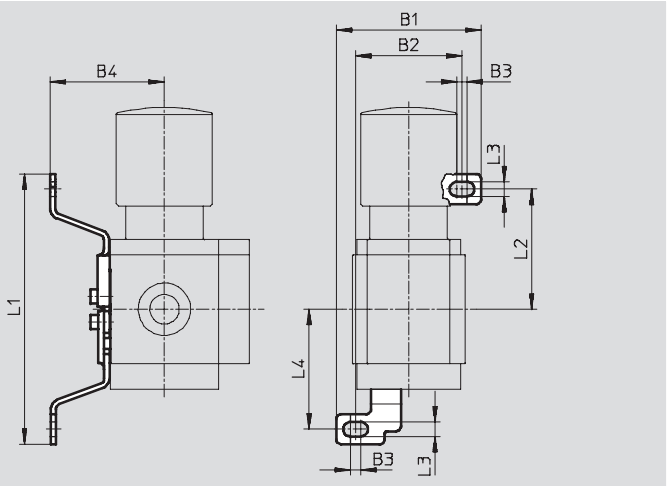

Dimensions and Ordering Data

B1	B2	B3	B4	L1	L2	L3	L4	Weight [lb]	Part No.	Type
2.21	1.62	0.16	1.74	4.12	1.83	0.22	1.83	0.09	**532185**	**MS4-WB**

4 **Mounting bracket MS4-WBM**
- For wall mounting

Material:
Steel

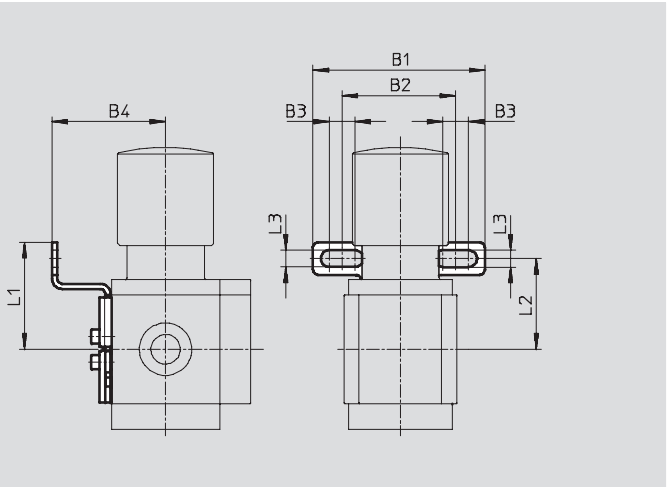

Dimensions and Ordering Data

B1	B2	B3	B4	L1	L2	L3	Weight [lb]	Part No.	Type
2.62	1.73	0.39	1.73	1.63	1.38	0.26	0.10	**526062**	**MS4-WBM**

6 **Mounting bracket MS4-WR**
- For wall mounting a filter regulator and pressure regulator

Material:
Steel

Note
The hex nut for attaching components to this bracket must be ordered separately.

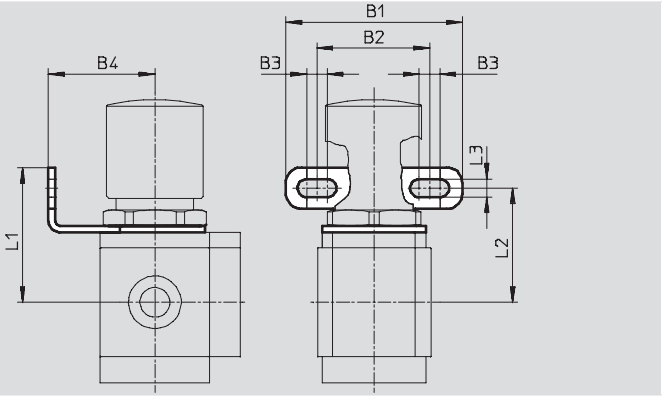

Dimensions and Ordering Data

B1	B2	B3	B4	L1	L2	L3	Weight [lb]	Part No.	Type
2.68	1.73	0.31	1.61	2.05	1.73	0.28	0.10	**526064**	**MS4-WR**

7 **Hex nut MS4-WRS**
- For front panel mounting
- For attaching components to the mounting bracket MS-WR

Material:
Aluminum

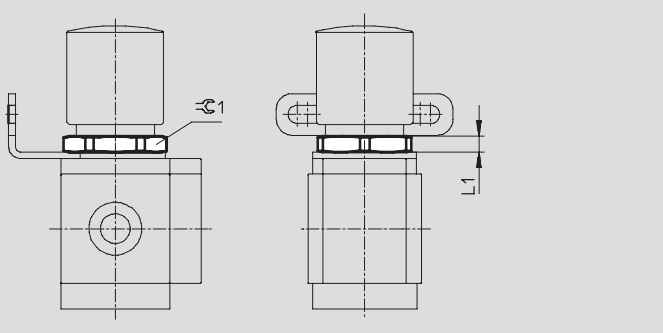

Dimensions and Ordering Data

L1	⌀1	Weight [lb]	Part No.	Type
0.24	1.42	0.01	**532187**	**MS4-WRS**

1 Cover cap MS4-END

- Can be used to cover the body sides of the first and last module if port plates are not used.

Material:
Reinforced polyamide
Free of copper and PTFE

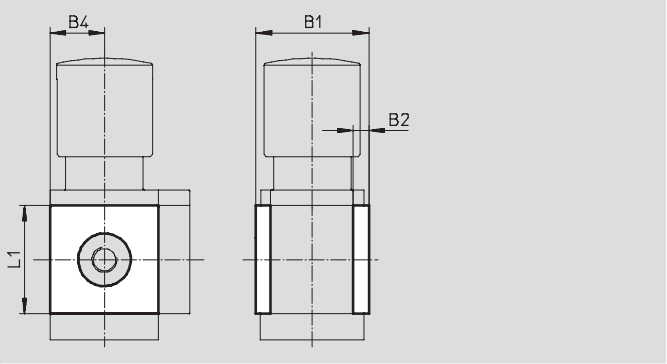

Dimensions and Ordering Data

B1	B2	B4	L1	Part No.	Type
1.72	0.24	0.83	1.65	**538779**	**MS4-END**

Mounting plate MS4-AEND

- In combination with mounting bracket MS-WP or MS-WPB for mounting an individual unit with body thread on a wall

Material:
Reinforced polyamide
Conforms to RoHS
Free of copper and PTFE

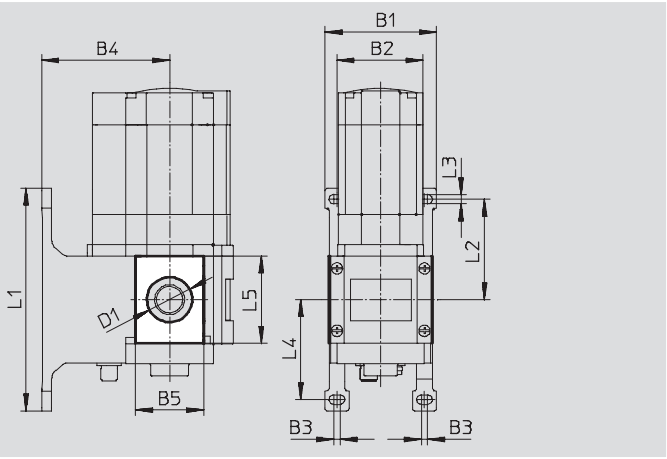

Dimensions and Ordering Data

B1	B2	B3	B4		B5	D1	L1	L2	L3	L4	L5	CRC[1)]	Weight	Part No.	Type
			WP	WPB		∅							[lb]		
2.17	1.58	0.16	1.73	2.60	1.20	0.80	4.17	1.83	0.22	1.84	1.65	2	0.01	**542966**	**MS4-AEND**

1) Corrosion resistance class 2 according to Festo standard 940 070
Components requiring moderate corrosion resistance. Externally visible parts with primarily decorative surface requirements which are in direct contact with a normal industrial environment or media such as coolants or lubricating agents.

2 **Port plate MS4N-AQ...**
- Adapter for pneumatic connection

Material:
Aluminum

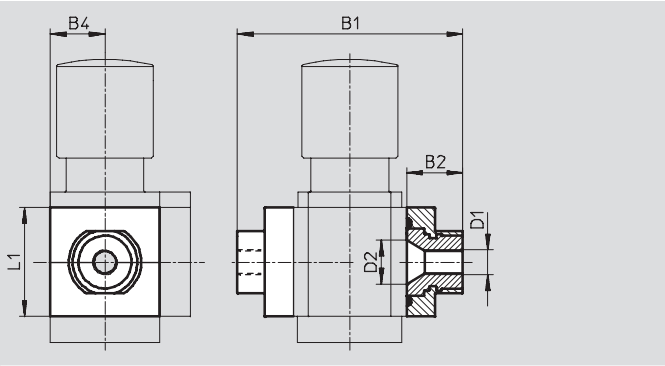

Dimensions and Ordering Data

B1	B2	B4	D1	D2	L1	Weight [lb]	Part No.	Type
3.29	0.85	0.83	1/8 NPT	0.66	1.65	0.26	**526065**	**MS4N-AQK**
			1/4 NPT				**526066**	**MS4N-AQN**
			3/8 NPT				**526067**	**MS4N-AQP**

5 **Body connector MS4-MV**
- For connecting modules

Material:
Stainless steel/polyacetate

Ordering Data

Weight [lb]	Part No.	Type
0.07	**532798**	**MS4-MV**

14 Mounting Bracket MS4-WP...

Suggested placement of wall mounting brackets when mounting air preparation combinations

1 unit: 1.575 in

2 units: 3.15 in

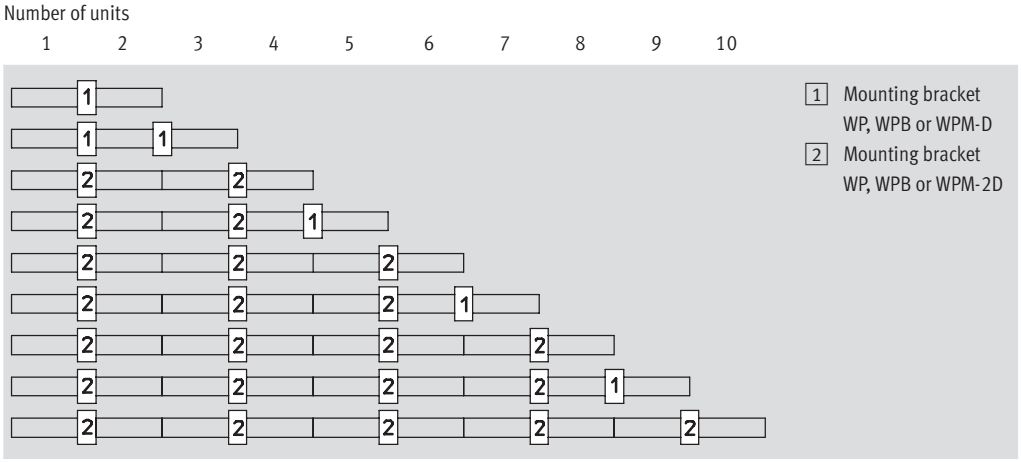

Mounting dimensions

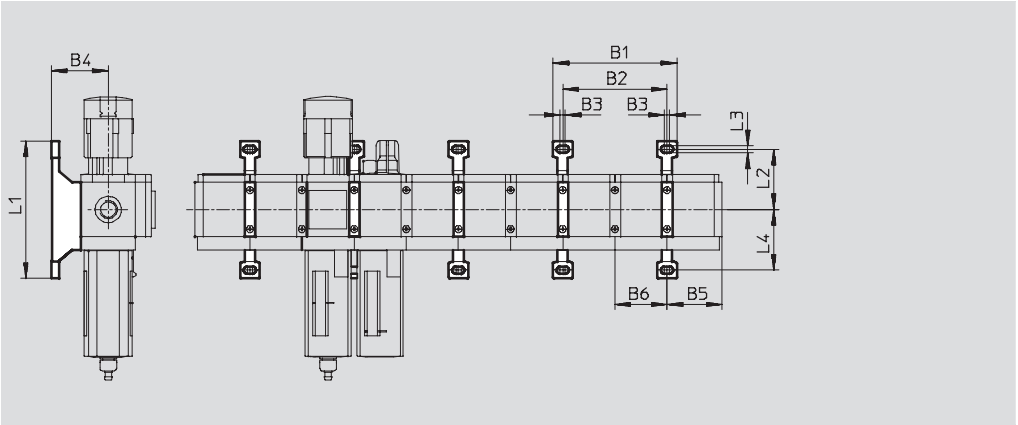

Type	B1	B2	B3	B4	B5	B6	L1	L2	L3	L4
MS4-WP	3.75	3.15	0.16	1.73	1.65	1.57	4.17	1.83	0.22	1.84
MS4-WPB				2.60						
MS4-WPM-...D				1.73			3.65	1.37		1.57

Mounting bracket MS4-WP

- To connect the modules for wall mounting
- In combination with a port plate MS-AG... for mounting an individual unit on a wall
- In combination with mounting plate MS-AEND or for mounting an individual unit with body thread on a wall
- For pressure regulator LRB with angled outlet block B... at rear

Material:
Die-cast aluminum

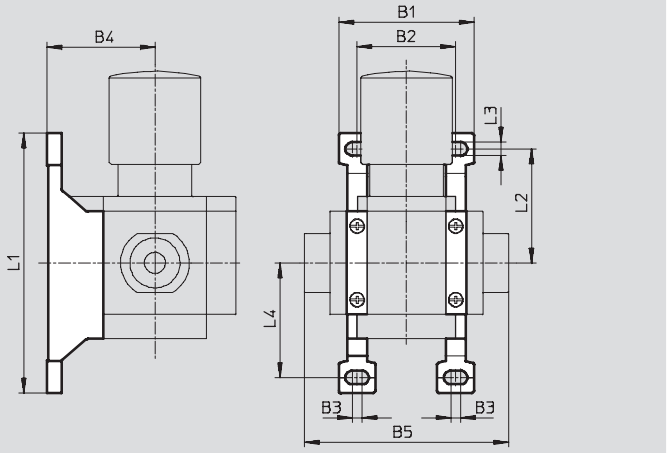

Dimensions and Ordering Data

B1	B2	B3	B4	B5	L1	L2	L3	L4	Weight [lb]	Part No.	Type
2.17	1.58	0.16	1.73	3.28	4.17	1.83	0.22	1.84	0.08	**532184**	**MS4-WP**

Mounting bracket MS4-WPB

- To connect the modules for wall mounting
- In combination with a port plate MS-AG... for mounting an individual unit on a wall
- In combination with mounting plate MS-AEND or for mounting an individual unit with direct thread on a wall
- Provides large wall gap for pressure regulator

Material:
Die-cast aluminum

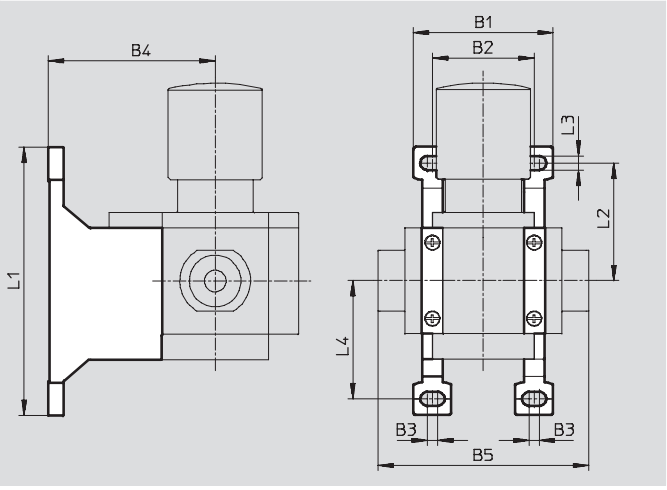

Dimensions and Ordering Data

B1	B2	B3	B4	B5	L1	L2	L3	L4	Weight [lb]	Part No.	Type
2.17	1.58	0.16	2.60	3.28	4.17	1.83	0.22	1.84	0.11	**526063**	**MS4-WPB**

Mounting bracket MS4-WPM

- To connect the modules for wall mounting
- In combination with a port plate MS-AG... for mounting an individual unit on a wall
- Speedy attachment and detachment
- For installation of modules with regulating knob pointing downwards

The distance piece D or 2D (designated in the type code) is included in the scope of delivery and ensures the correct clearance

Material:
Die-cast aluminum

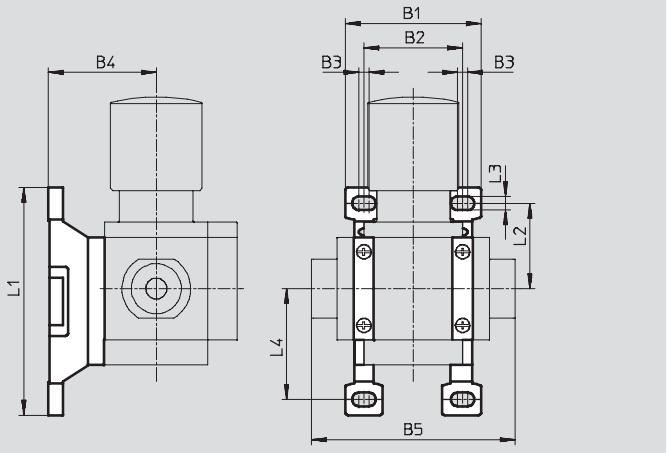

Dimensions and Ordering Data

B1	B2	B3	B4	B5	L1	L2	L3	L4	Clearance	Weight [lb]	Part No.	Type
2.17	1.57	0.16	1.73	3.28	3.65	1.37	0.22	1.78	1.57	0.09	**526060**	**MS4-WPM-D**
3.75	3.15			4.86					3.15	0.11	**526061**	**MS4-WPM-2D**

Body connector MS4-MVM

- For installation of modules with regulating knob pointing downwards

Material:
Die-cast aluminum

Ordering Data

Size	Part No.	Type
MS4	**532800**	**MS4-MVM**

11 Ordering Data – Plug Socket with Cable SIM-M8 — Technical data ➔ www.festo.com/catalog/sim-m8

	Electrical connection	Cable length [ft]	Part No.	Type
	M8x1, 3-pin	8.2	**159420**	**SIM-M8-3GD-2,5-PU**
		16.4	**159421**	**SIM-M8-3GD-5-PU**
		32.8	**192964**	**SIM-M8-3GD-10-PU**
	M8x1, 3-pin	8.2	**159422**	**SIM-M8-3WD-2,5-PU**
		16.4	**159423**	**SIM-M8-3WD-5-PU**
		32.8	**192965**	**SIM-M8-3WD-10-PU**

11 Ordering Data – Plug Socket with Cable SIM-M12 — Technical data ➔ www.festo.com/catalog/sim-m12

	Electrical connection	Cable length [ft]	Part No.	Type
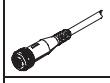	M12x1, 4-pin	16.4	**164259**	**SIM-M12-4GD-5-PU**
	M12x1, 4-pin	16.4	**164258**	**SIM-M12-4WD-5-PU**

10 Ordering Data – Pressure Gauge MA — Technical data ➔ www.festo.com/catalog/ma

	Nominal size	Pneumatic connection	Indicating range [bar]	Indicating range [psi]	Part No.	Type
	Pressure gauge MA, DIN EN 837-1					
	1.57	¼ NPT	0 … 16	0 … 232	**183908**	**MA-40-16-N¼-EN**
	Pressure gauge MA, DIN EN 837-1, with red-green range					
	1.57	⅛ NPT	–	0 … 232	**530388**	**MA-40-232-N⅛-PSI-E-RG**
	1.97	¼ NPT	–	0 … 232	**530391**	**MA-50-232-N¼-PSI-E-RG**

13 Ordering Data – Padlock LRVS-D

	Description	Weight [lb]	Part No.	Type
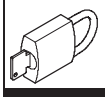	for regulators, filter/regulators and manual on-off valves	0.24	**193786**	**LRVS-D**

Filter Regulators MS4N-LFR – Inch Series

Replacement Parts

Ordering Data – Wearing Parts Kits			
Size	Description	Part No.	Type
MS4	Snap-ring, membrane, bellows, O-rings, screws, stem	**673647**	**MS4-LFR**

Ordering Data – Filter Cartridges			
Size	Filtration grade [µm]	Part No.	Type
MS4	5	**534501**	**MS4-LFP-C**
	40	**534502**	**MS4-LFP-E**

- For spare parts go to: www.festo.com/en/spare_parts_service

Product Range and Company Overview

A Complete Suite of Automation Services

Our experienced engineers provide complete support at every stage of your development process, including: conceptualization, analysis, engineering, design, assembly, documentation, validation, and production.

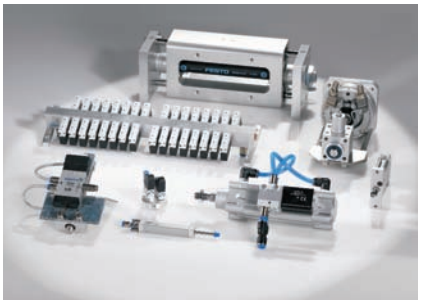

Custom Automation Components
Complete custom engineered solutions

Custom Control Cabinets
Comprehensive engineering support and on-site services

Complete Systems
Shipment, stocking and storage services

The Broadest Range of Automation Components

With a comprehensive line of more than 30,000 automation components, Festo is capable of solving the most complex automation requirements.

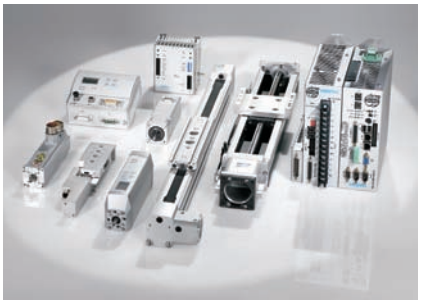

Electromechanical
Electromechanical actuators, motors, controllers & drives

Pneumatics
Pneumatic linear and rotary actuators, valves, and air supply

PLCs and I/O Devices
PLC's, operator interfaces, sensors and I/O devices

Supporting Advanced Automation... As No One Else Can!

Festo is a leading global manufacturer of pneumatic and electromechanical systems, components and controls for industrial automation, with more than 11,500 employees in 56 national headquarters serving more than 180 countries. For more than 80 years, Festo has continuously elevated the state of manufacturing with innovations and optimized motion control solutions that deliver higher performing, more profitable automated manufacturing and processing equipment. Our dedication to the advancement of automation extends beyond technology to the education and development of current and future automation and robotics designers with simulation tools, teaching programs, and on-site services.

Quality Assurance, ISO 9001 Certification

Festo Corporation is committed to provide Festo products and services that will meet or exceed our customers' requirements in product quality, delivery, customer service and satisfaction.

All Festo locations within the United States are registered to ISO 9001.

FESTO
UL REGISTERED FIRM
ISO 9001
A4853

© Copyright 2007, Festo Corporation. While every effort is made to ensure that all dimensions and specifications are correct, Festo cannot guarantee that publications are completely free of any error, in particular typing or printing errors. Accordingly, Festo cannot be held responsible for the same. For Liability and Warranty conditions, refer to our "Terms and Conditions of Sale", available from your local Festo office. All rights reserved. No part of this publication may be reproduced, distributed, or transmitted in any form or by any means, electronic, mechanical, photocopying or otherwise, without the prior written permission of Festo. All technical data subject to change according to technical update.

Festo North America

United States

Customer Resource Center
502 Earth City Expy., Suite 125
Earth City, MO 63045

For ordering assistance, or to find
your nearest Festo Distributor,
Call: 1.800.99.FESTO
Fax: 1.800.96.FESTO
Email: customer.service@us.festo.com

For technical support,
Call: 1.866.GO.FESTO
Fax: 1.800.96.FESTO
Email: product.support@us.festo.com

Headquarters
Festo Corporation
395 Moreland Road
P.O. Box 18023
Hauppauge, NY 11788
www.festo.com/us

Sales Offices

Appleton
N. 922 Tower View Drive, Suite N
Greenville, WI 54942

Boston
120 Presidential Way, Suite 330
Woburn, MA 01801

Chicago
1441 East Business Center Drive
Mt. Prospect, IL 60056

Dallas
1825 Lakeway Drive, Suite 600
Lewisville, TX 75057

Detroit - Automotive Engineering Center
2601 Cambridge Court, Suite 320
Auburn Hills, MI 48326

New York
395 Moreland Road
Hauppauge, NY 11788

Silicon Valley
2800 Collier Canyon Road
Livermore, CA 94550

Design and Manufacturing Operations

East: 395 Moreland Road, Hauppauge, NY 11788

Central: 1441 East Business Center Drive, Mt. Prospect, IL 60056

West: 2800 Collier Canyon Road, Livermore, CA 94550

Mexico

Headquarters
Festo Pneumatic, S.A.
Av. Ceylán 3, Col. Tequesquinahuac
54020 Tlalnepantla, Edo. de México
Call: 011 52 [55] 53 21 66 00
Fax: 011 52 [55] 53 21 66 65
Email: festo.mexico@mx.festo.com
www.festo.com/mx

Canada

Headquarters
Festo Inc.
5300 Explorer Drive
Mississauga, Ontario L4W 5G4
Call: 1.905.624.9000
Fax: 1.905.624.9001
Email: info.ca@ca.festo.com
www.festo.com/ca

Festo Worldwide

Argentina Australia Austria Belarus Belgium Brazil Bulgaria Canada Chile China Colombia Croatia Czech Republic Denmark Estonia Finland France Germany Great Britain Greece Hong Kong Hungary India Indonesia Iran Ireland Israel Italy Japan Latvia Lithuania Malaysia Mexico Netherlands New Zealand Norway Peru Philippines Poland Romania Russia Serbia Singapore Slovakia Slovenia South Africa South Korea Spain Sweden Switzerland Taiwan Thailand Turkey Ukraine United States Venezuela

www.festo.com