FESTO

Robot station

Manual

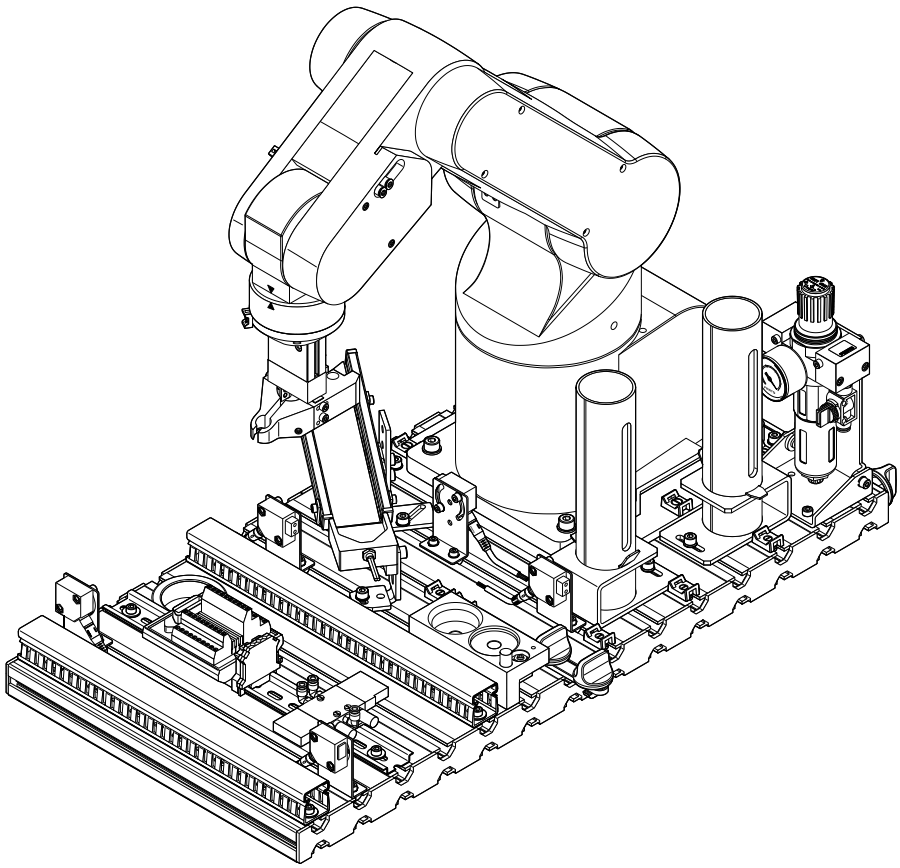

648814 EN
04/06 R2.2

Intended use

This station has been developed and produced solely for vocational and further training purposes in the field of automation and technology. The company undertaking the training and/or the instructors is/are to ensure that trainees observe the safety precautions described in the manuals provided.
Festo Didactic herewith excludes any liability for damage or injury caused to trainees, the training company and/or any third party, which may occur if the system is in use for purposes other than purely for training, unless the said damage/injury has been caused by Festo Didactic deliberately or through gross negligence.

Order No.:	648814
Status:	04/2006
Authors:	Frank Ebel, Markus Pany
Graphics:	Doris Schwarzenberger, Albert Sigel
Layout:	04/2006

© Festo Didactic GmbH & Co. KG, D-73770 Denkendorf, 2006

Internet: www.festo-didactic.com
e-mail: did@de.festo.com

The copying, distribution and utilisation of this document as well as the communication of its contents to others without express authorisation is prohibited. Offenders will be held liable for the payment of damages. All rights reserved, in particular the right to carry out patent, utility model or ornamental design registration.

Contents

1. Introduction 5
1.1 Training contents 6
1.2 Important notes 7
1.3 Duty of the operating authority 7
1.4 Duty of trainees 7
1.5 Risks involved in dealing with the Modular Production System 8
1.6 Warranty and liability 9
1.7 Intended use 9

2. Notes on safety 11

3. Technical data 13
3.1 Combinations 13

4. Transport/Unpacking/Scope of delivery 15

5. Design and function 17
5.1 The Robot station 17
5.2 Function 19
5.3 Sequence description 19
5.4 Slide module 21
5.5 Retainer module 22
5.6 Robot RV-2AJ 23
5.6 1 Robot controller 24
5.62 Teaching pendant T/B 25
5.6.3 Gripper 26
5.7 Assembly retainer module 28
5.8 Magazine module 30

6. Commissioning 31
6.1 Workstation 31
6.2 Mechanical set up 31
6.2.1 Robot system 31
6.2.2 Installing the pneumatic hand interface 32
6.2.3 Assembling profile plate 32
6.2.4 Assembling the station 33
6.3 Ajust sensors 34
6.3.1 Diffuse sensor (Retainer, detection of workpiece) 34
6.3.2 Diffuse sensor (Gripper, colour distinction) 35
6.3.3 Diffuse sensor (Assembly retainer, orientation of workpiece) 37
6.4 Visual check 38

6.5 Cable connections 39
6.6 Pneumatic connection 41
6.6.1 Manual override 42
6.7 Voltage supply 42
6.8 Commissioning the robot system 43
6.9 Loading the robot program 43
6.10 Teaching positions 44
6.10.1 Position P99: Initial position 45
6.10.2 Position P1: Pick up red workpiece 46
6.10.3 Position P2: Reference point at the Assembly retainer module 47
6.10.4 Position P3: Identification (colour of workpiece) 48
6.10.5 Position 4: Deposit position red/metallic workpiece 49
6.10.6 Position P5: Deposit position black workpiece 50
6.11 Starting the sequence 51
6.12 Combination of stations 52
6.12.1 Networking 52

7. Maintenance 53
7.1 Replacement of batteries 53

Updates 55

© Festo Didactic GmbH & Co. KG • 648814

1. Introduction

The Festo Didactic Learning System for Automation is designed to meet a number of different training and vocational requirements. The systems and stations of the Modular Production System (MPS®) facilitate industry-orientated vocational and further training and the hardware consists of didactically suitable industrial components.

The Robot station provides you with an appropriate system for practice-orientated tuition of the following key qualifications

- Social competence,
- Technical competence and
- Methodological competence

Moreover, training can be provided to instil team spirit, willingness to cooperate and organisational skills.

Actual project phases can be taught by means of training projects, such as:

- Planning,
- Assembly,
- Programming,
- Commissioning,
- Operation,
- Maintenance and
- Fault finding.

1.1 Training contents

Training contents covering the following subjects can be taught:

- Mechanics:
  - Mechanical construction of a station
- Sensors:
  - Correct use of optical sensors
- Robotics:
  - Areas of application of robots
  - Fundamentals of robotics
  - Terminology used in robotics
  - Robot programming
- Commissioning
  - Commissioning of a production system

Topics for project work

- Selecting grippers
  - electrical grippers
  - pneumatic grippers
- Safety during pneumatic power failure
  - Compressed air reservoir

© Festo Didactic GmbH & Co. KG • 648814

1.2 Important notes

The basic requirement for safe use and trouble-free operation of the MPS® is to observe the fundamental safety recommendations and regulations.

This manual contains important notes concerning the safe operation of the MPS®.

The safety recommendations in particular must be observed by anyone working on the MPS®.

Furthermore, the rules and regulations for the prevention of accidents applicable to the place of use must be observed.

1.3 Duty of the operating authority

The operating authority undertakes to ensure that the MPS® is used only by persons who:

- are familiar with the basic regulations regarding operational safety and accident prevention and who have received instructions in the handling of the MPS®,
- have read and understood the chapter on safety and the cautionary notes in this manual.

Safety-conscious working of the persons should be regularly vetted.

1.4 Duty of trainees

Prior to commencing work, all persons assigned to working on the MPS® have a duty to:

- read the chapter on safety and the cautionary notes in this manual and,
- observe the basic regulations regarding operational safety and the prevention of accidents.

1.5 Risks involved in dealing with the Modular Production System

The MPS® is designed according to state of the art technology and in compliance with recognised safety regulations. However when using the system there is nevertheless a risk of physical or fatal injury to the user or third parties or of damage being caused to the machinery or other material assets.

The MPS® is to be used only:

- for its intended purpose and
- in an absolutely safe conditions.

Faults impairing safety must be rectified immediately!

© Festo Didactic GmbH & Co. KG • 648814

1.6 Warranty and liability

In principle all our „Terms and Conditions of Sale“ apply. These are available to the operating authority upon conclusion of the contract at the latest. Warranty and liability claims for persons or material damage are excluded if these can be traced back to one or several of the following causes:

- Use of the MPS® not in accordance with its intended purpose
- Incorrect assembly, commissioning, operation and maintenance of the MPS®
- Operation of the MPS® using faulty safety equipment or incorrectly fitted or non operational safety or protective devices
- Non observance of notes in the manual regarding transport, storage, assembly, commissioning, operation, maintenance and setting up of the MPS®
- Unlawful constructional modifications on the MPS®
- Inadequate monitoring of components subject to wear
- Incorrectly carried out repairs
- Catastrophies as a result of foreign bodies and vis major.

Festo Didactic herewith rules out any liability for damage or injury to trainees, the training company and/or other third parties which may occur during the use/operation of the system other than purely in a training situation, unless such damage has been caused intentionally or due to gross negligence by Festo Didactic.

1.7 Intended use

This system has been developed and produced exclusively for vocational and further training in the field of automation and technology. The training authority and/or the instructors is/are to ensure that trainees observe the safety precautions described in the manual provided.

The use of the system for its intended purpose also includes:

- following all advice in the manual and
- carrying out inspection and maintenance work.

© Festo Didactic GmbH & Co. KG • 648814

2. Notes on safety

General

- Trainees must only work on the station under the supervision of an instructor.
- Observe the data in the data sheets for the individual components, in particular all notes on safety!

Electrics

- Electrical connections are to be wired up or disconnected only when power is disconnected!
- Use only low voltages of up to 24 V DC.

Pneumatics

- Do not exceed the permissible pressure of 8 bar (800 kPa).
- Do not switch on compressed until you have established and secured all tubing connections.
- Do not disconnect air lines under pressure.
- Particular care is to be taken when switching on the compressed air. Cylinders may advance or retract as soon as the compressed air is switched on.

Robotic system

- Do not touch any moving part of the robot during operation. Any work within the operation space must be done after switching off the power.
- Do not store a teaching box not connected to the robot control close to the robot because the built-in EMERGENCY-STOP device is not functional.
- If the gripper contains a part during an EMERGENCY-STOP, this will be dropped during the reset function (nest travel).

Mechanics

- Securely mount all components on the plate.
- No manual intervention unless the machine is at rest.

© Festo Didactic GmbH & Co. KG • 648814

3. Technical data

Parameter	Value
Operating pressure	6 bar (600 kPa)
Voltage supply	24 V DC, 4.5 A

3.1 Combinations

MPS® station	Possible direct MPS® downstream stations										
	Testing (PR)	Proces-sing (BE)	Hand-ling (HA)	Buffer (PU)	Pick& Place (PP)	Fluidic-Muscle Press (FP)	Separat-ing (TR)	Storing (LA)	Robot (R)	Assembly* (MO/HS)	Sorting** (SO)
Distributing*** (VE)											
Testing (PR)											
Processing (BE)											
Handling (HA)											
Buffer (PU)											
Pick&Place (PP)											
FluidicMuscle Press (FP)											
Separating (TR)											
Storing (LA)											
Robot (R)											
Assembly* (MO/HS)											

* Assembly with Punching / ** Sorting DP / *** Distributing AS-Interface

© Festo Didactic GmbH & Co. KG • 648814

4. Transport/Unpacking/Scope of delivery

Transport
The MPS® is delivered in a container with a pallet base.

The container must be transported on a suitable fork lift truck at all times and must be secured against tipping or falling off.

The carrier and Festo Didactic are to be notified immediately of any damage caused during transport.

Unpacking
Carefully remove the padding material in the container box when unpacking the station. When unpacking the station, make sure that none of the station assemblies have been damaged.

When unpacking the robot and the robot controller take care of the notes in the Mitsubishi Electric manuals

- MELFA Industrial Robot Instruction Manual RV-1A/RV-2AJ,
  Art.-Nr.: 132308, Status 20010522 , BFP-A8052-C.
- MELFA Industrial Robot Hardware Manual CR1 Controller,
  Art.-Nr.: 133799, Status 20010522 , BFP-A8054-D.

Check the station for any possible damaged once unpacked. The carrier and Festo Didactic are to be notified immediately of any damage.

Scope of delivery
Check the scope of delivery against the delivery note and the order. Festo Didactic must be notified immediately of any discrepancies.

© Festo Didactic GmbH & Co. KG • 648814

5. Design and function

5.1
The Robot station

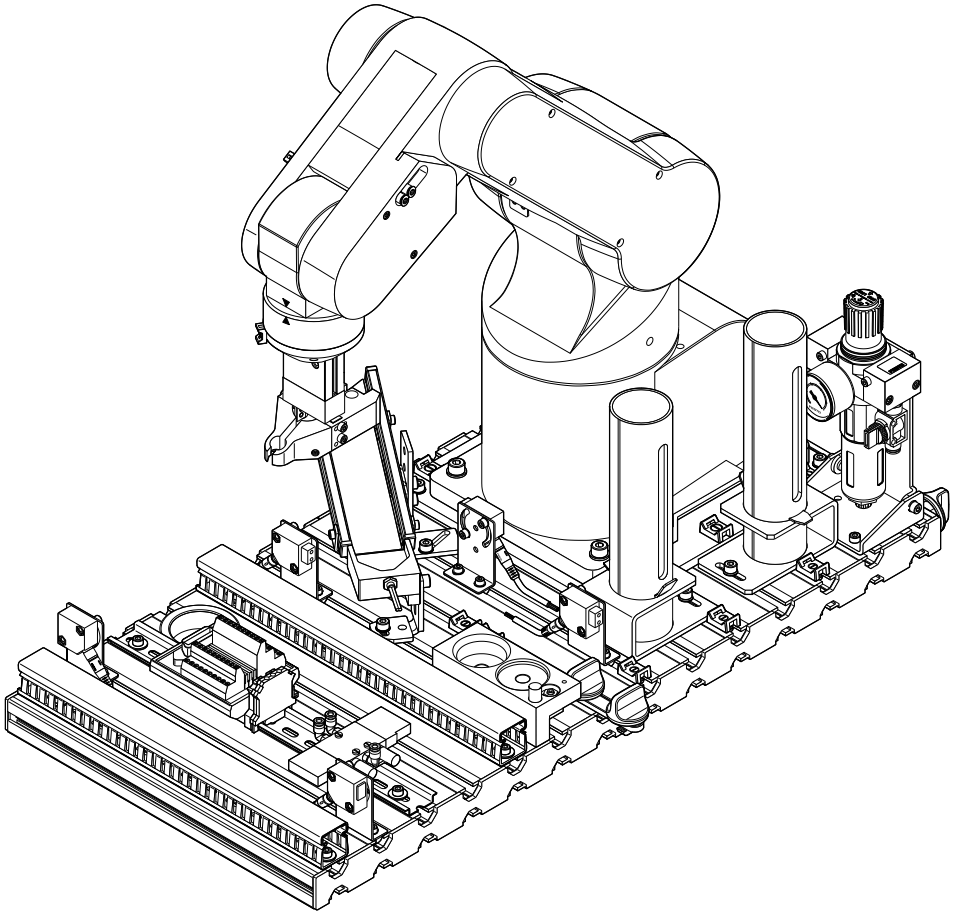

Handling is a subfunction of material flow. Additional subfunctions are conveying and storing.

According to VDI 2860, handling is the creation, defined changing or temporary maintaining of a specified spatial arrangement of geometrically determined bodies.

The function of the Robot station is

- to determine the material characteristics of a workpiece,
- to remove workpieces from a retainer,
- to deposit workpieces on the assembly retainer
- to deposit the workpieces into the “red/metallic” magazine or the “black” magazine or
- to pass on the workpieces to a subsequent station.

The Robot station consists of the following:

- Robot RV-2AJ with robot controller
- Slide module
- Retainer module
- Assembly module
- Magazine module
- Profile plate

- Trolley

Robot station with trolley

© Festo Didactic GmbH & Co. KG • 648814

5.2 Function

Workpieces are transported by means of a slide on the retaining device. The robot fetches the workpieces from the retaining device with the help of a pneumatic gripper. The workpieces are deposited on the assembly retainer. By means of an optical sensor the orientation of the workpieces is checked.

An optical sensor is fitted to the gripper jaw. This sensor differentiates between “black” and “non black” workpieces. The workpieces can be deposited into different magazines on the basis of these criteria. It is also possible to transfer workpieces to a subsequent station.

In combination with the Assembly station the component parts of a short-stroke cylinder are assembled into a functional cylinder.

5.3 Sequence description

Starting prerequisites

- Workpiece in the retainer

Do not insert the workpiece manually on the retainer. Use the slide for feeding.

Initial position

- Robot is in initial position
- Gripper is open

Sequence

1. If a workpiece is detected in the retainer and the START pushbutton at the robot controller is actuated the workpiece is picked up by the robot.
2. The workpiece is transported to the Assembly retainer module and deposited at the “change gripper” position.

Black workpiece

3. The workpiece is transported to the Assembly position.
4. The outer gripper is used to grip the workpiece. The workpiece is transported to the “black workpiece” magazine.
5. The workpiece is deposited.

Red or silver workpiece

6. The workpiece is transported to the Assembly position.
7. The outer gripper is used to grip the workpiece. The workpiece is transported to the “red/metallic workpiece” magazine.
8. The workpiece is deposited.

© Festo Didactic GmbH & Co. KG • 648814

5.4 Slide module

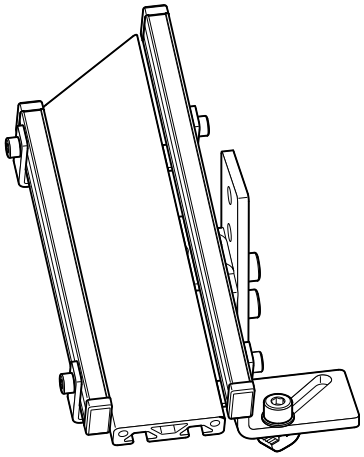

The Slide module is used to transport and store workpieces. The angle of inclination of the slide is infinitely adjustable.

In the Robot station the slide module is used as a workpiece feeder for the Retainer module.

Do not insert the workpiece manually on the retainer. Use the slide for feeding.

5.5 Retainer module

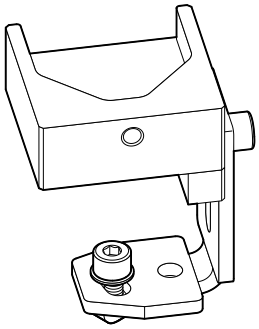

The workpieces are inserted via a slide into the Retainer module. The workpieces are detected in the retainer by an optical reflex light sensor.

Do not insert the workpiece manually on the retainer. Use the slide for feeding.

© Festo Didactic GmbH & Co. KG • 648814

5.6
Robot RV-2AJ

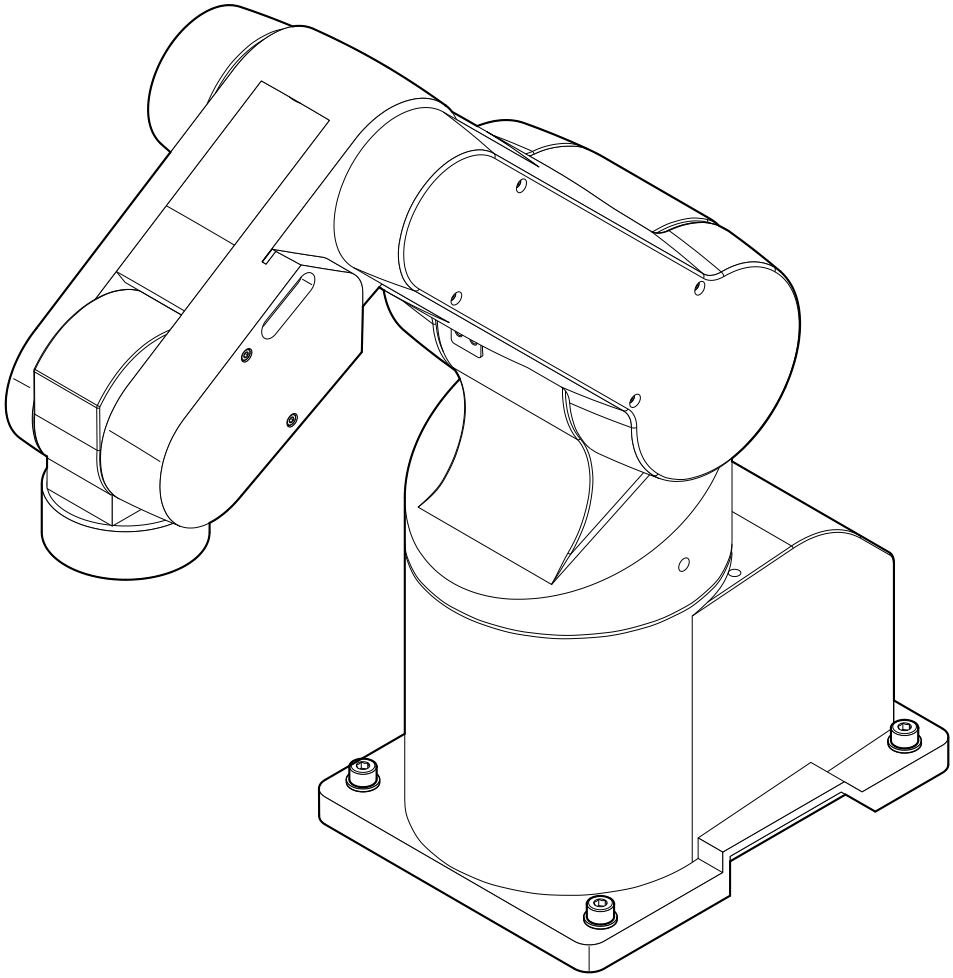

A vertical articulated arm robot is used to transport the workpieces. The robot used here is an industrial robot with 5 axes. The positioning repetition accuracy of the robot is ± 0.02 mm. The maximum speed of the robot arm is 2.200 mm/s. End position and overload monitoring has been integrated. The maximum range of the robot arm is 410 mm.

Note
Further technical data please find in chapter 2 of MELFA Industrial Robot Standard Specifications Manual RV-1A/RV-2AJ, Art.-No.: 132309, Status 20010522 , BFP-A8050-B.

5.6.1 Robot controller

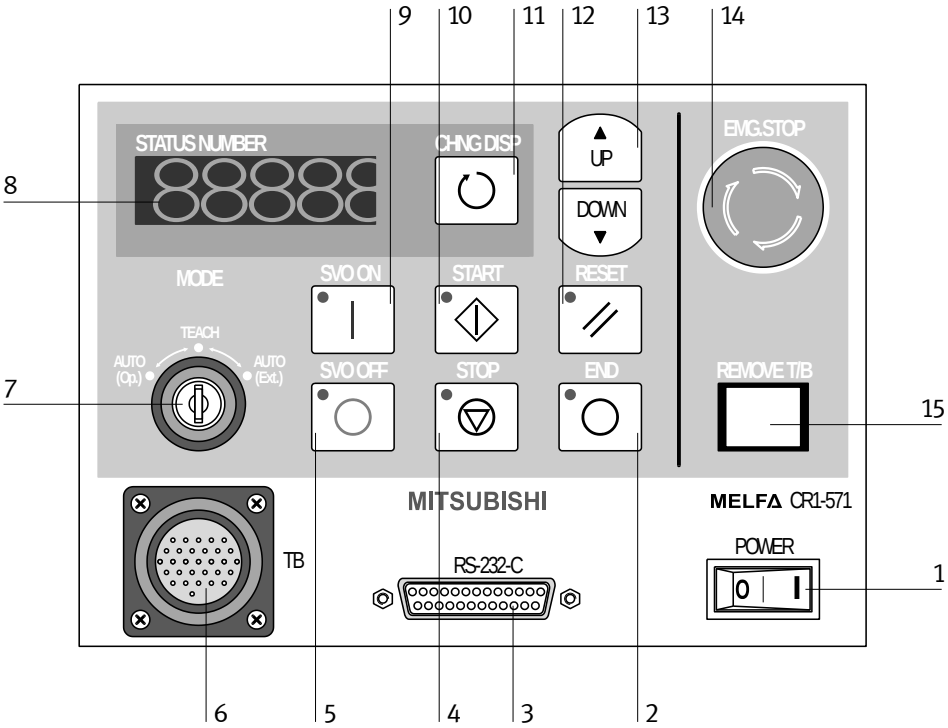

No.	Designation	Function
1	POWER	Turns the control power ON/OFF
2	END	Stops the program being executed
3	RS232C connector	Connector for connecting the PC
4	STOP	Stops the robot immediately The servo does not turn OFF
5	SVO.OFF	Turns OFF the servo power
6	T/B connector	Connector for connecting the T/B
7	MODE Auto (Op) MODE Teach MODE Auto (Ext)	Only operations from the controller are valid Only operations from the T/B are valid Only operations from the external device are valid
8	Status.Number	Alarm no., program no. etc. are displayed
9	SVO.ON	Turns ON the servo power
10	START	Executes the program
11	CHANGE.DISP	Changes details displayed on the display

© Festo Didactic GmbH & Co. KG • 648814

No.	Designation	Function
12	RESET	Resets an error
13	UP/DOWN	Scrolls up and down the details displayed
14	EMG.-STOP	EMERGENCY STOP stops the robot The servo turns OFF
15	REMOVE T/B	Used to connect/disconnect the T/B without turning OFF the control power

5.6.2 Teaching pendant T/B

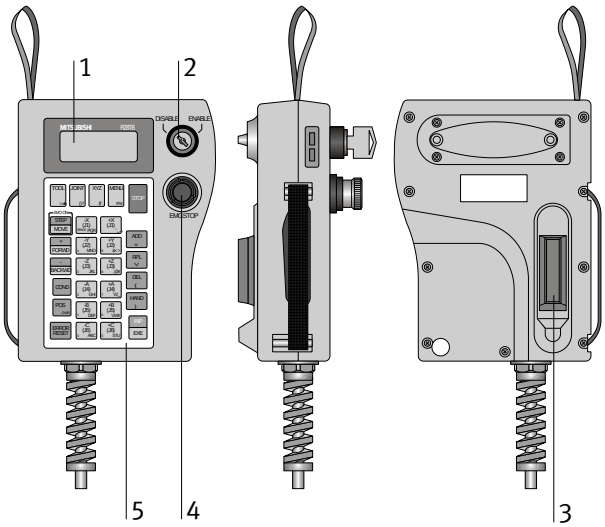

Teaching pendant; 1 LCD display, 2 ENABLE/DISABLE switch, 3 Deadman switch, 4 EMERGENCY STOP switch, 5 Control panel

The T/B is used for teaching robot arm positions. For support of programming and robot control a LCD display is integrated.

At the rear side of the T/B the Deadman switch is located. Press this switch lightly when carrying out functions with the servo ON. If this switch is released ore pressed with force, the servo will turn OFF.

Note
Further information please find in chapter 4.2 of MELFA Industrial Robot Hardware Manual CR1 Controller, Art.-No.: 133799, Status 20010522 , BFP-A8054-D.

5.6.3 Gripper

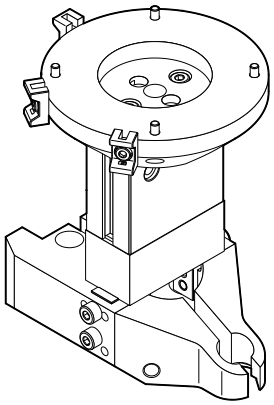

A gripper is fitted to the robot arm. As actuator for the gripper a pneumatic parallel gripper is used. The gripper jaws are constructed in a way that the gripper has three gripping positions.

Outer gripper (1) and middle gripper (2) are used to transport the workpieces body and cover. The piston-/spring gripper (3) is used to transport the piston or the spring.

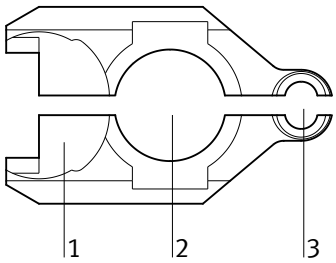

Pneumatic gripper; 1 outer gripper, 2 middle gripper, 3 piston-/spring gripper

© Festo Didactic GmbH & Co. KG • 648814

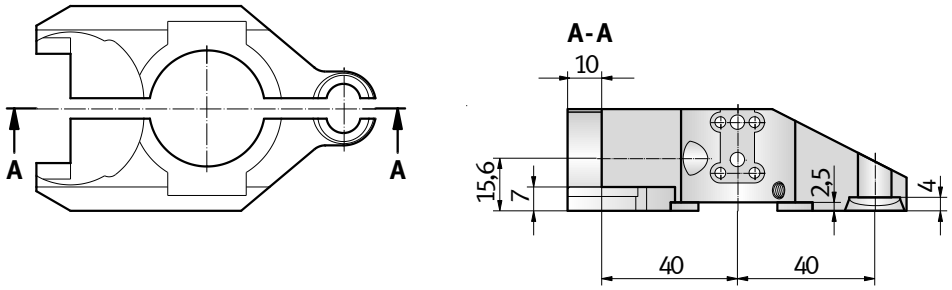

Dimensioned drawing of the gripper

An optical diffuse sensor (fibre optic cable) integrated in the gripper jaw is used for colour identification of the workpieces.

Notes

- Cover, piston and spring are used for the cylinders for assembly. The Robot station uses only the body of the cylinders for assembly as workpiece.
- Endposition sensing 'Gripper open/Gripper closed' is not available.

5.7 Assembly retainer module

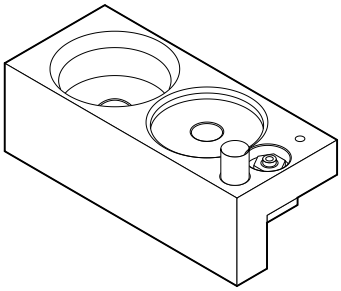

Workpieces are assembled in the Assembly retainer module. The orientation of the inserted workpiece “body” in the “Assembly” position is fixed against twisting via a bolt. In the „Change gripping“ position the workpiece “body” is placed in order that the robot can change the gripping position to check the orientation of the workpiece “body”.

Within the teaching procedure the robot arm is moved to the reference point. From the reference point, the other positions of the Assembly retainer module are calculated by the robot program.

An optical diffuse sensor is used to check the orientation of the workpiece body and cap.

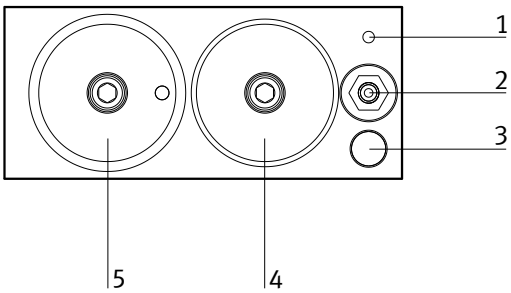

Assembly retainer module; 1 reference point, 2 optical diffuse sensor, 3 cap centering bolt, 4 „Change gripping“ position, 5 “Assembly” position

© Festo Didactic GmbH & Co. KG • 648814

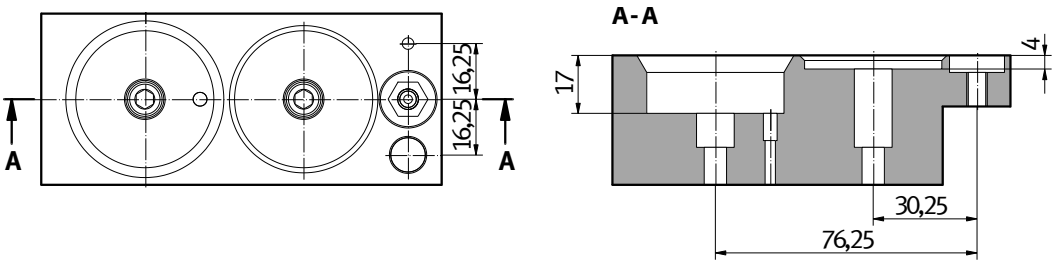

Dimensioned drawing of the Assembly retainer module

5.8 Magazine module

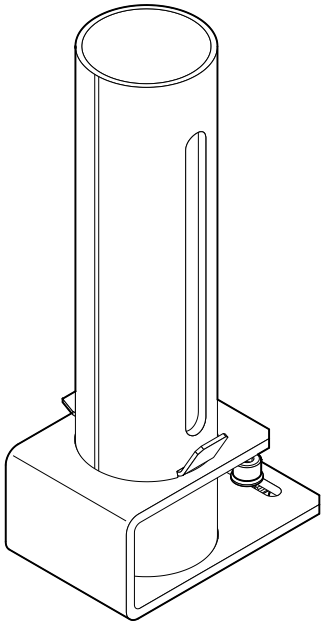

The magazine module is used for the storing of round workpieces. A blocking slide prevents the workpieces from falling out during their removal from the retainer.

Up to 8 workpieces can be stacked in any order in the magazine barrel.

© Festo Didactic GmbH & Co. KG • 648814

6. Commissioning

The Robot station is delivered pre-assembled. You receive

- the robot,
- the robot controller,
- the gripper, and
- the profile plate with assembled components and modules

separately packed.

All components, tubing and wiring is clearly marked so that all connections can be easily re-established.

6.1 Workstation

The following is required to commission the MPS® station:

- The assembled and adjusted MPS® station
- The robot controller
- The Teaching pendant T/B
- A power supply unit 24 V DC, 4.5 A
- A compressed air supply of 6 bar (600 kPa), approx. suction capacity of 50 l/min
- A PC with installed Robot programming software Cosirop, Cosimir Industrial or Cosimir Professional

6.2 Mechanical set up

6.2.1 Robot system

Details on installing of the robot system please find in

- MELFA Industrial Robot Instruction Manual RV-1A/RV-2AJ,
  Art.-No.: 132308, Status 20010522 , BFP-A8052-C.
- MELFA Industrial Robot Hardware Manual CR1 Controller,
  Art.-No.: 133799, Status 20010522 , BFP-A8054-D.

6.2.2 Installing the pneumatic hand interface

- Designation of the interface cards:
  2A-RZ364: motorized hand interface
  2A-RZ375: pneumatic hand interface
- Details on installing please find in chapter 3.1 of the Mitsubishi Electric manual MELFA Industrial Robot Hardware Manual CR1 Controller, Art.-No.: 133799, Status 20010522 , BFP-A8054-D.

6.2.3 Assembling profile plate

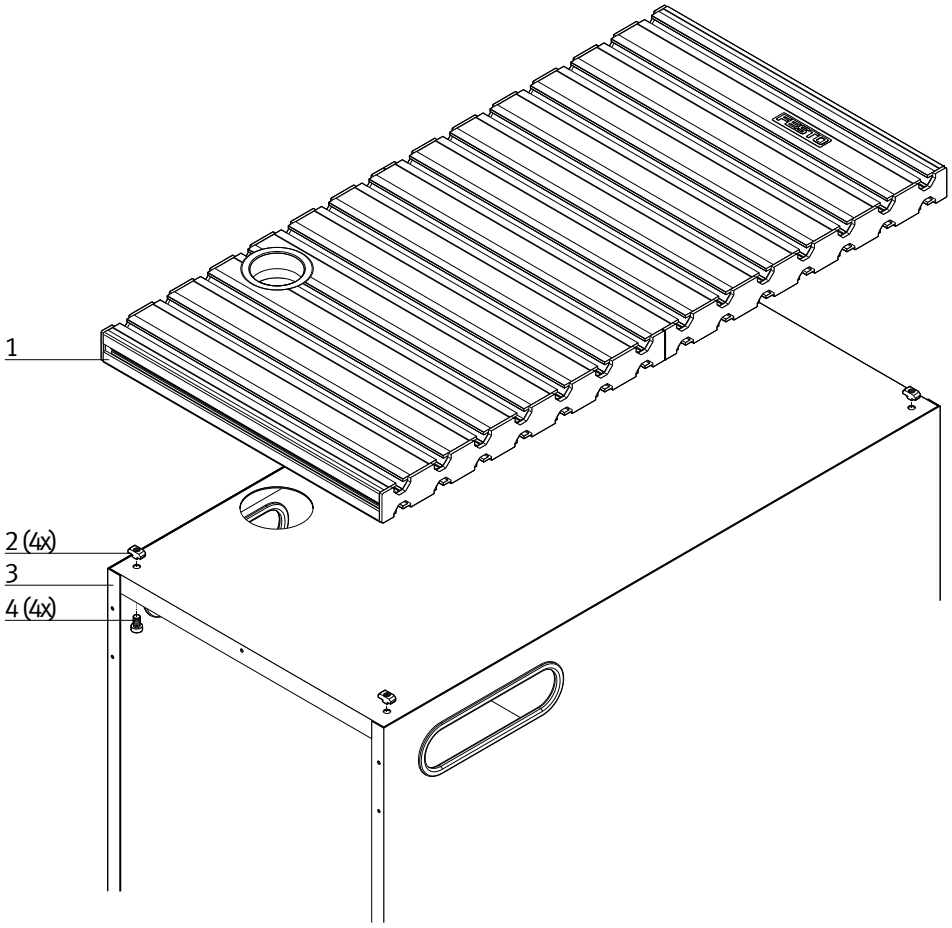

1	Profile plate
2	T-head nut M6 x-32 (4x)
3	Trolley
4	Socket head screw M6x10 (4x)

© Festo Didactic GmbH & Co. KG • 648814

6.2.4 Assembling the station

Instructions on assembling the station please find in the assembly instructions of the Robot station in the directory “Technical documentation\Assembly instructions”.

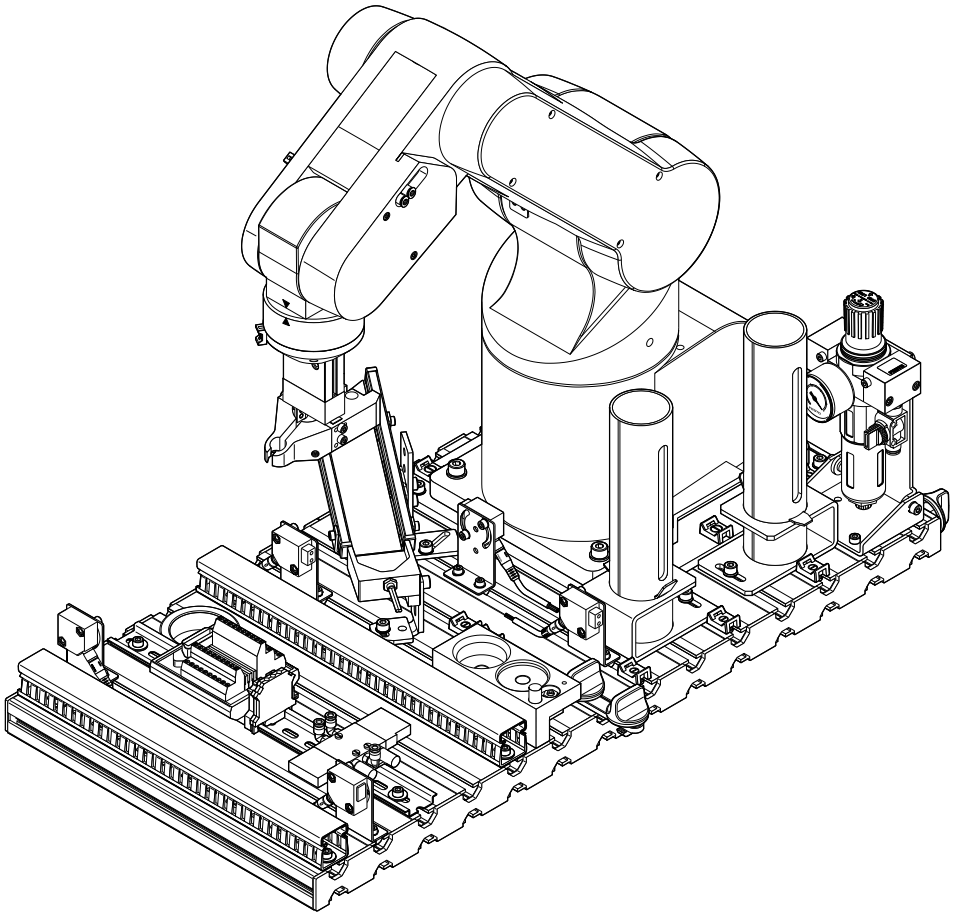

6.3 Adjust sensors

6.3.1 Diffuse sensor (Retainer, detection of workpiece)

The diffuse sensor is used for detection of the workpieces. A fibre optic cable is connected to a fibre optic device. The fibre optic device emits visible red light. The diffuse sensor detects the light reflected by the workpiece Different surfaces or colour changes the amount of reflected light.

Prerequisite

– Retainer module and fibre optic device are assembled.
– Fibre optic device is wired up.
– Power supply unit switched on.

Execution

1. Mount the fibre optic cable head to the Retainer module.
2. Connect the fibre optic cables to the fibre optic device.
3. Place a black workpiece into the retainer.
4. Adjust the potentiometer of the fibre optic device by means of a screwdriver until the switching status display switches to on.

   Note
   Maximal 12 revolutions of the adjusting screw are permissible.

5. Place workpieces into the receptacle.

   Note
   All workpieces should be detected securely.

Documents

- Data sheets
  Fibre optic device SOEG_L (165327) and fibre optic cable diffuse SOEZ-RT (165358)
- Operating instructions
  Fibre optic device (369669) and fibre optic cable diffuse (369682)
- Assembly instructions
  Robot station

© Festo Didactic GmbH & Co. KG • 648814

6.3.2 Diffuse sensor (Gripper, colour distinction)

The diffuse sensor is used for colour distinction of the workpieces. A fibre optic cable is connected to a fibre optic device. The fibre optic device emits visible red light. The diffuse sensor detects the light reflected by the workpiece Different surfaces or colours changes the amount of reflected light.

Prerequisite

- Robot, gripper and fibre optic device are assembled.
- Gripper is tubed up.
- Compressed air supply switched on.
- Fibre optic device is wired up.
- Power supply unit switched on.

Execution

1. Mount the fibre optic cable head to the gripper jaw.
2. Connect the fibre optic cables to the fibre optic device.
3. Place a red workpiece into the retainer. Move the gripper until the diffuse sensor for colour distinction points to the middle of the workpiece. The distance diffuse sensor head – workpiece is about 1 cm.
4. Adjust the potentiometer of the fibre optic device by means of a screwdriver until the switching status display changes to on.

   Note
   Maximal 12 revolutions of the adjusting screw are permissible.

5. Place a black workpiece into the retainer. Move the gripper until the diffuse sensor for colour distinction points to the middle of the workpiece. The distance diffuse sensor head – workpiece is about 1 cm.
6. Adjust the potentiometer of the fibre optic device by means of a screwdriver until the switching status display changes to off.

   Note
   Maximal 12 revolutions of the adjusting screw are permissible.

7. Check the setting of the fibre optic device for black, red and metallic workpieces.

   Note
   Red and metallic workpieces should be detected securely, black workpieces **not**.

Documents

- Data sheets
  Fibre optic device SOEG_L (165327) and fibre optic cable diffuse SOEZ-RT (165358)
- Operating instructions
  Fibre optic device (369669) and fibre optic cable diffuse (369682)
- Assembly instructions
  Robot station and Gripper module

© Festo Didactic GmbH & Co. KG • 648814

6.3.3 Diffuse sensor (Assembly retainer, orientation of workpiece)

The diffuse sensor is used for checking the orientation of the workpieces. A fibre optic cable is connected to a fibre optic device. The fibre optic device emits visible red light. The diffuse sensor detects the light reflected by the workpiece Different surfaces or colours changes the amount of reflected light.

Prerequisite

– Assembly retainer module and fibre optic device are assembled.
– Fibre optic device is wired up.
– Power supply unit switched on.

Execution

1. Mount the fibre optic cable head to the Assembly retainer module. The head is fitted flush with the upper side of the mounting nut.
2. Connect the fibre optic cables to the fibre optic device.
3. Place a cap onto the cap centering bolt of the Assembly retainer module. Rotate the cap until a fixing clip is in the sensing range of the diffuse sensor.
4. Adjust the potentiometer of the fibre optic device by means of a screwdriver until the switching status display changes to on.

   Note
   Maximal 12 revolutions of the adjusting screw are permissible.

5. Rotate the cap until die flat lower side is in the sensing range of the diffuse sensor. The switching status display has to change to off.

Documents

- Data sheets
  Fibre optic device SOEG_L (165327) and fibre optic cable diffuse SOEZ-RT (165358)
- Operating instructions
  Fibre optic device (369669) and fibre optic cable diffuse (369682)
- Assembly instructions
  Robot station and Gripper module

6.4 Visual check

A visual check must be carried out before each commissioning!

Prior to starting up the station, you will need to check:

- The electrical connections
- The correct installation and condition of the compressed air connections
- The mechanical components for visual defects
  (tears, loose connections etc.)
- The function of the EMERGENCY STOP devices

Eliminate any damage detected prior to starting up the station!

© Festo Didactic GmbH & Co. KG • 648814

6.5 Cable connections

- **Robot controller – Robot**
  Connect the motor power cable (CN1) and the motor signal cable (CN2) to the controller (rear side) and the robot.

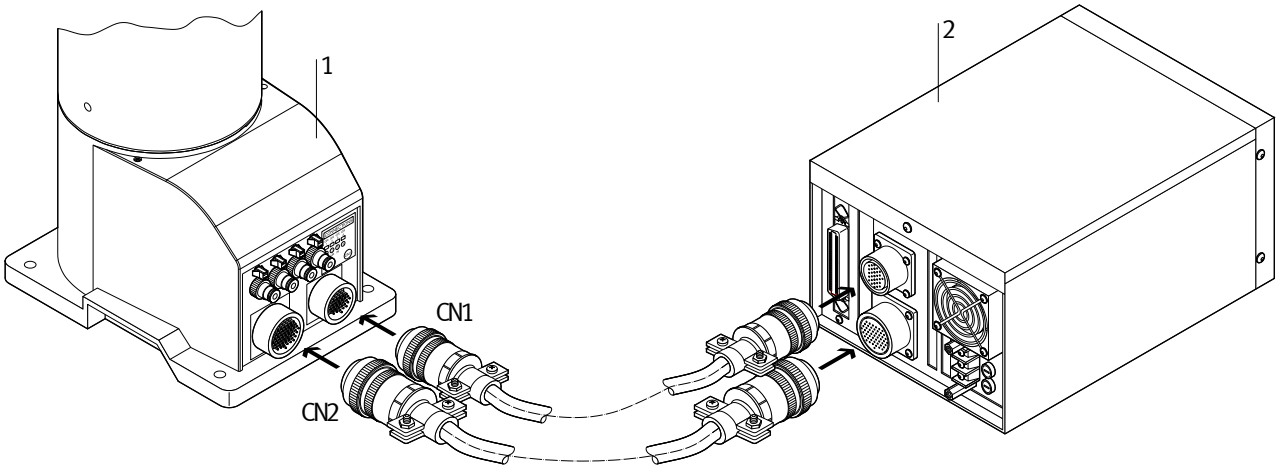

- **Robot controller – T/B**
  Connect the cable of the T/B to the T/B connector at the front side of the controller.

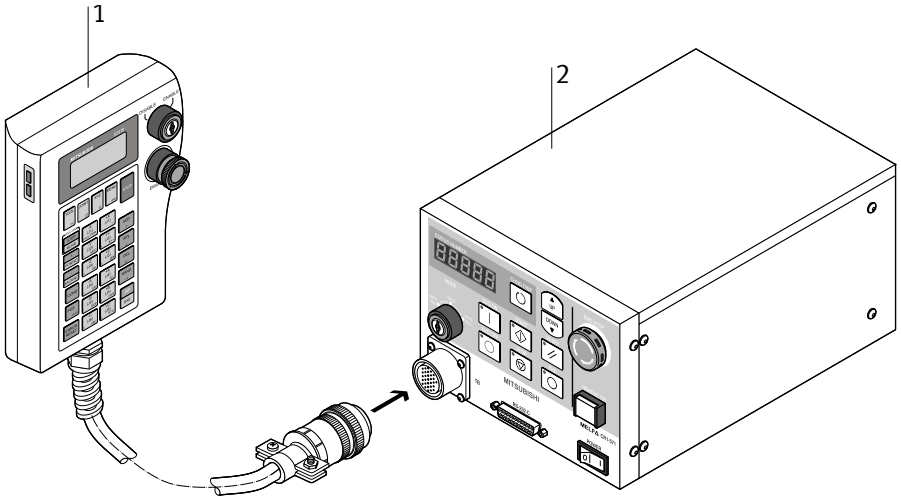

- **Robot controller – Station**
  The terminal XMA2 is to be connected via a special I/O cable (red cable coating, one end 24-pin, the other end 50-pin) to the robot controller (External I/O).

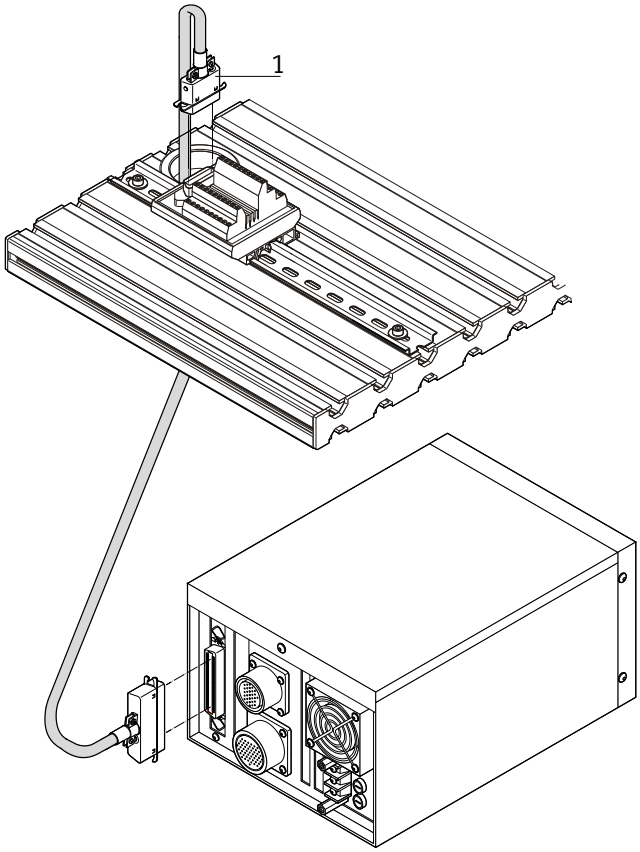

© Festo Didactic GmbH & Co. KG • 648814

- **Robot – solenoid valve**
  The two solenoid coils are to be connected via the cables to the terminals GR1 and GR2 at the rear side of the controller.

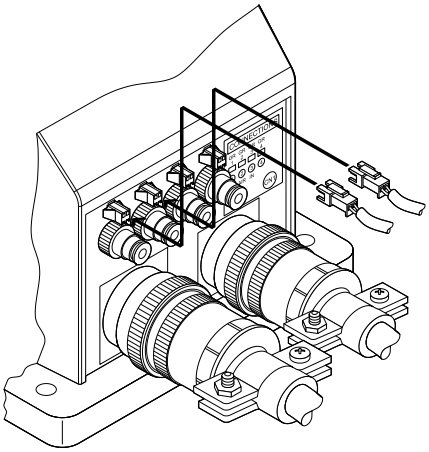

6.6 Pneumatic connection

- Observe technical data!

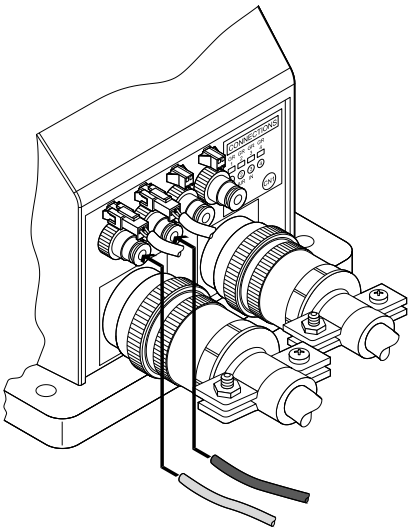

- Tube up solenoid valve, robot and pneumatic gripper.
- Connect the compressed air supply to the start-up valve with filter-control valve.
- Set the start-up valve with filter-control valve at 6 bar (600 kPa).

6.6.1 Manual override

The manual override is used to check the functioning and operation of the valves and valve-drive unit combination.

Prerequisite
- Compressed air supply switched on.
- Power supply unit switched on.

Execution
1. Switch on the compressed air supply.
2. Press down the stem of the manual override with a blunt pencil or a srewdriver. (max. width of blade:2,5mm)
3. Release the stem (the spring resets the stem of the manual override back to the starting position), the valve moves back to the starting position. (not with double solenoid valves!)
4. For locking manual override usage: Controll all manual overrides for being in starting position after testing the valves.
5. Before commissioning the station make sure that all valves of the valve terminal are in starting position.

Documents
- Operating instructions
  CPV valve terminal (165200)

6.7 Voltage supply

- The stations are supplied with 24 V DC voltage (max. 5 A) via a power supply unit.
- The voltage supply of the complete station is effected via a cable with 4 mm safety plugs.

© Festo Didactic GmbH & Co. KG • 648814

6.8 Commissioning the robot system

Details on commissioning of the robot system please find in chapter 2.3 of the Instruction manual for the MELFA Industrial Robot RV-1A/RV-2AJ from Mitsubishi Electric, Art.-No.: 132308, Status 20010522 , BFP-A8052-C.

Proceed the following step:

- Setting the origin

6.9 Loading the robot program

- Robot controller: MELFA CR1
- Programming software: Cosirop, Cosimir Industrial, Cosimir Professional

1. Connect PC and robot controller using the programming cable
2. Switch on the robot controller
3. Switch on the power supply unit
4. Switch on the compressed air supply
5. Release the EMERGENCY-STOP switch
6. Start the robot programming software
7. 4 different programs are available:
   - 3.mb4: with orientation
   - 4.mb4: without orientation
   - 5.mb4: without orientation, without position variables
   - 6.mb4: without orientation, position variables and subroutines

   Select a program and load the file
8. Turn the MODE switch at the robot controller to position AUTO (Ext)
9. Compile the program
10. Download the program and the position list to the robot controller

6.10 Teaching positions

For teaching the positions proceed as follows:

1. Switch on the robot controller.
2. Release the EMERGENCY-STOP switch
3. Acknowledge errors by actuating the RESET pushbutton at the controller or by actuating the ERROR RESET pushbutton at the T/B.
4. Turn the MODE switch at the robot controller to position TEACH.
5. Turn the changeover switch at the T/B in the ENABLE position.
6. Actuation of the MENU pushbutton displays the menu start screen.
   Select 1) TEACH by actuating the INP/EXE pushbutton.
7. Enter the number of the program (3, 4, 5, or 6). Actuate the INP/EXE pushbutton.
8. Actuate the POS pushbutton. Select a specific position by actuating the +/FORWD or –/BACKWD pushbuttons.
   Select a position P1, P2, P3, P4, P5, and P99.
9. Reduce robot arm speed by actuating the –/BACKWD pushbutton
10. Press the Deadman switch and the STEP/MOVE pushbutton: When the servo motors are switched ON actuate the INP/EXE pushbutton: the robot arm moves to the selected position.
    Be careful and avoid collisions!
11. Check the position. If the position is ok, go to step 8 and check the next position.
    If the position is not correct proceed with step 12.

12. Press the Deadman switch at the rear side of the T/B.
13. Select a coordinate system, e.g. XYZ.
14. Actuate the STEP/MOVE pushbutton and move the robot via actuation of the –X, +X, –Y, +Y, –Z,+Z, –A, +A, –B, and +B pushbuttons.
15. When the correct position is approached, press the ADD pushbutton twice. The actual position is transferred to the position list.
16. Return to step 8. Please check the next position.

Note

Actuating the HAND and –C pushbuttons or the HAND and +C pushbuttons respectively closes or opens the gripper.

© Festo Didactic GmbH & Co. KG • 648814

6.10.1 Position P99: Initial position

1. The gripper is in a position, where no collisions with other components of the station are possible.
2. No axis of the robot arm is near an end stop.
3. The two triangles at the hand installation flange and at the gripper adapter are aligned (piston-/spring gripper faces towards the cable ducts).
   The value of axis A should read 0°.
   The value of axis B should read 180°.
4. Store the position.

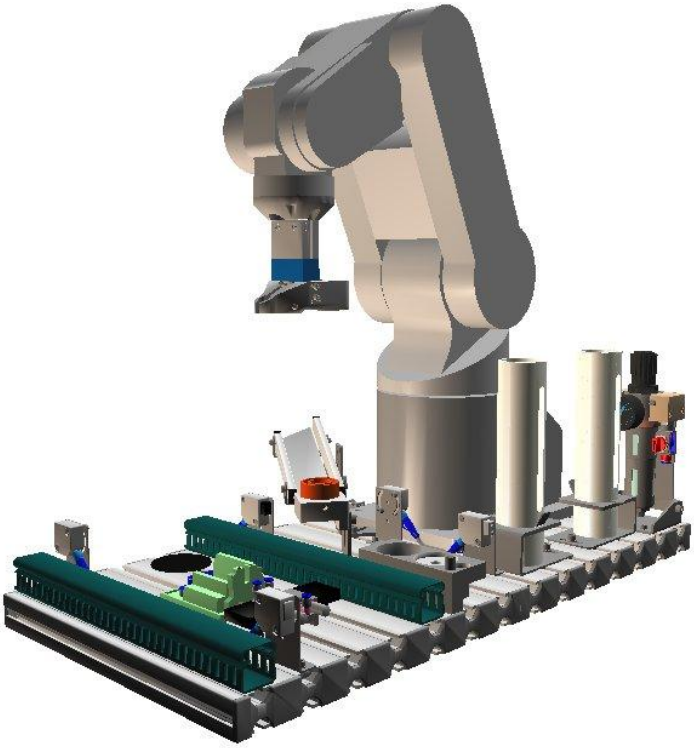

6.10.2 Position P1: Pick up red workpiece

1. The robot is in initial position.
2. Turn the gripper, that the gripper jaws are parallel to the slide.
   The outer gripper faces towards the retainer.
3. Put a red workpiece into the retainer.
4. Move the gripper to the pick up position. When the gripper is closed, the workpiece is picked up firmly by the outer gripper.
5. Store the position.

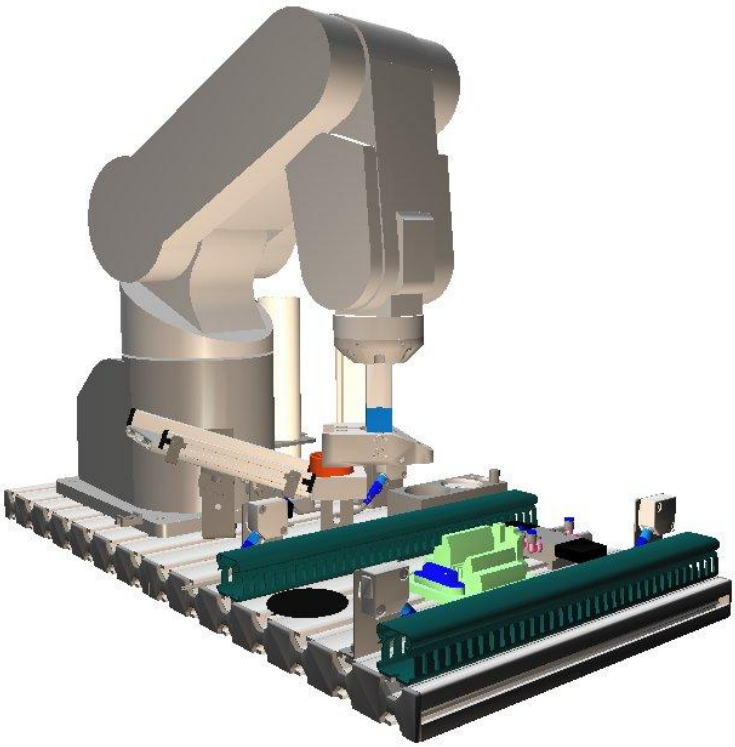

© Festo Didactic GmbH & Co. KG • 648814

6.10.3 Position P2: Reference point at the Assembly retainer module

1. The robot is in initial position.
2. The mandrel is picked up by the middle gripper.
3. Move the gripper until the elastic tip of the mandrel is approaching the reference point of the Assembly retainer module and the mandrel is even with the surface of the Assembly retainer module.

   Notes
   Reduce the speed of the robot while approaching the reference point!

   The value of axis A should read 0°.
   The value of axis B should read 180°.

4. Store the position.

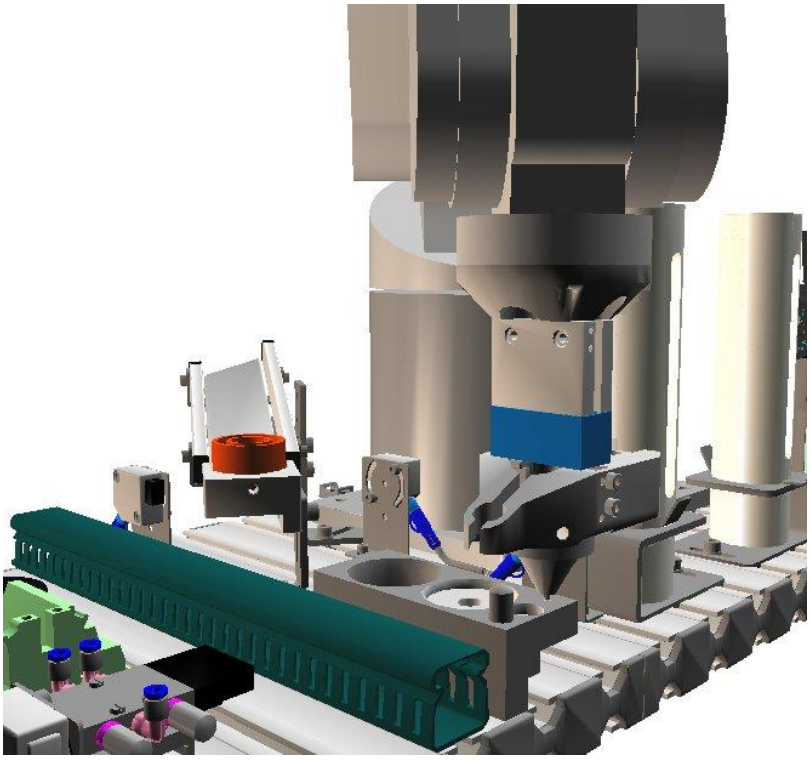

6.10.4 Position P3: Identification (colour of workpiece)

1. The robot is initial position.
2. Put a red workpiece at the “Change gripping” position of the Assembly retainer module.
3. Move the gripper until the optical sensor for colour detection at the gripper jaw points to the center of the workpiece. The distance between sensor head and workpiece is approx. 1 cm.

   Note
   Red and metallic workpieces should be detected, the black workpiece not. If necessary, change sensitivity of the fibre optic device!

4. Store the position.

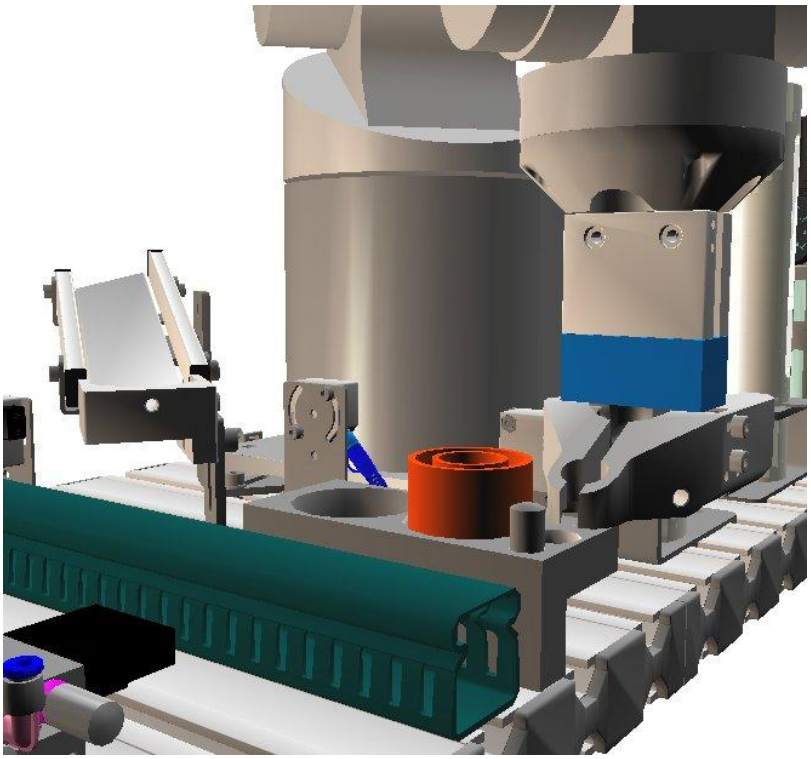

© Festo Didactic GmbH & Co. KG • 648814

6.10.5 Position 4: Deposit position red/metallic workpiece

1. The robot is in initial position.
2. A red workpiece is picked up with the outer gripper.
3. Move the gripper until the workpiece will be deposited into the Magazine module.
4. Store the position.

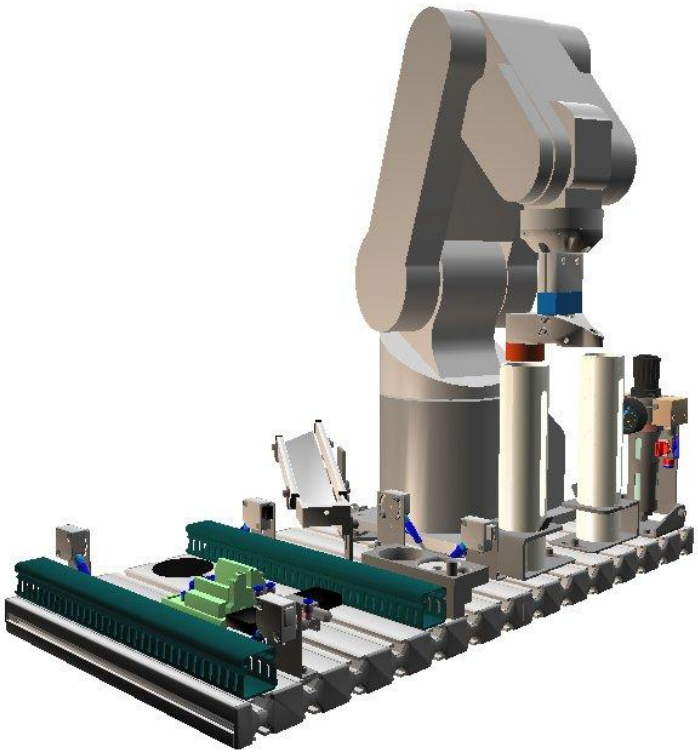

Note
If the robot station is used in combination with the Assembly station and/or the Punching station, please follow the instructions in the manuals of these stations for modified teaching positions.

6.10.6 Position P5: Deposit position black workpiece

1. The robot is in initial position.
2. A red workpiece is picked up with the outer gripper.
3. Move the gripper until the workpiece will be deposited into the Magazine module.
4. Store the position.

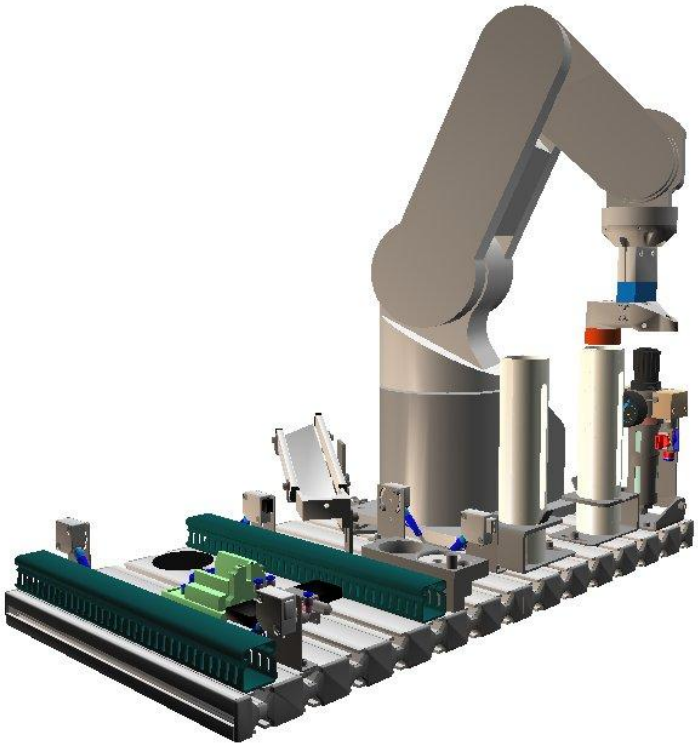

Note
If the robot station is used in combination with the Assembly station and/or the Punching station, please follow the instructions in the manuals of these stations for modified teaching positions.

© Festo Didactic GmbH & Co. KG • 648814

6.11 Starting the sequence

1. Check the voltage supply and compressed air supply.
2. Remove the workpieces at the transfer points of modules or stations prior to manual reset.
3. The robot is in initial position.
4. Feed a workpiece via the slide to the retainer module.
5. Start the sequence of the Robot station:
   Turn the MODE switch of the robot controller to position AUTO (Op).
   Select the program menu display by pressing the CHANG.DISP pushbutton.
   Using the UP and DOWN pushbuttons select the correct program number.
   Switch on the servo power by actuating the SVO ON pushbutton.
   Actuate the START pushbutton of the robot controller.

Notes

- The sequence can be stopped at any time by pressing the EMERGENCY-STOP pushbutton or the STOP pushbutton.
- In the case of a combination of stations the following applies:
  The individual stations are reset against the material flow.

6.12 Combination of stations

6.12.1 Networking

In the standard version, the MPS® stations are linked using optical sensors. This type of linking is known as StationLink, which uses through-beam sensor transmitters and receivers as sensors. The StationLink transmitter is mounted on the incoming material side and the StationLink receiver on the outgoing material side. By switching on or off the StationLink transmitter, the station signals the upstream station whether it is ready to receive a workpiece or busy.

The sensors for linking several stations must be arranged face to face in alignment. The linked stations must be securely interconnected by means of hammer head screws.

Note
In the case of the Distributing station, only the StationLink receiver is mounted and on the Sorting station only the StationLink transmitter.

© Festo Didactic GmbH & Co. KG • 648814

7. Maintenance

The following should be cleaned at regular intervals using a soft fluff-free cloth or brush:

- The lenses of the optical sensors, the fibre-optics and reflectors
- The entire station

Do not use aggressive or abrasive cleaning agents.

7.1 Replacement of batteries

The Robot station should be maintained at regular intervals.

The batteries of the controller and the robot arm should be replaced annually.

(The robot arm uses a backup battery to save the encoder position data when the power is turned off. The controller also uses a backup battery to save the program,etc. When the battey life nears, the “Battery cumulative time over alarm (Alarm No.7520)” will occur. Once the alarm occurs, all batteries in the robot arm and the controller should be replaced as soon as possible to avoid data loss.

Obey the manual describtions!
(BFP-A8052-D, p 5-45 pp and BFP-A8054-G, p 5-52 pp)

© Festo Didactic GmbH & Co. KG • 648814

Updates

Up-to-date information and additional documents for the Technical documentation of the MPS® stations please find at the address:

http://www.festo-didactic.de/Services › MPS

© Festo Didactic GmbH & Co. KG • 648814